MITSUBISHI ELECTRIC

Changes for the Better

for a greener tomorrow

ELECTROMAGNETIC CLUTCHES AND BRAKES
<Powder type·Hysteresis type>
TENSION CONTROLLERS

Tension Control Guidance

Tension Control Guidance

CONTENTS

Chapter.1

Outline of Tension Control

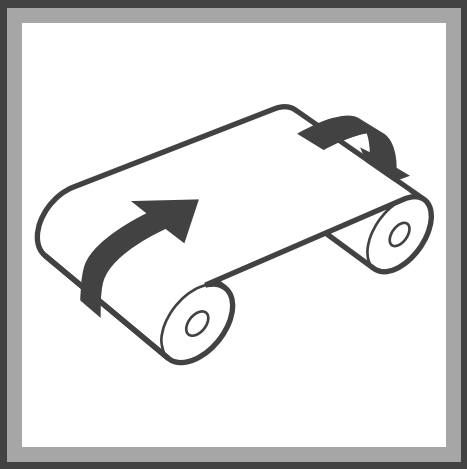

Chapter 1

Outline of Tension Control

1-1 What is tension control?

Various processing including printing, coating and slitting is applied on long materials such as paper and films using the role-to-roll type control.
For achieving stable processing, it is important to control the material tension properly and accurately.

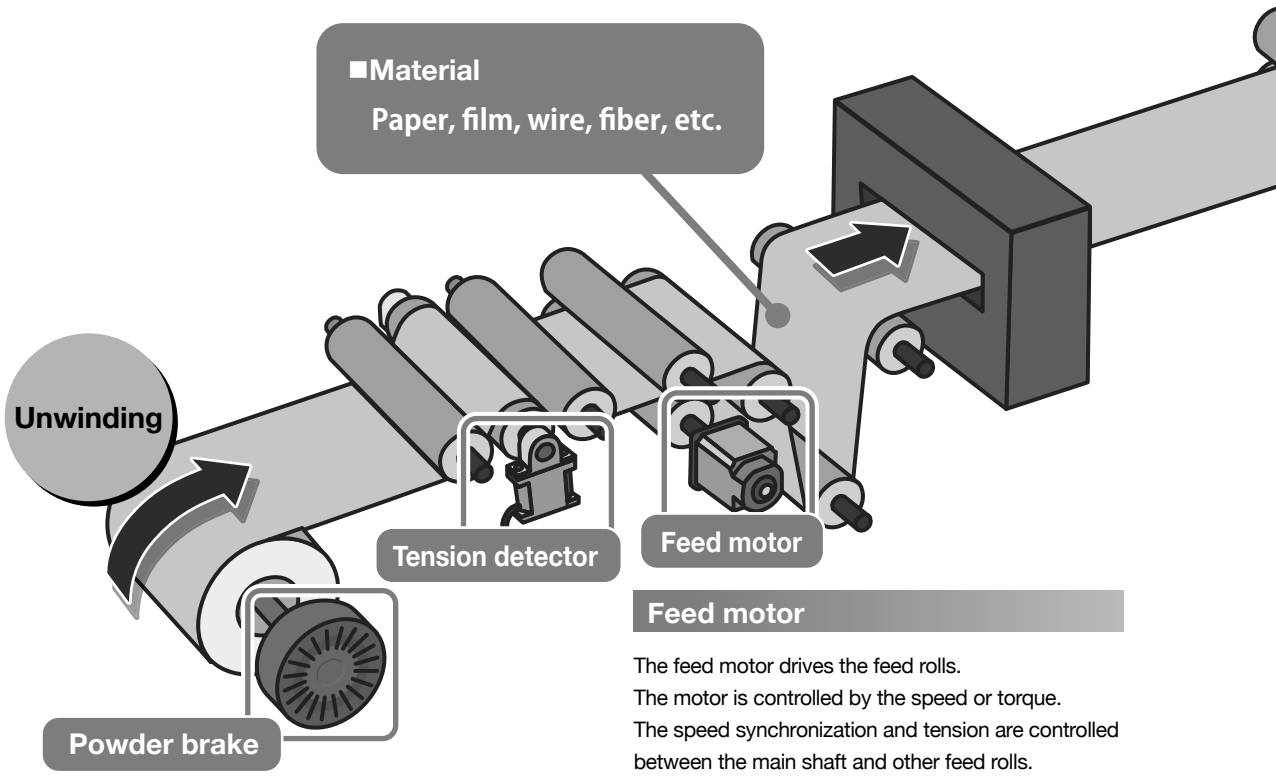

Feed motor

The feed motor drives the feed rolls.
The motor is controlled by the speed or torque.
The speed synchronization and tension are controlled between the main shaft and other feed rolls.

Unwinding section

The unwinding tension is determined by the brake torque of the powder brake installed in the unwinding section.
For keeping the tension constant, it is necessary to decrease the brake torque in accordance with decrease of the reel diameter.

Equipment required for tension control


Powder clutch


Powder brake

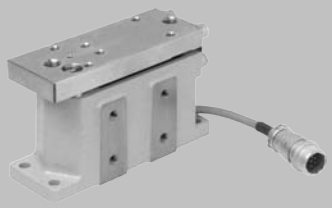
Tension detector


Tension controller

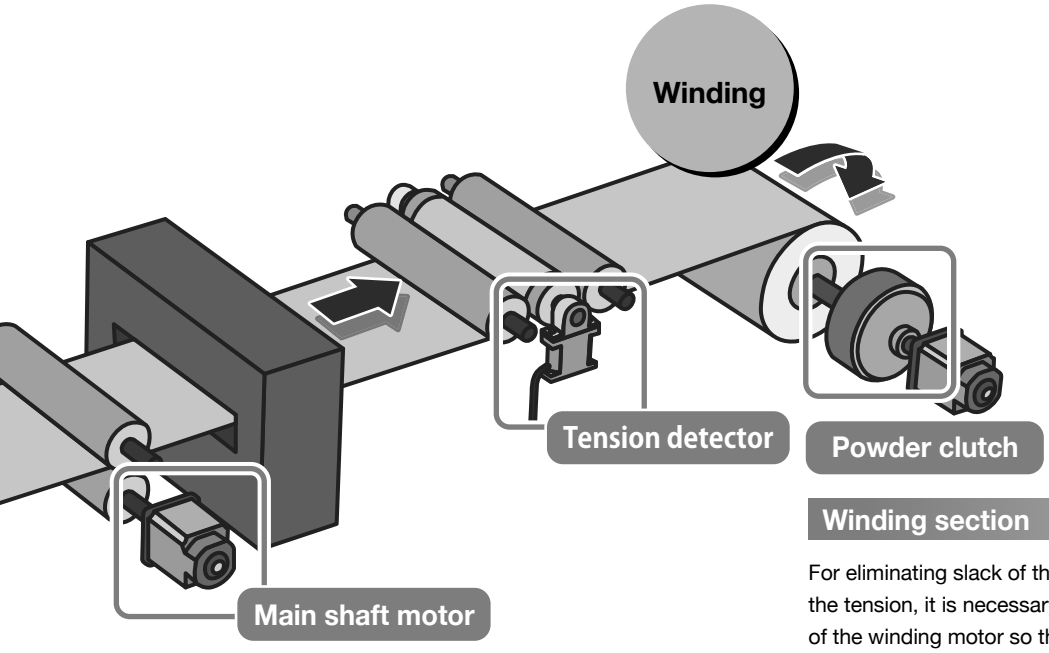

Main shaft motor

The main shaft motor drives the main shaft to feed the long material from the left to the right.
The feed speed (line speed) is determined by the motor speed, which is not related to the tension.
However, a motor enabling large output is required when the tension is high.

Winding section

For eliminating slack of the material and generating the tension, it is necessary to set the rotation speed of the winding motor so that the rotation speed input to the powder clutch is always higher than the rotation speed of the reel shaft. As a result, the rotation speed is different between the input side and the output side of the powder clutch, and then slip is generated in the powder clutch.
For keeping the tension constant, it is necessary to increase the torque of the powder clutch as the reel diameter becomes larger.

Advantages of tension control

Accurate ··· Improving the processing accuracy

High speed ··· Improving the time efficiency

No waste ··· Improving the material efficiency


AC servo motor


Inverter


Vector control motor


Geared motor

1-2 Tension control is used in the following places

● Making materials

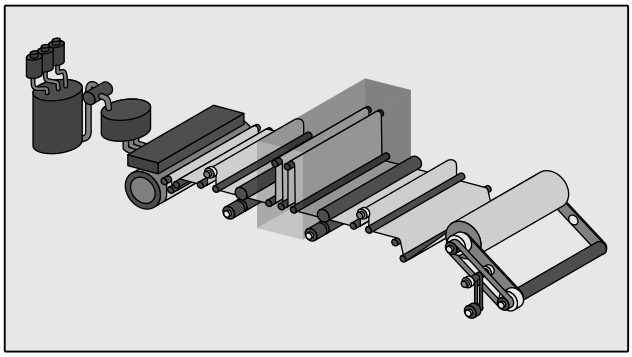

Films, paper, foils, wires and fibers

● Processing

Printing

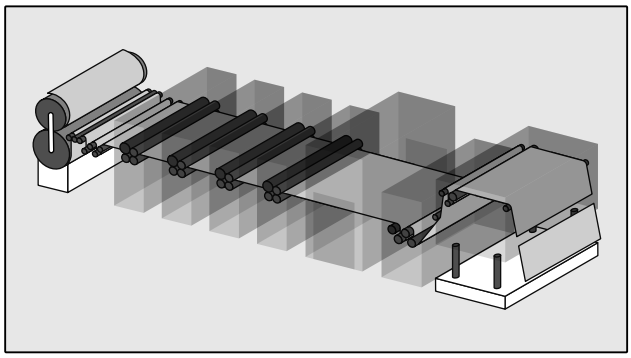

Slitting

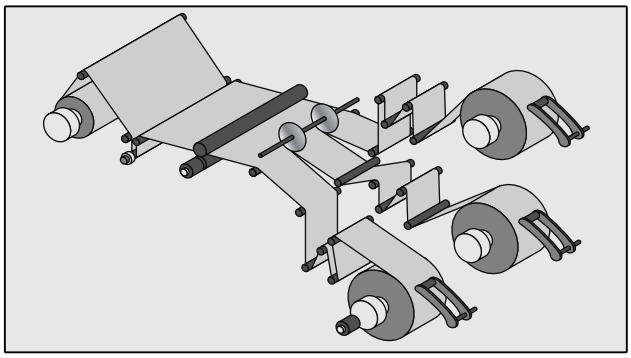

Coating

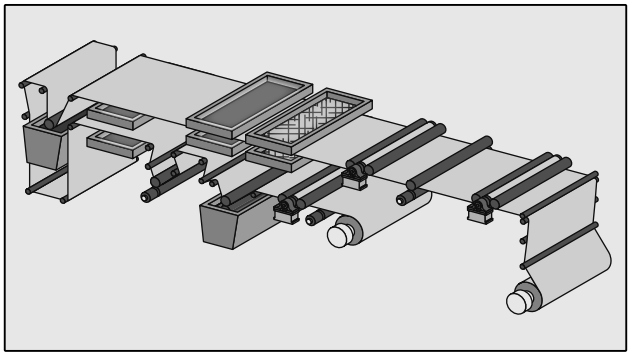

Laminating

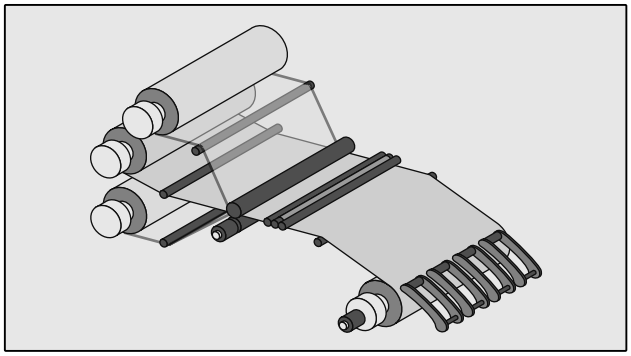

● Inspection

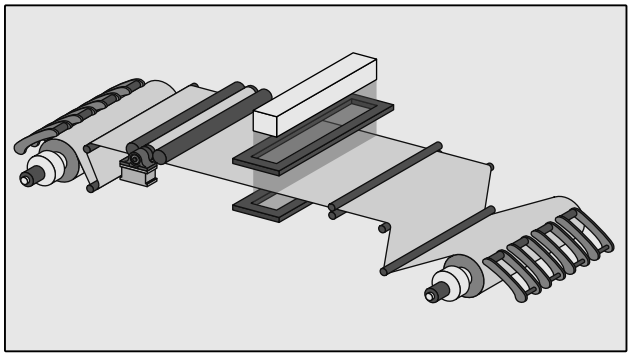

Quality control

1-3 Products to which tension control is applied

Paper	Plastic sheets	Films	Laminated products
Aluminum foils	Copper foils	Metallic foils	Wires
Electronic devices	Optical films	High-tech fibers	

● **Plastic shopping bag manufacturing process**

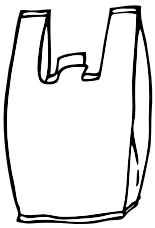

Plastic shopping bags (for supermarkets) and garbage bags are manufactured by the inflatable extruder.
Heated and melted material such as polyethylene and polypropylene is extruded into a cylindrical shape by air blow. The extruded cylindrical material is cooled, made flat when air is discharged from the cavity, shaped into a bag-shaped sheet, and then wound.

● **If the tension of the material (paper, film, etc.) is low**

If the tension of the material (paper, film, etc.) is low, the material may become slack or get wrinkles during printing.
If the tension is too high, the material may shrink after printing.
If the tension is unstable, color shift may occur during printing.

1-4 Example: Snack food bag manufacturing process

This section explains various industrial machines adopting tension control while picking up the snack food bag manufacturing process as an example.

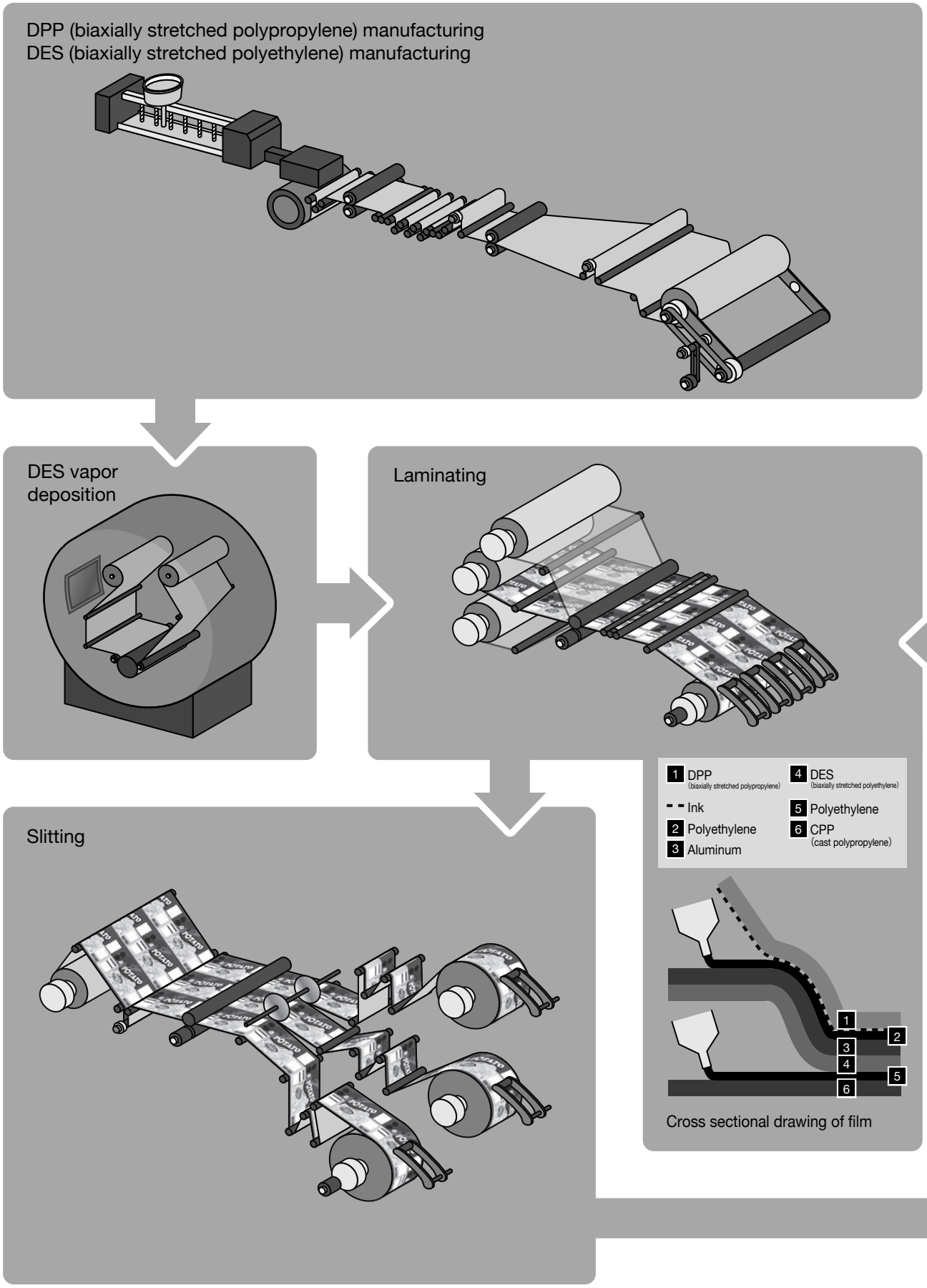

Snack food bags are manufactured using the tension control technology.
These bags consist of 6 layers including the aluminum layer to shield snack food against ultraviolet rays, oxygen, moisture, oil, etc. (for assuring the preservability and safety), and keep the flavor.

Printing on polypropylene

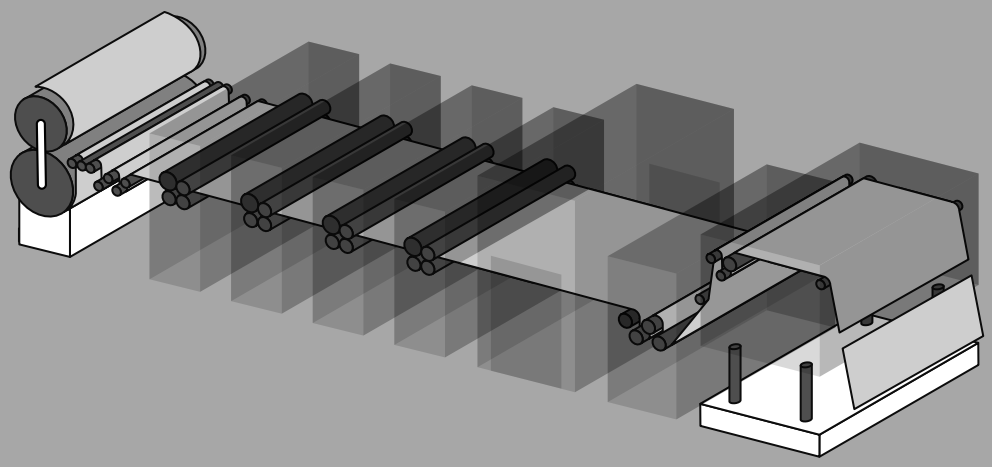

Printing on CPP (cast polypropylene)

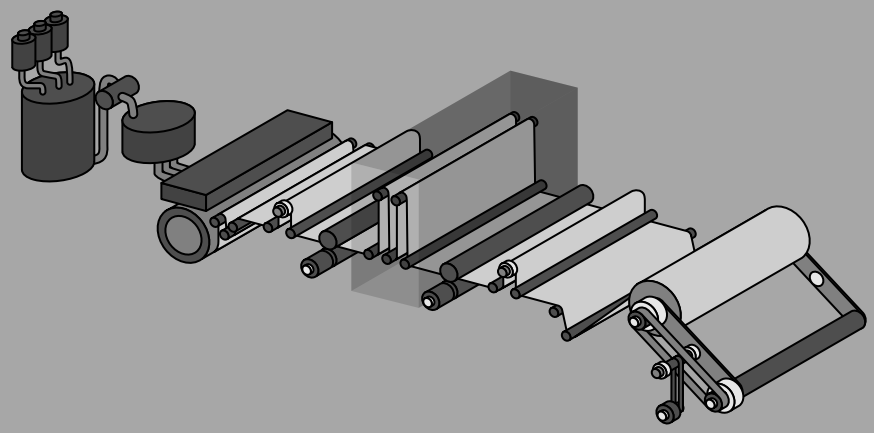

Bag making

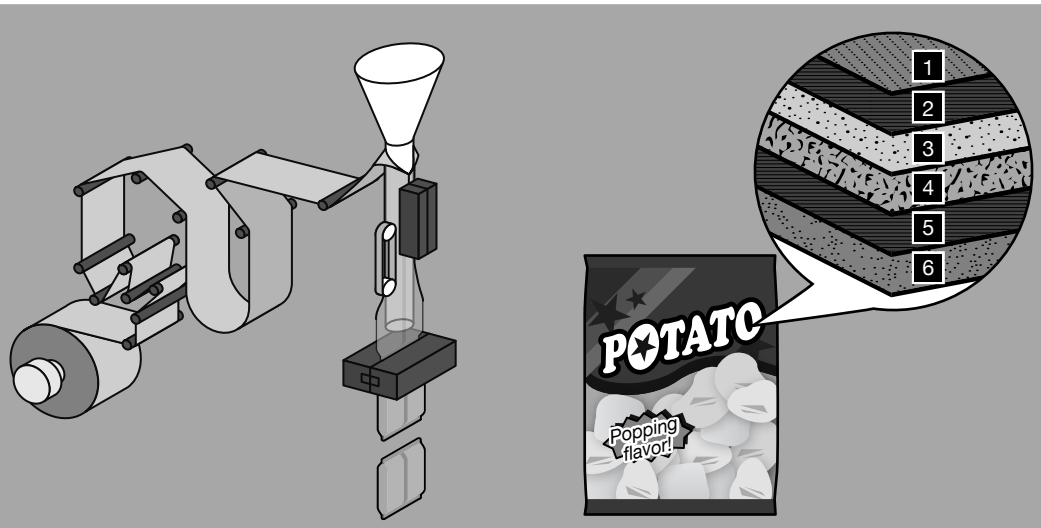

1-5 Let's look for tension control around you

Aircraft

● For example …

Carbon fibers are attracting attention from the viewpoint of improving the fuel efficiency, improving the cruising range and reducing carbon dioxide emissions. The tension control technology is used also in generating carbon fibers and processing molded products containing carbon fibers.

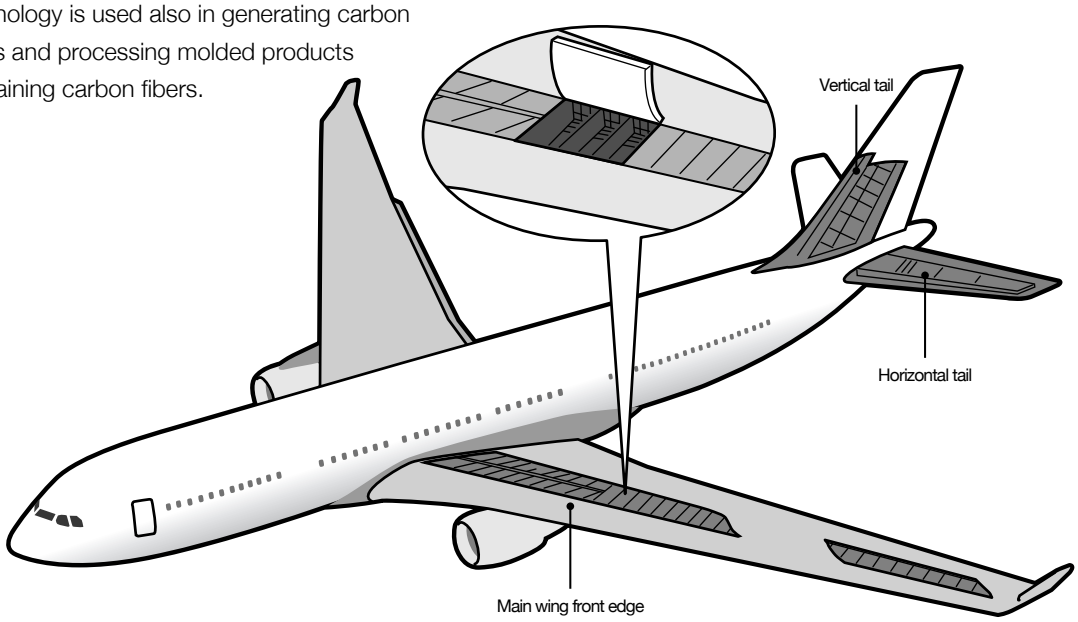

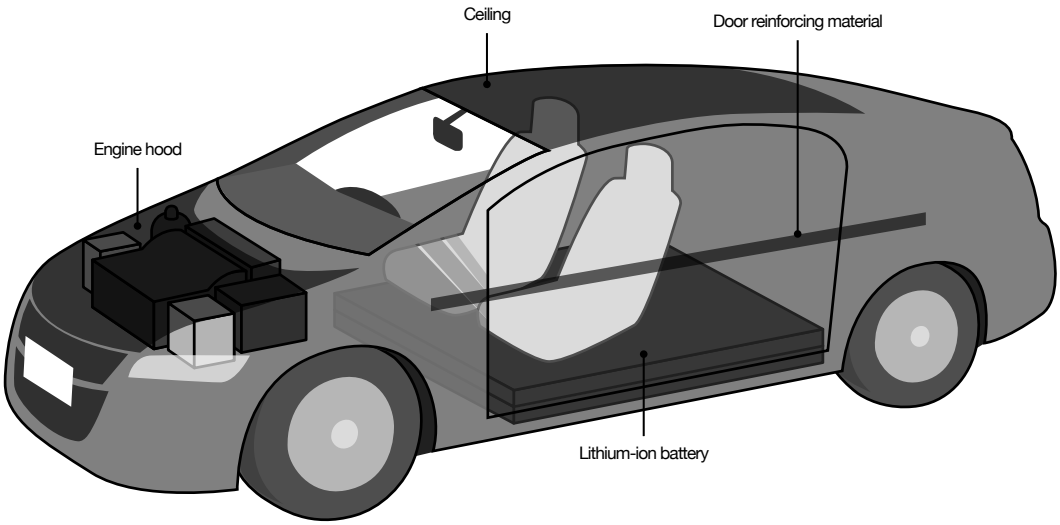

Automobile part

● For example …

For the same purposes with aircrafts, the tension control technology is used in processing molded products containing carbon fibers and manufacturing lithium-ion batteries for hybrid cars and electric vehicles.

Ceramic capacitors

● For example …

Electronic circuits are built in mobile phones, and they are mounted on PC Boards.
Among electronic components, cubic components of 1 to 2 mm called ceramic capacitors are manufactured using the tension control technology.

Polarizing plates and protective materials

● For example …

In liquid crystal televisions, the tension control technology is used in the high-function sheet for liquid crystal, film capacitors and others.

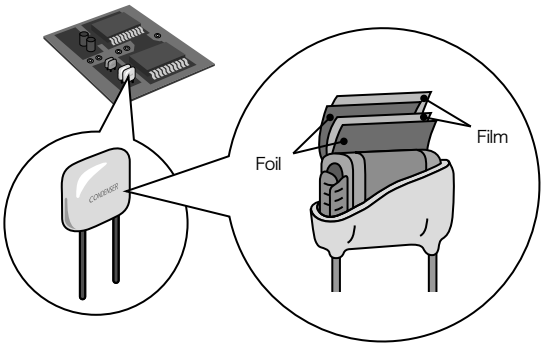

1-6 Effect of introducing tension control

● If tension control is not applied

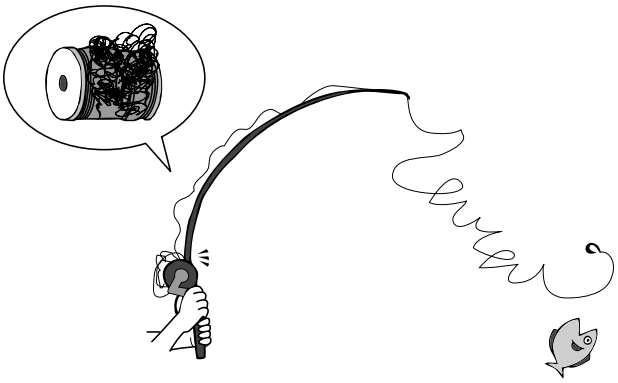

As winding without tension control, imagine the shape of a toilet paper roll unwound and wound by hand and the shape of the fishing reel wound without the weight.
You may easily imagine shapes not wound neatly.

■ 1-6-1 Improving the wound shape

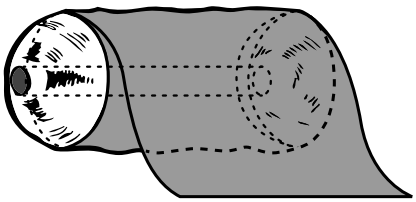

In the material processing and winding stages, satisfactory wound shape can be achieved with tension control.
If tension control is not performed properly, the following nonconformities may occur:

- Chrysanthemum pattern:
  The center is crushed due to tight winding.
- Dented roll:
  The center is dented after winding.
- Arc-shaped curve and bamboo shape:
  The material slips out of place during winding.
- Shoulder-lacked roll:
  Both sides are lacked during winding.

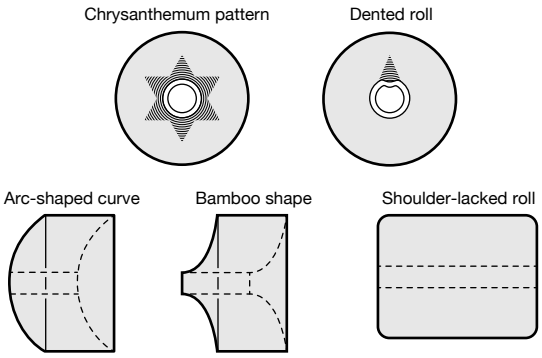

■ 1-6-2 Improving the printing quality

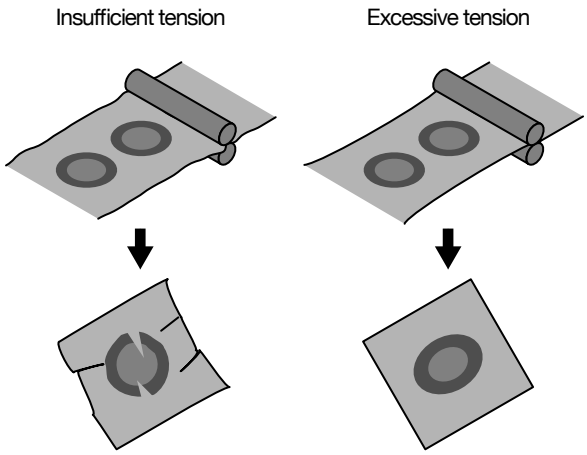

If the tension is insufficient, wrinkles are present on the material surface during printing, and the printing pattern may be discontinued.
If the tension is excessive, the material is stretched too much during printing. When the tension is lost after printing, the material may shrink and the printed pattern may be deformed.
Keeping a proper tension achieves neatly finished multicolor printing.
If the tension is not constant or fluctuates in each printing unit, colors may overflow or bleed, and the printed pattern may be deformed.

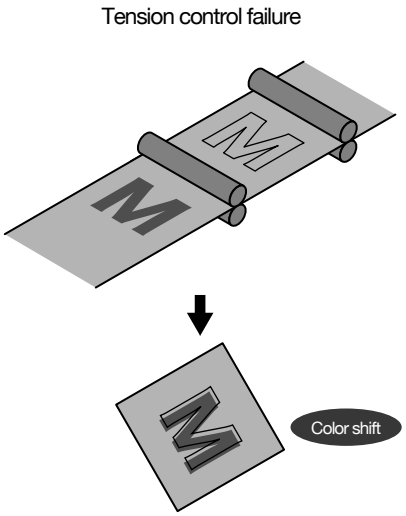

■ 1-6-3 Improving the processing quality in the slitter

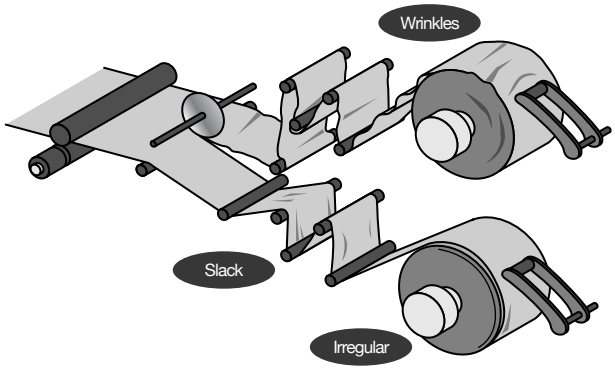

Tension control only in each winding reel shaft is not sufficient.
If the tension is not equivalent between the upper area and the lower area, the width may be uneven, and wrinkles and slack may be generated.

■ 1-6-4 Improving the processing quality in the laminator

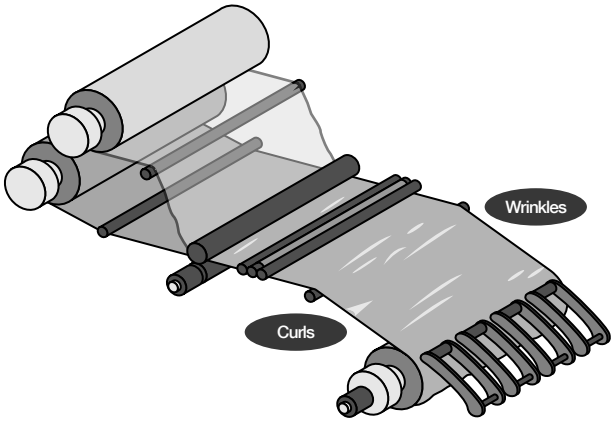

If the tension is not controlled properly between the upper area and the lower area, wrinkles and curls may be generated due to elongation and shrinkage of the material.

■ 1-6-5 Improving the processing quality in the coater

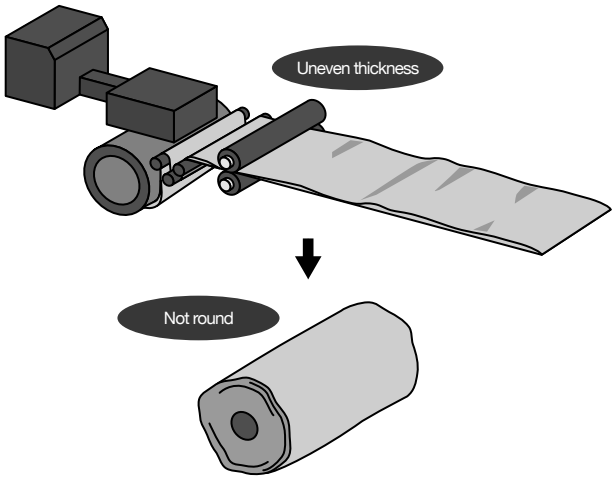

If the tension is uneven between before coating and after coating, the material thickness may be uneven, and the product quality may be deteriorated.

Important point!

Why is tension control required?

The purpose of tension control varies depending on the material and machine.
When the tension is controlled properly, the material can be transferred to the next process (such as printing, laminating and machining) with proper tension, which leads to stabilizing the material travel, securing the dimensional accuracy and achieving satisfactory wound status.

Chapter.2

Basis of Tension Control

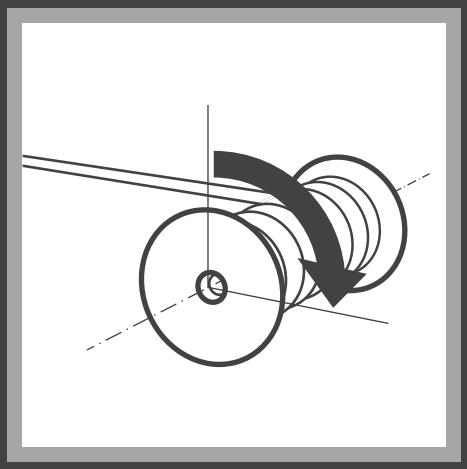

Chapter 2 Basis of Tension Control

2-1 What is tension?

Various physical phenomena occur in machines which process long materials.
However, it is rather difficult to link them with phenomena which occur around us.

● Pulling force and pulled force

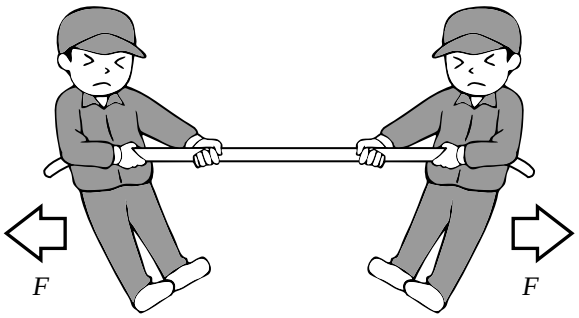

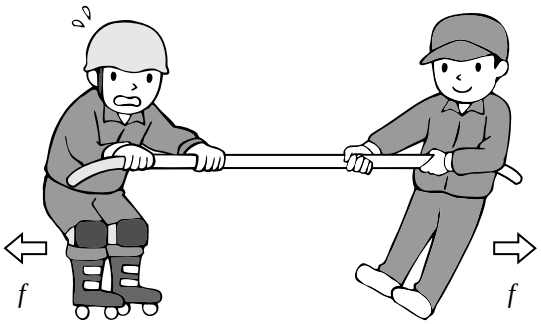

When two people are pulling a rope each other, tension is applied on the rope.
It is easy to understand that the pulling force (F) and pulled force (F) balance each other and same tension is applied on the both people while the rope is stopped.
How much is the tension when the rope is moving?
If one side is not fixed, the rope moves rightward. A force (f) weaker than before is applied on the rope.
It means that the tension is not determined by the force on the pulling side when the rope is moving. The tension is affected by the force on the pulled side.

2-2 What is torque?

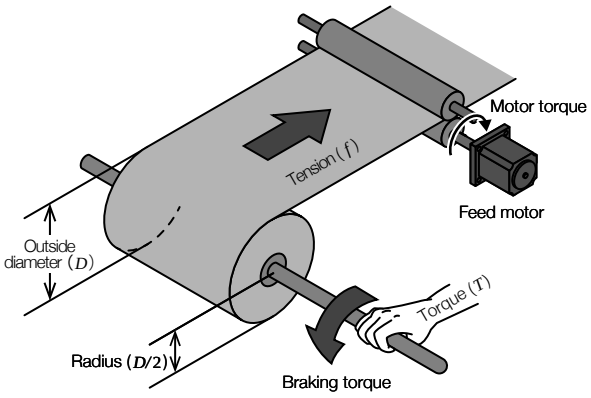

The left figure shows the relationship between the tension and the torque when a long material is fed out. The term "torque" refers to the force applied on the rotary shaft.

When a long material is fed out, it is fed rightward because the braking torque of the reel shaft is weaker than the motor torque.
In this case, the tension (f) applied on the material is determined by the braking torque (T) on the weaker side.
The expression below shows the relationship between the torque (T) and the tension (f) at that time:

$$\text{Tension } (f) = \frac{\text{Torque } (T)}{\text{Radius } (D/2)}$$

2-3 Forces giving effect to the tension

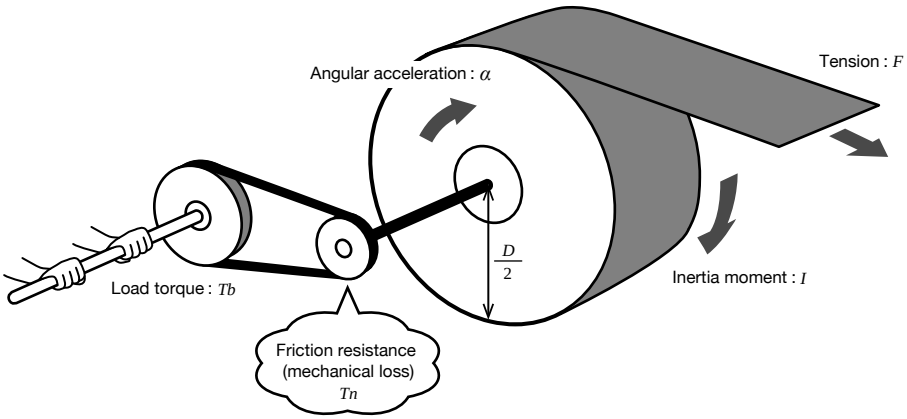

Next, let's consider an example of forces which give effect to the tension in actual machines.
Which forces work when a long material is fed out?
Major forces are as follows:

- ◆ Tension generated by pulling: F
- ◆ Inertia moment: I
- ◆ Angular acceleration: α
- ◆ Torque generated when the angular acceleration changes during acceleration/deceleration: $I \times \alpha$
- ◆ Friction resistance generated by friction of the shaft: Tn
- ◆ Load torque: Tb (corresponding to the braking torque)

The motion equation below shows the rotational motion:

$$F \times \frac{D}{2} = I \times \alpha + Tn + Tb$$

Tension | Radius | Inertia moment | Angular acceleration | Friction resistance | Load torque

"$I \times \alpha$" is generated when the angular acceleration changes during acceleration or deceleration, and gives no effect when the speed is constant.
The friction resistance "Tn" is caused by friction resistance (mechanical loss) generated when the bearing which supports the shaft, gear or belt is driven.
"Tn" changes in accordance with the temperature and rotation speed. The bearing changes in accordance with the gap accuracy and seal type, and its value is not constant.
"Tb" is the load torque generated by the brake, etc.
For controlling the tension, it is necessary to control these three torques properly.

■ 2-3-1 Inertia moment

The inertia moment is an index which expresses the difficulty of rotating in the rotating body.
The mass in linear motion indicates the "difficulty of moving" and "difficulty of stopping" when a force is applied.
The inertia moment in rotational motion indicates the "difficulty of rotating" and "difficulty of stopping" when a force to make rotation is applied.
With regard to the reel shaft, for example, it is difficult to start rotating a reel shaft of large outside diameter or large mass, but such a reel shaft has a property to rotate continuously once it starts rotating. This property is referred to as "The inertia moment is large."
The expression below shows the property:

Inertia moment = Σ[(Distance from center of rotation) × (Mass)]

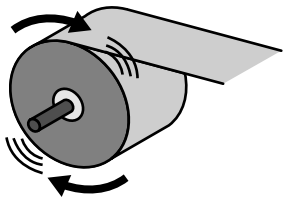

The inertia moment is small.

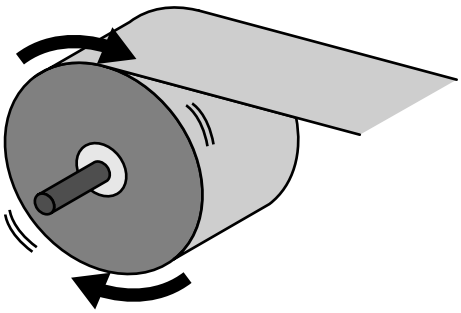

The inertia moment is large.

It is necessary to consider the inertia when accelerating or decelerating the rotating body. The torque "T" required for accelerating the rotating body whose inertia is "I" is as follows:

$$T = I \times \alpha$$

Accordingly, it is necessary to consider that the torque appears as the tension on the + side (pulling side) when accelerating the rotating body by pulling it, and appears as the tension on the - side (slacking side) when decelerating the rotating body.
The torque is not generated during steady operation at a constant speed because the angular acceleration " α " is 0.

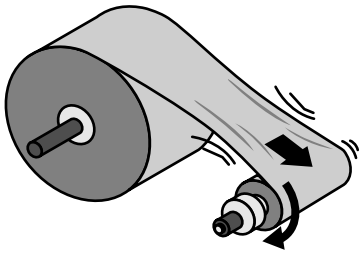

Accelerated

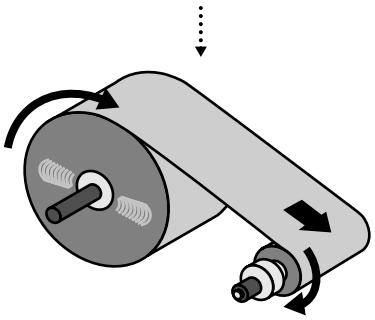

Constant speed

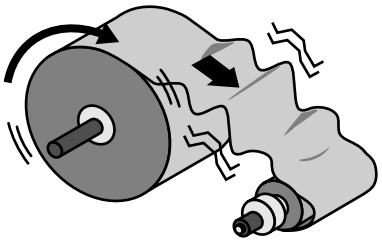

Decelerated

■ 2-3-2 Force generated by the friction resistance (mechanical loss)

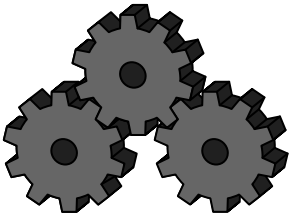

Gear

Bearing

When the shaft rotates, friction resistance is generated in the bearing which supports the shaft, gear, pulley, etc.
The friction resistance also gives effect to the tension.
Because the effect of the friction resistance cannot be ignored when controlling low tension, proper measures are required.

Important point!

Let's understand the basic concepts of tension, torque, inertia moment and friction resistance (mechanical loss)!

MEMO

Chapter.3

Torque Control and Speed Control

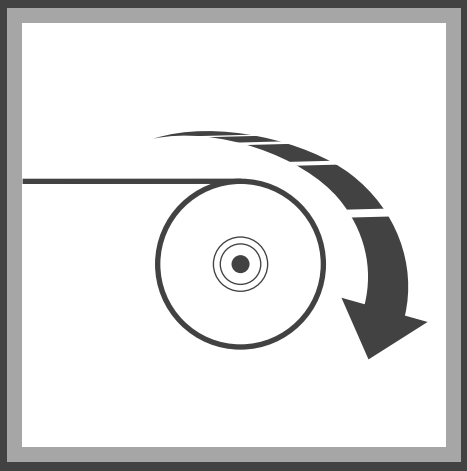

Chapter 3 Torque Control and Speed Control

3-1 Torque control and speed control

There are mainly two tension control methods, the method using torque control and the method using speed control.

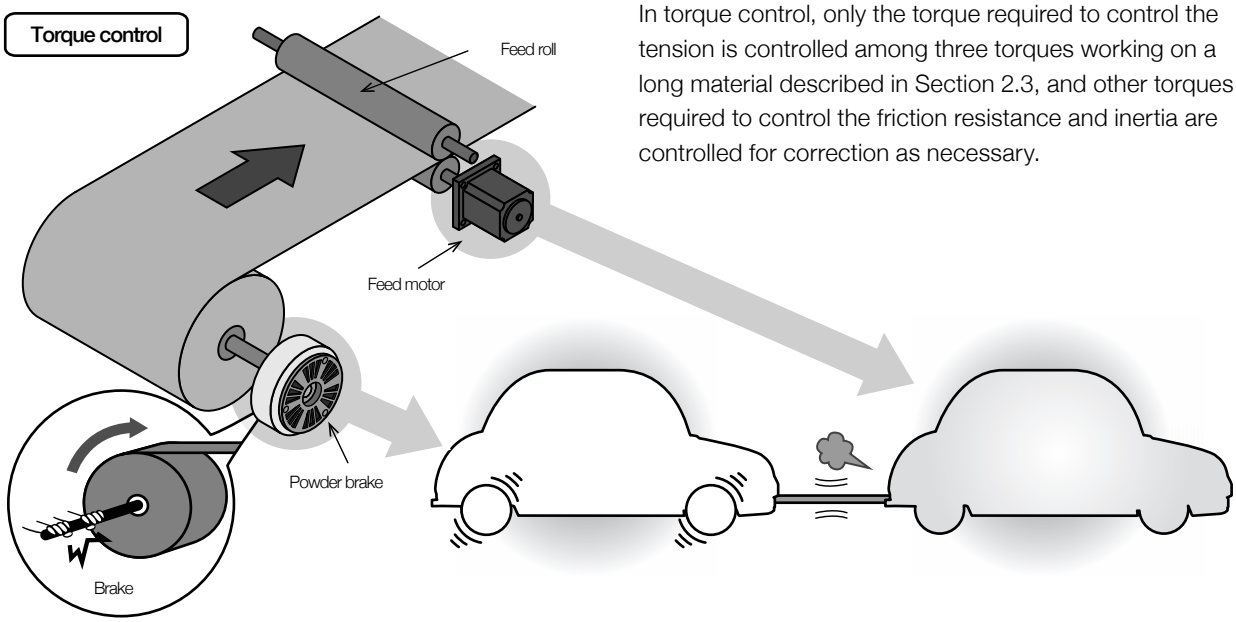

In torque control, only the torque required to control the tension is controlled among three torques working on a long material described in Section 2.3, and other torques required to control the friction resistance and inertia are controlled for correction as necessary.

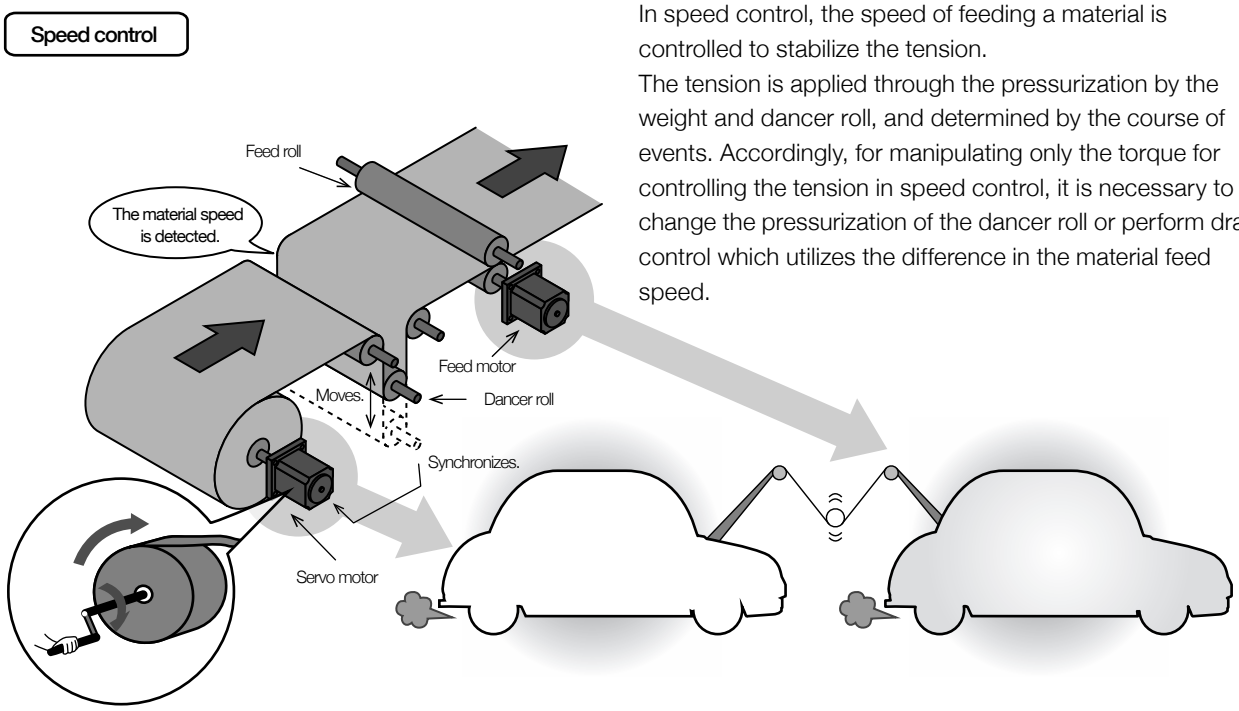

In speed control, the speed of feeding a material is controlled to stabilize the tension.
The tension is applied through the pressurization by the weight and dancer roll, and determined by the course of events. Accordingly, for manipulating only the torque for controlling the tension in speed control, it is necessary to change the pressurization of the dancer roll or perform draw control which utilizes the difference in the material feed speed.

■ 3-1-1 Mechanism of torque control

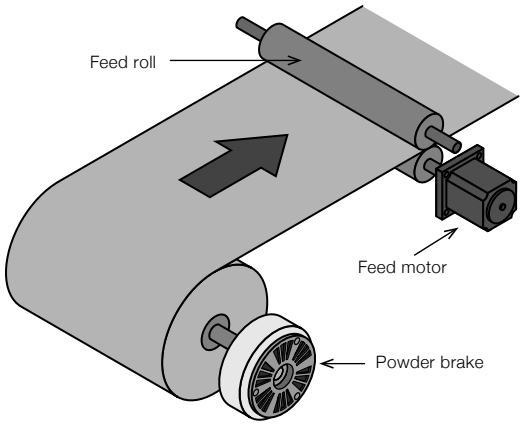

The left figure shows an example of torque control in unwinding. In torque control, the effect of inertia caused by acceleration/deceleration and the friction resistance are almost constant when the material moving speed is constant. Accordingly, the tension can be controlled easily only by giving a constant braking torque.
The rotation speed of the reel shaft is determined by the course of events based on the feed speed and reel diameter (material diameter wound around the reel shaft). By adopting an actuator* which generates a constant torque even if the rotation speed changes, the intended tension can be achieved easily without regard to changes in the rotation speed of the reel shaft only by changing the torque for controlling the tension.

> * An actuator is …
> A driving or controlling mechanism such as clutch, brake and motor installed in the winding reel shaft and unwinding reel shaft

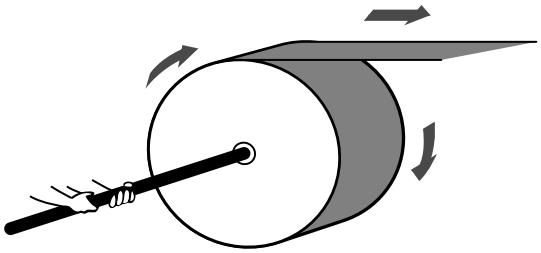

Control is difficult when the inertia is large!

On the other hand, if the effect of the inertia (inertia moment) during acceleration/deceleration and the mechanical friction change considerably in torque control, it is difficult to completely restrict fluctuations of the tension caused by such changes.
As the reel diameter becomes larger, the inertia of the reel becomes larger accordingly, and the torque required for compensating the inertia becomes larger.
Accordingly, torque control is more difficult as the inertia is lager and the acceleration/deceleration speed is higher.

Applicable equipment

Mitsubishi Electric Corporation
Powder clutch
ZKB-BN

Mitsubishi Electric Corporation
Powder brake
ZKB-XN

Mitsubishi Electric Corporation
Hysteresis clutch
ZHA

Mitsubishi Electric Corporation
Hysteresis brake
ZHY

Mitsubishi Electric Corporation
AC servo motor
MELSERVO-J4

Mitsubishi Electric Corporation
Inverter
FREQROL-A800

■ 3-1-2 Mechanism of speed control

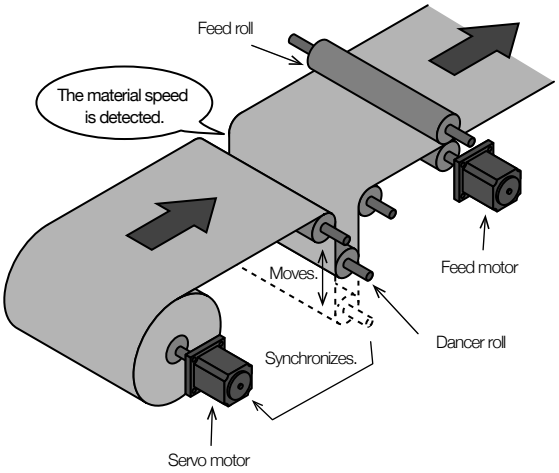

The left figure shows an example of speed control in unwinding.
In actual machines, the rotation speed of the motor which feeds out the material is controlled.
For applying the tension, the weight is hung to the dancer roll* as shown in the left figure or the dancer roll is pressurized by the air cylinder, etc.

> * Dancer roll is …
> Follower roll (guide roll) whose spindle can move longitudinally or laterally.
> The tension of the material is determined by the load applied on the dancer roll spindle.

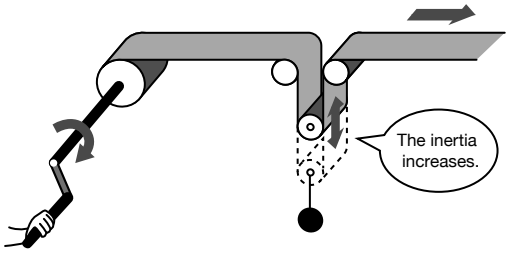

It is difficult to follow motions.

In speed control, the speed of the material moving in the machine is detected, and the machine is controlled so that other driving parts of the machine synchronize with the detected speed. Accordingly, it is easy to stabilize the movement of the material.
In addition, because the torque is determined by the course of events even if the torque caused by inertia and the torque caused by mechanical friction fluctuate, the stability of the material is less deteriorated.
However, because it is not possible to change only the torque for controlling the tension, the tension accuracy is low. In speed control using the dancer roll, the tension is changed by the weight attached to the dancer roll or the pressurization applied on the dancer roll by the air cylinder, etc. If the weight is attached, the inertia of the dancer roll increases. As a result, the response of speed detection becomes low, and the tension may fluctuate in worse cases. If the dancer roll is pressurized by the air cylinder, etc., fluctuations in the air cause fluctuations in the tension. Accordingly, the absolute control accuracy of the tension is lower than that in torque control.

■ Dancer roll

Dancer rolls are rollers which move considerably longitudinally or laterally, and classified into weight dancer roll, spring dancer roll, etc.

● Weight dancer roll

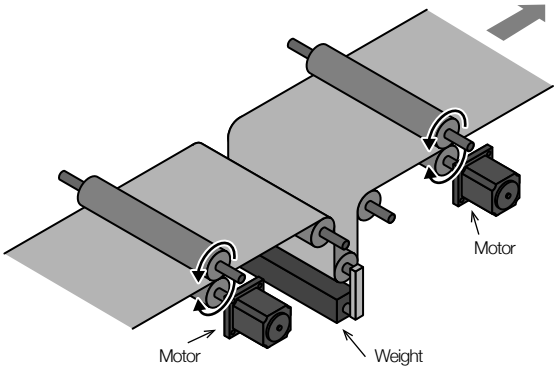

- The tension is 1/2 of the mass of the weight.
- The dancer roll position is not related to the tension.
- The dancer roll position depends on the difference between the input speed and the output speed.
- The material is easily made stable even during acceleration or deceleration.
- Synchronization is achieved easily even if the material between the driving controlled shafts is long.
- It is necessary to change the mass of the weight for changing the tension.

● Spring dancer roll

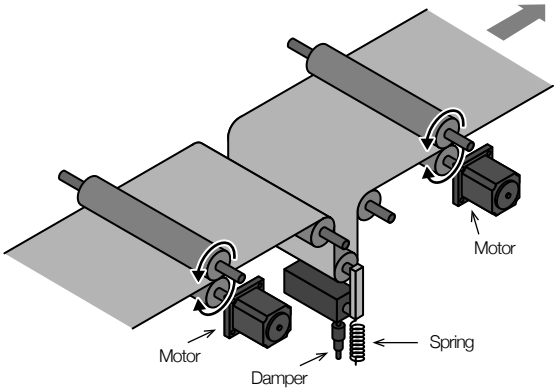

- The spring force of the spring causes the tension.
- The dancer roll position is changed by the tension.
- The dancer roll position is not changed by the difference in speed.
- The tension control accuracy is better compared with the weight dancer roll.
- The dancer roll absorbs shock.
- It is necessary to stabilize the spring (, so the damper is required).

Applicable equipment

Mitsubishi Electric Corporation
AC servo motor
MELSERVO-J4

Mitsubishi Electric Corporation
Inverter (for vector control)
FREQROL-A800

Mitsubishi Electric Corporation
Vector control motor
SF-V5RU

3-2 How to use torque control and speed control properly

	Torque control	Speed control
• Tension accuracy	**Good** The accuracy is determined by the torque generated by the actuator, and detailed control is enabled.	**Bad** The tension is determined by the weight attached to the dancer roll or the pressurization by the air cylinder. It is not possible to change only the torque used for controlling the tension even if the tension changes.
• Availability of acceleration/deceleration • Considerable change in reel diameter • Low tension	**Bad** The control is difficult because it is affected by changes in the torque caused by changes in the inertia. Because the reel shaft can rotate only when it is pulled by a force overcoming the inertia of the reel shaft, the tension lower limit is restricted.	**Good** Because the tension is determined by the weight attached to the dancer roll or the pressurization by the air cylinder even if acceleration or deceleration is performed, the control is less affected by acceleration or deceleration. Because the reel shaft can be driven, the tension can be made low by positively feeding out the material.

Torque control is not applicable to all use conditions. In the same way, speed control is not applicable to all use conditions.
It is necessary to select a proper method in accordance with the actual use condition.
For selecting a proper method, it is necessary to understand the features of each method.

3-3 Examples of speed control

❶ Method using the tension detector*

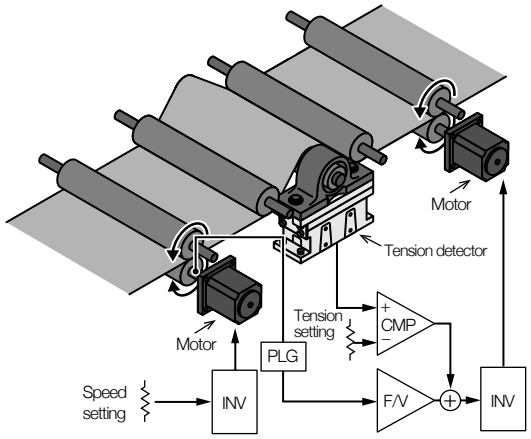

[Features of speed control using the tension detector*]

- Speed control can be performed using a simple configuration.
- The tension accuracy is better than the method using the dancer roll.
- The tension stability is rather low.
- The controllability considerably changes in accordance with the material characteristics.

* Tension detector is …
Equipment which converts the tension into the load once, and takes the load as the electrical signal

❷ Method using the dancer roll

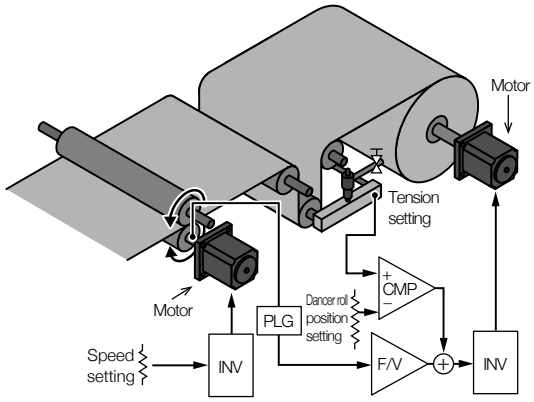

[Features of speed control using the dancer roll]

- The tension stability is high even with acceleration or deceleration.
- Synchronization can be easily achieved even if the path is long.
- The dancer roll absorbs shock.
- The tension accuracy depends on the air pressure and machine mechanism.

❸ Method using the powder clutch

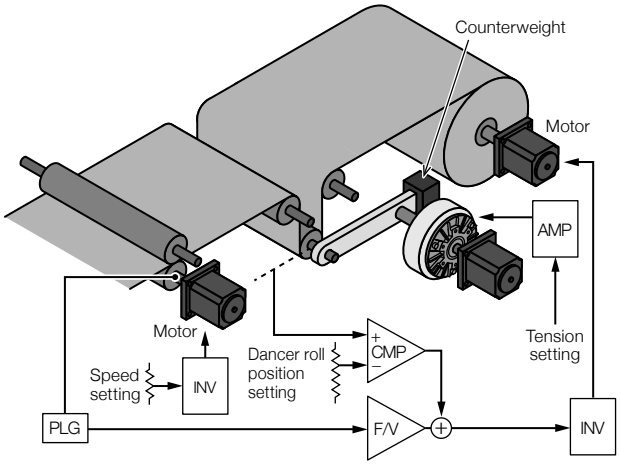

[Features of speed control using the powder clutch]

- The tension can be changed by the torque of the powder clutch.
- The dancer roll position depends on the difference between the input speed and the output speed.
- Synchronization can be easily achieved even if the path is long.
- The dancer roll position is not related to the tension.

❹ Method using draw control

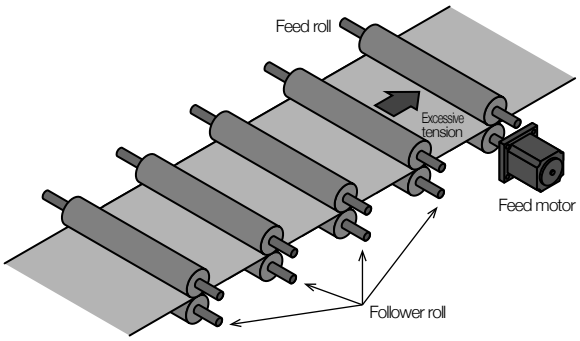

When many follower rolls are driven by the travelling material as shown in the left figure, the tension may become excessive toward the head area due to the effect of mechanical loss in the follower rolls.
For driving each follower roll to prevent excessive tension, it is necessary to control the speed in accordance with elongation and shrinkage of the material.

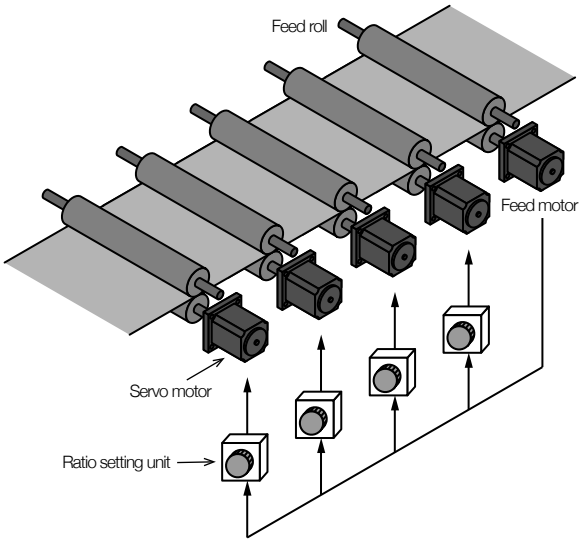

It is possible to drive each roll using the servo motors, and drive servo motors in the rear area at higher speed than servo motors in the front area using the ratio setting units as shown in the left figure.
The elongation percentage is approximately 0.1 to 5%.

The method of driving rolls in the rear area at higher speed in this way is called draw control. The operation tension is determined by the elongation percentage property of the material.

Applicable equipment

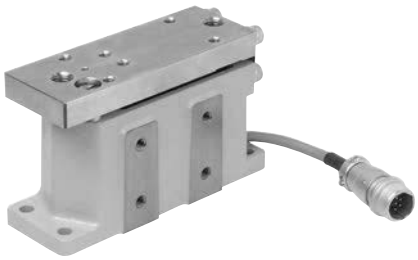

Mitsubishi Electric Corporation
Tension detector
LX-TD

3-4 System design flow

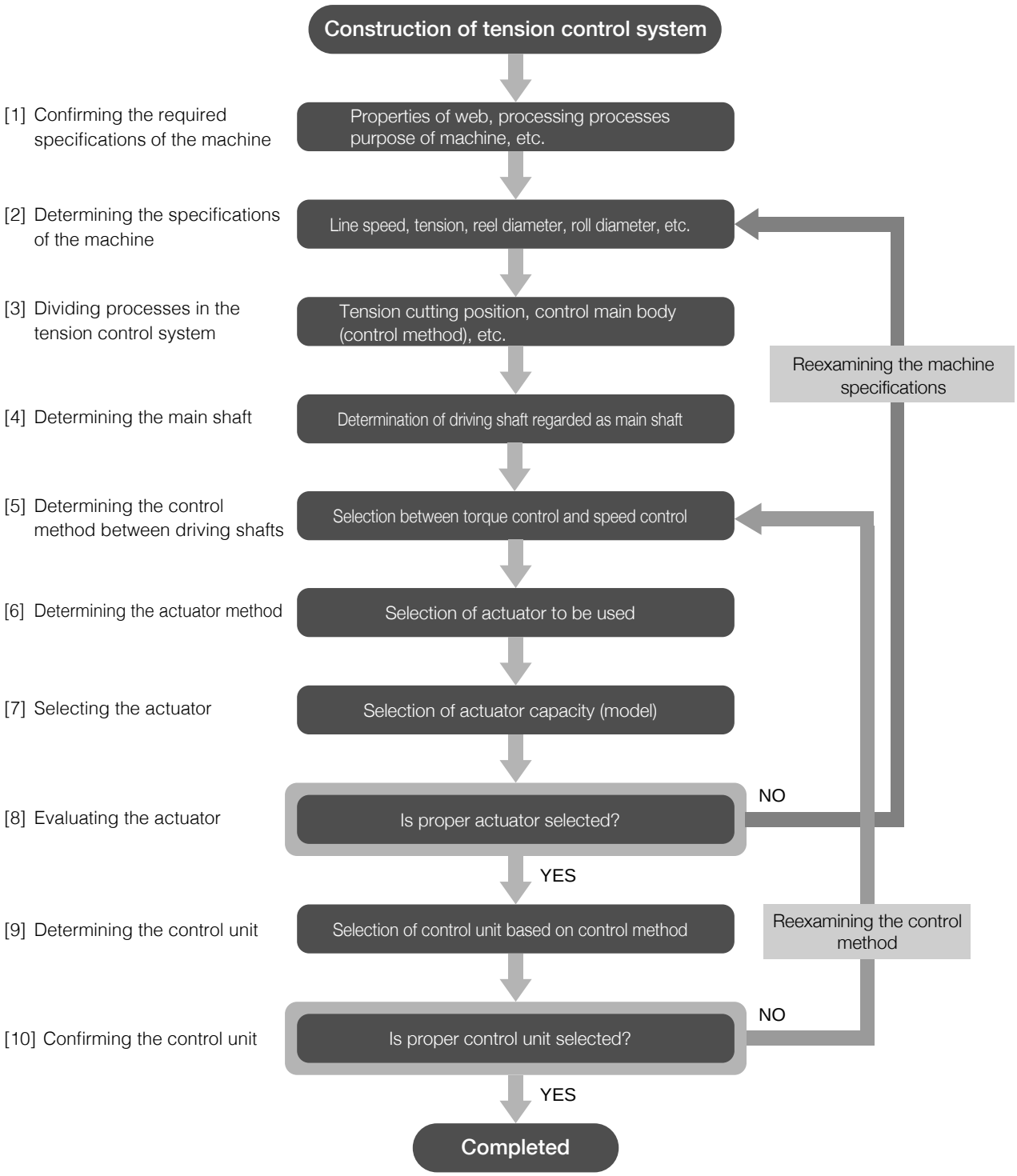

Important point!

Let's think the combination of control type (torque control or speed control) and auxiliary device (dancer roll or tension detector)!

MEMO

Chapter.4

Types of Tension Control (Torque Control)

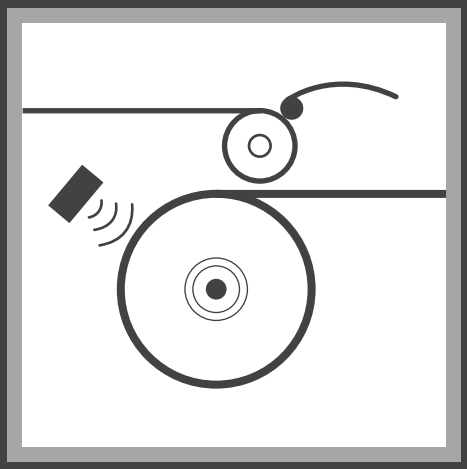

Chapter 4 Types of Tension Control (Torque Control)

Tension control (torque control) is classified into 3 types, "manual control", "open-loop control (reel diameter detection method)" and "closed-loop control (tension feedback method)".

4-1 Manual control

■ 4-1-1 What is manual tension control?

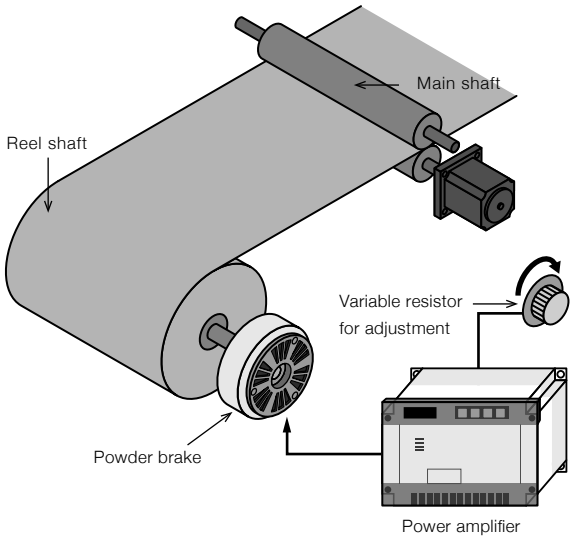

In manual tension control, the excitation current or applied voltage of the clutch or brake is adjusted gradually in accordance with changes in the reel diameter in winding or unwinding so that almost constant tension can be obtained. Various power supply units are available in manual control including the one which automatically compensates changes in the supply voltage and the one which offers constant current even if the temperature of the excitation coil changes in the clutch or brake.

[Advantages]

- ◆ When compared with the mechanical type
  - The control stability is high.
  - Adjustment is easy.
- ◆ The introduction cost is low.

[Disadvantages]

- ◆ The control accuracy is low.
- ◆ The control quality depends on human senses.
- ◆ Only gradual control is available.

Applicable equipment

Mitsubishi Electric Corporation
Manual power supply unit
LD-40PSU

Mitsubishi Electric Corporation
Power amplifier
LE-50PAU

Mitsubishi Electric Corporation
Power amplifier
LD-10PAU

The LD-40PSU (constant-voltage type manual power supply unit) incorporating the adjustor, LE-50PAU (constant-voltage/ constant-current selectable type power amplifier) to be combined with an external adjustor and LD-10PAU (constant-current control type power amplifier) are available. Among them, the power amplifiers are used also to amplify the output signal from the tension controller described later and excite the clutch or brake.
Other various power supply units and power supply parts are available.

■ 4-1-2 Use example of manual power supply unit

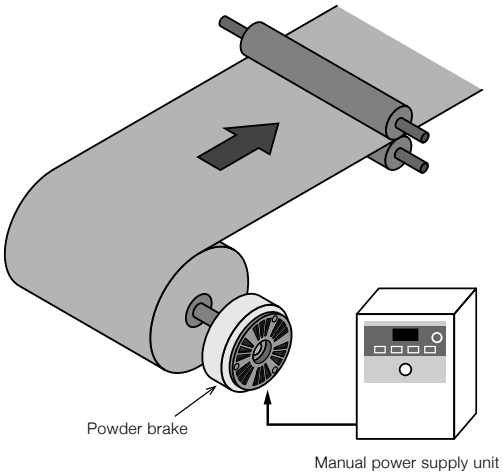

When the reel diameter ratio (Maximum diameter/Minimum diameter) is small in the processing machine for paper, film, wire, etc., for the intermediate shaft whose reel diameter does not change, or when high tension accuracy is not required, the manual power supply unit is used as shown in the left figure.

Though high tension accuracy is not expected, the tension can be changed easily using the variable resistor provided on the panel of the power supply unit. In addition, because the structure is simple, the tension can be adjusted at low cost.

■ 4-1-3 Use example of power amplifier

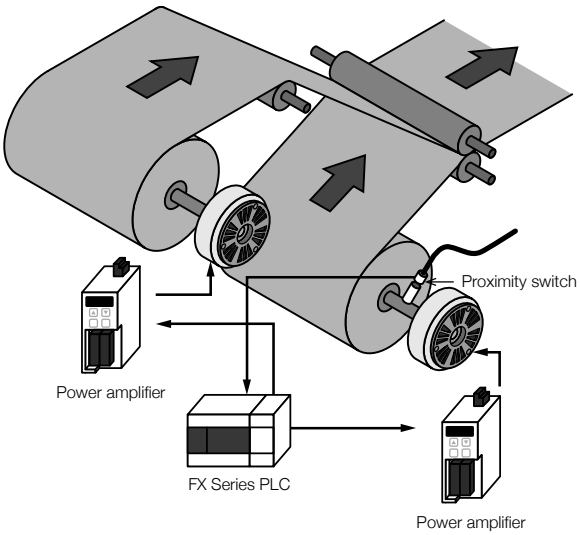

When there are many controlled shafts and the PLC performs centralized control, it is recommended to use the power amplifier as shown in the left figure so that the powder brake/clutch can be used very easily.

■ 4-1-4 Use example of manual power supply unit (in motor inspection)

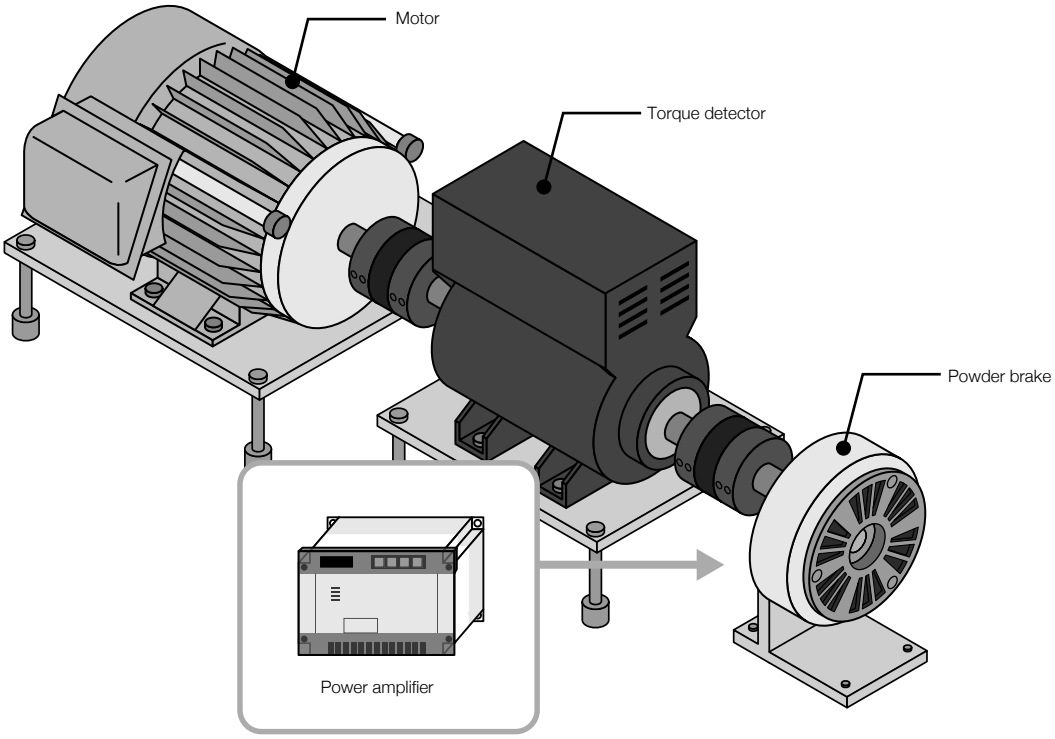

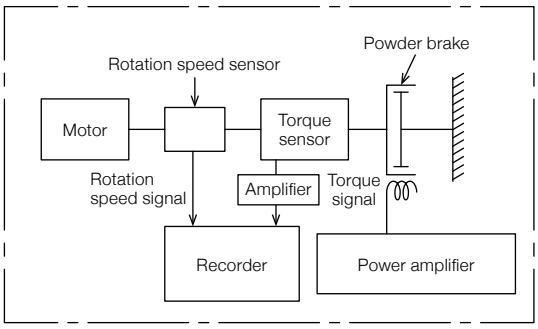

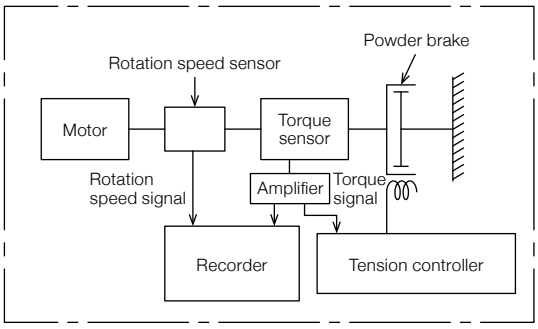

The powder brake is effective as a load of the motor load testing unit.
As an example, select the powder brake for measuring the characteristics of the motor with speed reducer whose output is 600 W (Torque: 44 Nm, rotation speed: 130 r/min) as shown in the left figure.

The heat generation quantity per unit time caused by slip "P" is as follows:

$$P = 0.105 \times T \times Nr = 0.105 \times 44 \times 130 = 600\ (W)$$

(As shown in the calculation result, the motor output is equivalent to the heat generation quantity per unit time caused by slip of the powder brake.)
Select the powder brake ZKB-5HBN (Allowable continuous heat generation quantity per unit time caused by slip: 1100 W, rated torque: 50 Nm, allowable rotation speed: 1800 r/min).

The load torque applied on the motor is changed by changing the excitation current of the powder brake using the constant-current type power amplifier, and then changes in the motor current and rotation speed are recorded.

Feedback control is enabled when the signal from the torque detector is sent to the tension controller.

4-2 Open-loop control (Reel diameter detection method)

■ 4-2-1 What is open-loop control?

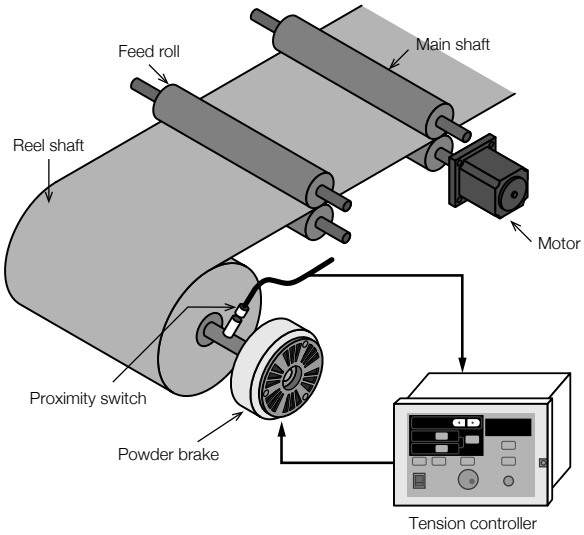

In open-loop control, the reel diameter is detected automatically in the winding section and unwinding section, and the winding torque and unwinding braking torque are controlled based on the reel diameter.
When the tension is kept constant in open-loop control, the reel diameter and reel shaft torque are controlled in the proportional relationship. As a result, stable tension control is achieved without sensitive effect of abrupt disturbances compared with the tension detection method (closed-loop control) described later.
Open-loop control is available also in simple taper control and control of such machines that cannot be combined with the tension detector.
However, because open-loop control is affected by torque changes and linearity of the actuator and mechanical loss, the absolute accuracy of tension is rather low.

[Advantages]

- ◆ The introduction cost is lower than closed-loop control.
- ◆ Stable control is achieved.
- ◆ The tension detector is not required.
- ◆ Taper control is easy.

[Disadvantages]

- ◆ The effect of mechanical loss and actuator characteristics cannot be ignored.
- ◆ The controlled tension cannot be grasped.

Applicable equipment

Mitsubishi Electric Corporation
Open-loop tension controller
LD-30FTA

Mitsubishi Electric Corporation
Tension controller
LD-10WTB-CCL

■ 4-2-2 Reel diameter detection and calculation method

Method to detect the reel diameter by touching the material

- Touch arm (lever) method

Method to detect the reel diameter without touching the material

- Ultrasonic method

Method to calculate the reel diameter without touching the material

- Integrated thickness monitoring method
- Speed & thickness setting method
- Ratio calculation method

● Touch arm (lever) method

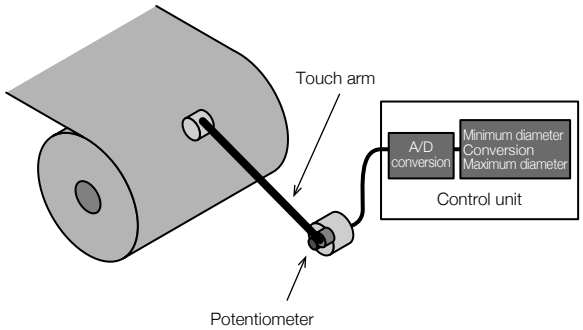

In this method, the moving angle of the roll in contact with the reel diameter is detected by the motion of the lever, and the signal in proportion to the reel diameter is obtained.

- ◆ The potentiometer, differential transformer, etc. are available as the arm angle detection sensor.
- ◆ Care is required so that the material surface is not damaged by the contact.
- ◆ It is necessary to adjust the pressing pressure of the arm.

● Ultrasonic method

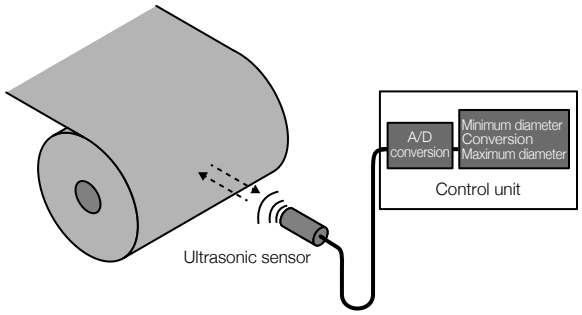

In this method, the signal returned by reflection is read by the ultrasonic sensor, and then the reel diameter is obtained.

- ◆ The material is not damaged because contact is not required.
- ◆ Some materials cannot be detected by the ultrasonic sensor.
- ◆ The reel diameter increase/decrease direction does not agree with the voltage change direction.

● Piled thickness calculation method

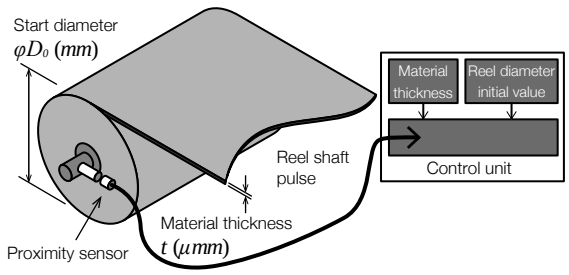

In this method, the reel diameter is calculated from the reel shaft rotation speed detected by the proximity switch attached to the reel shaft, reel shaft initial value and material thickness.
In this method, the current reel diameter is obtained by calculating the accumulated material thickness in reference to the reel diameter initial value by utilizing the fact that the reel diameter changes by twice the material thickness per rotation of the reel shaft.

- ◆ The noncontact type reel diameter calculation can be performed easily only by installing one proximity sensor.
- ◆ Error may be generated due to elongation of the material and involvement of the air.
- ◆ When the material is thick, the pulse number per rotation can be increased.

● Speed & thickness setting method (Sensorless method)

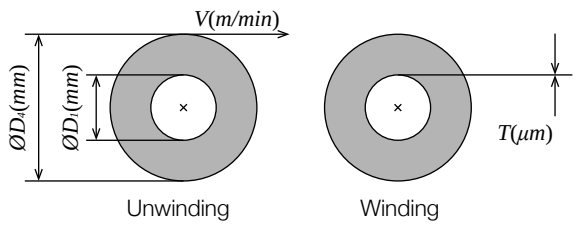

D_1 = Minimum diameter (mm) $D=\sqrt{D_1^2+4TVt/\pi}$ ···Winding

D_4 = Maximum diameter (mm) $D=\sqrt{D_4^2-4TVt/\pi}$ ···Unwinding

t = Operation time (min)

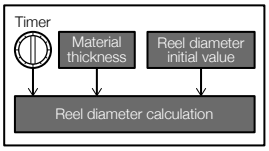

In this method, the reel diameter changing in accordance with the lapse of time is calculated from the material thickness set value and average speed value.

The left expression shows the reel diameter D (mm) when the material having the thickness T (μm) is wound and unwound at the line speed V (m/min).

When the minimum diameter D_1 (for winding) or maximum diameter D_4 (for unwinding) is set as the initial value and the material thickness T and average speed V are set, the reel diameter D changing in accordance with the lapse of time can be automatically calculated using the left expression. This method is called "speed & thickness setting method".

● Pulse Ratio calculation method

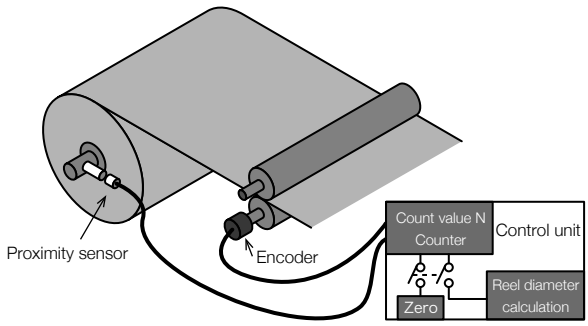

In this method, two sensors, the proximity switch attached to the reel shaft and the rotary encoder detecting the feed roll rotation speed, are used.

In this method, the reel diameter is calculated by counting the pulse number of the rotary encoder per rotation of the reel shaft by utilizing the fact that the rotation cycle of the reel increases as the reel diameter increases and the pulse number of the rotary encoder installed in the feed roll having a constant diameter does not change as far as the speed is constant.
Because errors caused by changes in the material thickness due to elongation of the material and involvement of the air are not generated, the reel diameter can be calculated with higher accuracy compared with the integrated thickness monitoring method as far as slip does not occur between the feed roll and the material.

- ◆ The reel diameter can be calculated with high accuracy.
- ◆ The resolution of the reel diameter calculation is determined by the pulse number of the encoder.
- ◆ Accurate calculation of the reel diameter is available only after the reel shaft rotates twice.

4-3 Closed-loop control (Tension feedback method)

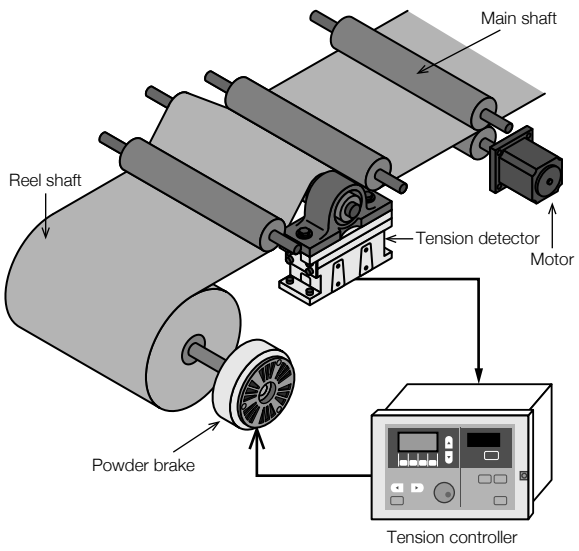

In closed-loop control method called also tension feedback method, the material tension is directly monitored by the tension detector, and the monitored value is fed back so that the monitored value becomes equivalent to the tension control target value.

Though accurate tension equivalent to the target value is obtained, the hunting phenomenon easily occurs by short-time disturbances. To cope with this, proportional integral control is generally performed.

Because the tension is fed back, the tension accuracy is better than the reel diameter detection/control unit.

[Advantages]

- ◆ The control accuracy is high.
- ◆ The controlled tension can be read directly.
- ◆ The torque characteristics of the actuator are also corrected.

[Disadvantages]

- ◆ The control is weak to short-time disturbances.
- ◆ The introduction cost is large.
- ◆ It is necessary to coordinate the machine manipulation and control.

Applicable equipment

Mitsubishi Electric Corporation
Tension controller
LE-10WTA-CCL

Mitsubishi Electric Corporation
Closed-loop tension controller
LE-30CTN

Mitsubishi Electric Corporation
Closed-loop tension controller
LE-40MTA-E

Mitsubishi Electric Corporation
Closed-loop tension controller
LE-40MTB-E

Important point!

Tension control method classification

The tension control method of powder clutches/brakes and hysteresis clutches/brakes are mainly classified into the following three types:

- Manual control ····· The material tension is adjusted by human senses.
- Open-loop control ····· The controlled torque in proportion to the reel diameter is generated.
- Closed-loop control ····· The tension is detected by the sensor, and then controlled so that it agrees with the target value.

MEMO

Chapter.5

What Is Tension Detector?

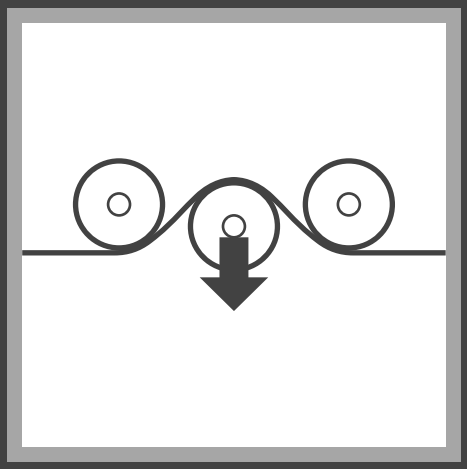

Chapter 5

What Is Tension Detector?

5-1 What is tension detector?

A tension detector is the equipment which converts the tension into the load once, and takes the load as the electrical signal.
The detection roller is installed above the tension detector and the guide rollers are installed before and after the tension detector, and then the material goes through each roller. By this setup, the tension applied on the material is applied as the load on the tension detector by way of the detection roller.

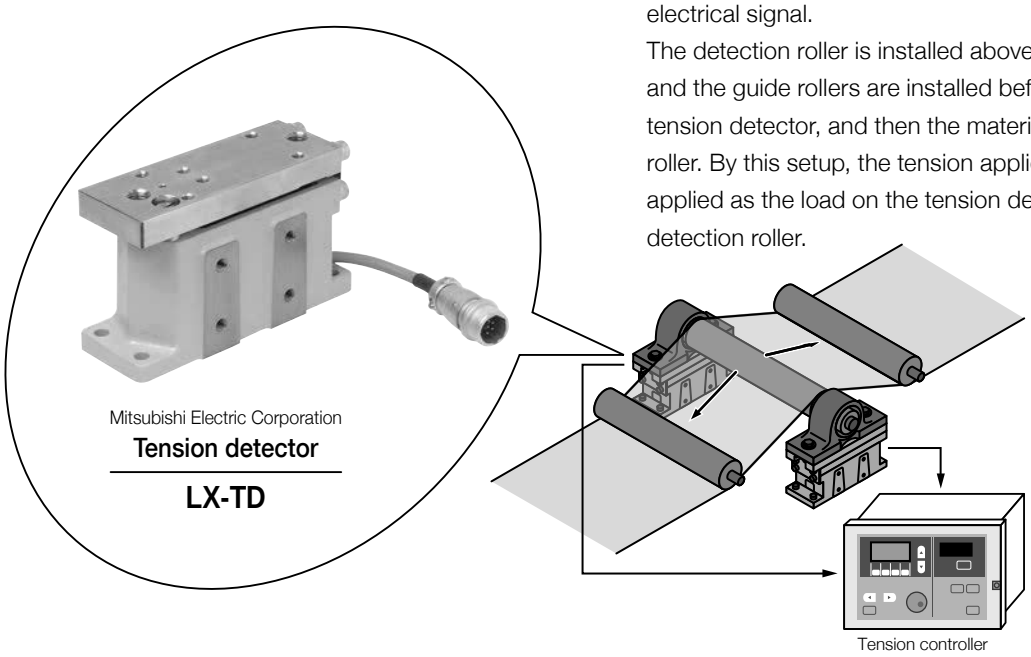

The internal flat spring bends in accordance with the load applied on the tension detector, and the load is output as the electrical signal by the differential transformer.

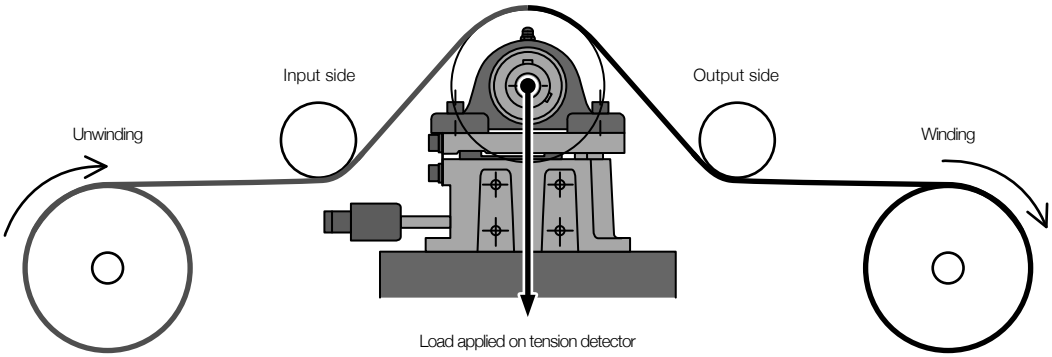

5-2 Types and features of tension detector

● Differential transformer type

The LX-TD tension detector manufactured by Mitsubishi Electric Corporation adopts the differential transformer.

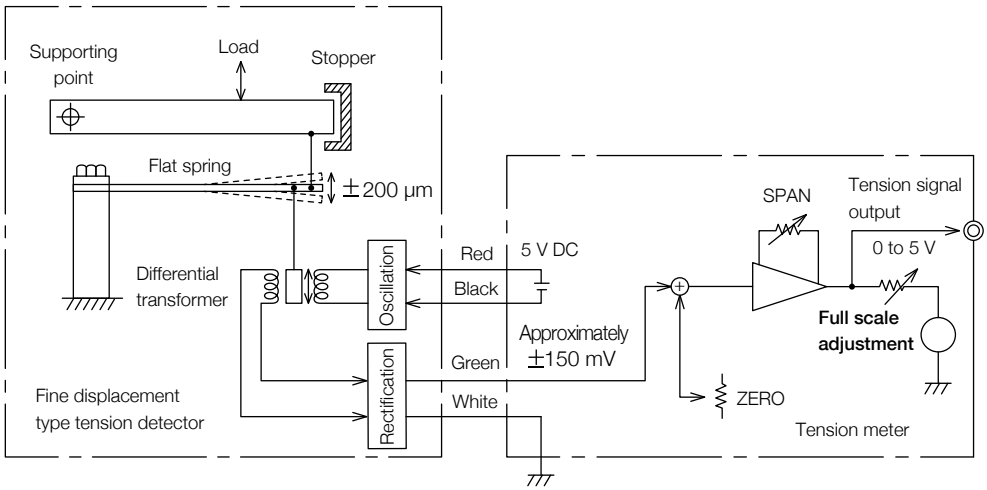

[Features of differential transformer type]

- The sensor section does not contact the detection target, and is highly resistant to shock.
- Because the output voltage is high, this type of sensor is highly resistant to electrical shock compared with other types of sensors.
- Less errors are generated during amplification.
- Correction is required against temperature changes.

● Other types

◆ Strain gauge type

- The structure is simple because the sensor can be directly pasted to the spring.
- The output voltage is small.
- Correction is required against temperature changes.
- This type has low resistance to the humidity.

◆ Pressductor®

- The load can be detected even if the displacement is small.
- This product is suitable for high tension.
- The amplifier circuit is complicated.
- The price is high.

◆ Magnetostriction type

- The sensor section does not contact the detection target, and is highly resistant to shock.
- Correction is required against temperature changes.
- The response speed is low.
- The amplifier circuit is complicated.

5-3 Tension and load

■ 5-3-1 Load direction and detection direction

(1)

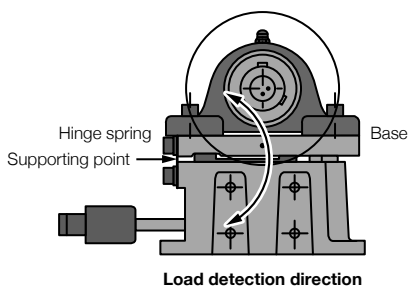

Figure (1) shows the relationship between the tension and the load applied on the tension detector. The tension detector uses the center of the hinge spring as the supporting point, and detects the load in the rotation direction whose center is the supporting point.
Because the deflection quantity of the base is extremely small, the load detection direction can be regarded actually as vertical to the tension detector.

(2)

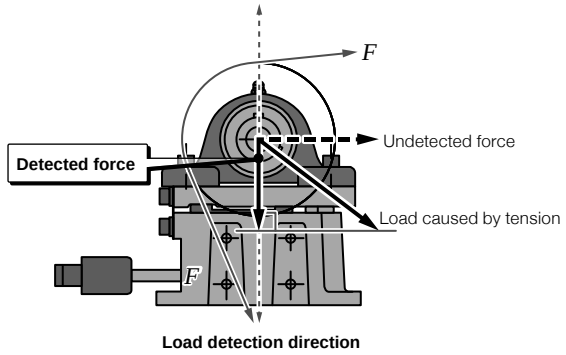

When the tension is applied as shown in Figure (2), the load is applied in the arrow direction due to the tension.
However, the tension detector actually detects only the force in the vertical direction as the load, and does not detect the force in the horizontal direction.
As described above, loads applied on the tension detector can be classified into "detected force" and "undetected force".

● Load direction and detection direction

(3)

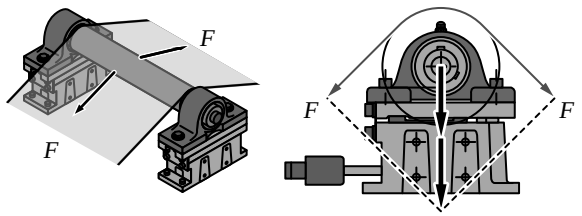

The tension is applied in two directions, on the input side and on the output side, as shown in Figure (3). The sum of the both forces is applied as the load on the tension detector.
When two tension detectors are used as shown in Figure (3), the applied load is "(Load caused by tension on input side + Load caused by tension on output side) / 2".

5-4 Selection of tension detector

■ 5-4-1 How to select the tension detector

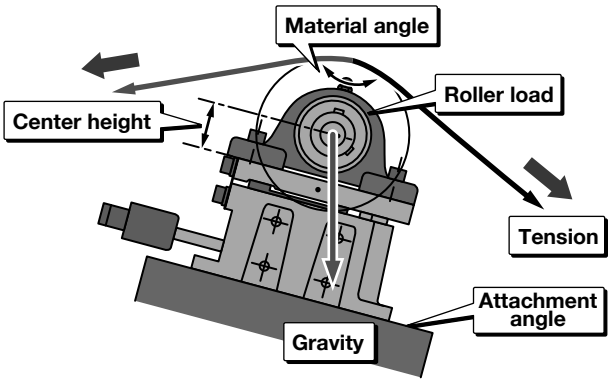

The following conditions should be examined for selecting a proper tension detector:

◆ Number of tension detectors
◆ Tension use range
◆ Weight of the tension detection roller
◆ Tension detector attachment angle
◆ Input/output material angle
◆ Center height of the pillow block (bearing)

● Load caused by the material angle and tension

(1)

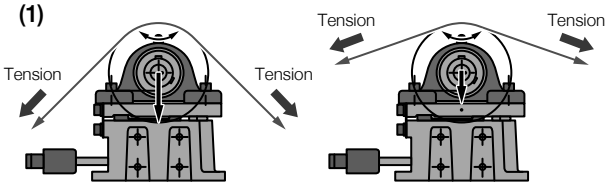

Figure (1) shows that the load applied on the tension detector is different when the material angle is different even if the tension is same.
Because the load applied on the tension detector varies depending on several conditions including the material angle even if the tension is same, it is necessary to select a proper tension detector in accordance with the existing conditions.

● Load caused by the tension detection roller and load caused by the tension

(2)

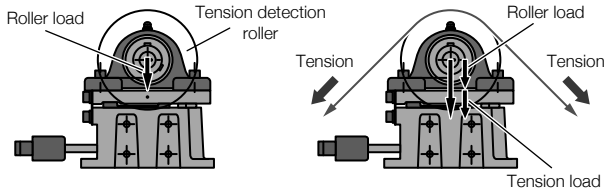

The loads applied on the tension detector can be classified into the following two types as shown in Figure (2):

- Load caused by the tension detection roller: Roller load
- Load caused by the tension: Tension load

A proper tension detector can be selected by calculating the above two loads.

● Load caused by the tension detection roller

(3)

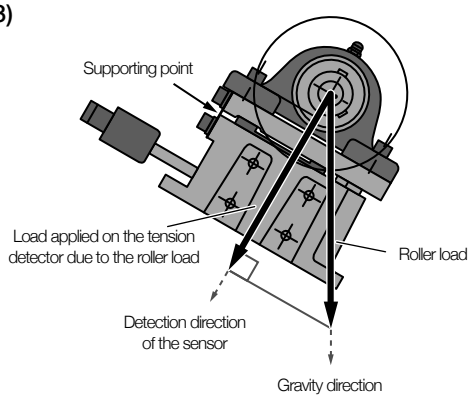

Because the tension detector detects the load around the supporting point as described above, the roller load detected by the tension detector is different if the tension detector attachment angle is different as shown in Figure (3).

● Effect of the center height

(4)

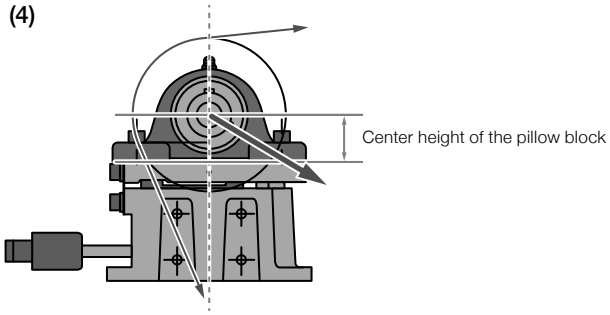

The pillow block (bearing) is used to connect the tension detector and tension detection roller as shown in Figure (4). The height of the pillow block (bearing) is called "center height". The tension load detectable by the tension detector varies depending on the center height.

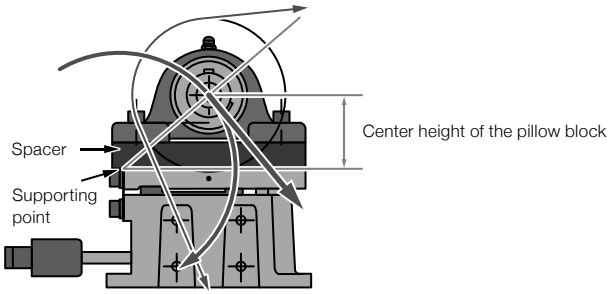

When the center height changes, the distance between the "supporting point of the tension detector" and the "center of the tension detection roller" changes accordingly.
In the same way as the principle of leverage, the tension load detectable by the tension detector changes even if the tension is same.

5-5 Cautions on attaching the tension detector

■ 5-5-1 How to attach the tension detector

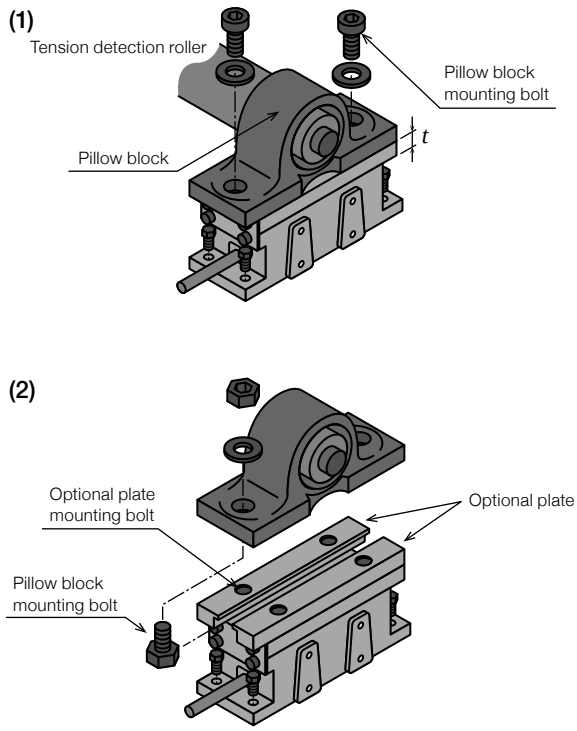

Because the tension detector is highly sensitive equipment manufactured by precise processing and assembly, attention is required to attach it.

[1] Attachment using the standard pillow block

The pillow block and pillow block mounting bolts are not offered as standard accessories.
Make sure that the length of the pillow block mounting bolts does not exceed the thickness "t" of the mounting base on tension detector side.
If the length of the bots exceeds "t", the bolts will touch the inside of the tension detector, may hinder accurate detection, and may cause a failure.

[2] Attachment using the optional plate

The pillow block and pillow block mounting bolts are not offered as standard accessories.
The optional plate mounting bolts are offered as accessories of the optional plate.

● Using the automatic aligning pillow block

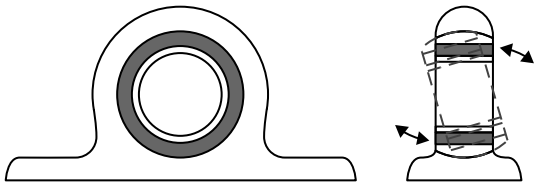

Automatic aligning pillow block

Make sure to use the automatic aligning pillow block as the bearing so that machining errors including imbalanced tension detection roller and non-parallel sensor mounting face and changes in the roller length caused by temperature changes are not detected as the tension.
The automatic aligning pillow block can mitigate the stress caused by the inclination of the tension detection roller and the effect of deviated material path and uneven thickness.

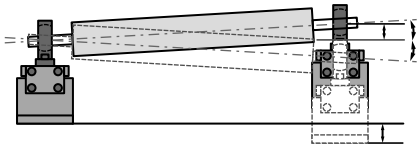

Inclination of the tension detection roller

The pillow block can mitigate the stress caused by the inclination of the tension detection roller.

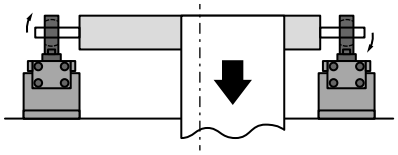

Deviated material path

The pillow block can mitigate the effect of deviated material path (when the edge position control is used) and of uneven thickness.

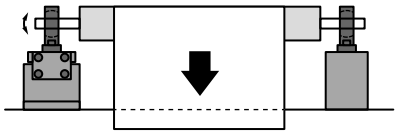

Only one tension detector

The pillow block can mitigate the effect of the inclination of the tension detection roller when only one tension detector is used.

● Height of the tension detector attachment face

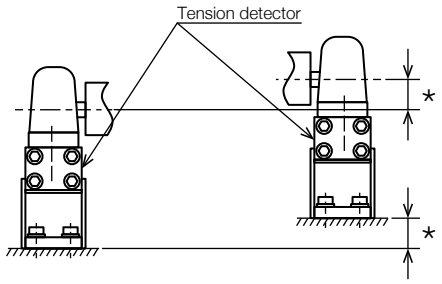

When supporting the tension detection roller at both ends, align the height of the tension detector mounting face. Minimize the dimension marked with "*" to reduce the tension detection error.
If the dimension marked with "*" is large, the material may meander, the bearing life may be short, and the zero-point output may change.
When using the spacer for aligning the height, make sure that the spacer has such a shape that can cover the entire mounting face.

● Use in an environment with large temperature changes

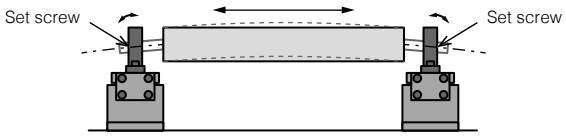

Elongation/shrinkage of the tension detection roller

The effect of elongation/shrinkage of the tension detection roller caused by changes in the ambient temperature can be mitigated.

When using the tension detector in an environment with large temperature changes, install such a mechanism as to absorb changes in the tension detection roller length caused by temperature changes so that the tension detection accuracy is not affected.
For example, the effect of elongation/shrinkage of the tension detection roller can be mitigated by loosening only one set screw used to fix the tension detection roller shaft in the bearing inner ring.

Important point!

LX-TD tension detector

Use two units of LX-TD tension detector in total, one unit at each end of the tension detection roller, when the material is wide so that the tension in the full width can be detected accurately even if the material is stretched on only one side.
Only one unit of tension detector may be installed on either side when the material is not stretched on one side.

Chapter.6

Actuator

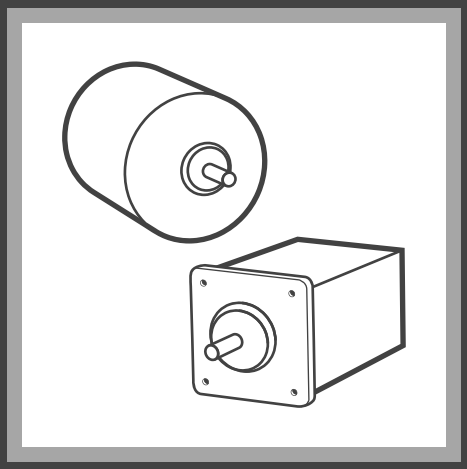

Chapter 6 Actuator

Motors, clutches, brakes, etc. which move machines are called actuators.

6-1 Types and features of actuator

Because each actuator has advantages and disadvantages, it is necessary to select proper actuators in accordance with the purpose.

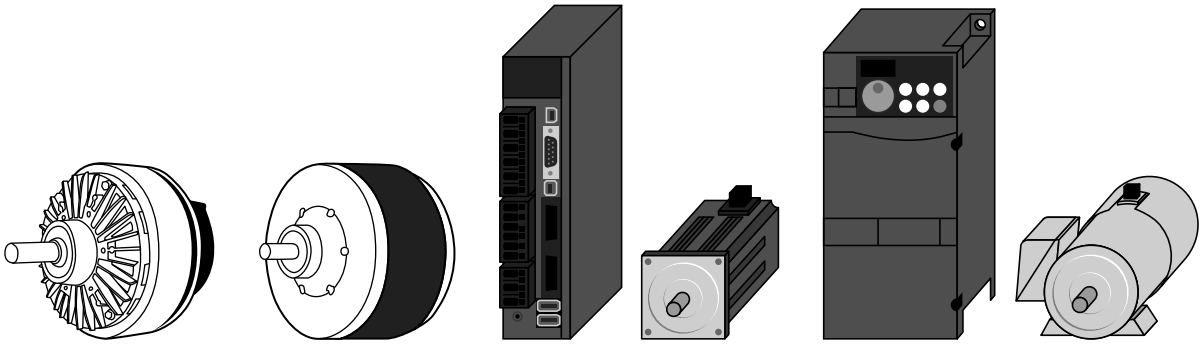

Item / Type	Powder clutch/brake	Hysteresis clutch/brake	Air clutch/brake	AC servo motor	Inverter (Vector control)
Torque linearity	3	3	3	4	4
Torque reproducibility	3	4	2	4	4
Torque control range	4 (1 to 100%)	3 (5 to 100%)	3 (5 to 100%)	4 (1 to 100%)	3 (2 to 100%)
Life	3 (Powder)	4	2 (Pad)	4	4
Installation cost	4	2	4	1	2
Line speed	Low to medium	Low to medium	High	High	Medium to high

1 Strongly disagree
2
3
4 Strongly agree

6-2 Powder clutch/brake

■ 6-2-1 Structure of clutch/brake

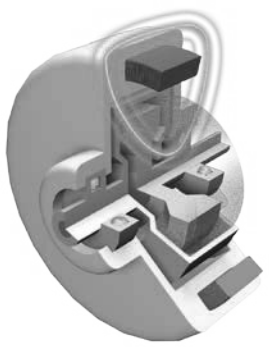

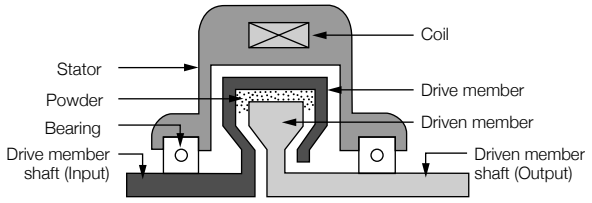

The torque is not transmitted while the current is OFF.

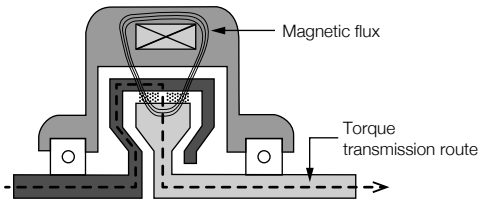

Powders are connected in a chain state along the magnetic flux and the torque is transmitted while the current is ON.

This subsection explains the types and features of actuators used in tension control.

Powder clutches/brakes are most representative actuators for tension control.
The left figure shows their principle of operation. Powders (magnetic iron powders) are filled between the drive member and the driven member.
When the excitation coil applies magnetism on the powders, the torque is transmitted between the drive member and the driven member, and the equipment works as the clutch.
When the driven member is fixed, the equipment works as the brake.

[Features]
[1] The torque is in proportion to the excitation current.
[2] Continuous slip operation is available, and the torque does not change even if the slip rotation speed changes.

Applicable equipment

Mitsubishi Electric Corporation
Powder clutch
ZKB-BN

Mitsubishi Electric Corporation
Powder brake
ZKB-XN

■ 6-2-2 Cautions on using the powder clutch/brake

[Installation]

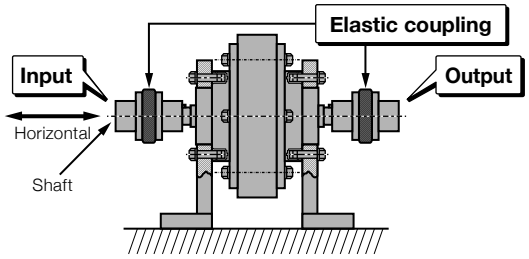

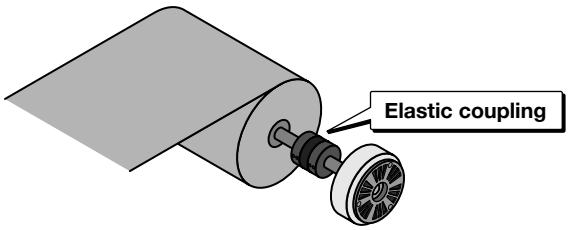

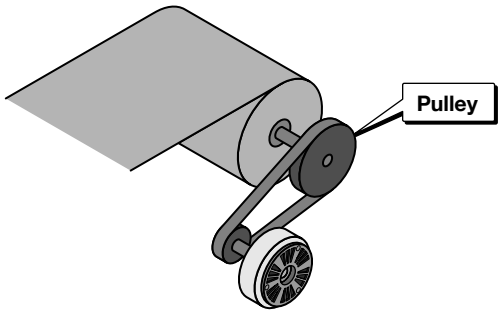

- **Using the high-speed rotation side as the input side**

Use the powder clutch in the regular installation status in which the high-speed rotation side is set as the input side. It is not recommended to use the powder clutch in the reverse installation status for continuous idling because the torque characteristics may be deteriorated and the powder life may be short.

- **How to connect the input shaft and output shaft of the powder clutch/brake**

There are mainly two methods to connect the powder clutch/brake shaft and load shaft, the method using a coupling and the method using a pulley and chain.
In the connection method using a coupling, use an elastic coupling, and make sure that the concentricity and squareness between the two shafts meet the values allowed in the used elastic coupling.
In the connection method using a pulley and chain, make sure that the load applied on the shaft is less than the allowable shaft load determined in accordance with the shaft strength and bearing allowable radial load.
Refer to the corresponding catalog or Clutch/Brake Technical Data for the allowable shaft load.

[Running-in operation]

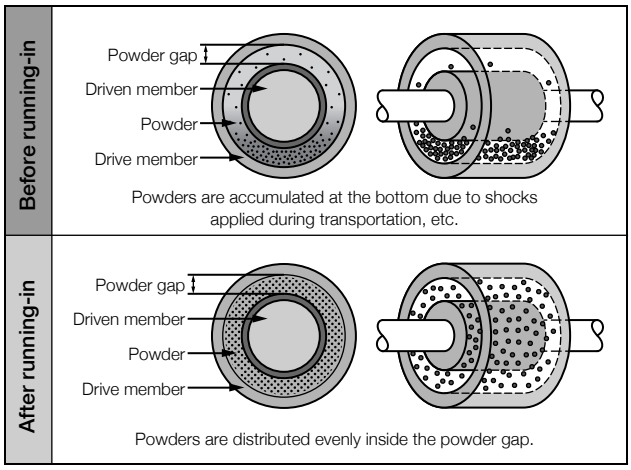

Powders inside the powder clutch/brake are distributed unevenly due to shocks applied during transportation, etc. Perform the running-in operation before starting the regular operation.

For bringing out the original performance of the powder clutch/brake, it is important that powders are distributed evenly inside the powder gap.
If powders are distributed unevenly, the torque may become lower, fluctuate or become uneven. As a result, the powder clutch/brake cannot offer the original performance.

The running-in operation makes unevenly distributed powders distributed evenly inside the powder gap to generate stable torque in proportion to the excitation current.
Refer to the corresponding catalog or instruction manual for the running-in operation procedure.

[Torque measurement method]

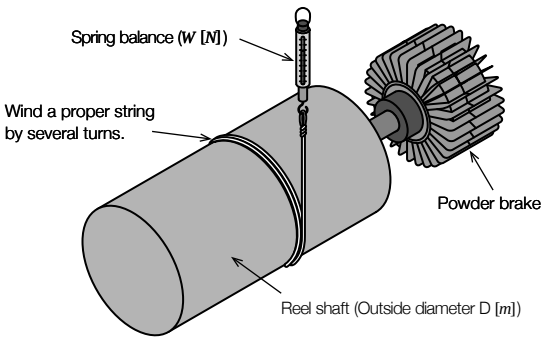

Read the value indicated by the spring balance while pulling up the spring balance at a constant speed as shown in the left figure.
(Measure the torque during rotation in the power ON status after the running-in operation.)

$$\text{Torque } (T) = W \times \frac{D}{2} \ [Nm]$$

[Idling torque]

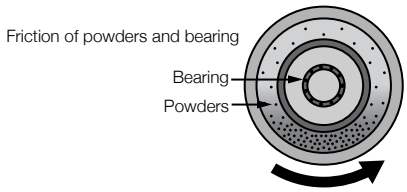

Even if the excitation current is shut down completely, the idling torque is generated in the powder clutch/brake due to the magnetism remaining in components and friction of powders and bearing.
Torque control is available at a torque larger than the idling torque. Refer to the corresponding catalog for the idling torque shown for each model.

Idling torque ≤ Available torque ≤ Rated torque

[Minimum rotation speed]

● If the rotation speed is low

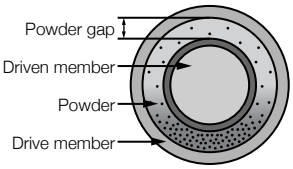

● If the rotation speed is high

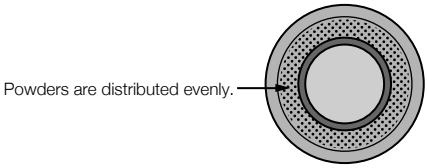

The minimum rotation speed required for operation is determined in the powder clutch/brake. In the powder brake, the minimum rotation speed is 15 r/min. In the powder clutch, the minimum difference in the rotation speed between the input and the output is 15 r/min.
(It means that both the powder clutch and the powder brake require the slip rotation speed of 15 r/min or more.)
If the slipping rotation speed is low, internal powders may be distributed unevenly and the stable torque performance may not be obtained, or considerable time may be required until the prescribed torque is achieved at startup.
The ZKB, ZKG and ZX type powder clutches/brakes can be used when the slip rotation speed becomes approximately 5 r/min.

Powder brakes	The rotation speed should be 15 *r/min* or more.
Powder clutches	The difference in the rotation speed between the input and the output should be 15 *r/min* or more.

[Moisture absorption of powders]

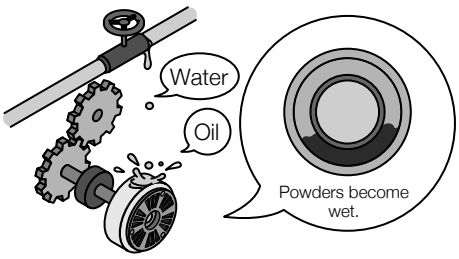

The performance of the powder clutch/brake may be unstable if powders become wet. Pay attention so that water, oil, etc. does not enter the inside.
Especially when the powder clutch/brake is installed near the gear box, oil may enter the inside by way of the shaft. Perform complete sealing.
Because the powder clutch/brake does not have a sealed structure, it cannot be used under such environment as to be directly exposed to oil mist, oil or water.

6-3 Hysteresis clutch/brake

■ 6-3-1 Structure of the hysteresis clutch/brake

● ZHA type

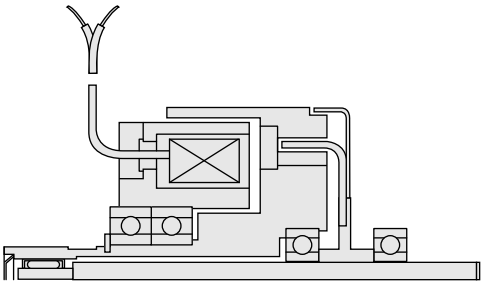

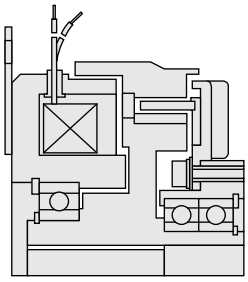

● ZHY type

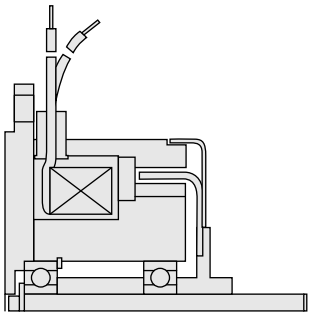

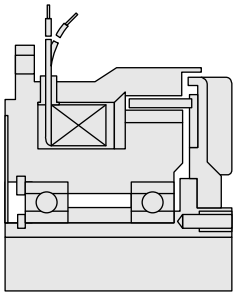

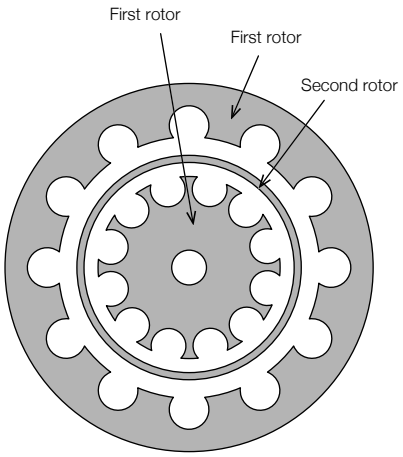

Cross-sectional drawing of the torque generation area

Hysteresis clutches/brakes have almost similar characteristics as powder clutches/brakes described above, and are suitable for tension control.
Because hysteresis clutches/brakes are not the friction type, the life is longer than powder clutches/brakes, but the capacity is small.
Mitsubishi Electric Corporation offers natural cooling type hysteresis clutches/brakes whose rated torque is 0.003 to 6 Nm.
Hysteresis clutches have the magnetic pole made of the inner and outer rotor integral type first rotor, and generate torque between the first rotor and the cylindrical-shaped second rotor (non-magnetized permanent magnet).
In hysteresis brakes, the first rotor is fixed together with the excitation coil.

Applicable equipment

Mitsubishi Electric Corporation
Hysteresis clutch
ZHA

Mitsubishi Electric Corporation
Hysteresis brake
ZHY

■ 6-3-2 Cautions on using the hysteresis clutch/brake

● Residual torque ripple

[1]

[2]

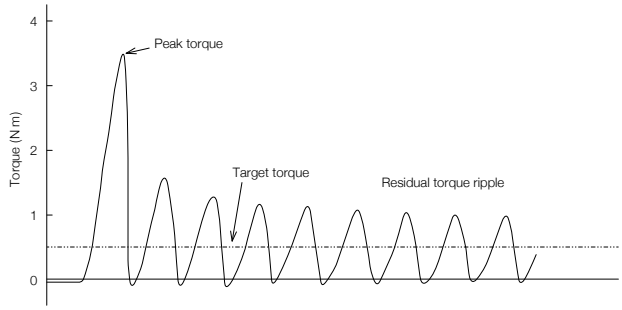

One of items to be handled most carefully in using hysteresis clutches/brakes is residual torque ripple which is the phenomenon that the alternating magnetic poles (N pole and S pole) remain in the internal permanent magnet even if the excitation current is shut down, and ripple-shaped torque unevenness is caused by rotation.
When the excitation current is shut down in the status without rotation (including the status without relative rotation between the first rotor and the second rotor in hysteresis clutches), residual torque ripple is generated (Figure [1]).
The residual torque ripple does not give any effect if hysteresis clutches/brakes are restarted at the current 60 to 70% or more of the current at shutdown.
Residual torque ripple can be seen in the status without the excitation current, but it gives outstanding effect when hysteresis clutches/brakes are restarted at a current smaller than the current at shutdown. Large peak torque is generated at restart as shown in Figure [2].
Even if residual torque ripple remains, it can be erased completely if the excitation current is increased and decreased while hysteresis clutches/brakes are rotated again.
If the tension suddenly fluctuates considerably due to the effect of residual torque ripple though the tension was controlled without any problem using a hysteresis clutch/brake in the early stage, it is possible that the excitation current larger than the normally used excitation current flew while rotation was stopped. (Residual torque ripple does not have such a property as to be accumulated gradually during use for a long time.)
Residual torque ripple can be erased and prevented using the following methods:

• In the normal use

Residual torque ripple does not remain when the excitation current is shut down while the rotation speed (relative rotation speed between the first rotor and the second rotor in hysteresis clutches) is 50 r/min or more.
However, small residual torque may remain depending on the model and current shutdown speed. In such a case, it is necessary to increase the rotation speed furthermore.

• When the rotation speed is low

When the relative rotation speed is 50 r/min or less, shut down the excitation current in the following period of time to erase residual torque ripple:

10 *to* 50 *r/min*:	1 *sec*
5 *to* 10 *r/min*:	5 *sec*
5 *r/min* or less:	20 *sec* or more

• Applying the excitation current in the reverse direction

When residual torque ripple remains, flow the current 30 to 50% of the current at shutdown in the reverse direction. However, because the magnetic poles will be deviated and no effect will be given if the input rotor and output rotor are free each other, it is necessary to hold the first rotor and second rotor to prevent relative rotation.
Note that it is possible to reduce residual torque ripple to some extent, but not possible to erase it completely because the reverse current varies depending on the model and current at shutdown.

6-4 AC servo motor and inverter/motor

■ 6-4-1 What are an AC servo motor and inverter/motor?

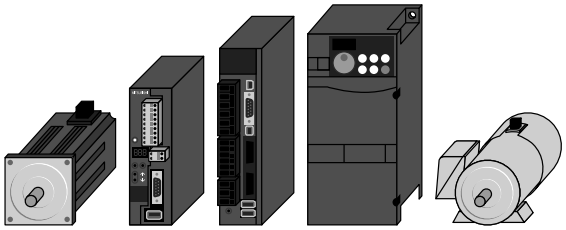

The Mitsubishi MELSERVO-J3/J4 Series AC servo motors and Mitsubishi FREQROL-A700/A800 Series general-purpose inverters can be operated in the torque control mode to perform winding and unwinding.
In the torque control mode, servo motors and inverters/motors are controlled so that a torque in proportion to the command input is obtained. Accordingly, it is possible to obtain a constant tension by giving the command input in proportion to the reel diameter.

◇ What is an AC servo motor?
A servo motor is a motor controlled to comply faithfully with commands.

- Commands refer to the position (motor rotation angle), rotation speed and rotation force (torque).
- The motor status in response to the command is fed back and controlled.
- A servo motor adopting a synchronous motor is called AC servo motor in Mitsubishi Electric Corporation.
- An AC servo motor is a kind of inverter in a broad sense.

◇ What is an inverter?
An inverter is equipment to convert the frequency.

- An inverter for motor control refers to the equipment which changes the power frequency of a motor (generally induction motor) to change the rotation speed of the motor.
- Each manufacturer generally classifies inverters into several ranks by the motor control function.

◇What is an inverter (vector control)?
An inverter (vector control) refers to an induction motor combined with an encoder for detecting the position/rotation speed and a cooling fan.

- Inverters (vector control) can control the position (motor rotation angle), rotation speed and rotation force (torque).
- Inverters (vector control) can achieve control of higher quality than general-purpose inverters for motor control though the accuracy is lower than AC servo motors.
- In tension control, inverters (vector control) offer higher stability in the rotation speed because the inertia inside the motor is larger than AC servo motors.
- Inverters (vector control) offer smoother transition between the power running torque area and the regenerative torque area than AC servo motors.

Applicable equipment

Mitsubishi Electric Corporation
AC servo motor
MELSERVO-J4

Mitsubishi Electric Corporation
Inverter
FREQROL-A700/A800

■ 6-4-2 Cautions on using the AC servo motor and inverter (vector control)/motor

[1] The nominal motor output is determined by the rated rotation speed and output torque in continuous operation at the rated rotation speed.
Large torque is required at the maximum reel diameter in winding and rewinding, and the rotation speed becomes high at the minimum reel diameter. It means that a large-capacity motor is required as the reel diameter ratio (ratio between the maximum reel diameter and the minimum reel diameter) is high.
However, the motor capacity can be reduced in some cases by utilizing the constant-output area.

[2] For tension control, the rated torque, not the short-time maximum torque, should be examined in the motor.

[3] Compared with AC servo motors, inverters/motors are not suitable for systems of high torque ratio (Maximum reel diameter/Minimum reel diameter × Maximum tension/Minimum tension) because the torque control range is narrow.

[4] AC servo motors are generally suitable for use at high rotation speed. Their output torque is extremely small compared with powder clutches/brakes, and speed reducers are required to drive the reel shaft. If the gear ratio of the speed reducers is too high, accurate tension control cannot be achieved.

[5] When the torque command crosses the regenerative area and power running area, AC servo motors are not suitable for control requiring high accuracy because the torque linearity is not good.

[6] AC servo motors are not suitable for use at low speed because cogging torque is generated in the low-speed area.

[7] In AC servo motors, the recommended value of the load inertia moment ratio is determined for winding and unwinding against the inertia moment of motors.
Refer to the corresponding catalog for the details.

● **AC servo motor**

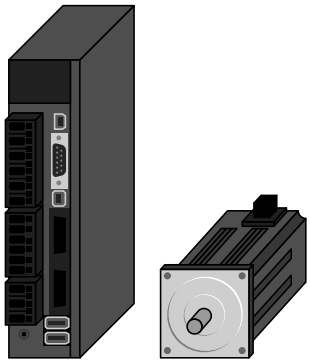

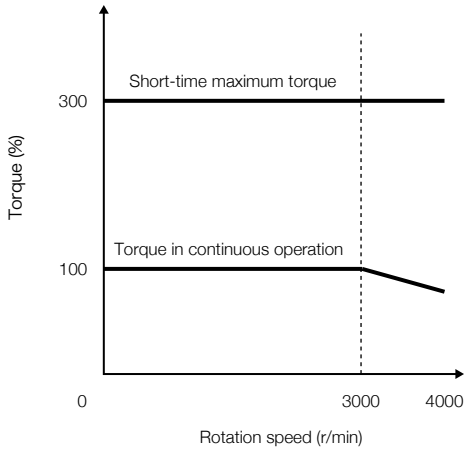

● **Inverter/motor**

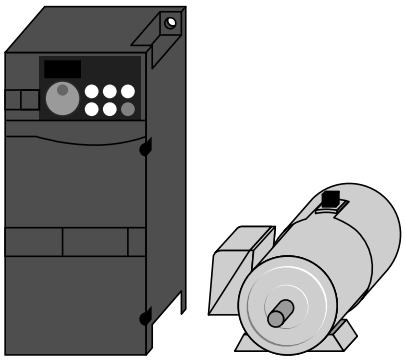

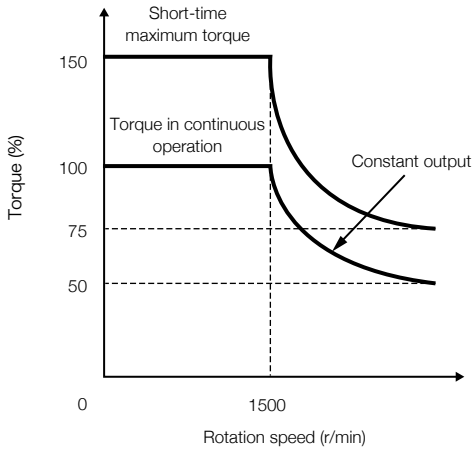

6-5 Air clutches/brakes (manufactured by other companies)

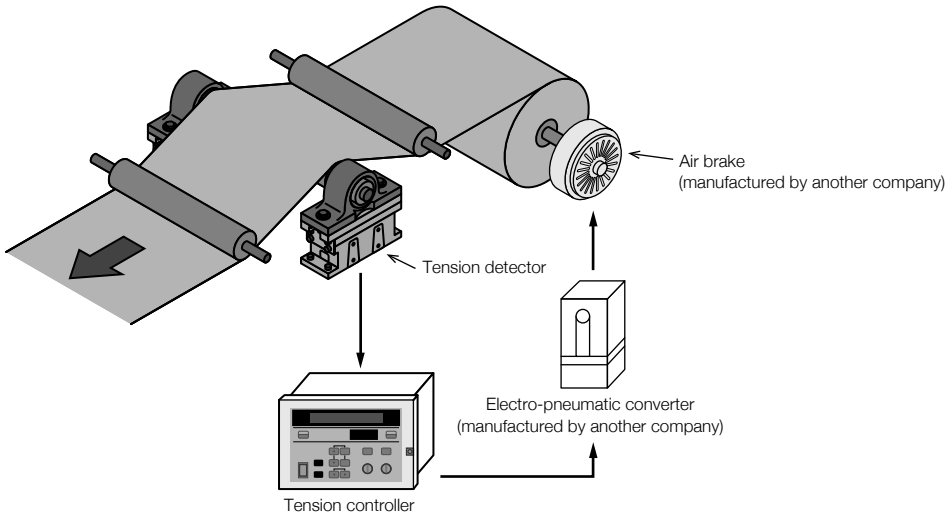

Air clutches/brakes (manufactured by other companies) transmit the torque by pressing the friction plate with air. Air clutches/brakes are used for winding and unwinding with relatively large torque and heat capacity compared with powder clutches/brakes. In this case, Mitsubishi tension controller is available by way of the electro-pneumatic converter.

[Features]

- The torque is almost in proportion to the air pressure.
- The torque can be changed by changing the number of calipers.
- The torque changes in accordance with the slip rotation speed.
- Friction powders are generated from the calipers and disc.

6-6 Differences between control using motors and control using powders

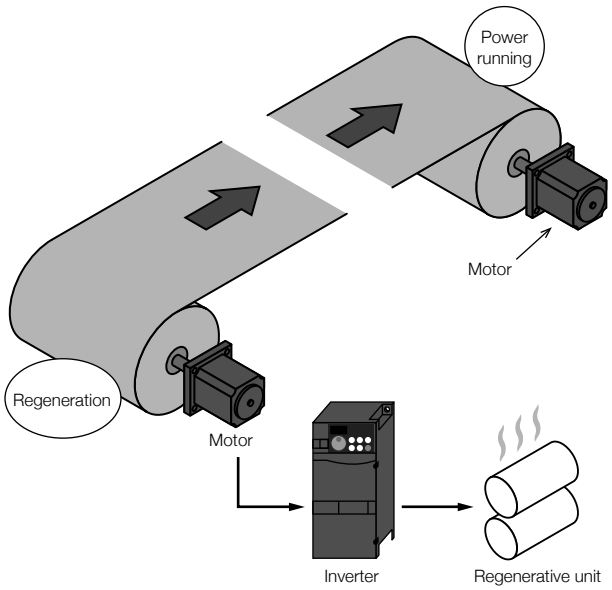

• Control using motors

Motors are used on the side rotating the load (power running side) and the side rotated by the load (regenerative side).
When motors are used for winding and unwinding:
Winding side … Side rotating the load (power running side)
Unwinding side … Side rotated by the load (regenerative side)
On the regenerative side, the motor works as a generator, and generates electrical energy. Because the generated electrical energy returns to the AC servo amplifier or inverter, it is necessary to release it by returning it to heat or power. The regenerative unit or regenerative converter is used for this purpose.

[Rotation speed]

Because the torque can be insufficient in the motor if the rotation speed is low, the gear ratio is often increased. However, if the gear ratio is too high, mechanical loss and torque fluctuation may increase.
In the servo motor, torque ripple (torque unevenness) is generated due to the switching of the motor magnetic pole at low rotation speed.
Motors are not perfect, and it is necessary to select a proper actuator in accordance with the use conditions.

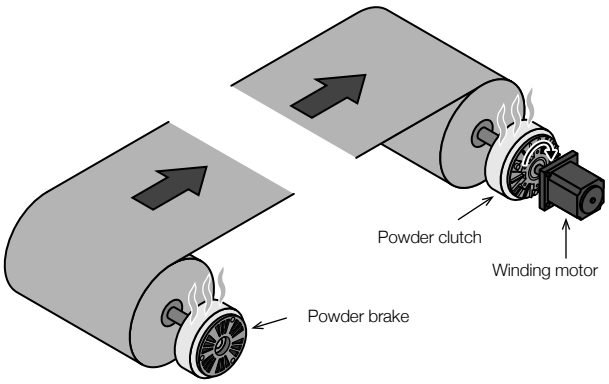

• Control using powders

[Powder clutch and powder brake]

The clutch is generally used for winding in combination with a motor.
The clutch is sometimes used for unwinding in combination with a reverse rotation motor when the line speed is low.
The clutch transmits the motor power to the load shaft, or shuts down the motor power.
One of the features of the powder clutch is transmitting the power with slipping. Accordingly, the powder clutch can make the rotation speed extremely low or zero on the load shaft side, which cannot be achieved by control using motors.
However, slip changes into heat energy and generates heat.
The brake applies braking on the power of the load shaft.
Because the powder brake applies braking with slipping, slip changes into heat energy and generates heat.
Generated heat reduces the powder life. In addition, it is necessary to observe the restriction in heat generation (allowable heat generation quantity per unit time caused by slip).

6-7 Actuator selection flow

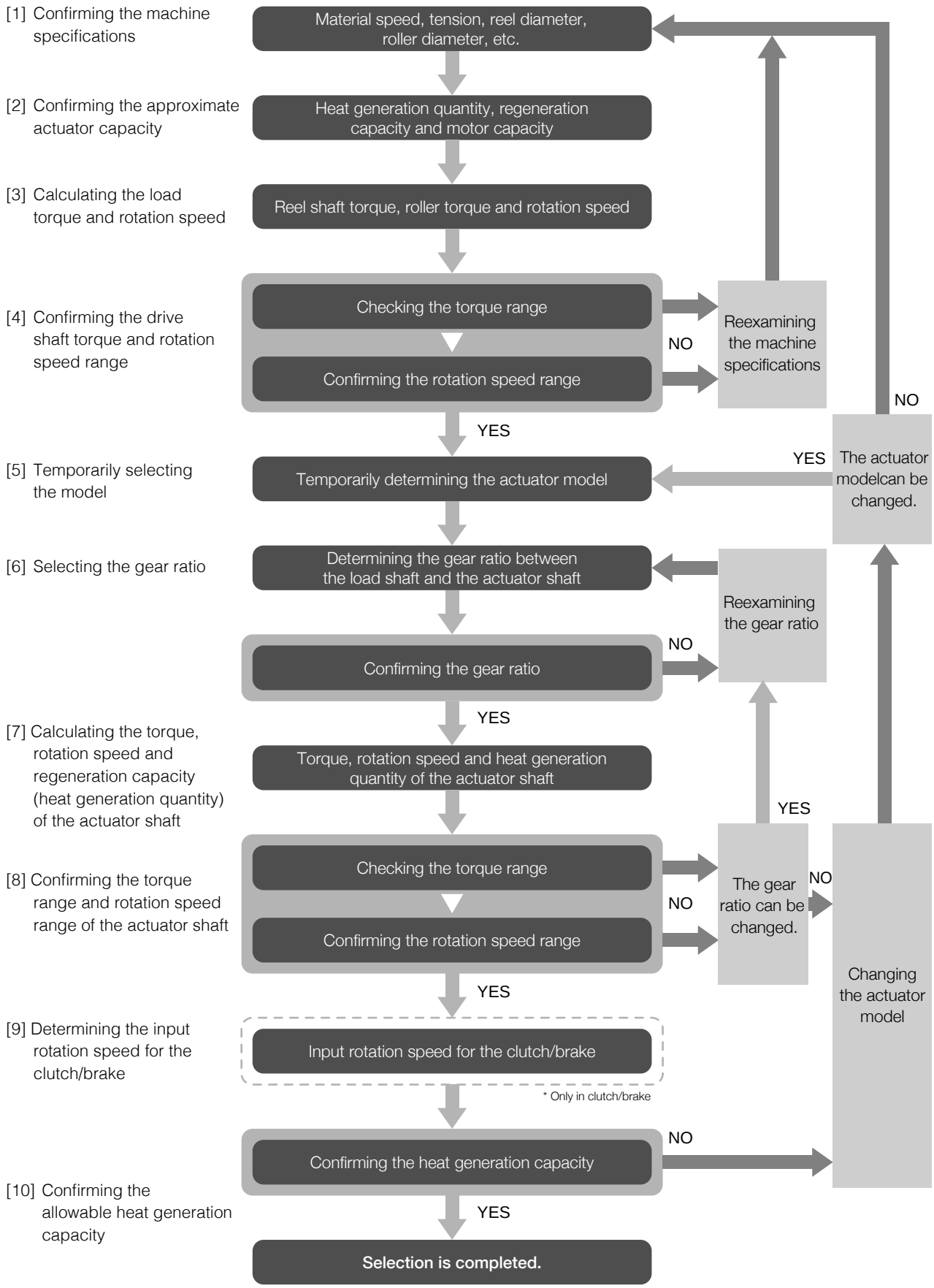

The above figure shows the actuator selection flow.
First, confirm the machine specifications, and calculate the approximate capacity of the actuator. Next, temporarily select the model in accordance with the load shaft, torque and rotation speed. Finally, set the gear ratio, and confirm that the torque, rotation speed and capacity of the actuator shaft are all right.

6-8 Selecting the actuator

■ 6-8-1 Powder brake for unwinding

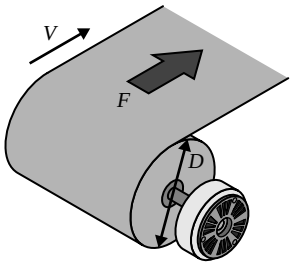

Use condition	
Tension (F)	40 to 80 N
Reel diameter (D)	75 to 250 mm
Line speed (V)	5 to 15 m/min
Reduction ratio	1

This subsection shows a calculation example of powder brake for unwinding.
Calculate the torque, rotation speed and heat generation quantity per unit time caused by slip based on the use conditions.
The maximum value and minimum value of the braking torque required at the start and end of unwinding can be obtained as follows:

$$Tmax = \frac{Dmax}{2} \times Fmax = \frac{0.25}{2} \times 80 = 10\ Nm$$

$$Tmin = \frac{Dmin}{2} \times Fmin = \frac{0.075}{2} \times 40 = 1.5\ Nm$$

The maximum value and minimum value of the rotation speed can be obtained as follows:

$$Nmax = \frac{Vmax}{(\pi \times Dmin)} = \frac{15}{(\pi \times 0.075)} = 63.7\ r/min$$

$$Nmin = \frac{Vmin}{(\pi \times Dmax)} = \frac{5}{(\pi \times 0.25)} = 6.4\ r/min$$

The heat generation quantity per unit time caused by slip can be obtained as follows:

$$P = 0.105 \times T \times N = 0.0167 \times F \times V = 0.0167 \times 80 \times 15 = 20\ W$$

Select a proper powder brake model based on the above calculation results.
Select such a model that all of the torque, rotation speed and heat generation quantity per unit time caused by slip do not exceed the allowable value.
In these conditions, the model ZKB-1.2XN is available.

■ 6-8-2 Powder clutch for winding

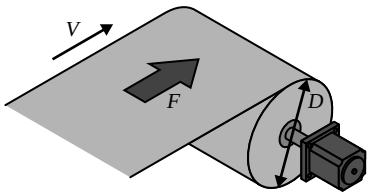

Use condition	
Tension (F)	40 to 80 N
Reel diameter (D)	75 to 250 mm
Line speed (V)	5 to 15 m/min
Reduction ratio	1

This subsection shows a calculation example of powder clutch for winding.
Calculate the torque, rotation speed and heat generation quantity per unit time caused by slip based on the use conditions.
The maximum value and minimum value of the clutch torque required at the start and end of winding can be obtained as follows:

$$Tmax = \frac{Dmax}{2} \times Fmax = \frac{0.25}{2} \times 80 = 10\ Nm$$

$$Tmin = \frac{Dmin}{2} \times Fmin = \frac{0.075}{2} \times 40 = 1.5\ Nm$$

The maximum value and minimum value of the rotation speed on the output side can be obtained as follows:

$$Nomax = \frac{Vmax}{(\pi \times Dmin)} = \frac{15}{(\pi \times 0.075)} = 63.7\ r/min$$

$$Nomin = \frac{Vmin}{(\pi \times Dmax)} = \frac{5}{(\pi \times 0.25)} = 6.4\ r/min$$

In clutches, the rotation speed Ni on the "heat generation quantity per unit time caused by slip" input side should be considered also and calculated as follows:

$$Ni = Nomax + 15 = 78.7\ r/min\ \text{(Temporarily)} \rightarrow 90\ r/min\ \text{(Reduction ratio 1/20)}$$

The heat generation quantity per unit time caused by slip can be obtained as follows:

$$P = 0.105 \times Tmax \times (Ni\text{-}No) = 0.105 \times 10 \times (90\text{-}6.4) = 87.8\ W$$

Because the heat generation quantity per unit time caused by slip varies depending on the motor rotation speed, it is necessary to select temporarily also the specifications of the winding motor to be used.
Select such a powder clutch model that all of the torque, rotation speed and heat generation quantity per unit time caused by slip do not exceed the allowable value.
In these conditions, the model ZKB-1.2BN is available.

● Selecting the winding motor

[Geared motor selection conditions]

Rotation speed: $90\ r/min$ → Reduction ratio: $1/20$
Torque: $10.0\ Nm \times 2 \rightarrow 20\ Nm$ or more
Safety factor

[GM-S characteristics table]

Output (kW)	Rotation speed of output shaft (r/min)		Nominal reduction ratio	Actual reduction ratio	Allowable torque of output shaft (Nm)	
	50 Hz	60 Hz			50 Hz	60 Hz
0.2	500	600	1/3	1/3.07	3.5	2.9
	300	360	1/5	1/4.97	5.9	4.9
	150	180	1/10	1/9.93	12	9.8
	100	120	1/15	1/14.81	18	15
	75	90	1/20	1/20.08	24	20
	60	72	1/25	1/23.85	29	25
	50	60	1/30	1/28.88	33	29
	37.5	45	1/40	1/41.07	47	39
	30	36	1/50	1/48.96	59	49
				. . .		

[Geared motor selection result]

Output: 0.2 kW
Reduction ratio: 1/20

● What is reverse rotation input?

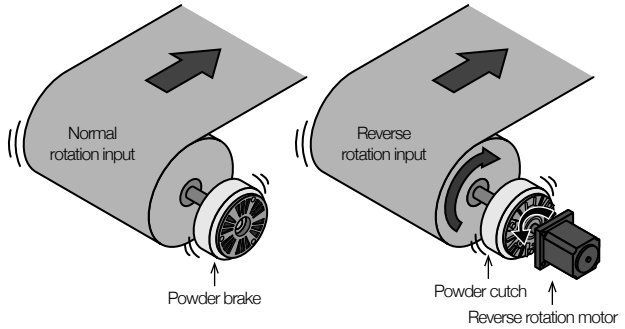

■ Unwinding side (Powder brake)

When the input rotation speed is lower than the minimum rotation speed in the powder brake

Minimum rotation speed		Model
5 r/min or less	→	ZKG, ZKB or ZX
15 r/min or less	→	ZA

In this case, replace the powder brake with the combination of "powder clutch + reverse rotation motor".

When the line speed is extremely low in unwinding, the input rotation speed may be lower than the minimum rotation speed in the powder brake.
In such a case, replace the powder brake with the combination of "powder clutch and reverse rotation motor".
It is called reverse rotation input because the motor rotates in the reverse direction of the reel shaft rotation direction.
Connect the output side (or input side) of the powder clutch to the unwinding reel shaft, connect the geared motor to the input side (or output side), and then always rotate the geared motor in the direction reverse to the unwinding reel shaft rotation direction. By this configuration, sufficient slip rotation speed can be secured, and stable torque control is achieved.
With regard to the powder clutch installation direction, usually connect its input side to the side of higher rotation speed. For example, when the line speed is low and the rotation speed of the unwinding reel shaft is always low, connect the input side of the powder clutch to the motor.
When the reel diameter at the start of unwinding is large and sufficient slip rotation speed can be obtained during almost all operation time though the rotation speed is temporarily low at the start of unwinding, connect the output side of the powder clutch to the motor.

[Example of selecting the reverse rotation input]

This paragraph shows an example of actually selecting the powder clutch and geared motor for revere rotation on the unwinding side.

◆ When the line speed is low.

V:1 to 5 m/min

■ Selection result: Powder brake

Conditions

Tension	F : 40 to 80 [N]
Reel diameter	D : 75 to 250 [mm]
Line speed	V : 1 to 5 [m/min]

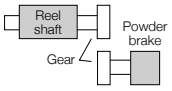

Reel shaft

Torque	T : 1.500 to 10.00 [Nm]
Rotation speed	N : 1.3 to 21.2 [r/min]
Approximate heat generation quantity per unit time caused by slip	P : MAX 6.7 [W]

Torque $T = \frac{D[m] \times F[N]}{2}$

Rotation speed $N = \frac{V[m/min]}{3.14 \times D[m]}$

Heat generation quantity per unit time caused by slip $P = 0.0167 \times Fmax[N] \times Vmax[m/min]$

Gear ratio $R = \frac{\text{Brake shaft rotation speed}}{\text{Reel shaft rotation speed}}$

Recommended model

Model name : ZKB-1.2XN

Gear ratio R : 1

Model data Torque : 0.12 to 12 [Nm]

Rotation speed : 5 to 1800 [r/min]

Allowable heat generation quantity per unit time caused by slip : 95 to 140 [W]

Brake shaft

Torque	Tb : 1.500 to 10.00 [Nm] (12.5 to 83.3[%])
Rotation speed on output side	Nb : 1.3 to 21.2 [r/min]
Heat generation quantity per unit time caused by slip	P : MAX 6.7 [W]
Allowable heat generation quantity per unit time caused by slip	Pp : 95.5 [W] at 6.4 [r/min]

Calculation check

Tmin	Tmax
Good	*Good*
Nmin	Nmax
Bad	*Good*
	Pmax
	Good

Change the conditions, and select the model again.

Cooling method

Natural cooling

◆ Rotation speed on the output side

Reverse rotation input is effective!

Minimum value $Nmin$

"1.3 r/min < 5 r/min" ... NG

■ Selection result: Powder brake (Reverse rotation input)

Conditions

Tension	F : 40 to 80 [N]
Reel diameter	D : 75 to 250 [mm]
Line speed	V : 1 to 5 [m/min]

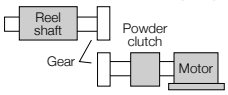

Reel shaft

Torque	T : 1.500 to 10.00 [Nm]
Rotation speed	N : 1.3 to 21.2 [r/min]
Approximate heat generation quantity per unit time caused by slip	P : MAX 6.7 [W]

Note: Because the rotation speed is too low, use a clutch with reverse rotation input.

Torque $T = \frac{D[m] \times F[N]}{2}$

Rotation speed $N = \frac{V[m/min]}{3.14 \times D[m]}$

Heat generation quantity per unit time caused by slip $P = P0(\text{Unwinding quantity}) + P1(\text{Reverse rotation input})$

$P0 = 0.0167 \times Fmax[N] \times Vmax[m/min]$

$P1 = 0.105 \times No[r/min] \times Tmax[Nm]$

Gear ratio $R = \frac{\text{Clutch shaft rotation speed}}{\text{Reel shaft rotation speed}}$

Recommended model

Model name : ZKB-1.2BN

Gear ratio R : 1

Model data Torque : 0.12 to 12 [Nm]

Rotation speed : 5 to 1800 [r/min]

Allowable heat generation quantity per unit time caused by slip : 95 to 140 [W]

Clutch shaft

Reverse rotation input	No : 5.0 to 91.0 [r/min]
Torque	Tc : 1.500 to 10.00 [Nm] (12.5 to 83.3[%])
Rotation speed on output side	Nc : 1.3 to 21.2 [r/min]
Heat generation quantity per unit time caused by slip	P : 11.9 to 102.2 [W]
Allowable heat generation quantity per unit time caused by slip	Pp : 95.4 to 102.3 [W]

Note: Set the clutch input freely in the above range.

Calculation check

Tmin	Tmax
Good	*Good*
	Nmax
	Good
Pmin	Pmax
Good	*Good*

The selection is OK.

Cooling method

Natural cooling

● In the case of unwinding

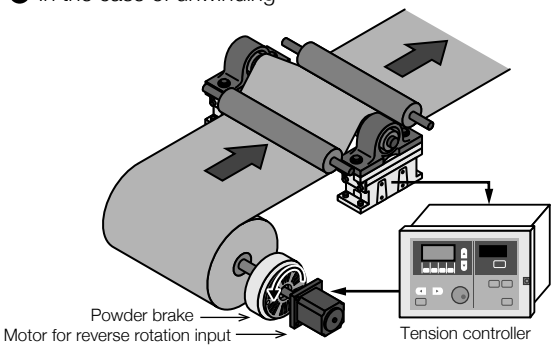

First, select the powder brake for unwinding.
As the result of calculation in the above conditions, no powder brake is available because there is an area where the rotation speed on the output side of the brake shaft is lower than the minimum rotation speed "5 r/min".
In such a case, reverse rotation input is effective.

Perform the calculation using the same conditions as the previous calculation.
In these conditions, the model ZKB-1.2BN is recommended.

[Selection of the geared motor for reverse rotation input]

■ Selection result: Powder brake (Reverse rotation input)

Conditions

Tension	F : 40 to 80 [N]
Reel diameter	D : 75 to 250 [mm]
Line speed	V : 1 to 5 [m/min]

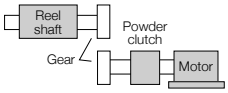

Reel shaft

Torque	T : 1.500 to 10.00 [Nm]
Rotation speed	N : 1.3 to 21.2 [r/min]
Approximate heat generation quantity per unit time caused by slip	P : MAX 6.7 [W]

Note: Because the rotation speed is too low, use a clutch with reverse rotation input.

Torque $T = \frac{D[m] \times F[N]}{2}$

Rotation speed $N = \frac{V[m/min]}{3.14 \times D[m]}$

Heat generation quantity per unit time caused by slip: P = P0 (Unwinding quantity) + P1 (Reverse rotation input)
P0 = 0.0167 × Fmax[N] × Vmax[m/min]
P1 = 0.105 × No[r/min] × Tmax[Nm]

Gear ratio $R = \frac{\text{Clutch shaft rotation speed}}{\text{Reel shaft rotation speed}}$

Recommended model

Model name : ZKB-1.2BN
Gear ratio R : 1

Model data
Torque : 0.12 to 12 [Nm]
Rotation speed : 5 to 1800 [r/min]
Allowable heat generation quantity per unit time caused by slip : 95 to 140 [W]

Clutch shaft

Reverse rotation input	No : 5.0 to 91.0 [r/min]
Torque	Tc : 1.500 to 10.00 [Nm] (12.5 to 83.3[%])
Rotation speed on output side	Nc : 1.3 to 21.2 [r/min]
Heat generation quantity per unit time caused by slip	P : 11.9 to 102.2 [W]
Allowable heat generation quantity per unit time caused by slip	Pp : 95.4 to 102.3 [W]

Note: Set the clutch input freely in the above range.

Calculation check

Tmin	Tmax
Good	*Good*
	Nmax
	Good
Pmin	Pmax
Good	*Good*

The selection is OK.

Cooling method

Natural cooling

Focus points

- Reverse rotation input No $5.0\ to\ 91.0\ r/min$
- Torque Tc $1.500\ to\ 10.00\ Nm$

Next, select the geared motor for reverse rotation input. Focus points for selecting the motor are rotation speed and required torque.

Clutch specifications	Geared motor specifications

■ Clutch input No

$5.0\ to\ 91.0\ r/min$ → $5 <$ Output side $< 91\ r/min$
Rotation speed

■ Torque Tc

$1.500\ to\ 10.00\ Nm$ → Allowable torque of output shaft
$10.00 \times 2 = 20\ Nm$ or more
└ Safety factor

Select a model so that the rotation speed is within the reverse rotation input range (5 to 91 r/min in this case) and the required torque is the maximum torque (10 Nm in this case) or more of the clutch. It is recommended that the motor torque is twice or more the maximum torque of the clutch under consideration of the margin.
When the rotation speed and torque of the motor are determined, determine the output and reduction ratio in reference to the motor characteristics table.
As an example, select a geared motor from the characteristics table of the geared motor GM-S.

[GM-S characteristics table]

Output (kW)	Rotation speed of output shaft (r/min)		Nominal reduction ratio	Actual reduction ratio	Allowable torque of output shaft (Nm)	
	50 Hz	60 Hz			50 Hz	60 Hz
0.2	500	600	1/3	1/3.07	3.5	2.9
	300	360	1/5	1/4.97	5.9	4.9
	150	180	1/10	1/9.93	12	9.8
	100	120	1/15	1/14.81	18	15
	75	90	1/20	1/20.08	24	20
	60	72	1/25	1/23.85	29	25
	50	60	1/30	1/28.88	33	29
	37.5	45	1/40	1/41.07	47	39
	30	36	1/50	1/48.96	59	49
	⋮					

[Geared motor selection result]

Output: 0.2 kW
Reduction ratio: 1/20

● What is constant-slip control?

■ Winding side (Powder clutch)

Constant-slip control is effective when the allowable heat generation quantity per unit time caused by slip is smaller than the heat generation quantity per unit time caused by slip during operation.

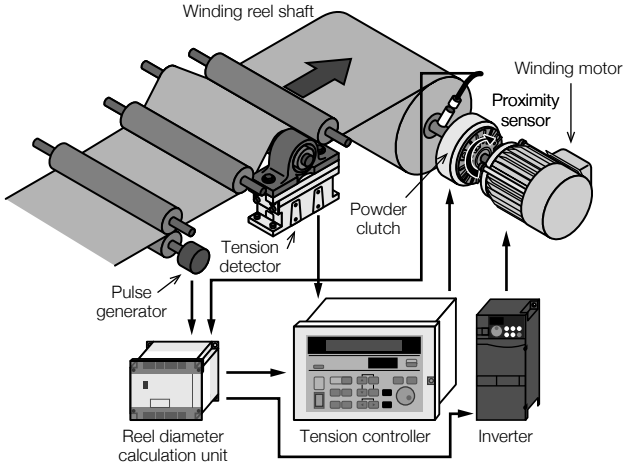

Constant-slip control is effective when there is no proper powder clutch model for the winding side because the allowable heat generation quantity per unit time caused by slip is exceeded.
Powder clutches are often used for controlling the tension of various winding machines, there is no proper model in some cases because the heat generation during operation exceeds the allowable heat generation quantity per unit time caused by slip of any powder clutch. In such a case, the heat generation quantity per unit time caused by slip can be reduced by decreasing the input rotation speed of the powder clutch using the inverter and tension controller.
In this method, the inverter is controlled by the speed output signal, and the input rotation speed of the powder clutch is decreased as the reel diameter becomes larger to achieve constant slip.

[Selection example in constant-slip control]

◆ When the line speed is low

V:50 *to* 150 *m/min*

This paragraph shows an example of selecting constant-slip control.
First, select the powder clutch for winding.
As the result of calculation in these conditions, no powder clutch can be selected because the heat generation quantity per unit time caused by slip exceeds the allowable heat generation quantity per unit time caused by slip.
In such a case, constant-slip control is effective.

■ Selection result: Powder clutch

Conditions

Tension	F : 200 to 400 [N]
Reel diameter	D : 75 to 250 [mm]
Line speed	V : 50 to 150 [m/min]
Taper ratio	a : 0

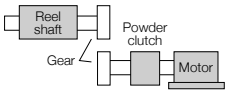

Reel shaft

Torque	T : 7.500 to 50.00 [Nm]
Rotation speed	N : 63.7 to 636.9 [r/min]
Approximate heat generation quantity per unit time caused by slip	P : MAX 3084.7 [W]

Torque $T = \frac{D[m] \times F[N]}{2} \times (1-a)$

Rotation speed $N = \frac{V[m/min]}{3.14 \times D[m]}$

Heat generation quantity per unit time caused by slip $P1 = 0.105 \times [No-Nmin] \times Tcmax$

Gear ratio $R = \frac{\text{Clutch shaft rotation speed}}{\text{Reel shaft rotation speed}}$

Taper ratio $R = \frac{\text{Tension at winding start} - \text{Tension at winding end}}{\text{Tension at winding start}}$

Recommended model

Model name : ZKB-40BN (Forced air cooling)
Gear ratio R : 1

Model data
Torque : 4 to 400 [Nm]
Rotation speed : 5 to 1800 [r/min]
Allowable heat generation quantity per unit time caused by slip : 2800 to 2800 [W]

Clutch shaft

Clutch input	No : 641.9 to 642.0 [r/min]
Torque	Tc : 7.500 to 50.00 [Nm] (1.9 to 12.5[%])
Rotation speed on output side	Nc : 63.7 to 636.9 [r/min]
Heat generation quantity per unit time caused by slip	P : 3035.8 to 3036.1 [W]
Allowable heat generation quantity per unit time caused by slip	Pp : 2800.0 to 2800.0 [W]

Note: Set the clutch input freely in the above range.

Calculation check

Tmin	Tmax
Good	*Good*
	Nmax
	Good
Pmin	Pmax
Bad	*Bad*

Cooling method

Forced air cooling (Air: 20 × 10^4 Pa = 2 m^3/min)

Caution

- Closed-loop control (feedback control) is recommended because the powder clutch may be used with the torque of 5% or less.
- Minimize the mechanical loss as much as possible because the powder clutch may be used in the low torque area.
- Air piping, etc. is required separately

◆ Rotation speed on the output side

Constant-slip control is effective!

Allowable heat generation quantity per unit time caused by slip (2800 W)	<	Heat generation quantity per unit time caused by slip (3035.8 W)

■ Selection result: Powder clutch (Constant slip)

Conditions

Tension	F : 200 to 400 [N]
Reel diameter	D : 75 to 250 [mm]
Line speed	V : 50 to 150 [m/min]
Taper ratio	a : 0

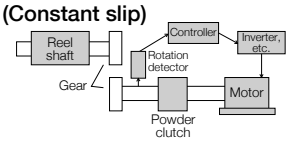

Reel shaft

Torque	T : 7.500 to 50.00 [Nm]
Rotation speed	N : 63.7 to 636.9 [r/min]
Approximate heat generation quantity per unit time caused by slip	P : MAX 3084.7 [W]

Note: Because the heat generation quantity per unit time caused by slip is too large, change the input rotation speed using the inverter, etc. when using the powder clutch.

Torque $T = \frac{D[m] \times F[N]}{2} \times (1-a)$

Rotation speed $N = \frac{V[m/min]}{3.14 \times D[m]}$

Heat generation quantity per unit time caused by slip $P1 = 0.105 \times [No-Nmin] \times Tcmax$

Gear ratio $R = \frac{\text{Clutch shaft rotation speed}}{\text{Reel shaft rotation speed}}$

Taper ratio $R = \frac{\text{Tension at winding start} - \text{Tension at winding end}}{\text{Tension at winding start}}$

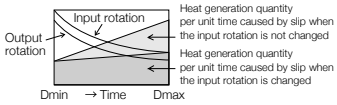

Recommended model

Recommended model

Model name : ZKB-5BN	Model data	Torque	: 0.5 to 50 [Nm]
Gear ratio R : 1		Rotation speed	: 5 to 1800 [r/min]
		Allowable heat generation quantity per unit time caused by slip	: 180 to 360 [W]

Clutch shaft

Slip rotation speed	No : 5.0 to 40.0 [r/min]
Torque	Tc : 7.500 to 50.00 [Nm] (15.0 to 100.0 [%])
Rotation speed on output side	Nc : 63.7 to 636.9 [r/min]
Heat generation quantity per unit time caused by slip	P : 26.3 to 210.0 [W]
Allowable heat generation quantity per unit time caused by slip	Pp : 200.6 to 210.8 [W]

Note: Control the input rotation speed so that the slip rotation speed is within the above range.

Calculation check

Tmin	Tmax
Good	*Good*
	Nmax
	Good
Pmin	Pmax
Good	*Good*

The slection is OK.

<Constant-slip control>

Perform the calculation using the same conditions as the previous calculation.

In these conditions, the model ZKB-5BN is recommended.

[Selection example of motor for constant-slip control]

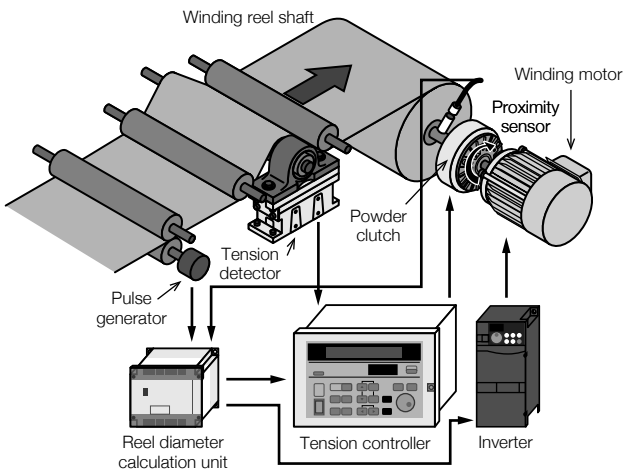

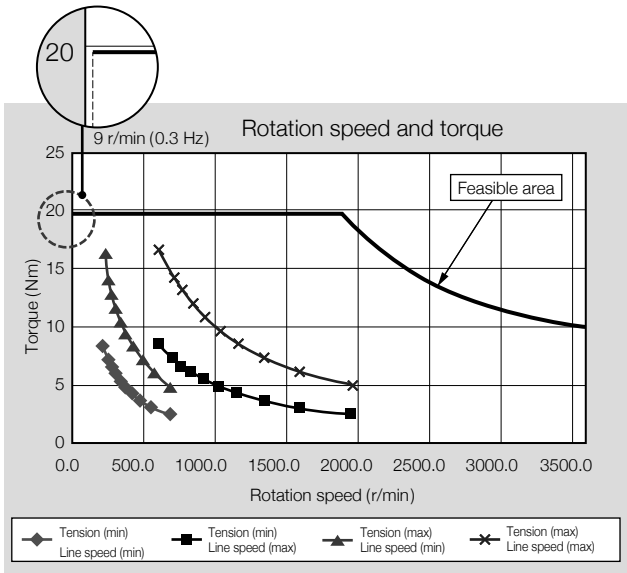

(1) Motor capacity

$$P = \frac{0.0167 \times Vmax \times Fmax \times Dmax}{Dmin} = \frac{0.0167 \times 150 \times 400 \times 0.25}{0.075} = 3340\ W$$

(2) Winding reel shaft torque

$$T = \frac{F \times D}{2} = \frac{(200 \text{ to } 400) \times (0.075 \rightarrow 0.25)}{2} = 7.5 \text{ to } 50\ Nm$$

(3) Winding reel shaft rotation speed

$$N = \frac{V}{(\pi \times D)} = \frac{(50 \text{ to } 150)}{(3.14 \times (0.075 \rightarrow 0.25))} = 63.7 \text{ to } 637\ r/min$$

(4) Motor shaft rotation speed

Suppose that the slip rotation speed of the clutch is 30 r/min

$$Nm = N + 30 = (63.7\ to\ 637) + 30 = 93.7\ to\ 667\ r/min$$

(5) Temporarily selecting the motor

Motor capacity : 3340 W → Rated output: 3.7 kW
Motor : SF-HRCA-3.7 K
Inverter : FR-A720-3.7 K
Rated torque : 19.6 Nm (Available torque ratio: 1:50)
Rotation speed : 3600 r/min maximum
(Rated rotation speed: 1800 r/min)
(Available rotation speed ratio: 1:100)

(6) Setting the gear ratio R

[1] From the required torque

$$Rt = \frac{\text{Winding reel shaft torque } (max)}{\text{Motor rated torque}} = \frac{50}{19.6} = 2.55 \text{ or more should be set.}$$

[2] From the rotation speed setting

$$\frac{\text{Motor rotation speed } (max)}{\text{Motor shaft rotation speed } (max)}$$

$$Rn = \frac{3600}{667} = 5.4 \text{ or less should be set.}$$

$$Rt < R < Rn$$

$$2.55 < R < 5.4 \rightarrow Set\ R\ to\ "3".$$

(7) Motor shaft torque

$$T' = T \times \frac{1}{R} = \frac{(7.5 \text{ to } 50)}{3} = 2.5 \text{ to } 16.7\ Nm$$

12.8 to 85.2% of the rated torque

(8) Motor shaft rotation speed

N' = N×R = (667 to 93.7) × 3 = 281.1 to 2001 r/min

7.8 to 55.6% of the maximum rotation speed

■ 6-8-3 Motor available only in combination with the inverter (for torque control)

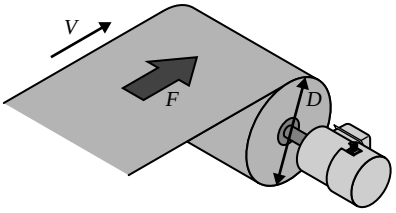

Use condition	
Tension (F)	50 to 100 N
Reel diameter (D)	90 to 500 mm
Line speed (V)	100 to 200 m/min

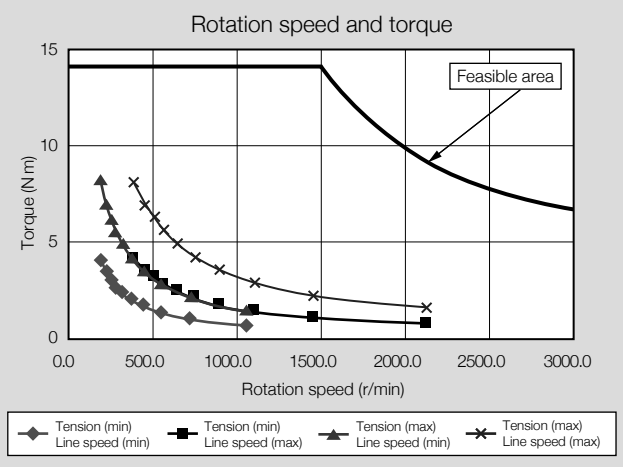

(1) Motor capacity

$$P = \frac{0.0167 \times Vmax \times Fmax \times Dmax}{Dmin} = \frac{0.0167 \times 200 \times 100 \times 0.5}{0.09} = 1856\ W$$

(2) Winding reel shaft torque

$$T = \frac{F \times D}{2} = \frac{(50\ \text{to}\ 100) \times (0.09 \rightarrow 0.5)}{2} = 2.3\ \text{to}\ 25\ Nm$$

(3) Winding reel shaft rotation speed

$$N = \frac{V}{(\pi \times D)} = \frac{(100\ \text{to}\ 200)}{(3.14 \times (0.09 \rightarrow 0.5))} = 63.6\ \text{to}\ 07\ r/min$$

(4) Temporarily selecting the motor

Motor capacity : 1856 W → Rated output: 2.2 kW
Motor : SF-V5RU2K Vector control
Inverter : FR-A740-3.7K
Rated torque : 14.1 Nm (Available torque ratio: 1:50)
Rotation speed : 3000 r/min maximum
(Rated rotation speed: 1500 r/min)
(Available rotation speed ratio: 1:1500)

(5)Setting the gear ratio R

[1] From the required torque

$$Rt = \frac{\text{Winding reel shaft torque } (max)}{\text{Motor rated torque}} = \frac{25}{14.1} = 1.77 \text{ or more should be set.}$$

[2] From the rotation speed setting

$$\frac{\text{Motor rotation speed } (max)}{\text{Motor shaft rotation speed } (max)}$$

$$Rn = \frac{3000}{707} = 4.24 \text{ or less should be set.}$$

$$Rt < R < Rn$$

$$1.77 < R < 4.24 \rightarrow Set\ R\ to\ "3".$$

(6) Motor shaft torque

$$T' = T \times \frac{1}{R} = \frac{(2.3\ \text{to}\ 25)}{3} = 0.8\ \text{to}\ 8.3\ Nm$$

5.6 to 58.9% of the rated torque

(7) Motor shaft rotation speed

$$N' = N \times R = (63.6\ to\ 707) \times 3 = 191\ to\ 2121\ r/min$$

6.4 to 70.7% of the maximum rotation speed

(8) Regenerative resistor

A regenerative resistor may be required when the motor available only in combination with the inverter is used for unwinding.

Regenerative power

$$PR = 0.0167 \times Vmax \times Fmax = 0.0167 \times 200 \times 100 = 334\ W$$

Resistor unit GRZG300-5Ω
(Allowable continuous power: 600 W)

■ 6-8-4 AC servo motor (for torque control)

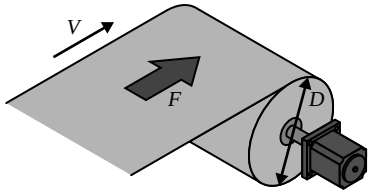

Use condition	
Tension (F)	50 to 100 N
Reel diameter (D)	90 to 500 mm
Line speed (V)	100 to 200 m/min

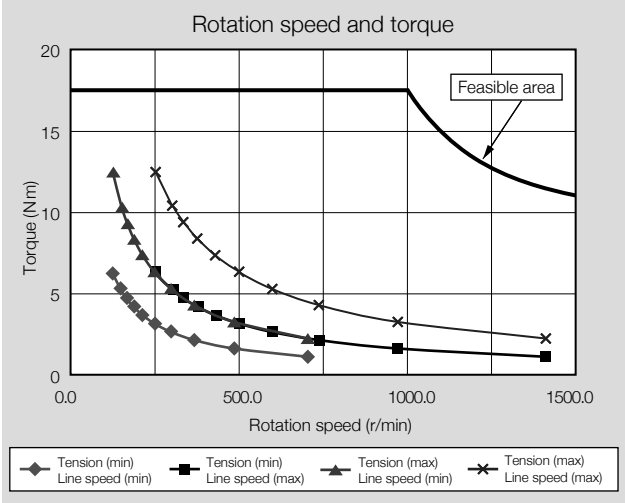

(1) Motor capacity

$$P = \frac{0.0167 \times Vmax \times Fmax \times Dmax}{Dmin} = \frac{0.0167 \times 200 \times 100 \times 0.5}{0.09} = 1856\ W$$

(2) Winding reel shaft torque

$$T = \frac{F \times D}{2} = \frac{(50\ \text{to}\ 100) \times (0.09 \rightarrow 0.5)}{2} = 2.3\ \text{to}\ 25\ Nm$$

(3) Winding reel shaft rotation speed

$$N = \frac{V}{(\pi \times D)} = \frac{(100\ \text{to}\ 200)}{(3.14 \times (0.09 \rightarrow 0.5))} = 63.6\ \text{to}\ 707\ r/min$$

(4) Temporarily selecting the motor

Motor capacity : 1856 W → Rated output: 2.0 kW
Motor : HG-SR201
amplifier : MR-J4-200A
Rated torque : 19.1 Nm (Available torque ratio: 1:100)
Rotation speed : 1500 r/min maximum
(Available rotation speed ratio: 1:1500)

(5)Setting the gear ratio R

[1] From the required torque

$$Rt = \frac{\text{Winding reel shaft torque } (max)}{\text{Motor rated torque}} = \frac{25}{19.1} = 1.3 \text{ or more should be set.}$$

[2] From the rotation speed setting

$$\frac{\text{Motor rotation speed } (max)}{\text{Motor shaft rotation speed } (max)}$$

$$Rn = \frac{1500}{707} = 2.12 \text{ or less should be set.}$$

$$Rt < R < Rn$$

$$1.3 < R < 2.12 \rightarrow Set\ R\ to\ "2".$$

(6) Motor shaft torque

$$T' = T \times \frac{1}{R} = \frac{(2.3\ \text{to}\ 25)}{2} = 1.15\ \text{to}\ 12.5\ Nm$$

6.0 to 65.4% of the rated torque

(7) Motor shaft rotation speed

$$N' = N \times R = (63.6\ to\ 707) \times 2 = 127\ to\ 1414\ \ r/min$$

8.4 to 94.2% of the maximum rotation speed

(8) Regenerative resistor

A regenerative resistor may be required when the motor available only in combination with the AC servo motor is used for unwinding.

Regenerative power

$$PR = 0.0167 \times Vmax \times Fmax = 0.0167 \times 200 \times 100 = 334\ W$$

Regenerative resistor built in the MR-J4-200A: 100 W
Accordingly, the external regenerative resistor MR-RB30 (Allowable regenerative power: 300 W) is required.

■ 6-8-5 Motor available only in combination with the inverter (for speed control)

[In the case of unwinding]

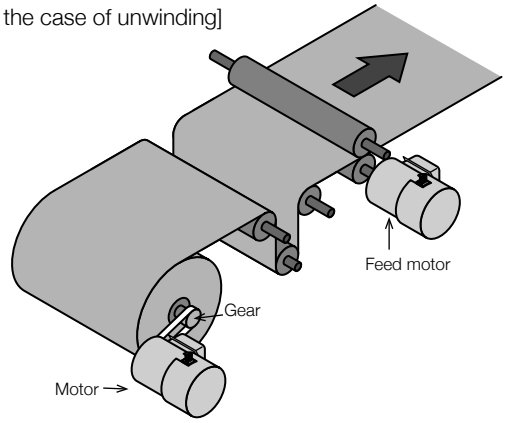

[In the case of winding]

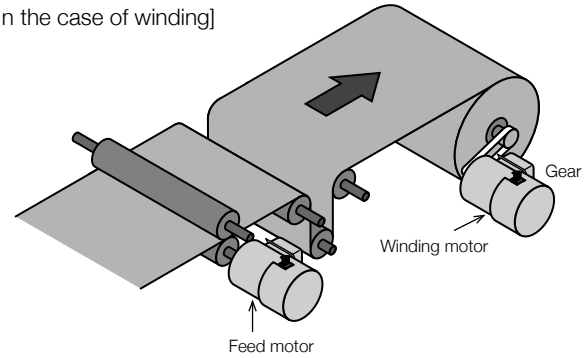

Use condition	
Tension (F)	100 to 200 N
Reel diameter (D)	90 to 500 mm
Line speed (V)	200 to 300 m/min
Acceleration/deceleration time (t)	20 sec
Maximum reel shaft inertia moment (I)	15 kgm^2

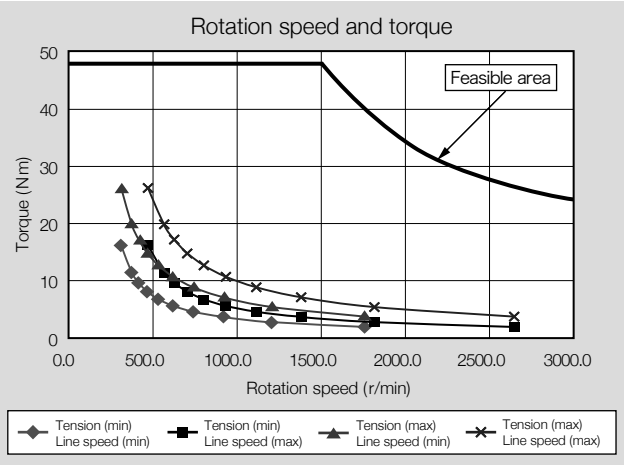

(1) Motor capacity

$$P = \frac{0.0167 \times Vmax \times Fmax \times Dmax}{Dmin} = \frac{0.0167 \times 300 \times 200 \times 0.5}{0.09} = 5566\ W$$

(2) Required torques

[1] Shaft torque

$$T = \frac{F \times D}{2} = \frac{(100 \text{ to } 200) \times (0.09 \rightarrow 0.5)}{2} = 4.5 \text{ to } 50\ Nm$$

[2] Torque generated by acceleration/deceleration

$$T2max = I \times \alpha = 15 \times 1 = 15\ Nm$$

Angular acceleration:α angular speed:ω

$$\alpha = \frac{\omega}{t} = \frac{(2\pi \times N/60)}{t} = \frac{(2\pi \times 191/60)}{20} = 1\ rad/s^2$$

[3] Torque required in the reel shaft

$$T = T1max + T2max = 50 + 15 = 65\ Nm$$

(3) Winding reel shaft rotation speed

$$N = \frac{V}{(\pi \times D)} = \frac{(200 \text{ to } 300)}{(3.14 \times (0.09 \rightarrow 0.5))} = 127 \text{ to } 1061\ r/min$$

(4) Temporarily selecting the motor

Motor capacity : 5566 W → Rated output: 7.5 kW
Motor : SF-V5RU7K
Inverter : FR-A720-11K
Rated torque : 47.7 Nm (Available torque ratio: 1:20)
Rotation speed : 3000 r/min maximum
(Rated rotation speed: 1500 r/min)
(Available rotation speed ratio: 1:200)

(5) Setting the gear ratio R

[1] From the required torques

$$Rt = \frac{\text{Winding reel shaft torque } (max)}{\text{Motor rated torque}} = \frac{65}{47.7} = 1.36 \text{ or more should be set.}$$

[2] From the rotation speed setting

$$\frac{\text{Motor rotation speed } (max)}{\text{Motor shaft rotation speed } (max)}$$

$$Rn = \frac{3000}{1061} = 2.82 \text{ or less should be set.}$$

$$Rt < R < Rn$$

$$1.36 < R < 2.82 \rightarrow Set\ R\ to\ "2.5".$$

(6) Motor shaft torque

$$T' = T \times \frac{1}{R} = \frac{(4.5 \text{ to } 65)}{2.5} = 1.8 \text{ to } 26\ Nm$$

3.7 to 54.5% of the rated torque

(7) Motor shaft rotation speed

$$N' = N \times R = (12\ to\ 1061) \times 2.5 = 318\ to\ 2653\ r/min$$

10.6 to 88.4% of the maximum rotation speed

■ 6-8-6 AC servo motor (for speed control)

[In the case of unwinding]

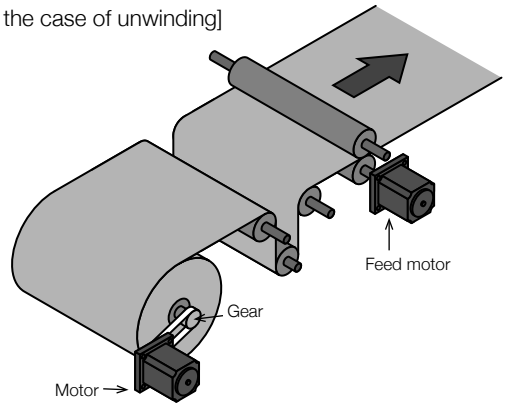

[In the case of winding]

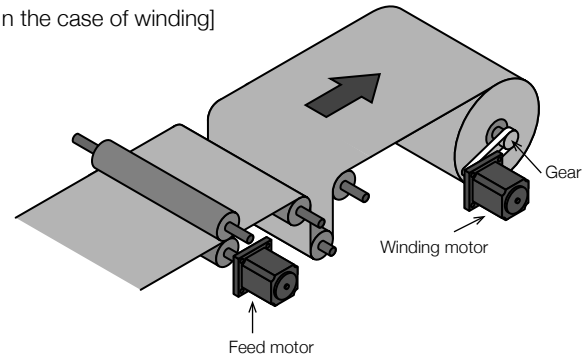

Use condition	
Tension (F)	100 to 200 N
Reel diameter (D)	90 to 500 mm
Line speed (V)	200 to 300 m/min
Acceleration/deceleration time (t)	20 sec
Maximum reel shaft inertia moment (I)	15 kgm²

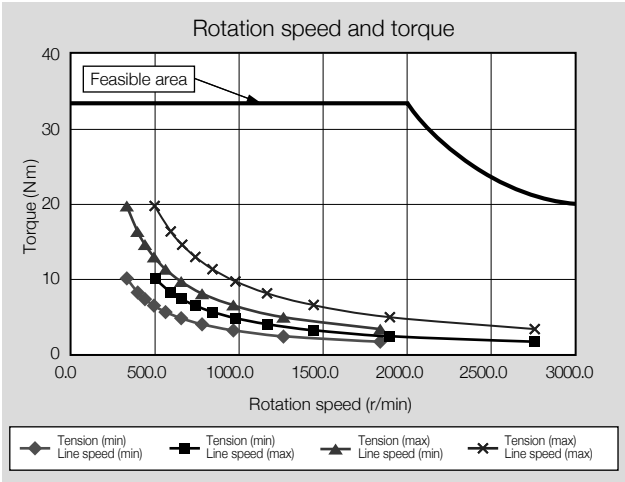

(1) Motor capacity

$$P = \frac{0.0167 \times Vmax \times Fmax \times Dmax}{Dmin} = \frac{0.0167 \times 300 \times 200 \times 0.5}{0.09} = 5566\ W$$

(2) Required torques

[1] Shaft torque

$$T = \frac{F \times D}{2} = \frac{(100 \text{ to } 200) \times (0.09 \rightarrow 0.5)}{2} = 4.5 \text{ to } 50\ Nm$$

[2] Torque generated by acceleration/deceleration

$$T2max = I \times \alpha = 1.5 \times 1 = 1.5\ Nm$$

$$Angular\ acceleration{:}\alpha \quad angular\ speed{:}\omega$$

$$\alpha = \frac{\omega}{t} = \frac{(2\pi \times N/60)}{t} = \frac{(2\pi \times 191/60)}{20} = 1\ rad/s^2$$

[3] Torque required in the reel shaft

$$T = T1max + T2max = 50 + 1.5 = 51.5\ Nm$$

(3) Winding reel shaft rotation speed

$$N = \frac{V}{(\pi \times D)} = \frac{(200 \text{ to } 300)}{(3.14 \times (0.09 \rightarrow 0.5))} = 127 \text{ to } 1061\ r/min$$

(4) Temporarily selecting the motor

Motor capacity : 5566 W → Rated output: 7 kW
Motor : HF-SP702
Inverter : MR-J3-700
Rated torque : 33.4 Nm (Available torque ratio: 1:100)
Rotation speed : 3000 r/min maximum
(Rated rotation speed: 2000 r/min)
(Available rotation speed ratio: 1:50)
Motor inertia moment : 154×10^{-4} kgm² (0.0154 kgm²)
Recommended load inertia moment ratio : 15 times or less

(5) Setting the gear ratio R

[1] From the required torques

$$Rt = \frac{\text{Winding reel shaft torque } (max)}{\text{Motor rated torque}} = \frac{51.5}{33.4} = 1.54 \text{ or more should be set.}$$

[2] From the rotation speed setting

$$\frac{\text{Motor rotation speed } (max)}{\text{Motor shaft rotation speed } (max)}$$

$$Rn = \frac{3000}{1061} = 2.82 \text{ or less should be set.}$$

$$Rt < R < Rn$$

$$1.54 < R < 2.82 \rightarrow Set\ R\ to\ "2.6".$$

(6) Motor shaft torque

$$T' = T \times \frac{1}{R} = \frac{(4.5 \text{ to } 51.5)}{2.6} = 1.7 \text{ to } 19.8\ Nm$$

5.4 to 66.5% of the rated torque

(7) Motor shaft rotation speed

$$N' = N \times R = (127\ to\ 1061) \times 2.6 = 330\ to\ 2759\ r/min$$

11 to 92% of the maximum rotation speed

(8) Load inertia moment ratio

$$\frac{\text{Load shaft inertia moment ratio}}{R^2} < \text{(Motor inertia moment) x (Load inertia moment ratio)}$$

$$\frac{1.5}{2.6^2} < 0.0154 \times 15$$

$$0.221 < 0.231 \rightarrow OK$$

Important point!

When selecting an actuator …

First, learn the features of various actuators, identify the machine specifications, and then select a proper actuator. Next, perform detailed calculations for selection, and check whether the temporarily selected actuator meets the intended specifications. It is necessary to examine actuators carefully because the largest factor of determining the machine performance and economic efficiency is selection of a proper actuator.

Chapter.7

Basis of Tension Control System Construction

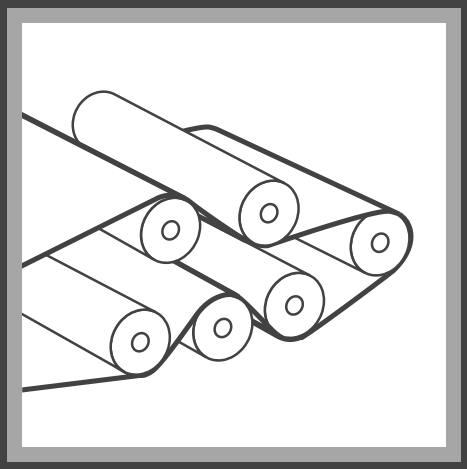

Chapter 7

Basis of Tension Control System Construction

For constructing the actual tension control system, it is necessary to set the machine specifications suitable for each material and constructing such a system as to realize the machine specifications.
The machine specifications are different when the material is different, and the system configuration is considerably different when the machine specifications are different.

7-1 Basic tension control system

■ 7-1-1 System having only the unwinding section and winding section

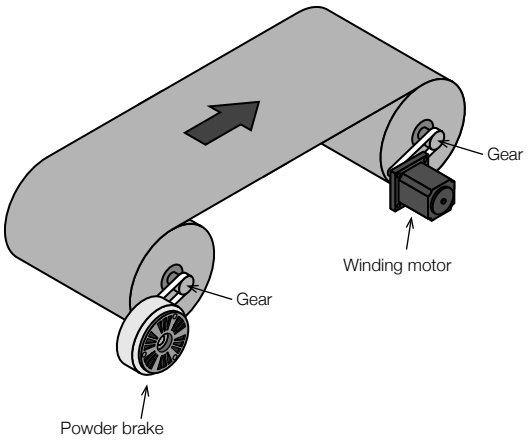

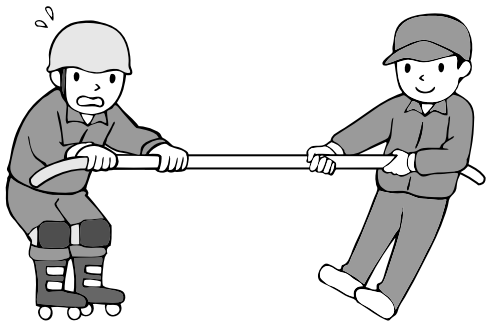

The simplest tension control system is a machine which unwinds and winds a material. In such a system, the speed should be controlled in either the unwinding section or winding section regarded as the pulling side, and the other section should be controlled as the pulled side. The pulling side works as the main shaft in the system.

In the system shown in the left figure, the unwinding section is controlled by the powder brake. The powder brake is an actuator designed for torque control, and can work only as the pulled side. Accordingly, the tension should be controlled on the unwinding section. On the other hand, the winding motor should control the speed so that the peripheral speed of the wound material is kept constant even if the reel diameter changes.

The winding section working as the pulling side can be controlled by the torque or speed. Even if several free rollers are installed in the intermediate section, the tension from the unwinding section to the winding section is determined by the result of unwinding control in this system.

● Configuration example

In the configuration without intermediate shafts, either the winding reel shaft or the unwinding reel shaft is controlled by the torque, and the other shaft is controlled by the speed.
In the example (1), the unwinding reel shaft is controlled by the torque, and the winding reel shaft is controlled by the speed.
In the example (2), the unwinding reel shaft is controlled by the speed, and the winding reel shaft is controlled by the torque.
Actuators for torque control are powder clutches/brakes, servo motors (in the torque control mode), inverters/motors (equipped with encoder), etc. Actuators for speed control are servo motors (in the speed control mode), inverters/motors (not equipped with encoder), etc. The regenerative unit is required separately when the motor is used on the regenerative side (for braking).

(1) Unwinding side: Torque control, winding side: Speed control

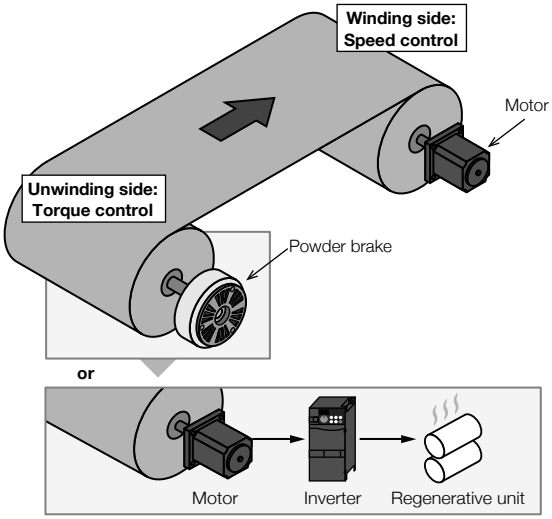

(2) Unwinding side: Speedcontrol, winding side: Torque control

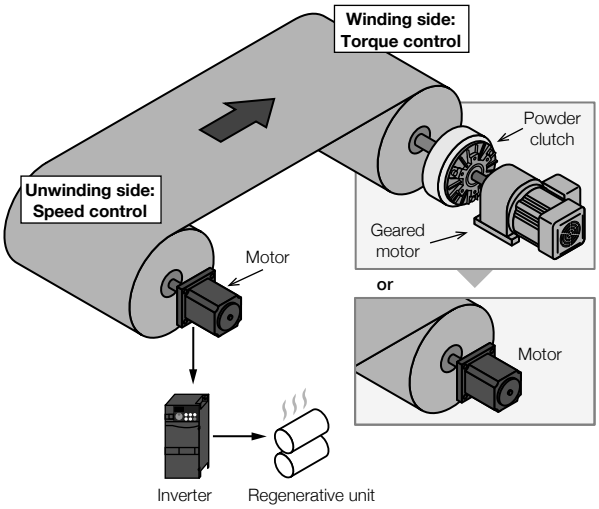

■ 7-1-2 System having the intermediate main shaft

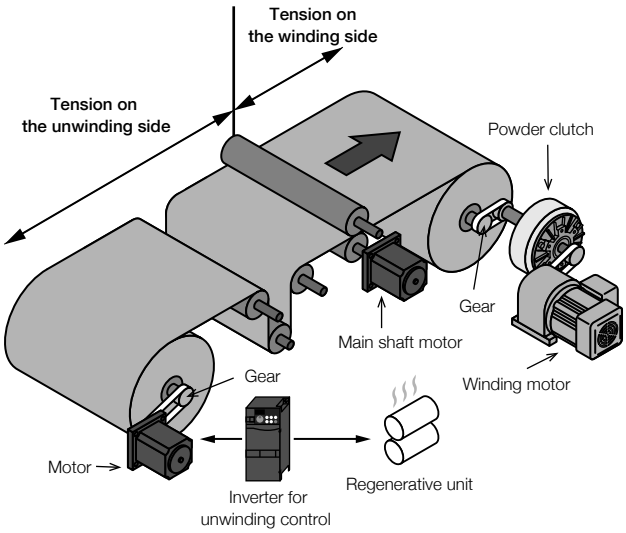

The left figure shows the basic tension control system in which the main shaft is added in the intermediate section of the machine shown in Subsection 7.1.1. The intermediate nip roll keeps the material speed constant.
The material speed can become uneven due to the eccentricity of the wound material in the machine shown in Subsection 7.1.1. On the other hand, the material speed is stable in this system because the external shape of the nip roll installed in the intermediate section does not change.
In this system, the control should be such that the main shaft works as the pulling side in the relationship between the unwinding reel shaft and the main shaft and between the winding shaft and the main shaft. The control method can be determined freely for the winding reel shaft which winds the material fed from the unwinding reel shaft (pulled side) or main shaft.
In the left figure, the unwinding reel shaft is controlled by the speed using the dancer roll and inverter, and the winding reel shaft is controlled by the torque using the powder clutch. The tension is constant from unwinding to winding in the machine shown in Subsection 7.1.1, but the tension for unwinding (from the main shaft to the unwinding reel shaft) and tension for winding (from the main shaft to the winding reel shaft) can be controlled separately in this system.

● A weak main shaft making the entire system unstable

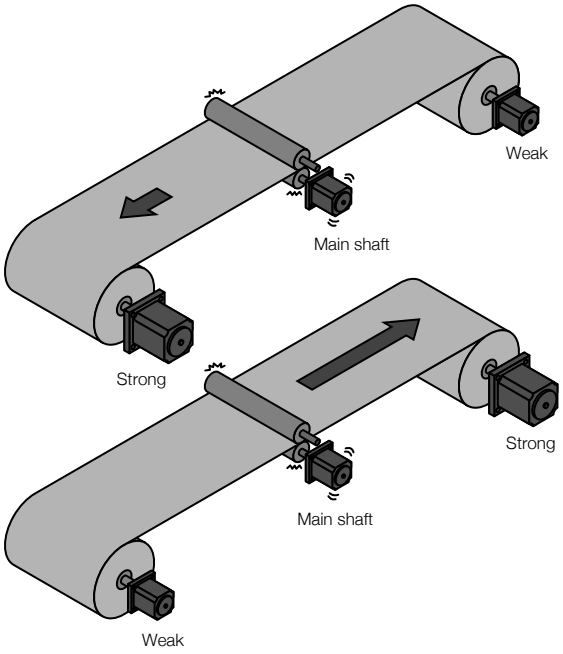

The main shaft is controlled by the speed. If the driving force of the main shaft is insufficient, the material speed may be unstable due to changes in the tension for unwinding or winding. In addition, the force caused by the inertia of the entire machine is applied on the main shaft during acceleration or deceleration.

● Installing a main shaft having the force to support the entire system

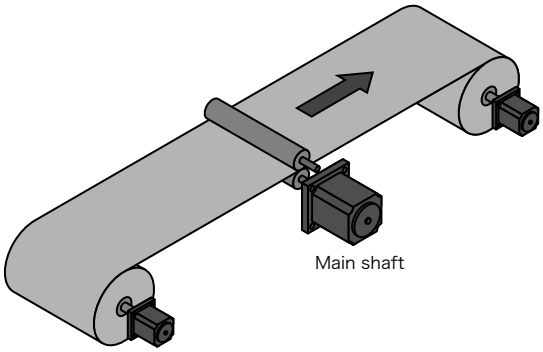

Accordingly, the main shaft should have such a driving force as to control the material stably at a constant speed even if the tension for unwinding or winding changes or if the effect of acceleration or deceleration of the machine is given.

● Configuration example

In the system having the intermediate main shaft, control the unwinding reel shaft and winding reel shaft by the torque or speed, and control the intermediate shaft by the speed. Four types of combination are available as shown below. Actuators for torque control are powder clutches/brakes, servo motors (in the torque control mode), inverters/motors (equipped with encoder), etc. Actuators for speed control are servo motors (in the speed control mode), inverters/motors (not equipped with encoder), etc. The regenerative unit is required separately when the motor is used on the regenerative side (for braking).

(1) Unwinding side: Torque control, winding side: Torque control

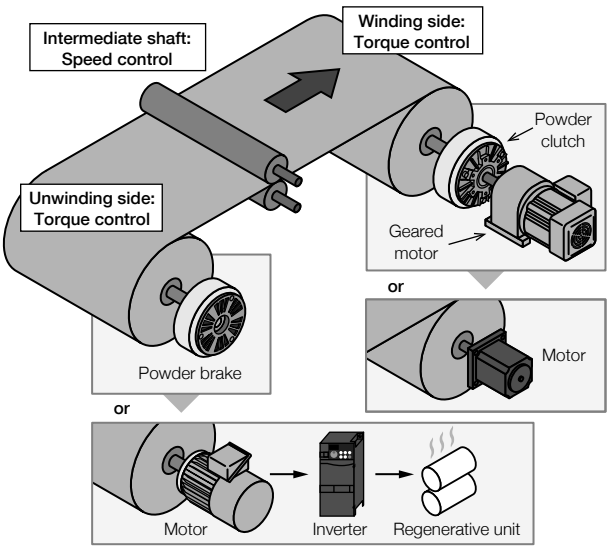

(2) Unwinding side: Torque control, winding side: Speed control

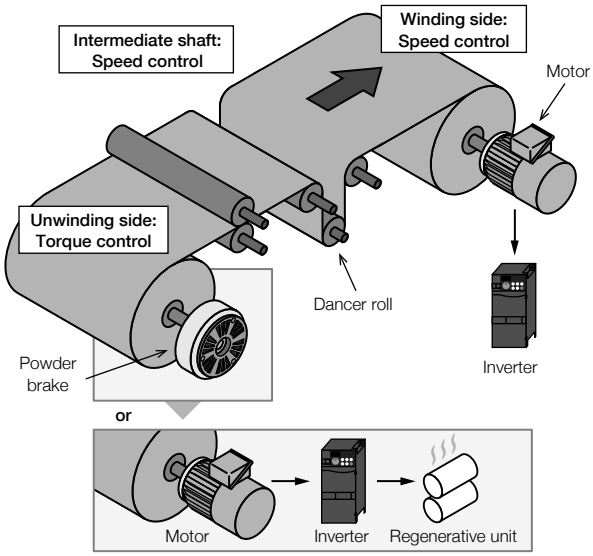

(3) Unwinding side: Speed control, winding side: Torque control

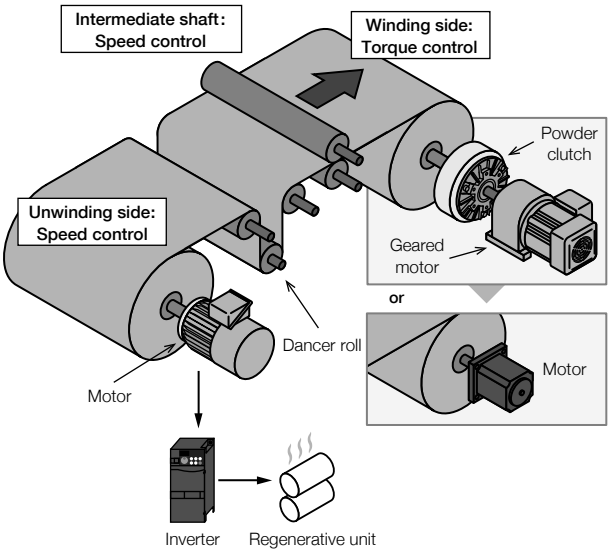

(4) Unwinding side: Speed control, winding side: Speed control

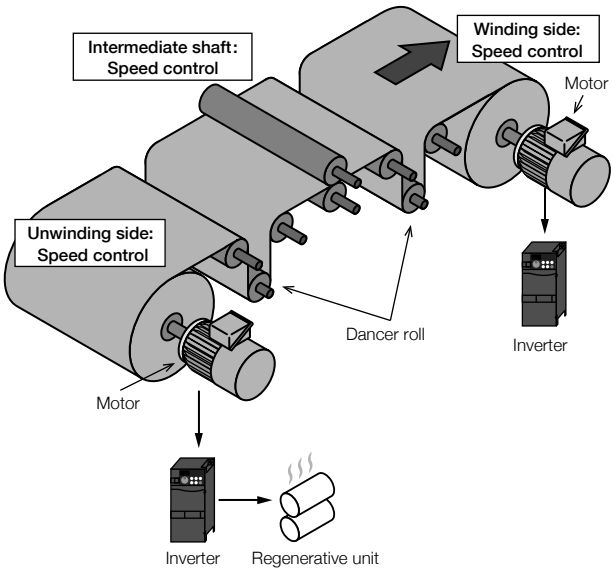

■ Advantages and disadvantages of the intermediate shaft

Intermediate shaft	Unwinding	Winding	Advantage	Disadvantage
Not installed	Torque control	Speed control	- The configuration is simple because the main shaft works also as the winding reel shaft. (The separate main shaft does not exist.) - The material surface is not damaged because the material is not nipped.	- The tension for winding and tension for unwinding cannot be set separately. - The speed fluctuates considerably compared with the system in which the main shaft is set separately. - The regenerative converter is required when the motor is installed on the unwinding side.
	Speed control	Torque control		
Installed	Torque control	Torque control	- The line speed is stable. - Because the material is nipped by the intermediate shaft, the tension for winding and tension for unwinding can be set separately. - The system can cope with low tension because the motor can positively feed out the material when the dancer roll is used. The dancer roll mitigates fluctuations of the tension even if the machine accelerates or decelerates.	- An actuator is required for each of the winding reel shaft, unwinding reel shaft and main shaft. - The material surface may be damaged because the material is nipped.
	Speed control	Torque control		
	Torque control	Speed control		
	Speed control	Speed control		

Powder clutches/brakes are suitable for torque control at low line speed, and motors are suitable for torque control at high line speed.

Actuators for torque control: Powder clutches/brakes, servo motors (in the torque control mode), inverters/motors (equipped with encoder), etc.
Actuators for speed control: Servo motors (in the speed control mode), inverters/motors (not equipped with encoder), etc.

7-2 Configuration of the tension control system

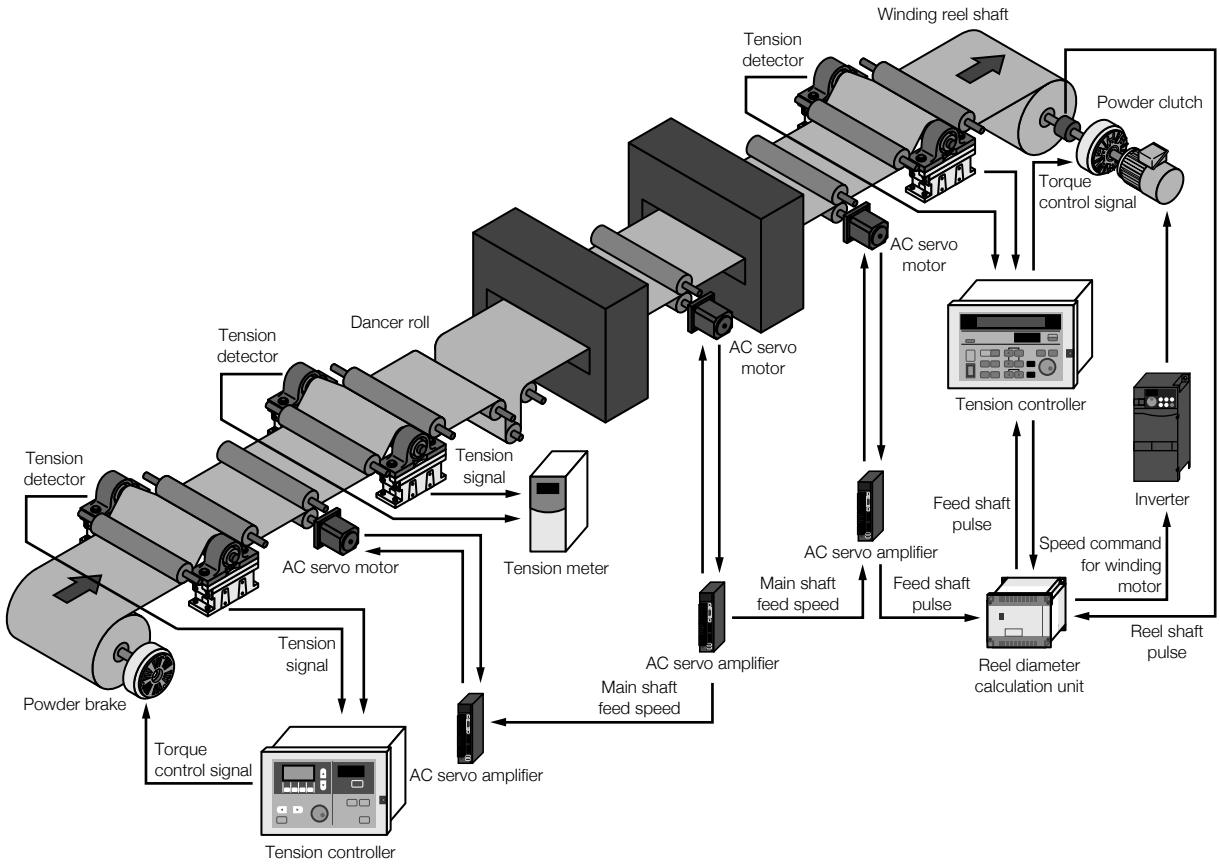

■ 7-2-1 Nip roll

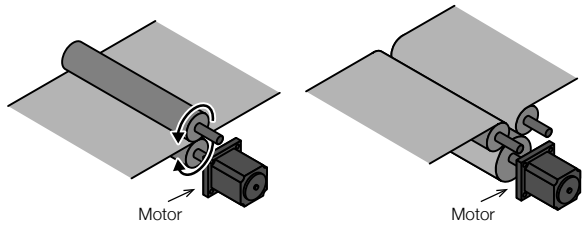

Nip roll mechanism

Nip roll alternative mechanism

The tension of the material fed in the machine is changed in each process. In addition, the role for tension control is different in each section of the machine. Accordingly, it is necessary to change over the control in each section of the machine even for the material fed continuously. To achieve the control changeover, driving rolls are installed in the middle of the machine for dividing each control section.
Nip rolls which nip the material from above and from below are generally used as the mechanism for driving the material in the middle. Nip rolls usually nip the material with a constant pressure given by the air cylinder.
If the material cannot be nipped due to the nature of processes, the material may be wound around rubber rolls so that the surface friction of the driving rolls becomes as large as possible.

■ 7-2-2 Setting the main shaft

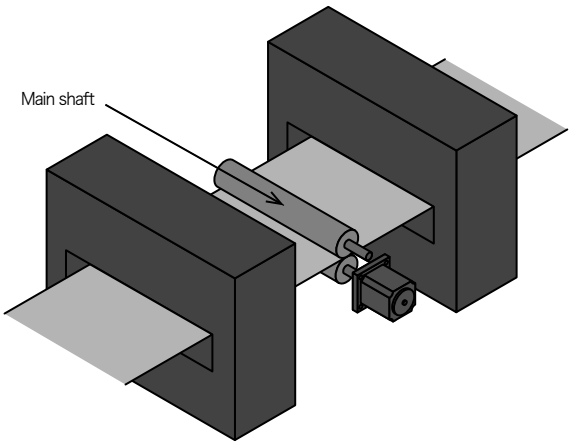

It is essential that the machine has only one main shaft and its speed is controlled. The main shaft determines the processing speed of the entire machine, and other driving shafts should follow the main shaft to feed the web stably. The main shaft works as the leader of the entire machine. In the way that the leader should have the leadership to control, conduct and lead a group, the main shaft should have the force to lead the entire machine properly. The term "force" here refers to sufficiently stable speed control and torque. The material is affected by three types of forces (torques), "force of the tension", "force caused by the inertia" and "force caused by mechanical friction". The main shaft should rotate stably even if these forces change successively. Especially when the machine accelerates or decelerates, the torque caused by the inertia of all rotating parts of the machine is applied on the main shaft. This fact should be considered in determining the actuator for the main shaft.

■ 7-2-3 Tension control method

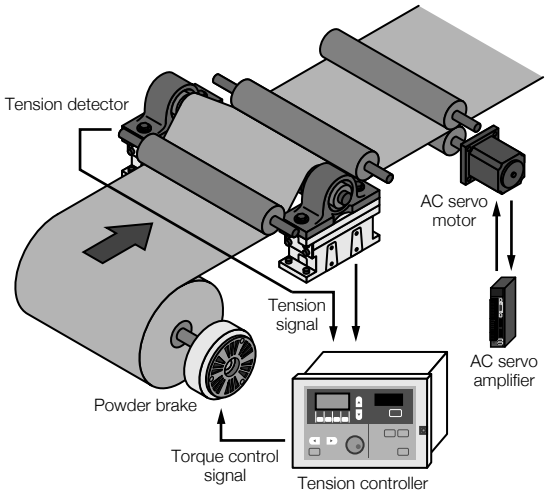

[Unwinding control]

Unwinding control is performed in the area from the reel from which the material is unwound to the first driving roll. Unwinding control is required to unwind the material whose diameter changes at a constant tension. In unwinding control, the driving roll should work as the pulling side and the unwinding reel shaft should work as the pulled side. In some machines including the resin film forming machine, the unwinding section does not exist because resin is fed out continuously in a film shape.

● Unwinding mechanism

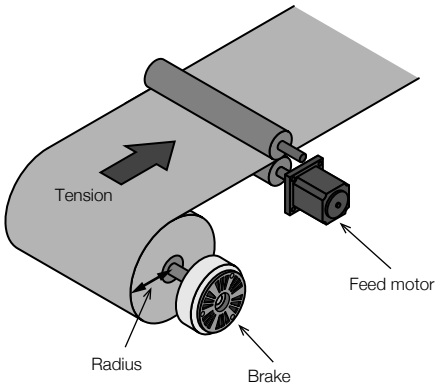

[1-shaft unwinding mechanism]

The brake is installed in the reel shaft. Because of the relationship "Unwinding tension = Braking torque/Unwinding radius", a constant tension can be achieved when the braking torque is decreased in accordance with the decrease of the reel diameter.
A speed increaser and speed reducer such as gear and pulley are installed as necessary between the reel shaft and the brake.

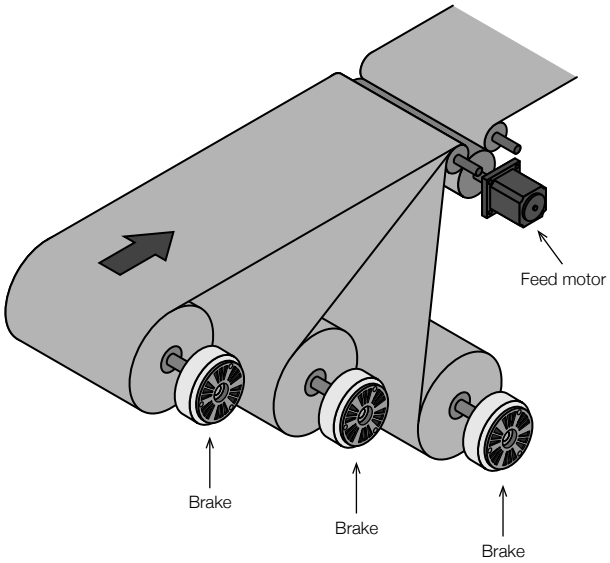

[Simultaneous multi-shaft unwinding mechanism]

In the single cutter (overlapped paper cutting machine), yarn sizing machine and film laminator, long materials wound around multiple reels are unwound at the same time. When the overall tension control is performed, the torque of each brake should be even. The intended tension (tension set value) is changed in accordance with the thickness, width, strength, etc. of the material. In addition, because the reel diameter is always changing, each brake should have the performance to adjust the torque in a wide range.

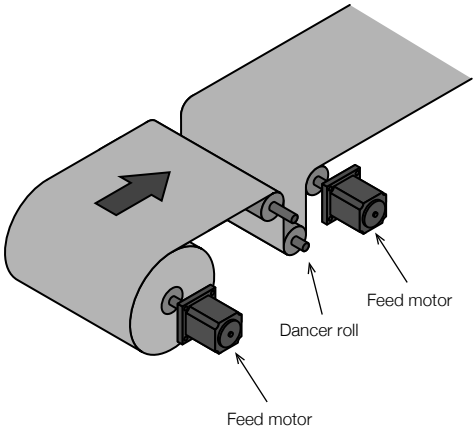

[Unwinding mechanism with motor]

■Positive unwinding mechanism

In the following cases, the reel shaft may be driven by the motor to achieve positive unwinding:

- When the reel is heavy, and manual operations such as initial paper passing should be made easy
- When the peripheral speed of the preparatory reel should be controlled so that it becomes equivalent to the unwinding speed of the currently used reel in the automatic paper splicing device (auto paster)
- When the tension caused by mechanical loss of the unwinding shaft is high compared with the intended unwinding tension
- When the tension during acceleration caused by the reel inertia is high at startup (Positive unwinding and compensation of the mechanical loss or inertia are required.)

In the above cases, tension control by the speed using the dancer roll mechanism is generally required.

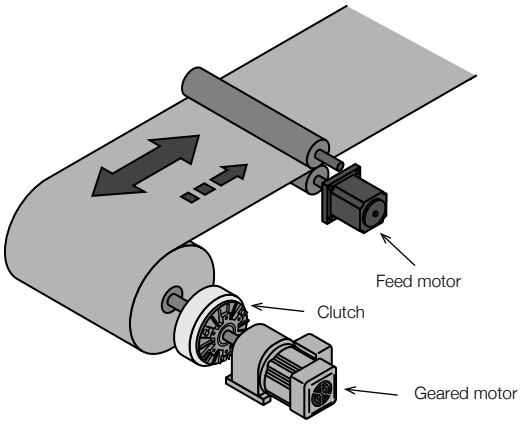

■Unwinding mechanism driven by reverse rotation

In the follwing cases, the motor and clutch are used instead of the brake to drive the reel by reverse rotation:

- When the material is wound and unwound between a pair of reels in the rewinding machine
- When the rotation speed of the brake is 5 r/min (15 r/min in the ZA type) or less on the unwinding side

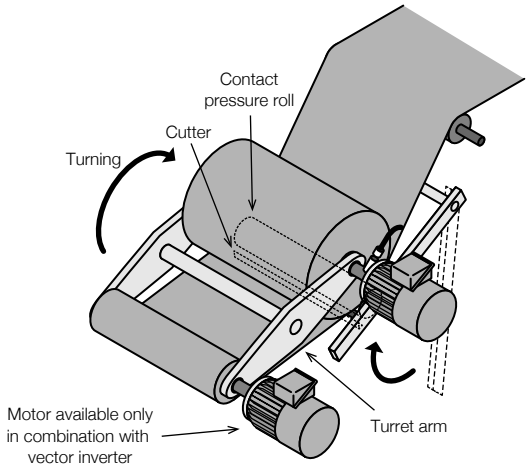

[Automatic paper splicing mechanism]

This mechanism is designed to splice the material (paper) without stopping the machine using two or three unwinding reels installed in the turning arm (turret arm) using the following procedure:

(1) Double-sided adhesive tape is put on the outer periphery of the new shaft in advance.
(2) The arm turns to move the new shaft near the upper surface of the unwound material.
(3) The new shaft is driven preliminarily, and the peripheral speed of the new shaft is made equivalent to the machine speed.
(4) The traveling material is pressed onto the new shaft using the contact pressure roll, and the material in the new shaft is connected to the travelling material.
(5) The cutter is actuated, and cuts the material in the original shaft.

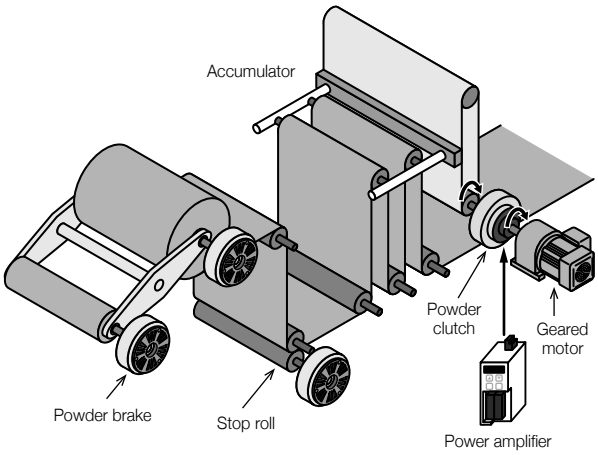

Two or three reel shafts are installed in the turning arm (turret arm), and paper is spliced using the following procedure:

(1) The arm turns to move the preparatory reel to the lower surface of the unwound material.
(2) The brake is applied on the stop roll of the accumulator to stop unwinding.
(3) The elevator roll of the accumulator moves down, and continues to feed paper. The tension is kept constant by control of the torque of the clutch for moving up the elevator roll.
(4) The material in the new reel and original reel (stopped) is pressurized, and original paper is cut.
(5) The brake of the stop roll is released, and the elevator roll moves up.
(6) The torque of the unwinding brake is controlled to keep the prescribed tension.

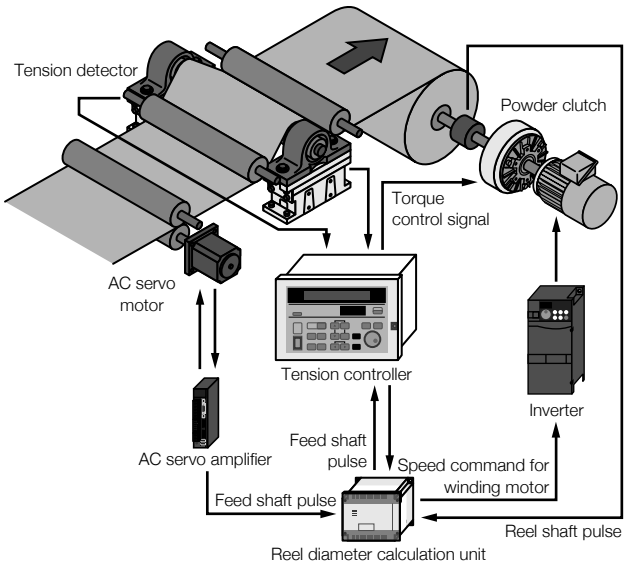

[Winding control]

Winding control is performed in the reel which winds the material from the final driving roll.
In the machine adopting winding control, the material should be wound into a neat shape because the material will be used in the next machine. To achieve a neat shape, the tension is not kept constant, but is decreased gradually as the reel diameter increases (taper tension) in some cases. Or the mechanism to prevent involvement of the air during winding may be installed.
In winding control also, the driving roll should work as the pulling side and the winding shaft should work as the pulled side. In some machines in which the cut status is the final product such as the newspaper printing machine and cutter, winding control is not performed.

● Winding mechanism

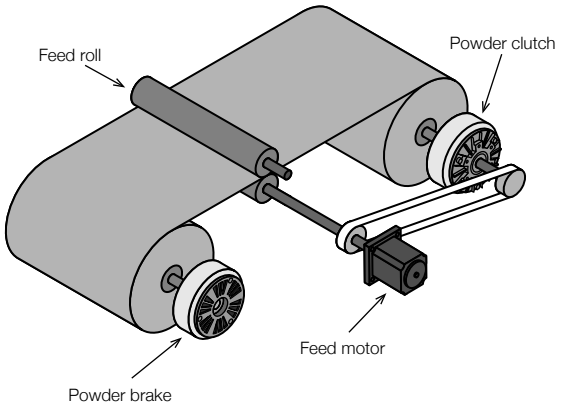

[Small-capacity winding mechanism]

The material winding speed is kept constant by the rotation speed of the feed roll. The torque of the clutch is increased as the winding reel diameter increases to keep the tension constant.
Though the input rotation speed of the clutch is constant, the rotation speed on the output side decreases and the slip rotation speed (difference between the input rotation speed and the output rotation speed) increases as the reel diameter increases.
The speed reduction mechanism such as gear and pulley is installed as necessary in the input shaft and output shaft of the clutch.
Heat generation in the clutch and brake is in proportion to the product of the slip rotation speed and transmitted torque. In the unwinding brake, the heat generation quantity is always constant because the slip rotation speed is low when the torque is high (that is, the reel diameter is large) and the torque is small when the slip rotation speed is high (that is, the reel diameter is small).
In the case of clutch, the slip rotation speed is high when the torque is high, and thermally unfavorable phenomenon may occur. A large sized-motor is required for winding in the same way. The unwinding power (W) can be calculated approximately by the expression "0.0167 × Line speed (m/min) × Tension (N)".

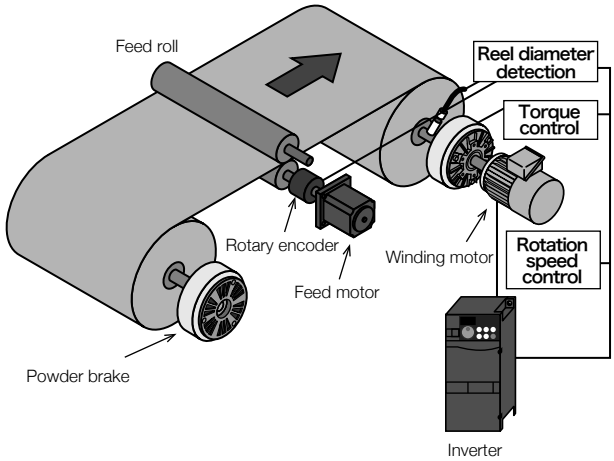

[Constant-slip control mechanism for winding]

By using the tension controller having the slip rotation speed control function, it is possible to control the rotation speed of the winding motor so that the slip rotation speed of the winding clutch becomes constant without regard to the reel diameter. This can decrease the heat generation quantity per unit time caused by slip of the clutch.

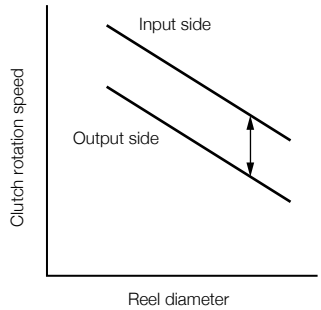

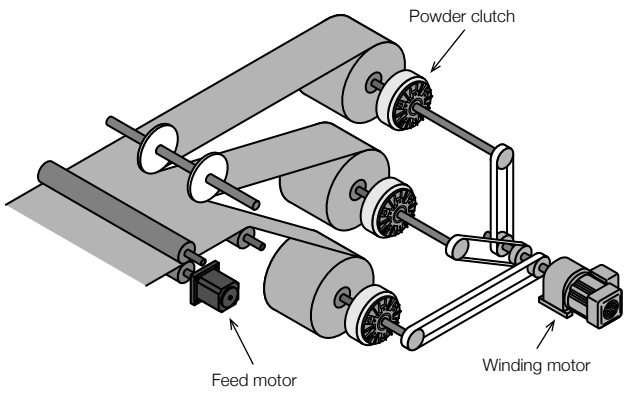

[Multi-shaft winding mechanism]

In the slitter (which cuts a wide sheet into tape) and separator (which separates a laminated sheet and winds it), the clutches may be installed in multiple reel shafts and controlled by one winding motor as shown in the left figure.

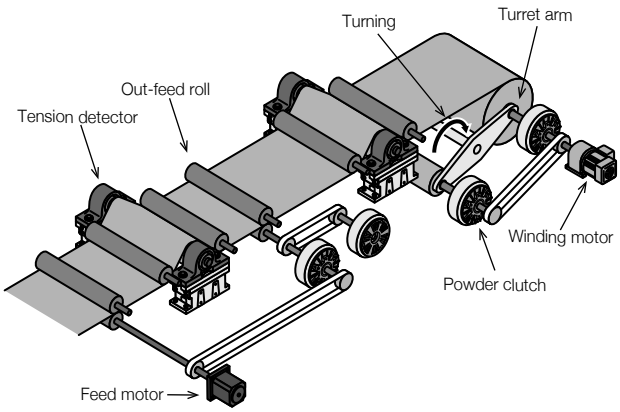

[Continuous winding mechanism]

When both automatic paper splicing & unwinding and automatic paper splicing & winding are performed at the same time, the accumulator is installed (for paper splicing while winding is stopped) in some cases and is not installed (for paper splicing while winding is performed) in other cases.
When the accumulator is not installed, pre-drive control is required to match the peripheral speed. The left figure shows the 2-shaft winding mechanism in which out-feed control is adopted in the continuous winding method (without the accumulator).
In the winding mechanism, the clutch and motor are installed in the turret arm in some cases, and installed on the stationary side in other cases.

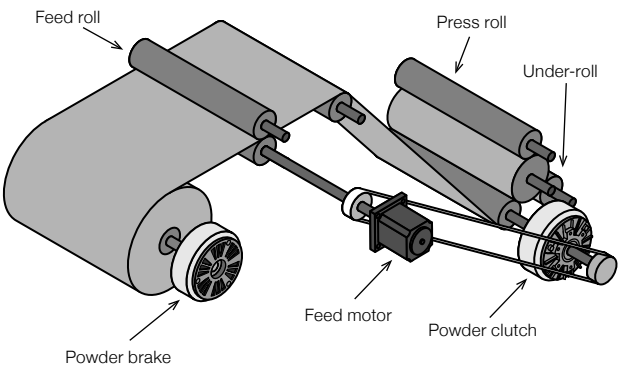

[Surface winding]

The area around the reel shaft is in contact with the under-roll by the pressure from the press roll.
The clutch controls the under-roll driving torque to achieve a constant tension.

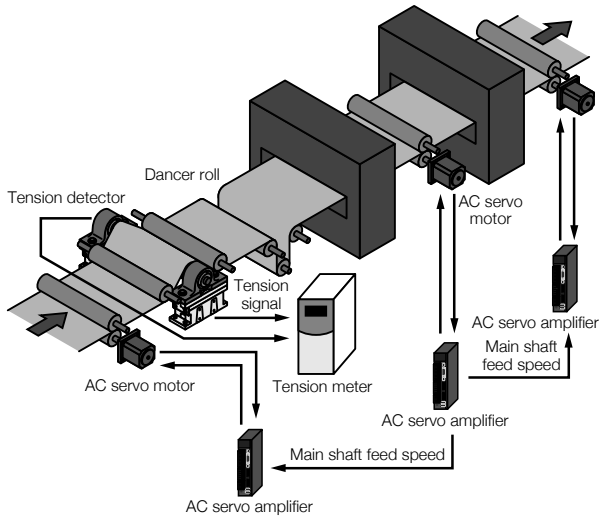

[Intermediate shaft control]

Intermediate shaft control is performed in the area from the first driving roll to the last driving roll in the machine.
The unwinding side from the main shaft (area between the unwinding reel and the feed roll) is called in-feed, and the winding side from the main shaft (area between the winding reel and the feed roll) is called out-feed.
The in-feed area is designed to assure stable tension of the material unwound by unwinding control before processing and prevent shocks generated by changeover of the unwound material from being transmitted to the processing section.
The out-feed area is designed to prevent fluctuations in the winding tension from being transmitted to the processing section. Because the tension changes by taper tension control in winding control, the out-feed area cuts the tension so that tension changes do not give effect to the processing section. The out-feed area also prevents shocks generated by changeover of the wound material from being transmitted to the processing section.

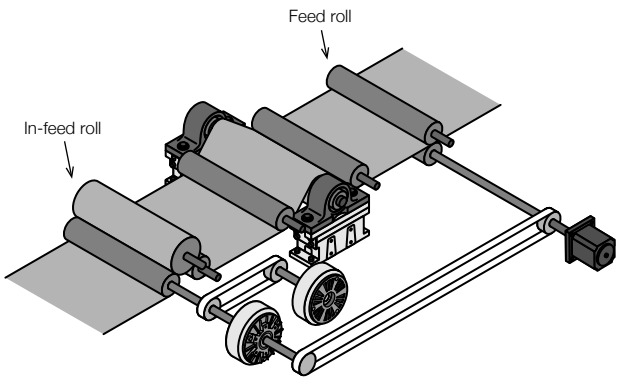

[In-feed mechanism]

The clutch and brake are installed in the in-feed roll shaft to enable reversible torque control. By this mechanism, the tension in the unwinding section and the tension in the paper feed section can be set independently. For example, the unwinding tension becomes smaller than the paper feed tension when the brake is applied, and the unwinding tension becomes higher than the paper feed tension when the clutch is driven. In addition, the in-feed mechanism can correct tension fluctuations of long cycle in the unwinding section.
When the in-feed roll and feed roll are driven by the separate motors, servo motors may be available instead of the clutch-brake mechanism.

7-3 Taper tension control

● Taper tension control

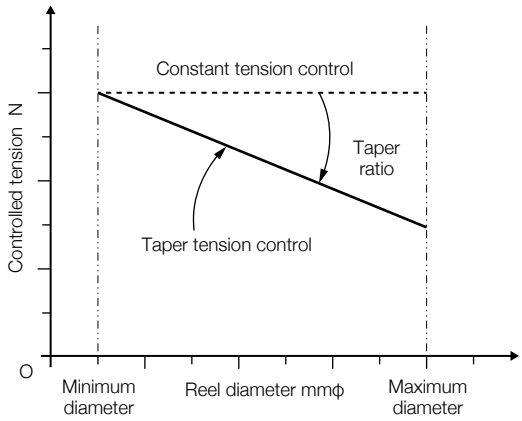

Taper tension control (taper control) refers to the control which changes the tension in accordance with changes in the reel diameter.
Taper control is mainly used for winding control. The tension is decreased as the reel diameter increases so that the material is not wound too tightly or not displaced during winding.
The taper ratio refers to the inclination of tension decrease against constant tension control as shown in the left figure.

● Broken line taper tension control

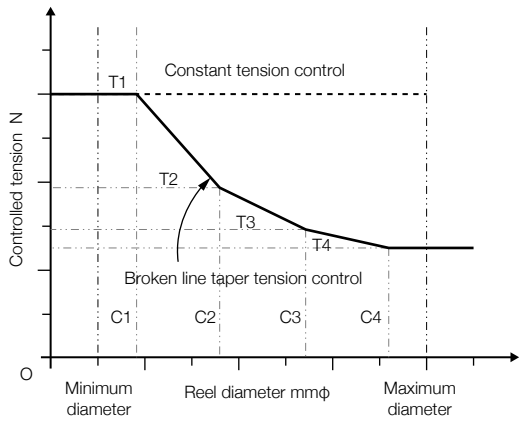

Broken line taper tension control refers to the taper tension control which changes the taper ratio in the intermediate reel diameter without using a same taper ratio from the initial diameter to the final diameter.

Important point!

Construction of the tension control system

- Determining the main shaft in the machine used as the reference of the speed
- Dividing control sections, and installing nip rolls
- Determining the control type (speed control or torque control) to be adopted in each control section
- Determining the control method (dancer roll or tension detector)

Chapter.8

Application Examples

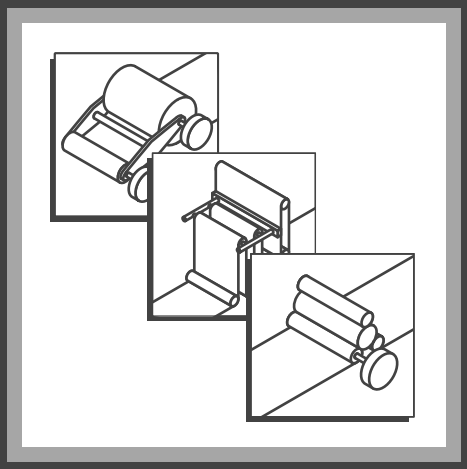

8-1 Business form printing machine

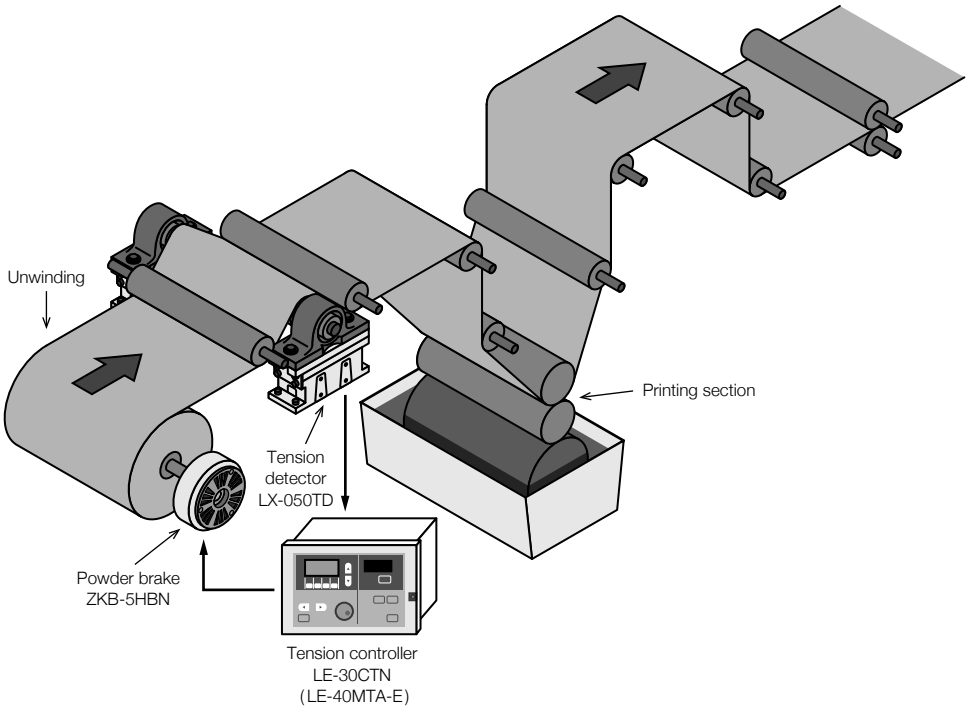

Features

- The feedback type tension controller is used to prevent color shift in printing and improve the pitch accuracy of punched holes used for feed to the printer.
- The stall memory function is effective in the inching operation for color matching during printing to reduce color shift and pitch deviation at restart.
- When the machine decelerates immediately before the base paper runs short, the deceleration gain is utilized to reduce color shift and pitch deviation caused by slack.
- The powder brake is the thermo block cooling type which does not require the water piping.

Use conditions

		Unwinding
Tension	N	100 to 200
Line speed	m/min	250 or less
Reel diameter	ϕ	95 to 800

Workpiece material	Printer paper

Applicable models

Powder brake	ZKB-5HBN
Tension controller	LE-30CTN (LE-40MTA-E)
Tension detector	LX-050TD

8-2 Offset printing machine

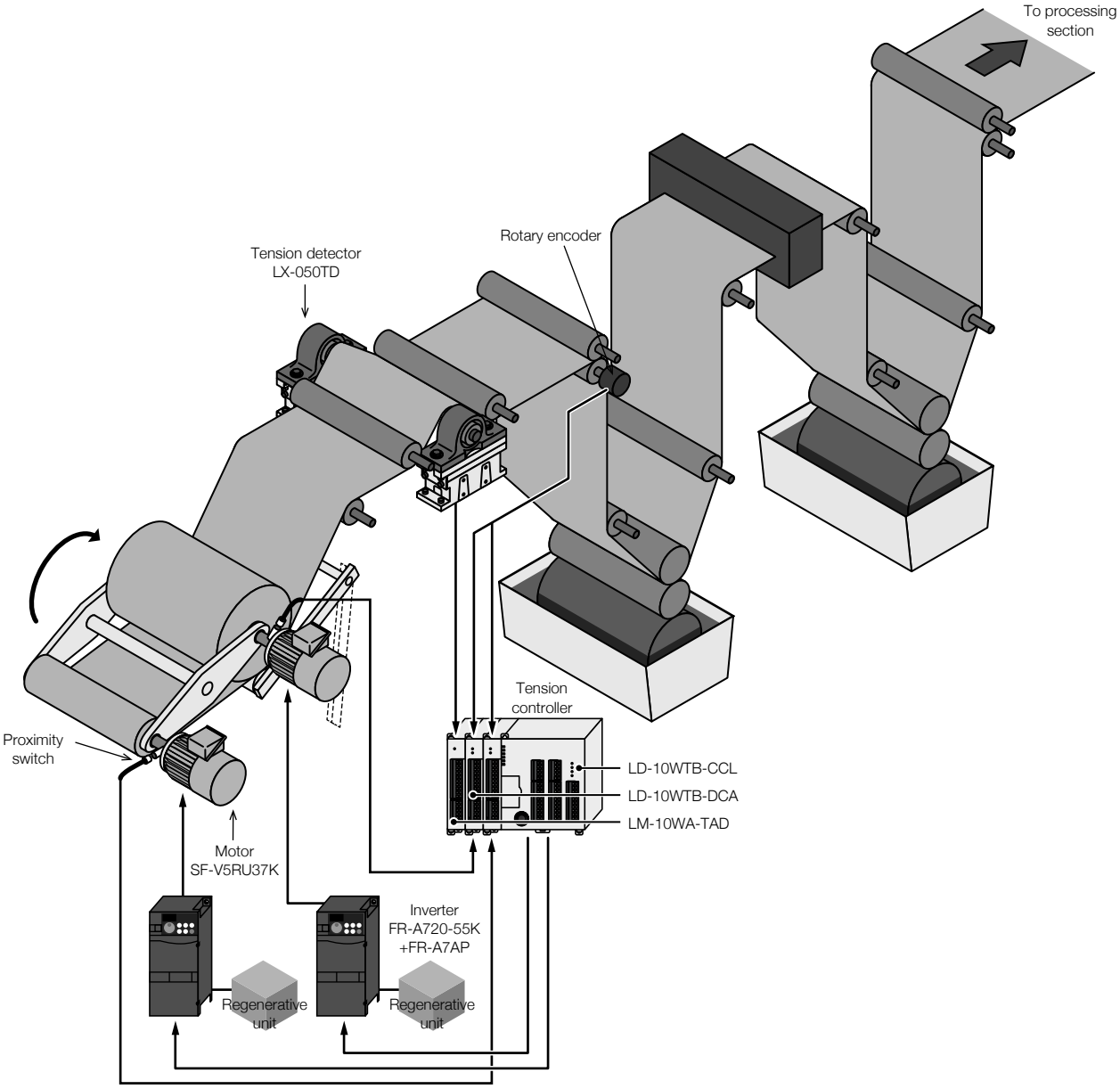

Features

- Full automatic paper splicing (auto pasting) may be performed in the paper feed section for labor saving.
- In tension control, the reel diameter is detected and fed back for automatic paper splicing.
- The stall memory function is effective in the inching operation for color matching during printing to reduce color shift and pitch deviation at restart.
- When the machine decelerates immediately before the base paper runs short, the deceleration gain is utilized to reduce color shift and pitch deviation caused by slack.

Use conditions

		Unwinding
Tension	N	200 to 300
Line speed	m/min	500 or less
Reel diameter	ϕ	100 to 1000

Applicable models

Vector inverter	FR-A720-55K + FR-A7AP (option)
Motor	SF-V5RU37K
Tension controler	LD-10WTB-CCL + LD-10WTB-DCA + LM-10WA-TAD or LE-10WTA-CCL + LD-10WTB-DCA x 2 units
Tension detector	LX-050TD

8-3 Gravure printing machine

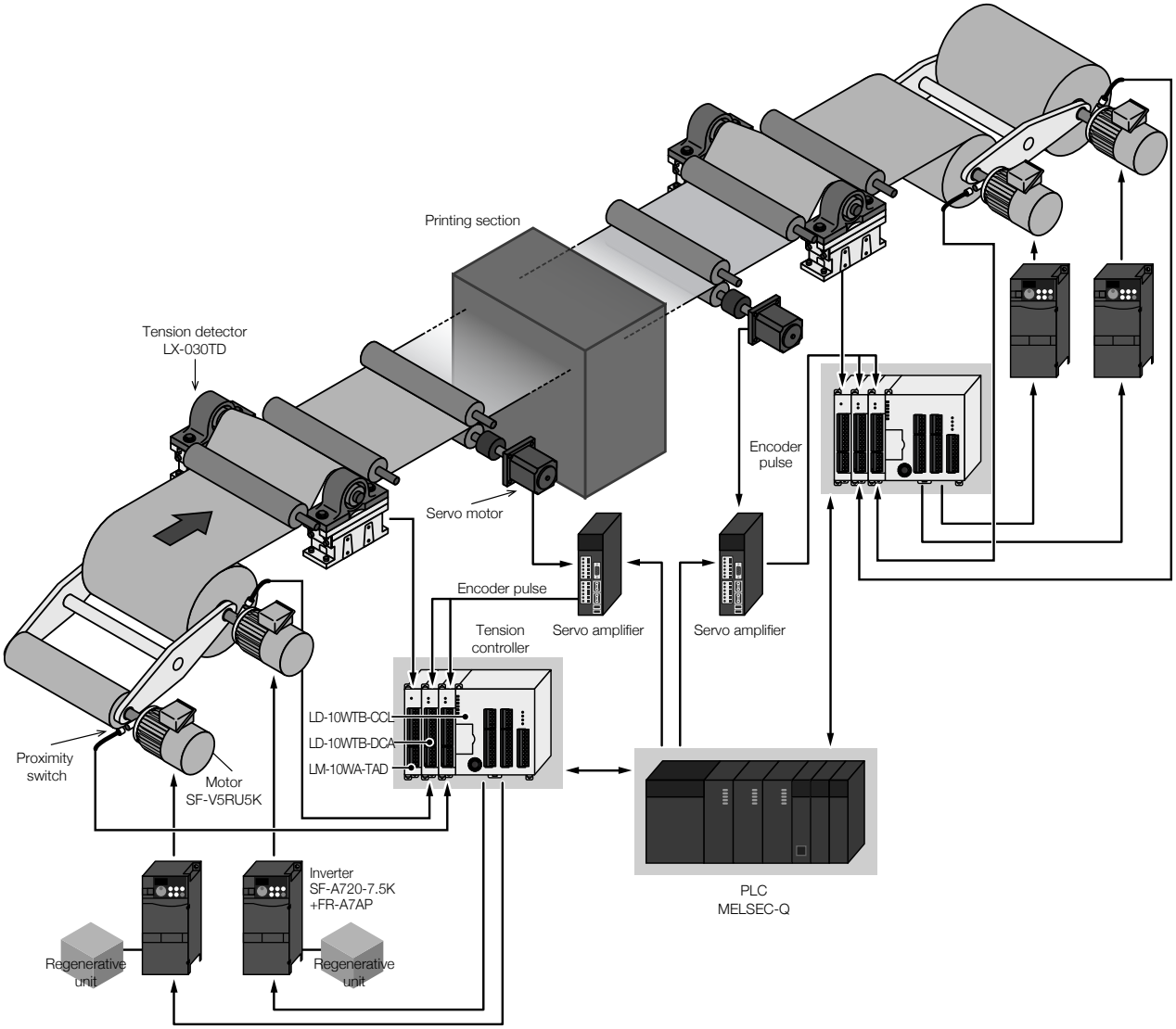

Features

- Two shafts in the unwinding section and two shafts in the winding section are driven by the vector inverters in the torque control mode.
- The system is connected to the CC-Link, and operated through the network.

Use conditions

		Unwinding	Winding
Tension	N	30 to 150	30 to 150
Line speed	m/min	200 or less	200 or less
Reel diameter	ϕ	100 to 700	100 to 700

Applicable models

Vector inverter	FR-A720-7.5K + FR-A7AP (option)
Motor	SF-V5RU5K
Tension controller	LD-10WTB-CCL + LD-10WTB-DCA + LM-10WA-TAD or LE-10WTA-CCL + LD-10WTB-DCA x 2 units
Tension detector	LX-030TD

8-4 Screen printing machine

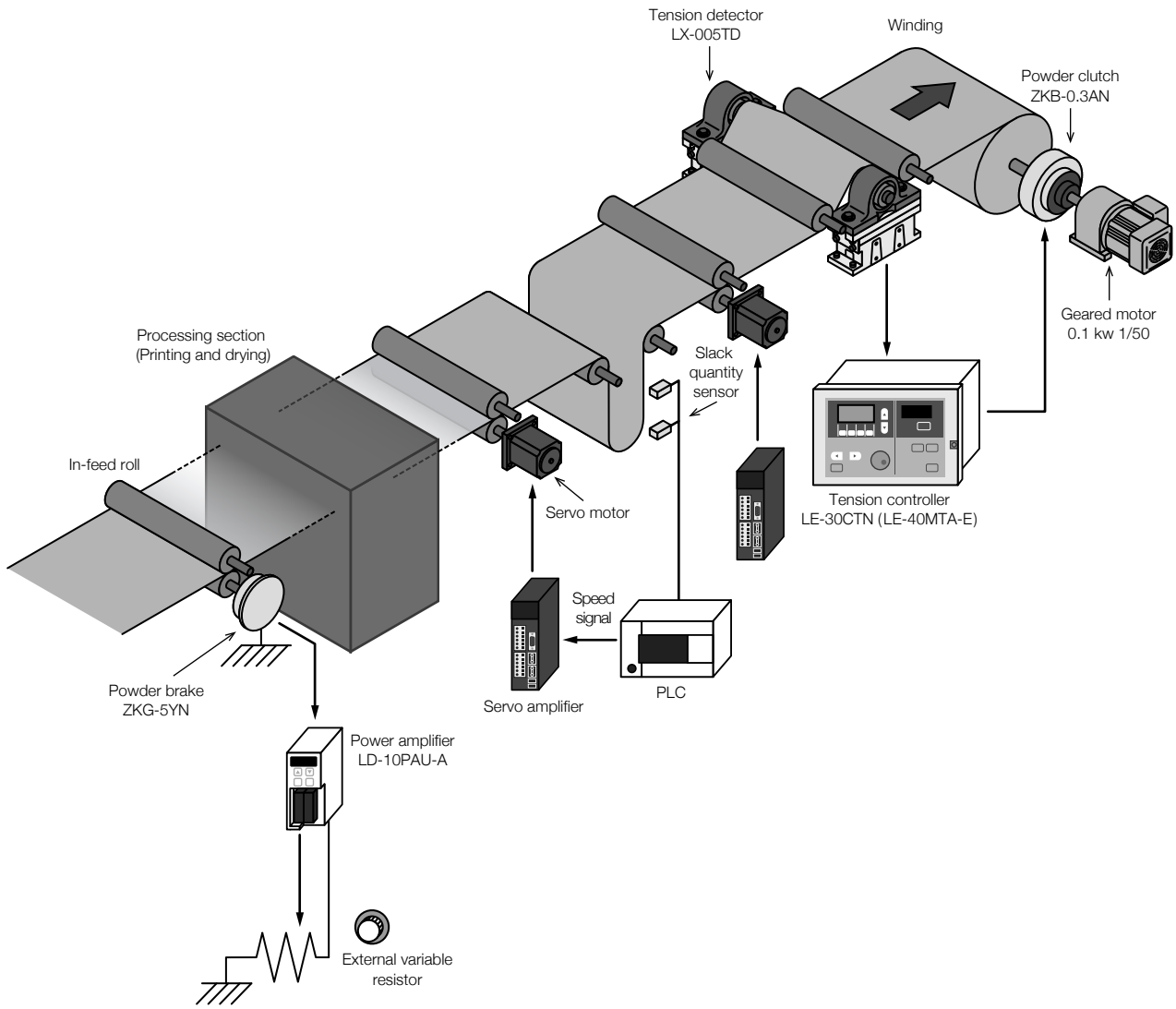

Features

- This system is applicable to the machine which requires intermittent feed in the processing section.
- The processing section performs intermittent operation. The material is made slack at the exit of the processing section to absorb the intermittent operation in the processing section, and the winding section performs continuous operation.
- The slack quantity at the exit of the processing section is detected by the sensor, and the intermittent roll speed is changed over so that the slack quantity is controlled to be within the prescribed range.

Use conditions

		In-feed area	Winding
Tension	N	1 to 1.5	5 to 10
Line speed	m/min	1	1
Reel diameter	ϕ	100	90 to 400

Line speed in the processing section

Applicable models

In-feed	
Power amplifier	LD-10PAU-A
Powder brake	ZKG-5YN

Winding	
Tension controller	LE-30CTN (LE-40MTA-E)
Geared motor	0.1 kW 1/50
Powder clutch	ZKB-0.3AN
Tension detector	LX-005TD

8-5 Unwinder

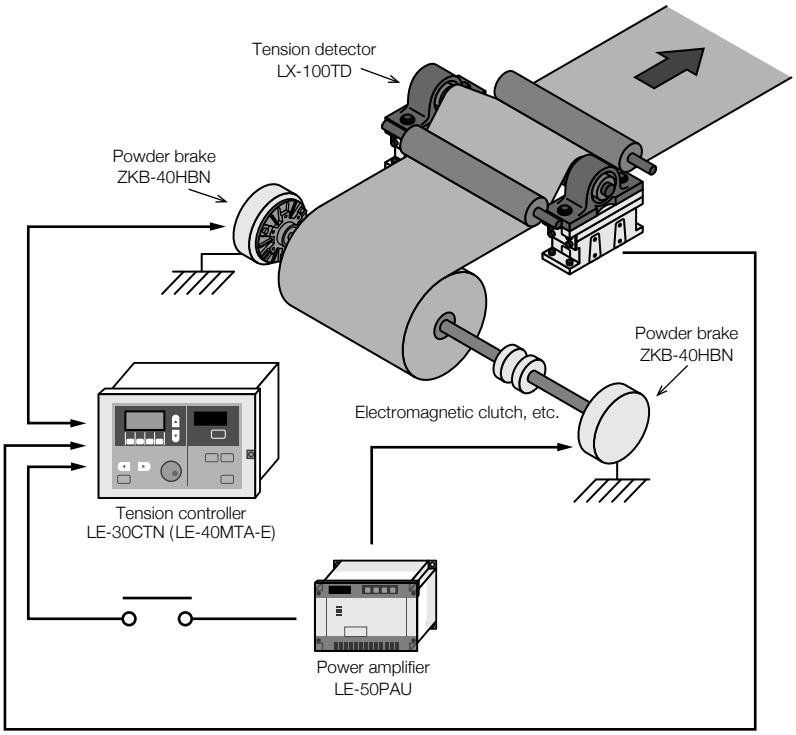

Features

- Because the torque control range is wide, two powder brakes are used together or only one power brake is used at a time in accordance with the tension size.
- When the tension F is 200 to 500 N, two powder brakes (ZKB-40HBN) are used.
  When the tension F is 50 to 270 N, only one powder brake (ZKB-40HBN) is used.
  (It is necessary to separate the unused powder brake (ZKB-40HBN) using another clutch mechanism so that the idling torque does not give effect while the tension is low.)
- This system is applicable to unwinding control of large capacity.
  Because the available range of the brake torque control ratio is wide by changing over the number of used brakes in accordance with the tension size, this system are suitable for applications in which the difference in the used tension is large and applications in which the reel diameter ratio is high.

Use conditions

		Unwinding
Tension	N	50 to 500
Line speed	m/min	50 to 700
Reel diameter	ϕ	96 to 1100

Applicable models

Winding	
Tension controller	LE-30CTN (LE-40MTA-E)
Power amplifier	LE-50PAU
Powder brake	ZKB-40HBN
Tension detector	LX-100TD

8-6 Wire unwinder

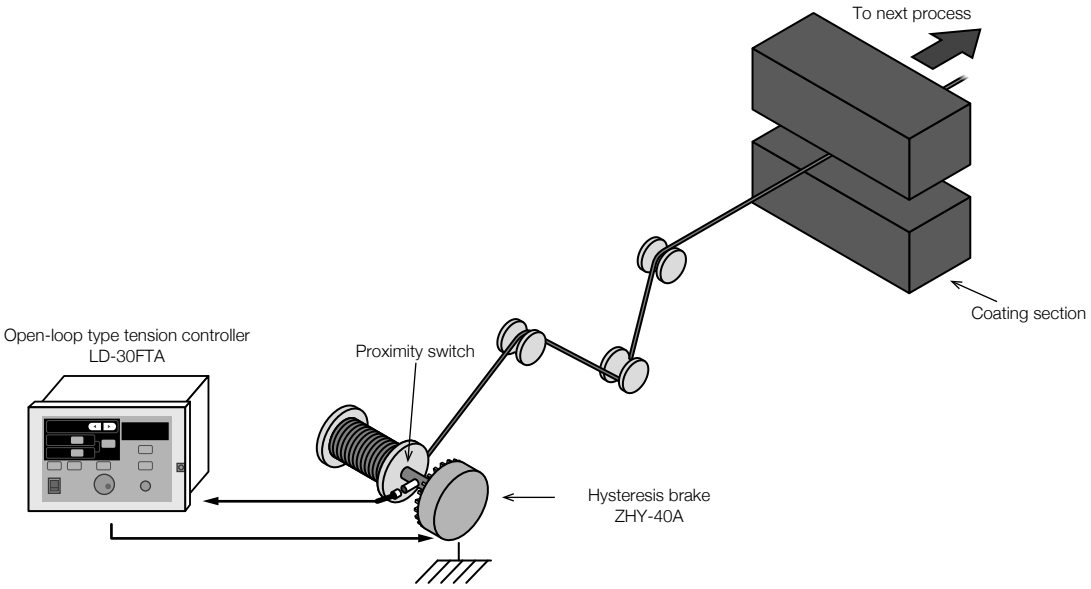

Features

- The wire bobbin is unwound before the coating process. The simple reel diameter detection type tension control is adopted to apply such a size of tension as not to cause slack in the wire.
- Fifty rows of material are wound on 1 layer, and the reel radius changes by 1.2 mm when the reel rotates by 50 turns. The material thickness is set to "24 μm" as shown in the following calculation:
  (Thickness per layer/Number of turns per layer) × (1/Pulse number generated per rotation)
  = (1.2 mm/50) × (1/1) = 0.024 mm = 24 μm
- The inertia is compensated in the stop status to prevent slack in the material. Because the LD-30FTA has the function to compensate the nonlinearity of clutches between the excitation current and the transmitted torque, it can improve the controllability even in the reel diameter detection type open-loop tension control.
- Because open-loop control is free from hunting, this system is applicable to sheet cutters and other machines which are started and stopped frequently.

Use conditions

		Unwinding
Tension	N	20 to 50
Line speed	m/min	30 to 50
Reel diameter	ϕ	80 to 300

Material	Wire ϕ1.2

Applicable models

Unwinding	
Tension controller	LD-30FTA
Hysteresis brake	ZHY-40A

8-7 Wire twisting machine

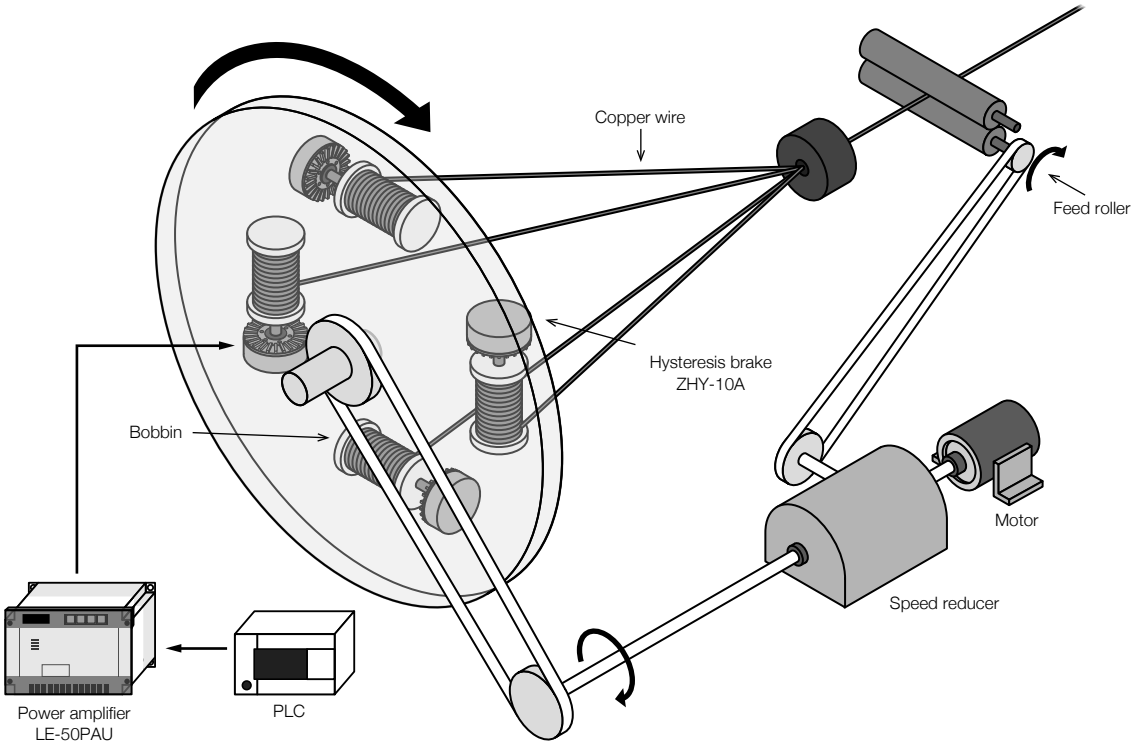

Features

- The power amplifier is used to unwind the copper wire in the wire twisting machine at a constant tension.
- The hysteresis brake is suitable for this type of machine because it does not have mechanical contact and is not affected by the torque characteristics caused by the centrifugal force generated by rotation.
- Because it is not easy to detect the copper wire reel diameter in this type of system, the tension is controlled by the reel diameter calculation based on the copper wire feed quantity performed by the PLC.
- One LE-50PAU unit controls four hysteresis brakes.

Use conditions

		Unwinding
Tension	N	20
Line speed	m/min	30 to 100
Reel diameter	ϕ	200 to 400

Material	Copper wire

Applicable models

Unwinding	
Power amplifier	LE-50PAU
Hysteresis brake	ZHY-10A × 4 units

8-8 Punching machine

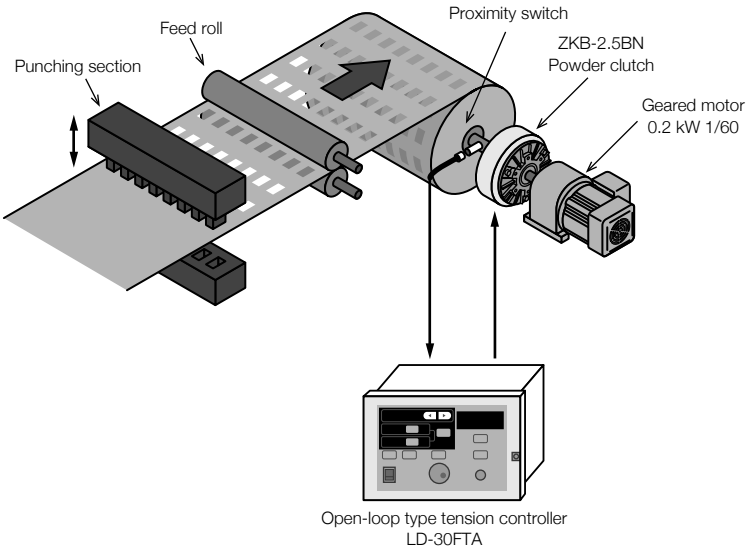

Features

- The material does not travel but is fed intermittently during punching. This system controls the tension in the winding section.
- Though the material is fed intermittently, the geared motor for winding is always rotating so that the material is stretched properly even in the stop status.
- Because intermittent operation is required, the reel diameter detection type tension controller which offers stable control is adopted.
- Because the material thickness is 200 μm, the reel shaft pulse number is set to "10 pulses/rotation" and the material thickness is set to "20 μm (= 200 × 1/10)".
- This system is applicable to machines requiring intermittent feed such as hot stamping machine and screen printing machine.

Use conditions

		Winding
Tension	N	50 to 100
Line speed	m/min	6 or less
Reel diameter	ϕ	92 to 500

Material	Paper (Thickness: 200 μm)
Number of times of intermittent feed	10 times/min

Applicable models

Winding	
Tension controller	LD-30FTA
Powder clutch	ZKB-2.5BN
Geared motor	0.2 kW 1/60

8-9 Traverse type wire winder

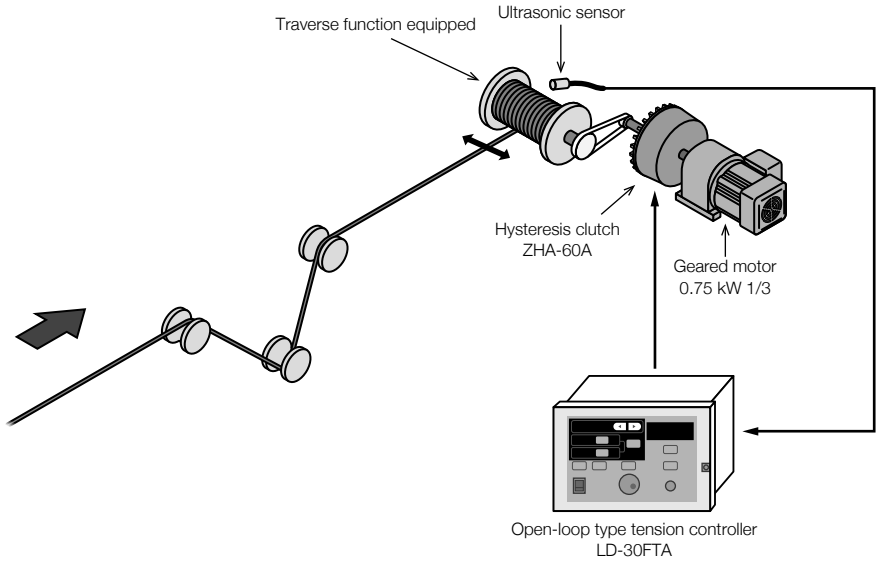

Features

- Wire, etc. is wound around the bobbin. Wire is wound while being traversed in the bobbin width direction several times.
- Open-loop type tension control is performed, and the ultrasonic sensor is used to detect the reel diameter.
- The setting is simple because the material thickness setting (which is required in the reel diameter calculation method) is not required.
- Because the LD-30FTA has the function to compensate the nonlinearity of clutches between the excitation current and the transmitted torque, it can improve the controllability even in the reel diameter detection type open-loop tension control.
- Because the LD-30FTA incorporates the taper tension control function, too tight winding can be prevented.

Use conditions

		Winding
Tension	N	20 to 50
Line speed	m/min	30 to 50
Reel diameter	ϕ	80 to 300

Material	Wire ϕ0.8

Applicable models

Winding	
Tension controller	LD-30FTA
Hysteresis clutch	ZHA-60A
Geared motor	0.75 kW 1/3

8-10 Inflatable extruder + 2-shaft film winder

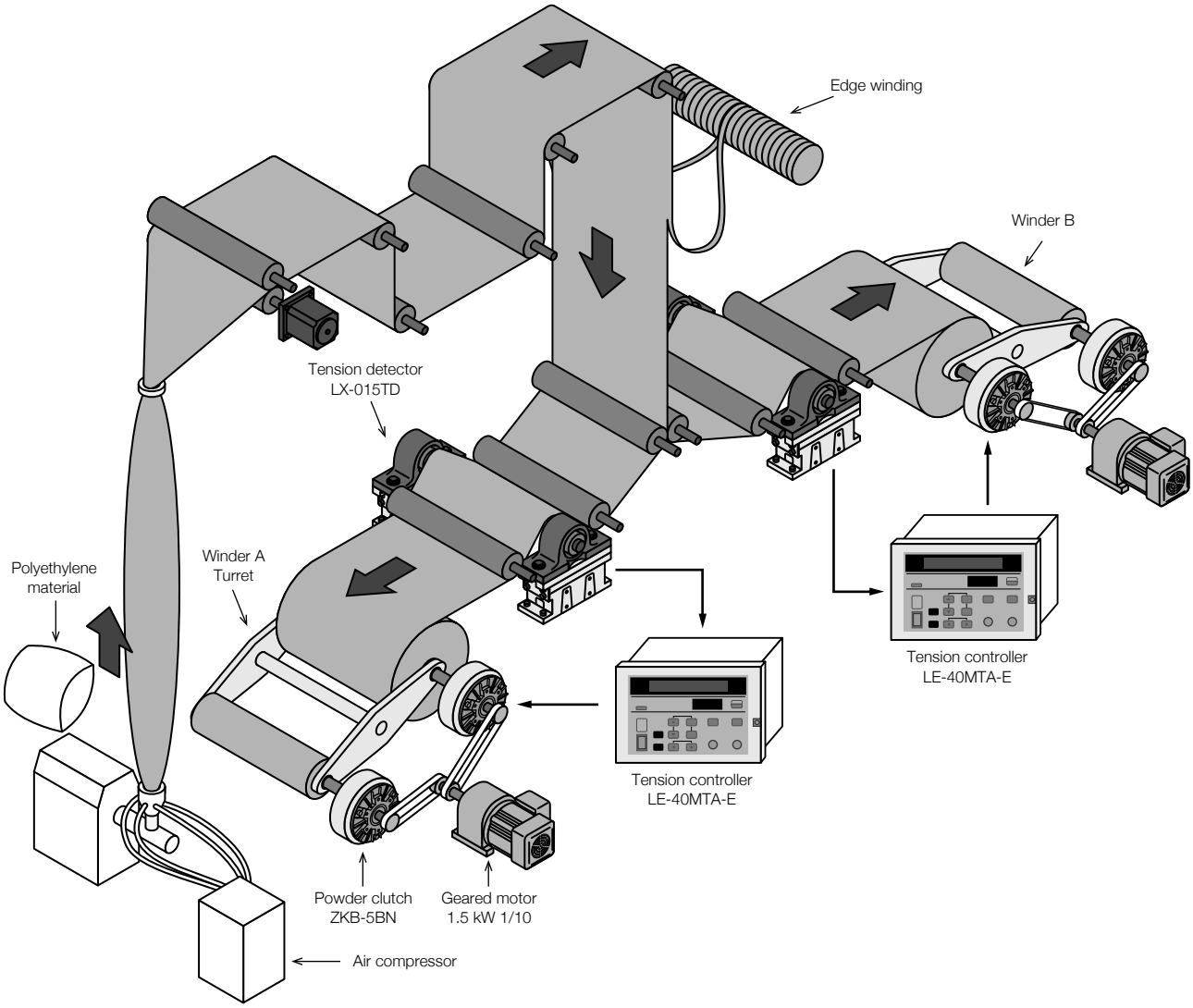

Features

- The inflatable extruder extrudes polyethylene film into a cylindrical shape. The cylindrical film is folded in half, cut at both edges, and shaped into two sheets.
- The material film is cooled in this period, and each of the two sheets is wound by the 2-shaft turret type automatic winder respectively. Tension control equipment are used also in this type of application.
- Because the LE-40MTA-E incorporates the new shaft preset (new shaft pre-drive output) function, simple external sequence enables automatic paper splicing using the 2-shaft turret machine.
- Because the LE-40MTA-E incorporates the cut gain (cut torque) function, film can be cut easily.
- This system is applicable to shaft changeover machines using the powder clutch.

Use conditions

		Winding
Tension	N	15 to 25
Line speed	m/min	50 to 150
Reel diameter	ϕ	100 to 900

Applicable models

Winding	
Tension controller	LE-40MTA-E × 2 units
Tension detector	LX-015TD
Powder clutch	ZKB-5BN (Forced air-cooling)
Geared motor	1.5 kW 1/10

Protective element	
Commutation diode	200 VA 5 A
Protective resistor	10 W 47 Ω

When the reel is changed over between two shafts, the powder clutch is changed over by the external contact. Make sure to install the protective diode and resistor in parallel to two powder clutches.

8-11 Multiple cutter

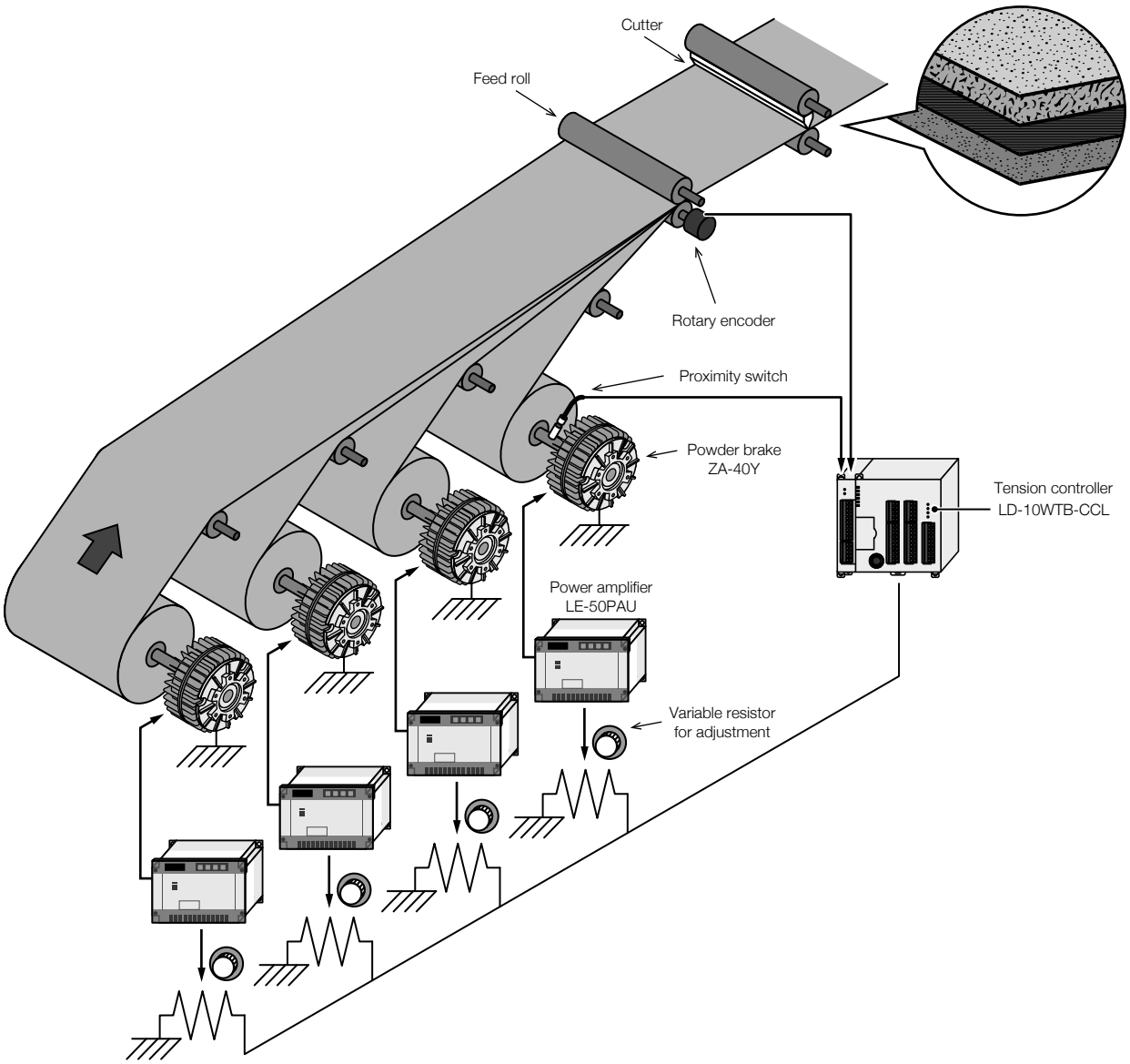

Features

- Because several sheets of paper are cut all at once, the tension of every sheet is kept constant to reduce the dimensional misalignment.
- The reel diameter is detected in the representative reel, and four powder brakes are controlled.
- The diameter must be equivalent among four reels in the unwinding section.
- Variable resistors for adjustment are used to fine-adjust the tension of each shaft.
- This system is applicable to multi-shaft unwinding in the sizing machine, etc.

Use conditions

		Winding
Tension	N	300 to 500
Line speed	m/min	60 to 100
Reel diameter	ϕ	100 to 1200

Material	Paper

Applicable models

Winding	
Tension controller	LD-10WTB-CCL
Power amplifier	LE-50PAU × 4 units
Powder brake	ZA-40Y × 4 units

8-12 Slitter

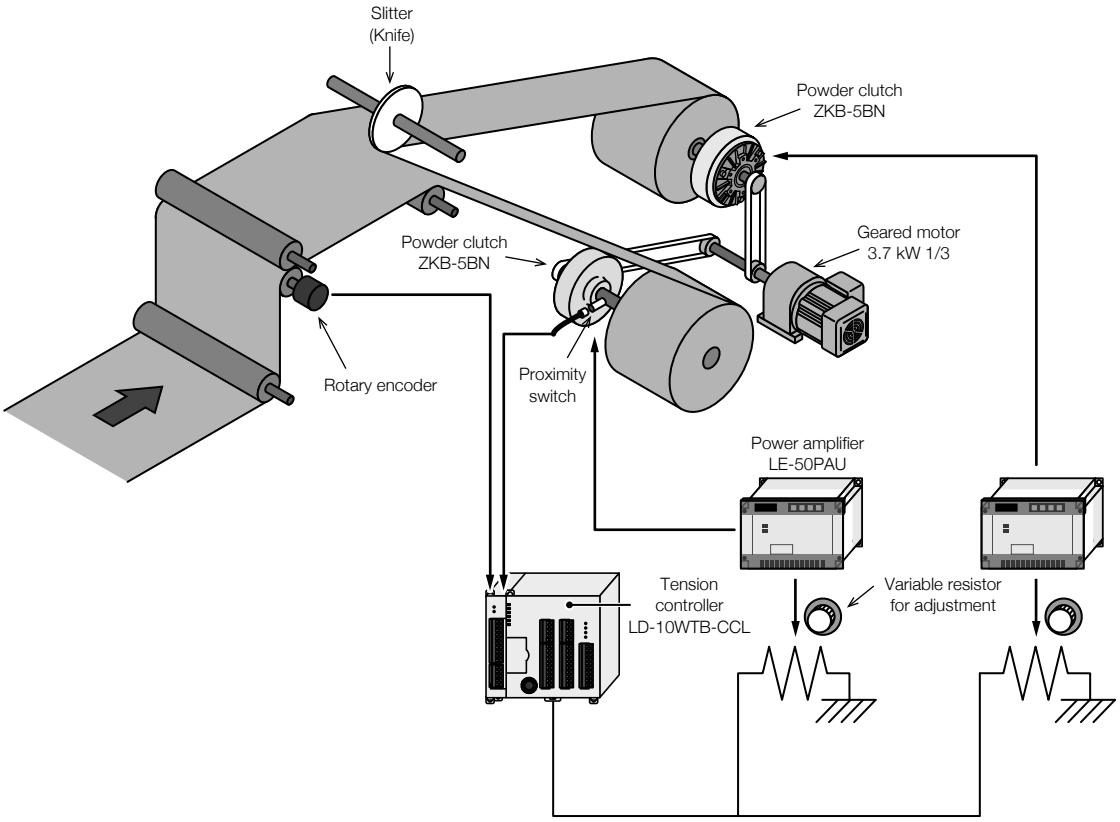

Features

- This system is used when the material is slit by the slitter (knife) and wound by multiple shafts, and the tension of each shaft is controlled at the same time.
- The proximity switch and pulse generator are connected directly to the representative reel shaft and roll shaft, the pulse from these shafts are input to the tension controller, and then the reel diameter is calculated in the calculation circuit built in the tension controller. This system adopts open-loop control, and hunting does not occur.
- Variable registers for adjustment are used together to eliminate the difference in the tension caused by the dispersion in the material width among the shafts and by the dispersion in the clutch torque.
- This system is applicable to any type of simultaneous multi-shaft winding.

Use conditions

		Winding
Tension	N	100 or less
Line speed	m/min	100 or less
Reel diameter	ϕ	110 to 400

Material	Film

Applicable models

	Winding
Tension controller	LD-10WTB-CCL
Power amplifier	LE-50PAU × 2 units
Powder clutch	ZKB-5BN (Forced air-cooling)
Geared motor	3.7 kW 1/3

8-13 Laminator

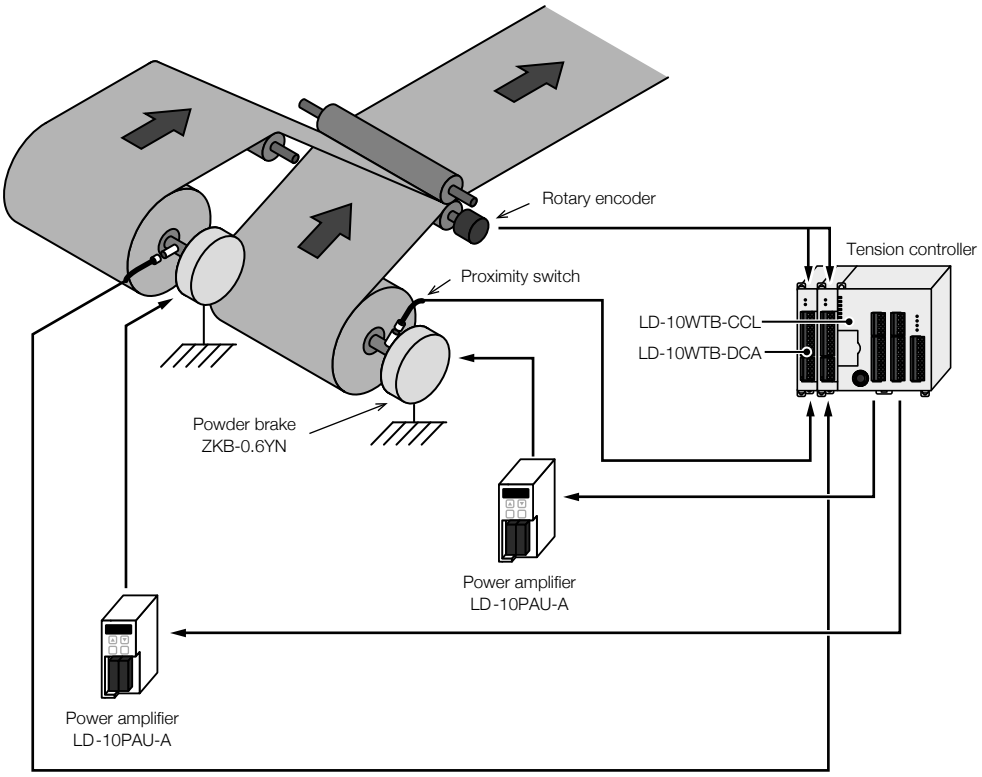

Features

- The reel diameter is detected in one representative shaft, and unwinding is controlled simultaneously in multiple shafts.
- This system is designed for general 2-shaft unwinding control in such a configuration that the reel diameter calculation adapter LD-10WTB-DCA is connected to the tension controller LD-10WTB-CCL.
- This system is applicable to any type of simultaneous multi-shaft unwinding.

Use conditions

		Unwinding
Tension	N	20 to 200
Line speed	m/min	2 to 20
Reel diameter	ϕ	110 to 400

Material	Film

Applicable models

Unwinding	
Tension controller	LD-10WTB-CCL + LD-10WTB-DCA
Power amplifier	LD-10PAU-A × 2 units
Powder brake	ZKB-0.6YN

8-14 Rolling machine

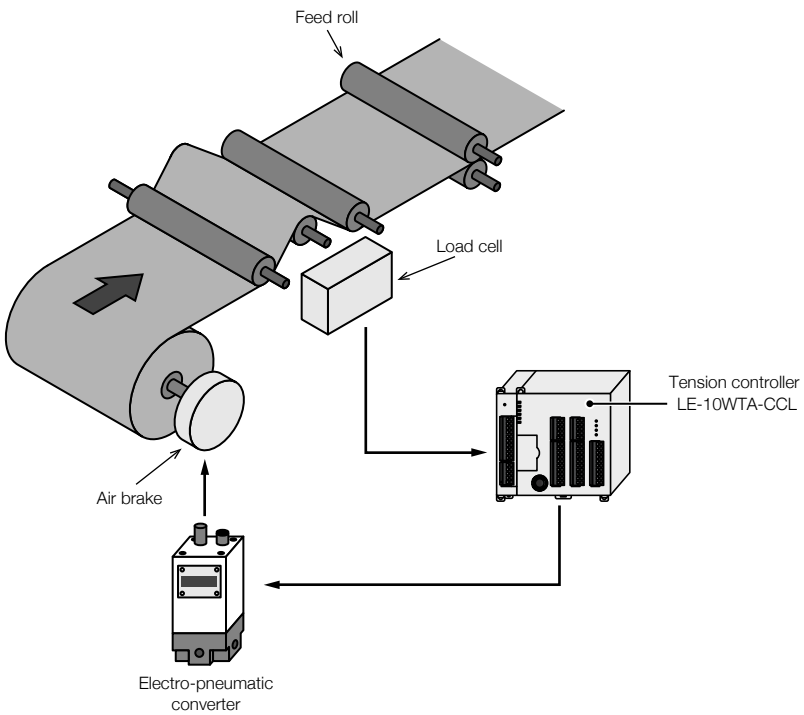

Features

- The air brake and load call control the tension for unwinding at high tension of metallic materials such as thin steel plate and aluminum plate.
- Because the tension is high, a commercial load cell is used as the detector, and the detected load is input to the tension controller.
- This system is applicable also to winders requiring high tension.

Use conditions

		Unwinding
Tension	N	10000 or less
Line speed	m/min	70 or less
Reel diameter	ϕ	250 to 1200

Material	Thin steel plate

Applicable models

Unwinding	
Tension controller	LE-10WTA-CCL
Air brake	Product manufactured by another company
Electro-pneumatic converter	Product manufactured by another company

8-15 Film cleaning machine

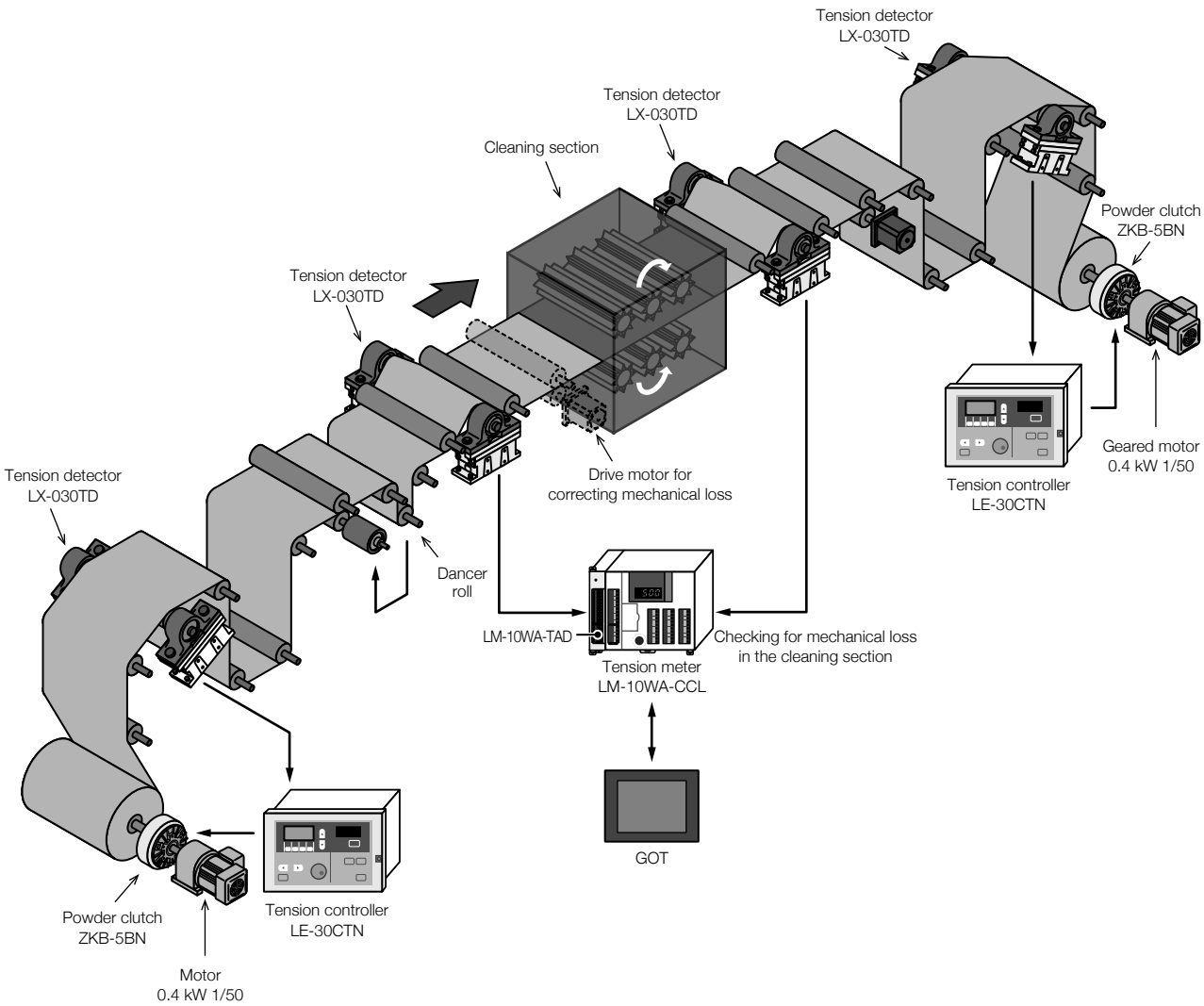

Features

- Because the speed is low, reverse rotation input of the powder clutch is used for unwinding to stabilize the tension.
- The tension is monitored before and after the cleaning section to check for mechanical loss.
  (When there is considerable mechanical loss, the drive motor for correcting the mechanical loss is installed.)
- Because the tension is low, the dancer roll is used to apply the tension.

Use conditions

		Unwinding	Winding
Tension	N	20 to 200	20 to 200
Line speed	m/min	0.1 to 6	0.1 to 6
Reel diameter	ϕ	Max 400	Max 400

Thickness	100 to 200 μm
Width	Max 700 mm
Mass	250 kg

Applicable models

Unwinding	
Tension controller	LE-30CTN
Tension detector	LX-030TD
Powder clutch	ZKB-5BN
Geared motor	0.4 kW 1/50

Winding	
Tension controller	LE-30CTN
Tension detector	LX-030TD
Powder clutch	ZKB-5BN
Geared motor	0.4 kW 1/50

In-feed area	
Tension meter	LM-10WA-CCL
Tension detector	LX-030TD

8-16 Plating machine

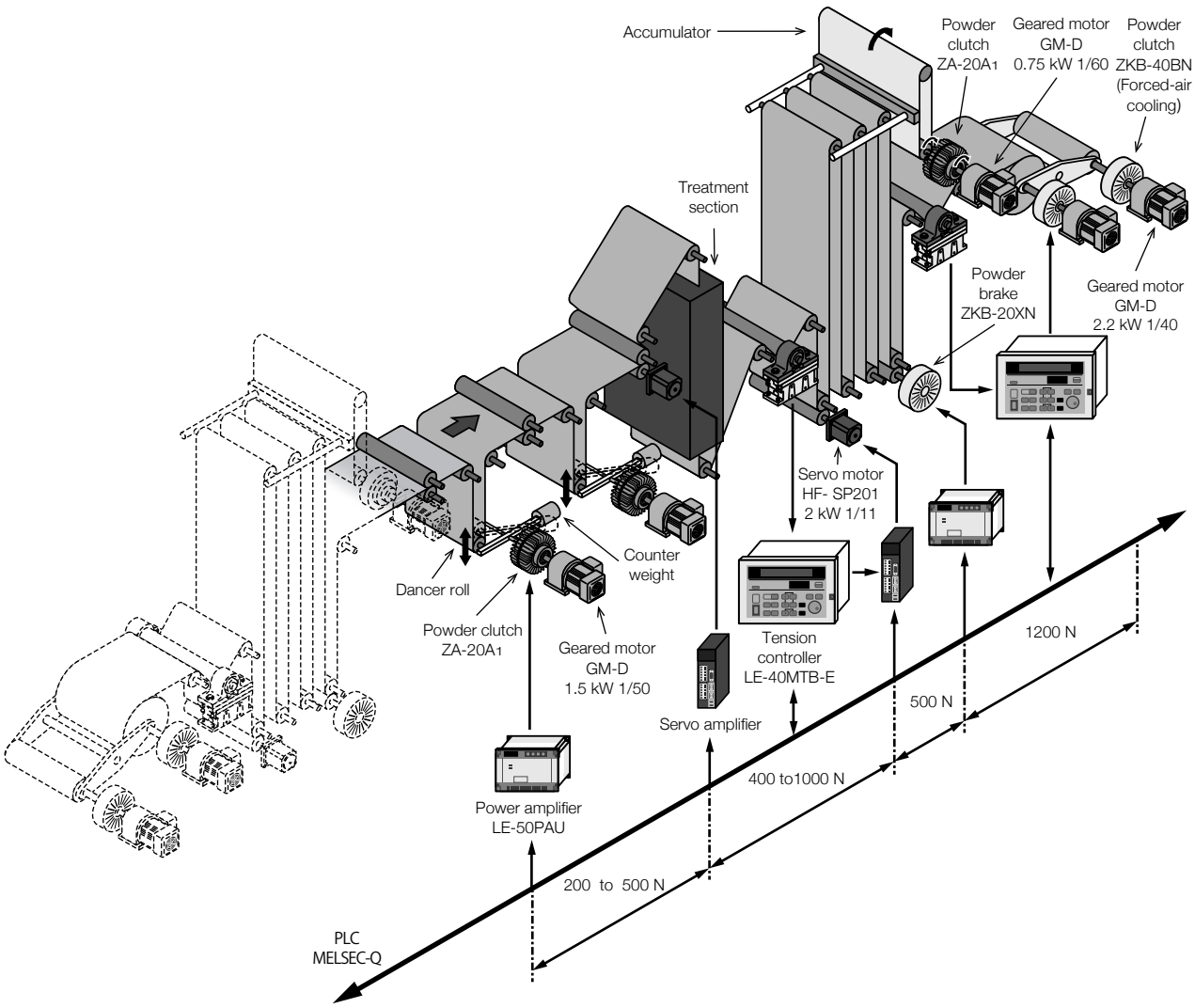

Features

- The powder clutch is used for the accumulator and dancer roll. The tension can be changed by setting the power amplifier.
- Two shafts are switched over using the stop roll in winding, and plating can be continued even when the shaft is switched over.

Use conditions

		Dancer roll area	Out-feed area	Accumulator area	Winding section
Tension	N	200 to 500	400 to 1000	500	1200 or less
Line speed	m/min	5 to 20	5 to 20	5 to 20	5 to 20
Reel diameter	ϕ	100	100	100	75 to 300

Workpiece material	Metallic foil
Thickness	10 μm (Initial value) 410 μm after treatment
Width	Max 700 mm

Applicable models

Dancer roll area	
Power amplifier	LE-50PAU
Powder clutch	ZA-20A1
Geared motor	1.5 kW 1/50

Accumulator area	
Power amplifier	LE-50PAU
Powder clutch	ZA-20A1
Geared motor	1.5 kW 1/50

Out-feed area	
Tension controller	LE-40MTB-E
Tension detector	LX-050TD
Servo motor	HF-SP201
Servo amplifier	MR-J3-200BN

Winding	
Tension controller	LE-40MTB-E
Tension detector	LX-050TD
Powder clutch	ZKB-40BN
Geared motor	2.2 kW 1/40

8-17 Vapor deposition machine

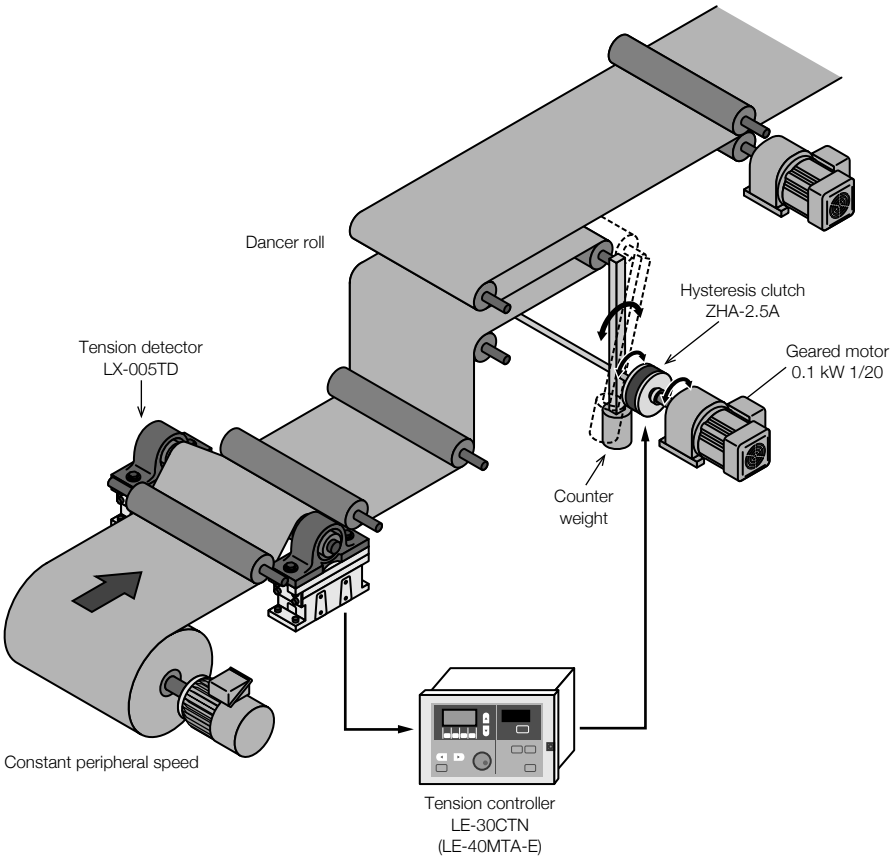

Features

- Because the tension is low, the unwinding reel shaft is controlled by speed with positive feed.
- Because the tension is low and inching is required, the tension is controlled using the dancer roll. Feedback control is performed in the dancer roll area using the hysteresis clutch.

Use conditions

		Dancer roll area
Tension	N	3 to 5
Line speed	m/min	9 (Average)
Reel diameter	ϕ	100

Applicable models

Dancer roll area	
Tension controller	LE-30CTN (LE-40MTA-E)
Tension detector	LX-005TD
Hysteresis clutch	ZHA-2.5A
Geared motor	0.1 kW 1/20

8-18 Winder

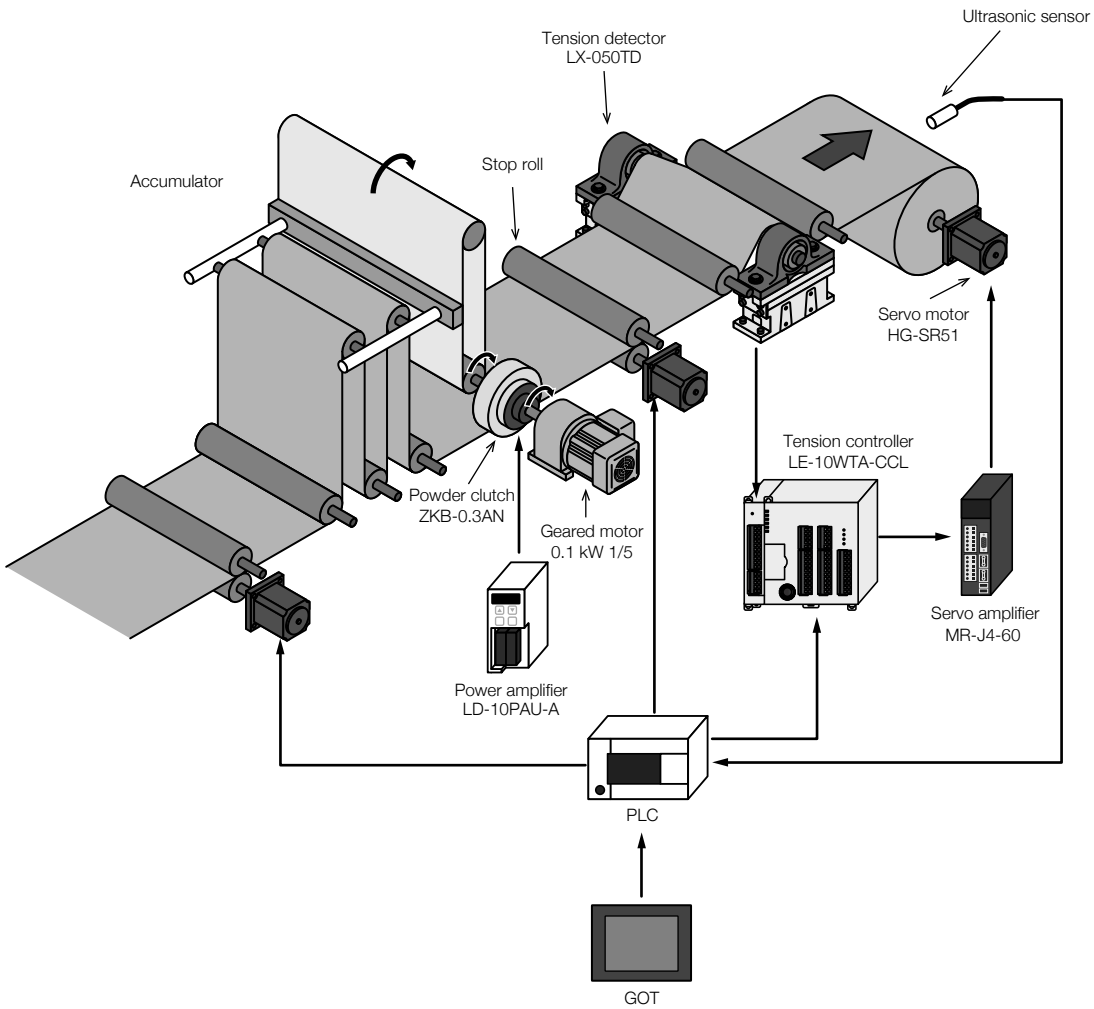

Features

- The PLC receives the reel diameter signal from the ultrasonic sensor, and performs external taper control.
- The shaft is changed over during winding using the stop roll.
- The accumulator controls the tension using the powder clutch.

Use conditions

		Accumulator	Winding
Tension	N	20 to 50	20 to 50
Line speed	m/min	Max 75	Max 75
Reel diameter	ϕ	100	96 to 400

Applicable models

Accumulator	
Power amplifier	LD-10PAU-A
Powder clutch	ZKB-0.3AN
Geared motor	0.1 kW 1/5

Winding	
Tension controller	LE-10WTA-CCL
Tension detector	LX-050TD
Servo motor	HG-SR51
Servo amplifier	MR-J4-60

8-19 Thickness measuring instrument

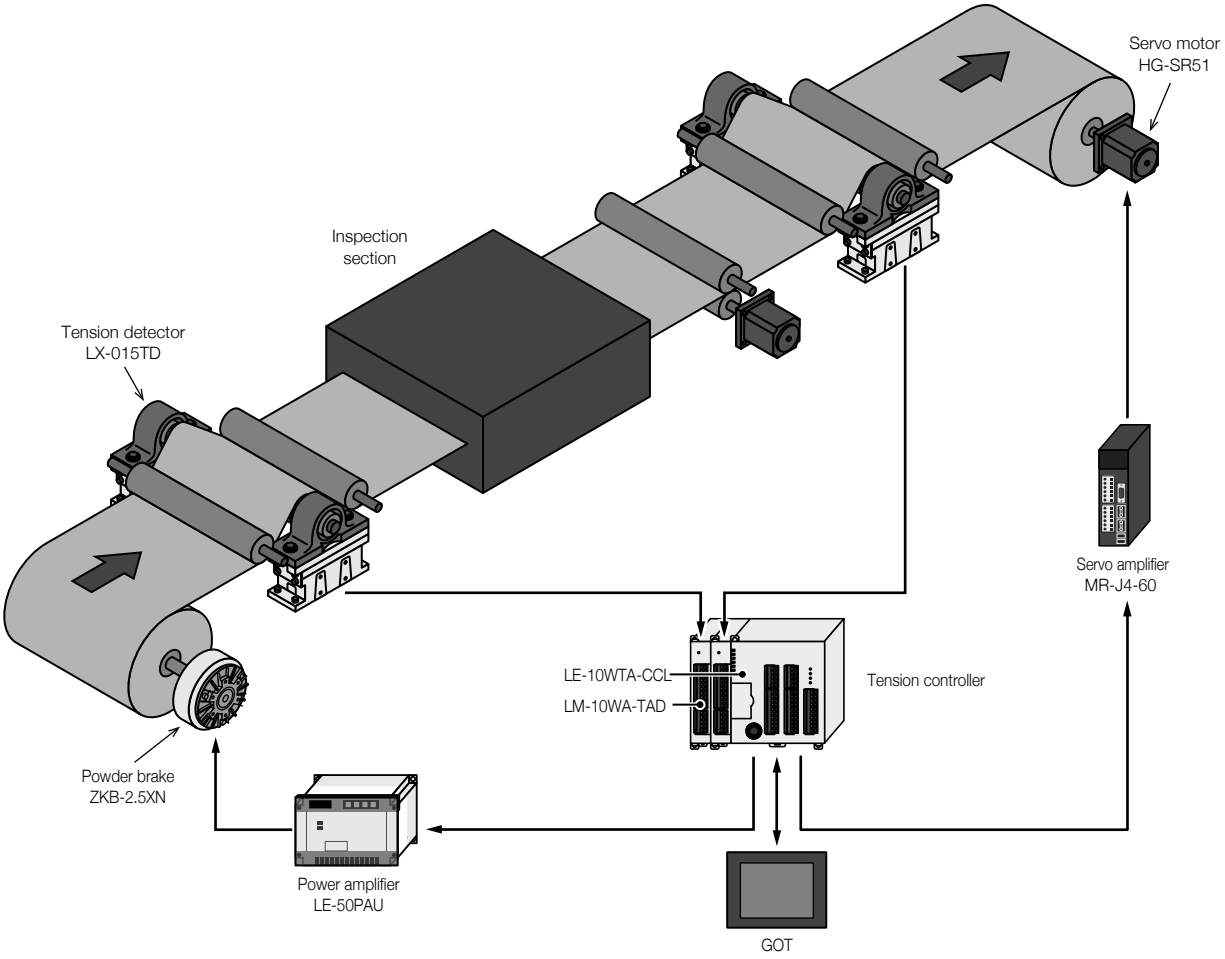

Features

- The tension detector input adapter LM-10WA-TAD is added to the tension controller LE-10WTA-CCL to control both the winding reel shaft and unwinding reel shaft.
- The graphic operation terminal (GOT) is used to set and monitor the tension for winding and tension for unwinding.

Use conditions

		Unwinding	Winding
Tension	N	44	44
Line speed	m/min	30 to 50	30 to 50
Reel diameter	ϕ	60 to 600	60 to 600

Applicable models

Unwinding	
Tension controller	LE-10WTA-CCL + LM-10WA-TAD (including winding)
Tension detector	LX-015TD
Power amplifier	LE-50PAU
Powder brake	ZKB-2.5XN

Winding	
Servo amplifier	MR-J4-60
Servo motor	HG-SR51

8-20 Steel plate plating line

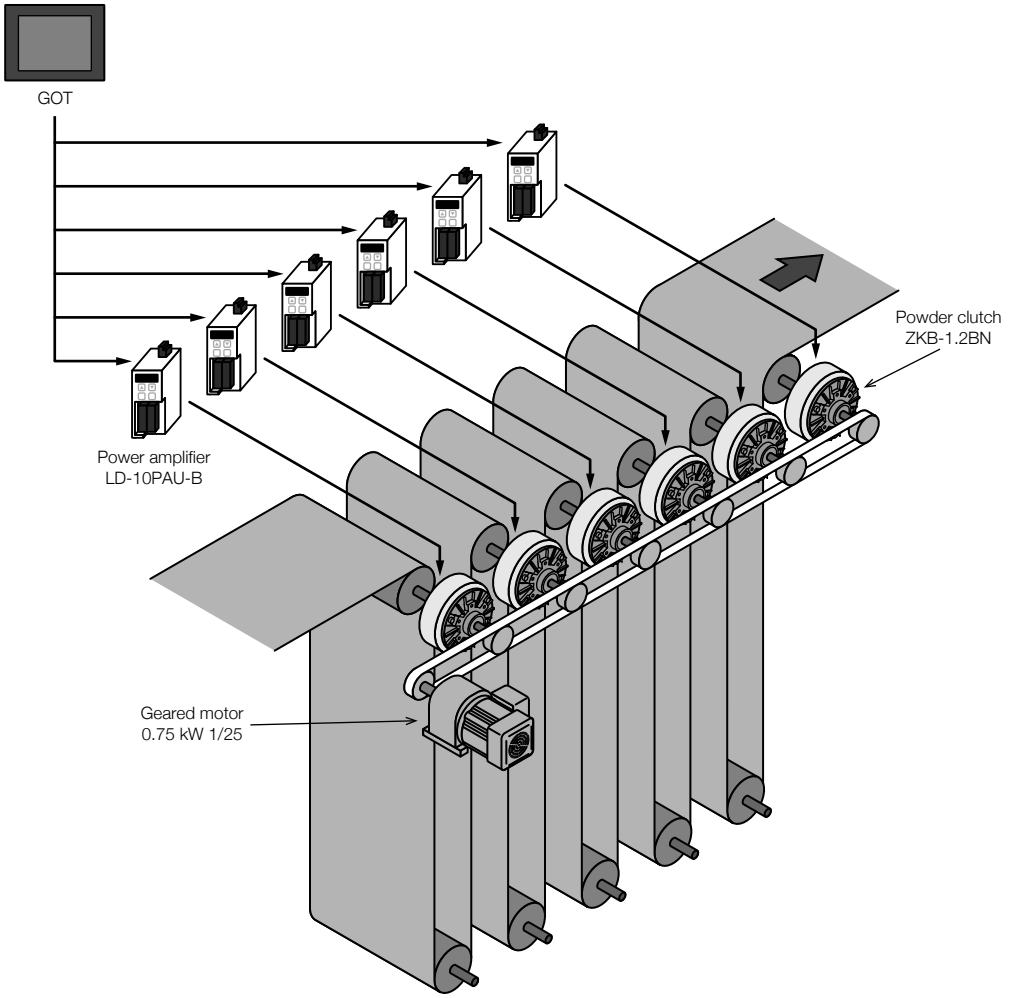

Features

- Because there are many roll shafts, the total mechanical loss is large. As measures to reduce the mechanical loss, the powder clutch is installed in each roll shaft to apply driving corresponding to the mechanical loss and eliminate the effect of the mechanical loss. This system is effective when there are many shafts but low-tension operation is required.
- Many amplifiers are connected through RS-485 communication, and one graphic operation terminal (GOT) sets parameters of many amplifiers in a batch.

Use conditions

Mechanical loss	N	1 to 7
Line speed	m/min	0.5 to 5
Roll diameter	ϕ	250

Applicable models

Powder clutch	ZKB-1.2BN
Power amplifier	LD-10PAU-B
Geared motor	0.75 kW 1/25

8-21 Static electricity eliminating device

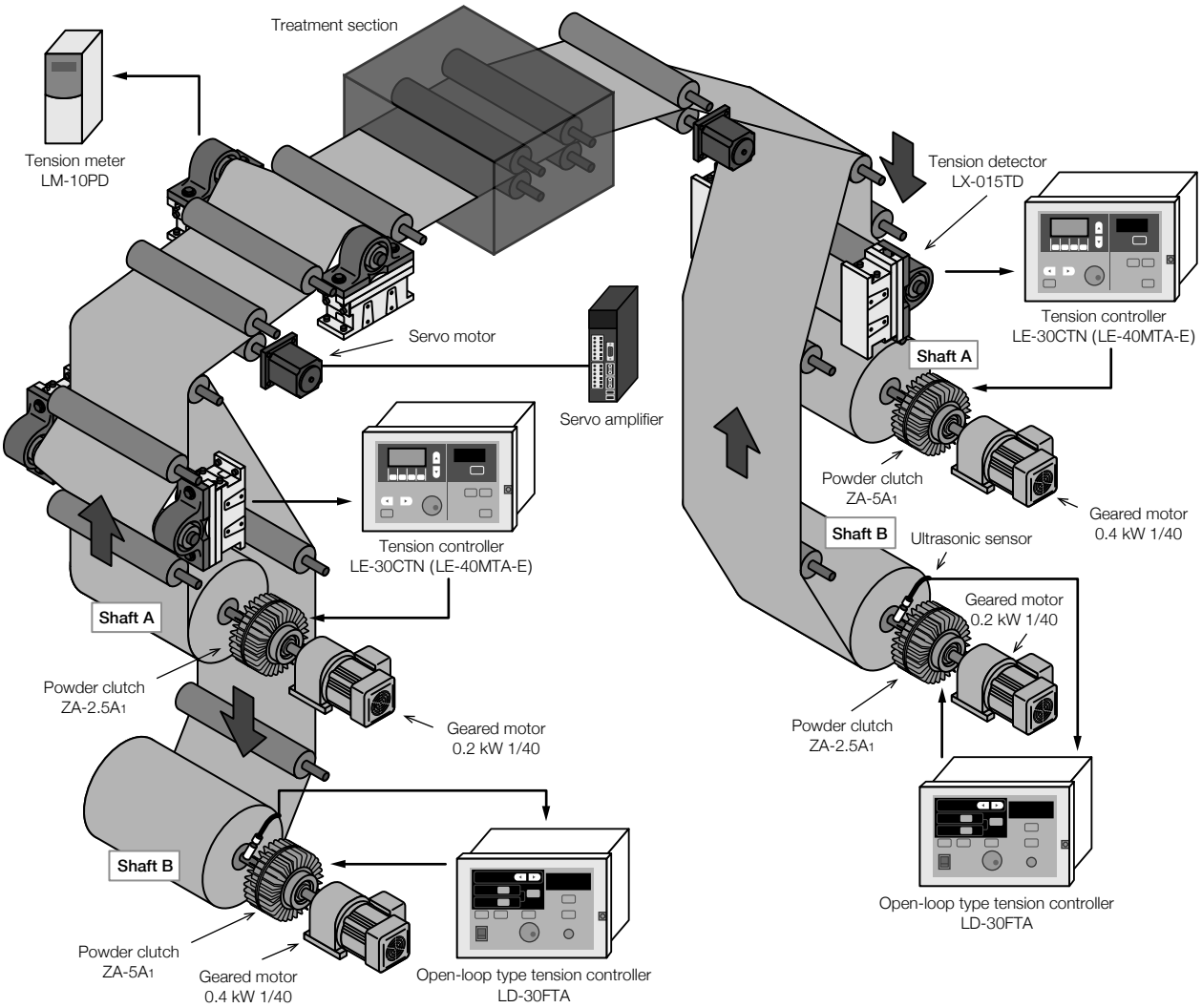

Features

- Because the hunting phenomenon may occur in the reel shaft rotating at extremely low (rotation) speed if the servo motor is used, the powder clutch is adopted.
- Because the line speed is extremely low, reverse rotation input of the powder clutch is effective in the unwinding section.
- Because the distance between rollers is short in the treatment section, draw control is adopted instead of the dancer roll.

Use conditions

		Unwinding	Winding
Tension	N	30 to 100	30 to 100
Line speed	m/min	1 to 15	1 to 15
Reel diameter	ϕ	85 to 400	85 to 400

Applicable models

	Unwinding	
Shaft A	Tension controller	LE-30CTN (LE-40MTA-E)
	Tension detector	LX-015TD
	Powder clutch	ZA-2.5A1 (Reverse rotation input)
	Geared motor	0.2 kW 1/40
Shaft B	Tension controller	LD-30FTA
	Powder clutch	ZA-2.5A1 (Reverse rotation input)
	Geared motor	0.2 kW 1/40

	Winding	
Shaft A	Tension controller	LE-30CTN (LE-40MTA-E)
	Tension detector	LX-015TD
	Powder clutch	ZA-5A1
	Geared motor	0.4 kW 1/40
Shaft B	Tension controller	D-30FTA
	Powder clutch	ZA-5A1 (Reverse rotation input)
	Geared motor	0.4 kW 1/40

In-feed area	
Tension detector	LX-015TD
Tension meter	LM-10PD

8-22 Slitter

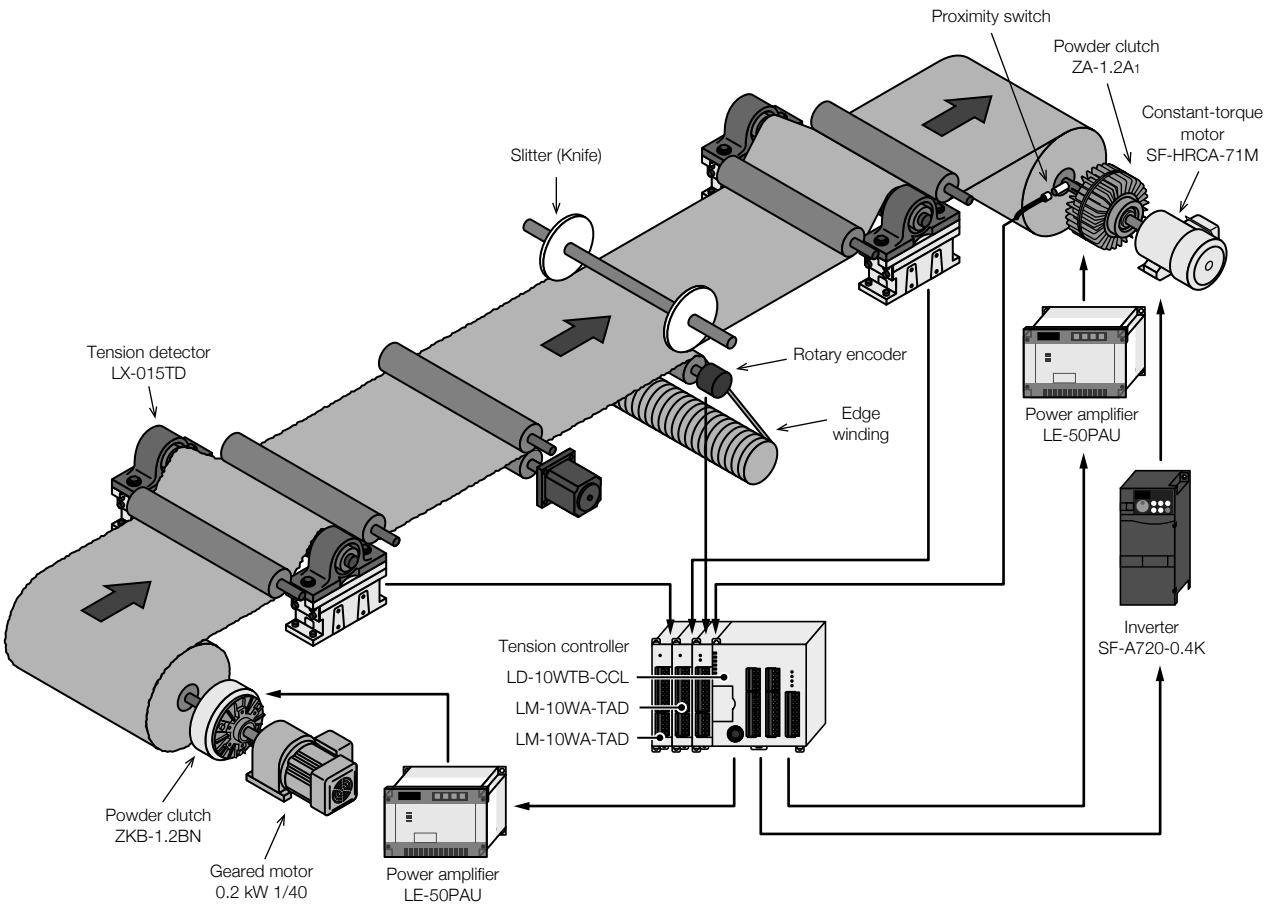

Features

- Constant-slip control is adopted in the winding section to mitigate the increase of the powder clutch capacity.
- External taper control is adopted so that the taper ratio can be changed in accordance with the reel diameter.
- Reverse input is adopted on the unwinding side because the line speed may be low.

Use conditions

		Unwinding	Winding
Tension	N	10 to 50	10 to 50
Line speed	m/min	5 to 30	5 to 30
Reel diameter	ϕ	96.2 to 600	96.2 to 600

Thickness	0.2 to 1.2 mm
Width	500 to 1200 mm
Mass	Max 280 kg

Applicable models

Unwinding	
Tension detector	LX-015TD
Power amplifier	LE-50PAU
Powder clutch	ZKB-1.2BN
Geared motor	0.2 kW 1/40

Winding	
Tension controller	LD-10WTB-CCL + LM-10WA-TAD × 2 units or LE-10-WTA-CCL + LM-10WA-TAD + LD-10WTB-DCA
Tension detector	LX-015TD
Power amplifier	LE-50PAU
Powder clutch	ZA-1.2A1
Constant-torque motor	SF-HRCA-71M
Inverter	FR-A720-0.4K

8-23 Laminator

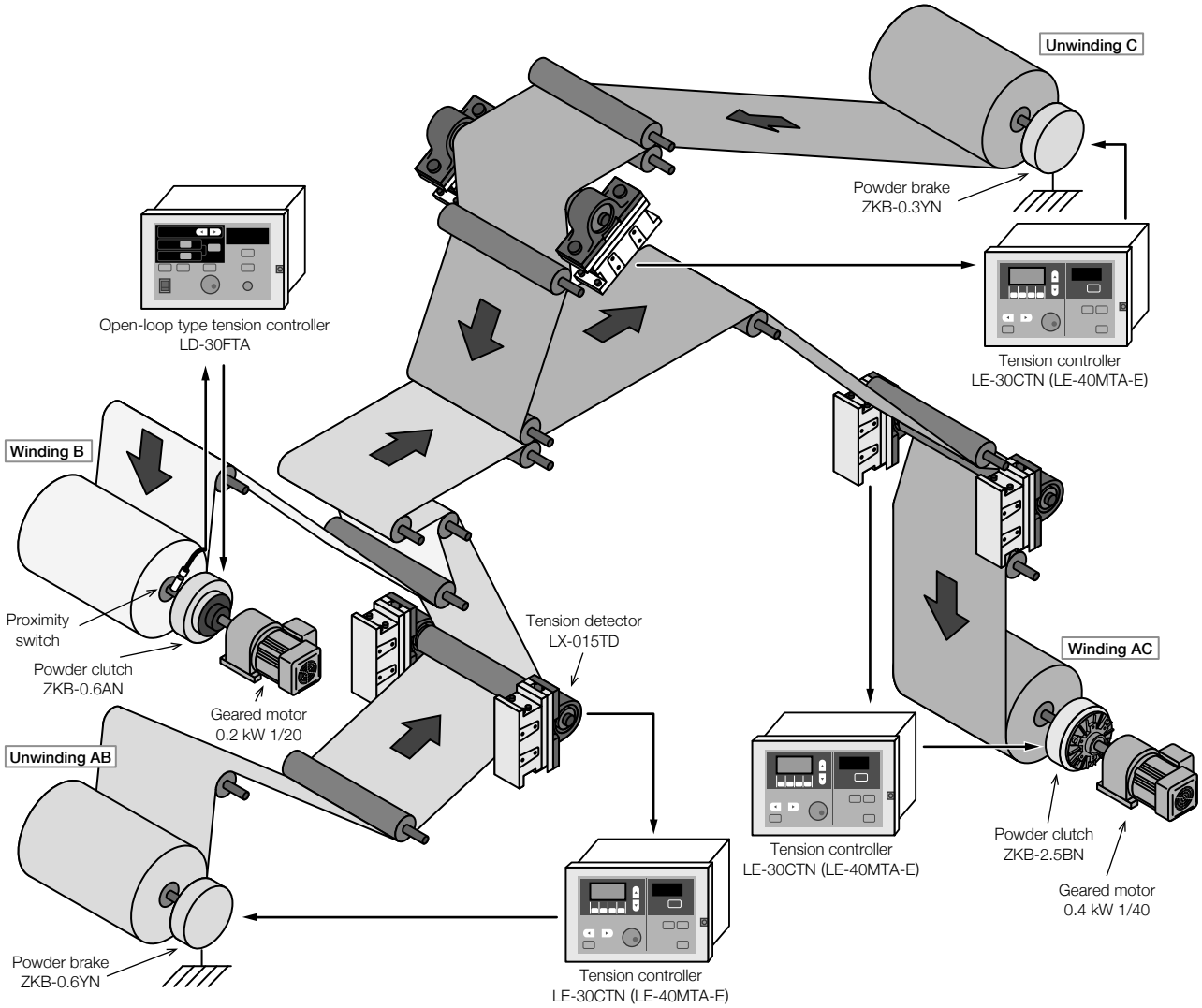

Features

- Feedback control is adopted on the unwinding side to improve the torque stability in the low torque area. (Closed-loop control is recommended in areas whose torque is 5% or less in the powder clutch/brake.)

Use conditions

		Unwinding	Unwinding	Winding	Winding
		AB	C	B	AC
Tension	N	30 to 100	20 to 50	20 to 50	30 to 100
Line speed	m/min	2 to 8	2 to 8	2 to 8	2 to 8
Reel diameter	ϕ	75 to 450	75 to 250	75 to 250	75 to 450

Applicable models

	Unwinding	
AB Unwinding	Tension controller	LE-30CTN (LE-40MTA-E)
	Tension detector	LX-015TD
	Powder brake	ZKB-0.6YN
C Unwinding	Tension controller	LE-30CTN (LE-40MTA-E)
	Tension detector	LX-015TD
	Powder brake	ZKB-0.3YN

	Winding	
B Winding	Tension controller	LD-30FTA
	Tension detector	LX-015TD
	Powder clutch	ZKB-0.6AN
	Geared motor	0.2 kW 1/20
AC Winding	Tension controller	LE-30CTN (LE-40MTA-E)
	Tension detector	LX-015TD
	Powder clutch	ZKB-2.5BN
	Geared motor	0.4 kW 1/40

8-24 Film processing machine

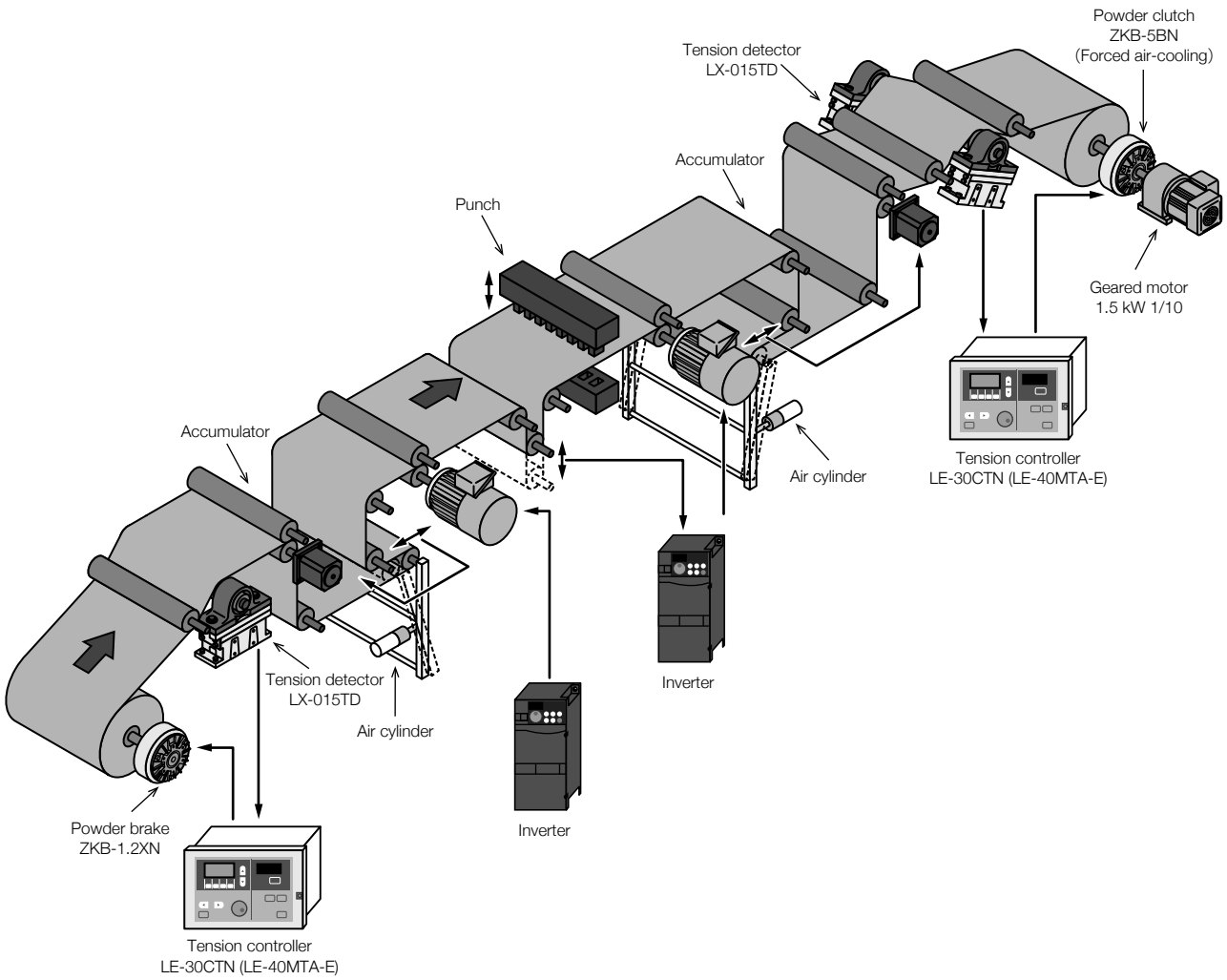

Features

- Because intermittent operation is performed for pressing the film, the accumulator is installed so that the processing does not stop.
- The forced air-cooling type powder clutch is adopted in the winding section to improve heat radiation.

Use conditions

		Unwinding	Winding
Tension	N	75	75
Line speed	m/min	10 to 40	10 to 40
Reel diameter	ϕ	90 to 800	90 to 800

Applicable models

Unwinding	
Tension controller	LE-30CTN (LE-40MTA-E)
Tension detector	LX-015TD
Powder brake	ZKB-1.2XN

Winding	
Tension controller	LE-30CTN (LE-40MTA-E)
Tension detector	LX-015TD
Powder clutch	ZKB-5BN (Forced air-cooling)
Geared motor	1.5 kW 1/10

MEMO

Chapter.9

Trouble Examples

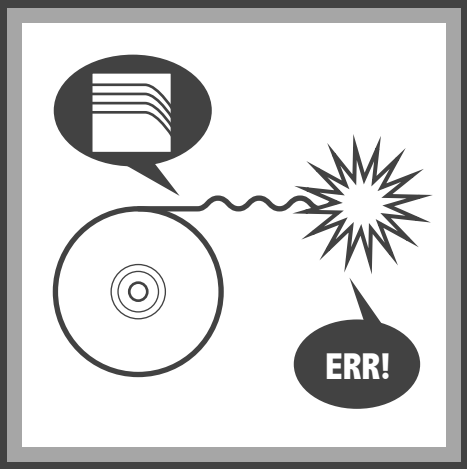

Trouble Examples

Trouble Examples

	Phenomenon	Countermeasures
Clutch /brake	Though the powder clutch/brake is used at the rated or lower torque, its temperature becomes extremely high. The surface temperature becomes 100 °C or more.	It is estimated that overload may be applied. The powder clutch/brake may be unavailable even if the used torque does not exceed the rated torque. It is necessary to check the heat generation quantity per unit time caused by slip (which is the product of the torque and slip rotation speed) based on the use conditions. It is necessary to restrict the torque when the slip rotation speed is high. Refer to the catalog for the allowable heat generation quantity per unit time caused by slip.
	The powder brake wobbles (does not rotate smoothly) at low speed. This phenomenon often occurs when the reel diameter is large.	It is estimated that the stick slip phenomenon has occurred in the powder brake. The stick slip phenomenon occurs more often when the reel diameter is large (that is, the load is large and the rotation speed is low), and occurs less often as the reel diameter becomes smaller (that is, the load is small and the rotation speed is high). The stick slip phenomenon occurs easily in the unwinding section (powder brake) when the line speed is low (10 m/min. or less). The countermeasures are increasing the slip rotation speed. It is effective to replace the powder brake with the combination of "powder clutch and reverse rotation motor". Other estimated factors on the machine side except the powder brake are the tension of the timing belt and the backlash of the gear. An estimated factor on the material side is elongation/shrinkage of the material.
	In the ZA type clutch, the bearing locks early. The idling torque is large.	It is estimated that the coil locking bolts are tightened too much. If the coil locking bolts are tightened too much on the mounting plate, excessive thrust load is applied on the bearing. When fixing the coil locking bolts on the mounting plate, provide proper backlash in both the axial direction and the rotation direction so that the thrust load is not applied on the bearing.

	Phenomenon	Countermeasures
Tension controller	The tension is too high at startup in the tension feedback type control. The material breaks off.	Turn ON/OFF the input signal in accordance with operation start/stop of the machine. If the input signal is kept ON, the control output becomes largest at the time of restart, and excessive tension is applied. If the input signal is turned OFF at a delayed timing when the machine is stopped, the control output may become large and excessive tension may be applied at the time of restart. Turn OFF the input signal at the same time the machine stops.
	The reel becomes loose when the reel diameter becomes small in open-loop control.	It is estimated that the looseness is caused by the nonlinear relationship in the small current area between the current and the torque in the powder clutch/brake. Use the nonlinearity correction function of the controller. Though the output voltage change ratio against changes in the reel diameter changes when nonlinearity correction is performed, it does not indicate error.
	The tension increases when the reel diameter becomes small in the unwinding section in automatic control.	It is estimated that the increase is caused by mechanical loss in the winding reel shaft. Check the control output of the controller. When the control output is "0", the increase is caused by mechanical loss. Major factors of mechanical loss are the bearing, gear, timing belt, etc. of the reel shaft. Mechanical loss tends to be larger as the gear ratio is higher. Reexamination is required as countermeasures such as selecting a bearing whose idling torque is small, connecting the reel shaft directly to the elastic coupling without using a gear, decreasing the tension of the timing belt, etc.
	Hunting occurs in the material in feedback control.	Check whether hunting occurs in manual operation. If hunting occurs in manual operation, the factors are vibration, mechanical loss fluctuation, etc. in the machine. Check the machine. If hunting does not occur in manual operation but occurs in automatic operation, it is estimated that the control gain is high. Adjust the control gain.
Tension detector	The zero point is often deviated though the zero point/span adjustment is completed.	It is estimated that the deviation is caused by the effect of mounting the tension detector. Major estimated factors are as follows: - The detector mounting face is not horizontal. - The detector mounting face height is different between the both ends when the detection roller is supported at the both ends. - The detection roller is imbalanced. - The detection roller length has changed due to temperature changes.
	The load becomes excessive during span adjustment though the sum of the roll load and tension load is less than the rated load.	The set value of the tension full scale may be improper. - The set value of the tension full scale remains in the default (500 N). - The full scale tension is too high compared with the maximum tension to be controlled actually. The recommended full scale tension is approximately 1.2 to 1.5 times the actually controlled tension.

MEMO

Chapter.10

Questions and Answers

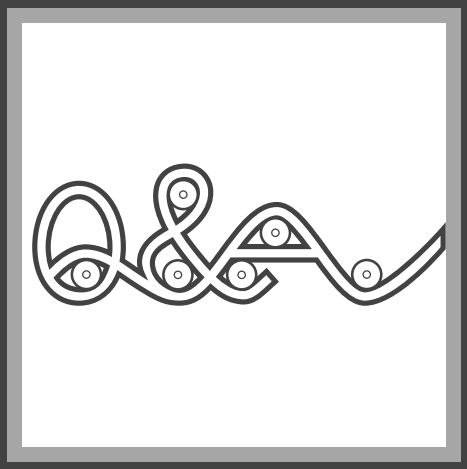

10-1 Frequently asked questions about powder clutches and powder brakes

Q1: How much is the dispersion of the torque in the powder clutch/brake?

A1: In catalogs, the standard torque characteristics (representative example) indicate the standard values of new products at the speed "200 r/min.". Because powders deteriorate due to aging, the standard characteristics change accordingly. Cope with changes in the torque characteristics by adjusting the current.
The dispersion of the torque at around the rated current is approximately ±10% in the product single unit.
The dispersion among products is approximately ±15% from the standard torque characteristics.
It is recommended to design such a system that the current can be adjusted in each powder clutch/brake when operating multiple powder clutches/brakes in parallel.

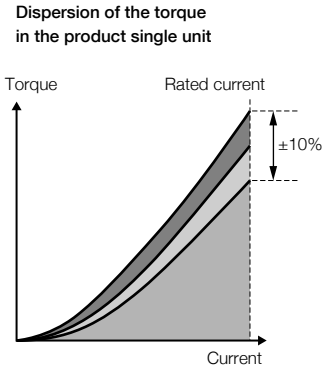

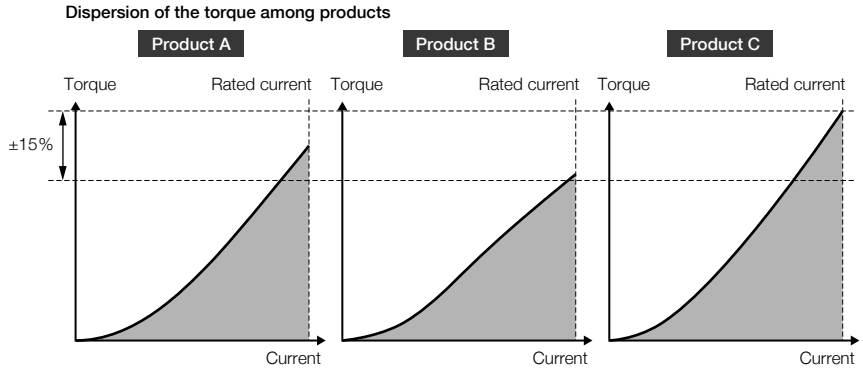

Q2: How can we judge the life expiration (overhaul timing) of the powder clutch/brake?

A2: While the powder clutch/brake is used for a long time, oxidation advances in powders and the generated torque becomes smaller.
As the rough standard, think that the life is expired when the torque decreases by 30% or more from the initial value.
If it is difficult to measure the torque, judge the life expiration based on the "manufactured product finished status" and the fact that "the torque is insufficient even if the variable resistor for setting is set to the maximum value".

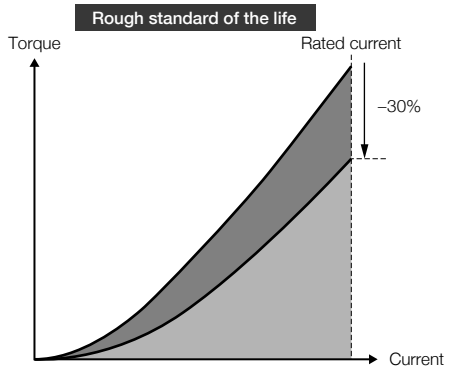

Q3: Does the power supply unit for the powder clutch/brake have the polarity (+ and -)?

A3: The powder clutch/brake uses the DC power supply unit, but it does not have the polarity.

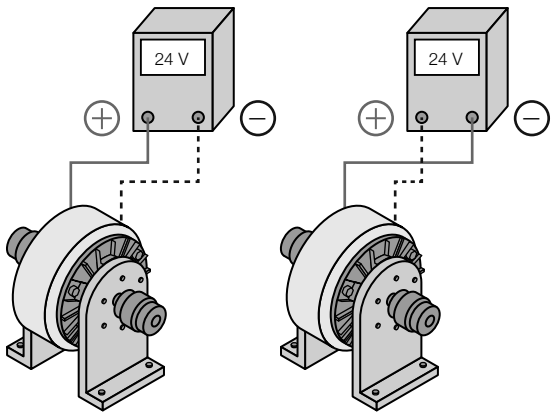

Q4: Why is the feeling of the shaft weight dispersed when the shaft is rotated after the powder clutch/brake is connected to the machine?

A4: The shaft feels heavy because the shaft diameter is small and powders are distributed unevenly before the running-in operation.
The dispersion is large because the degree of unevenness of the powder distribution varies among products. Check the feeling of the shaft weight again after performing the running-in operation.

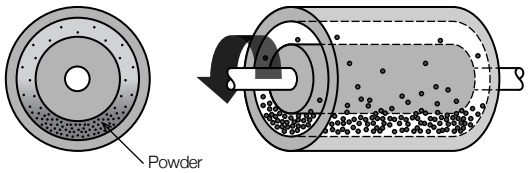

Q5: We would like to use the powder clutch/brake with its shaft set vertical.

A5: Both the powder clutch and the powder brake are designed to be used in such installation status that the shaft is set horizontal in principle.
If the powder clutch/brake is used with its shaft set vertical, powders will not be distributed evenly, the torque will be lower, fluctuate or become uneven, and the original performance cannot be obtained.

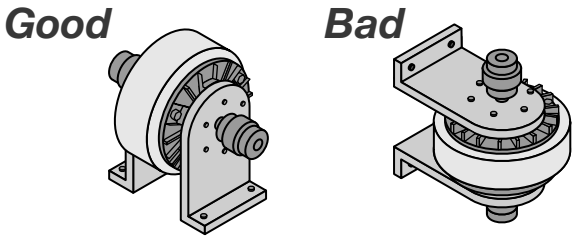

Q6: We would like to use the ZKB-40BN with the mounting plate only on one side.

A6: Install the mounting plate on the both sides in principle when using the ZKB-5BN or upper models because the shaft load and powder clutch self weight are applied on the mounting area.

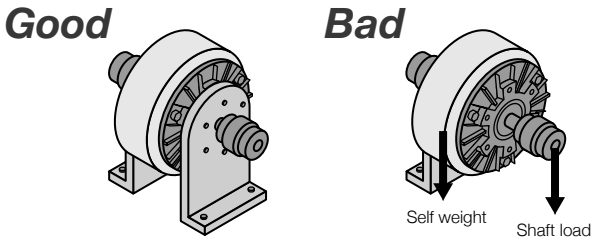

Q7: We would like to use the ZKB-10BN as a brake because we do not have the ZKB-10XN.

A7: The ZKB-10BN can be used as a brake when its output shaft is fixed,

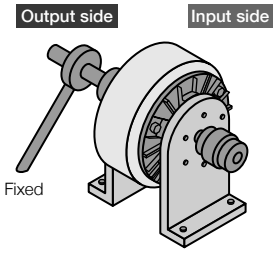

Q8: What is the proper water temperature in the water-cooling type?

A8: Supply water of ordinary temperature.
If the water temperature is low compared with the room temperature, dew condensation may occur due to the difference in the temperature.

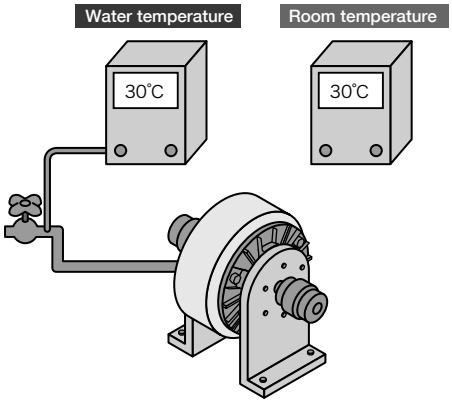

Q9: What is the allowable surface temperature of the powder clutch/brake?

A9: The table below shows the limit surface temperature allowed in continuous operation.
If the surface temperature exceeds the value below, the durability will be considerably deteriorated.

Model	• Natural cooling • Thermo block • Water-cooling type ZKB-WN 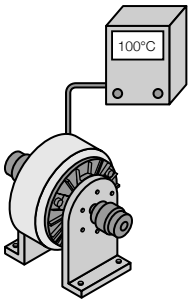	Forced cooling 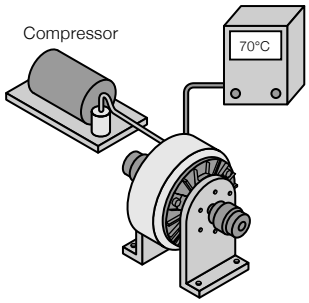
Limit temperature (Rough standard)	100°C or less	70°C or less

Q10: We would like to use the powder clutch/brake outdoors.

A10: The powder clutch/brake is designed to be used inside the factory, and cannot be used outdoors in principle. If using the powder clutch/brake outdoors, realize an environment similar to the indoor environment by attaching a cover if the powder clutch/brake will be exposed to water drops, oil drops, sand dust, sea wind, etc., for example. In addition, prevent dew condensation.

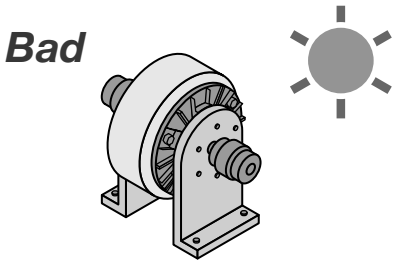

Q11: We would like to use the powder clutch/brake in vacuum.

A11: It is not possible to use the powder clutch/brake in vacuum because the slip heat cannot be radiated to the air and the allowable heat generation quantity per unit time caused by slip is extremely low.

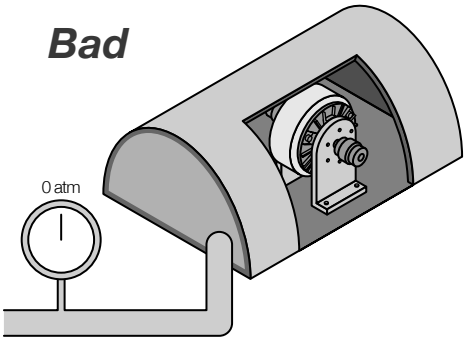

Q12: We would like to use the powder clutch/brake in the clean room.

A12: It is not possible to use the powder clutch/brake in the clean room in principle because the powder clutch/brake does not have a complete sealing structure and fine powders generated by use may leak.
When covering the powder clutch/brake, cover the entire moving parts because dust is generally generated from other moving parts such as gear and belt.

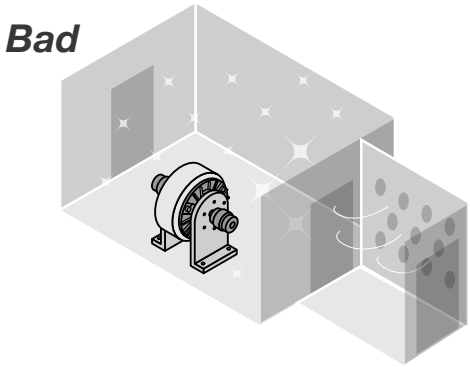

Q13: What is the use upper limit of the powder clutch/brake?

A13: The rated torque is the upper limit.
Though the powder clutch/brake is so designed as to offer a torque higher than the rated torque at the time of shipment from the factory under consideration of deterioration due to aging, the powder clutch/brake is not guaranteed if it is used at a torque above the rated torque.

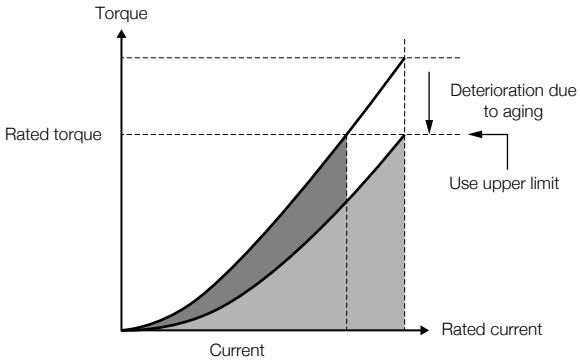

Q14: Is the rotation direction specified for the powder clutch/brake?

A14: The powder clutch/brake can rotate in either direction because rotation does not have the directivity.

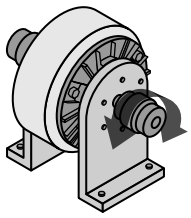

Q15: Please explain the life of the powder clutch/brake.

A15: Powders are oxidized while the powder clutch/brake is used for a long time, and the torque decreases accompanied by the oxidation. When the powder clutch/brake is used for winding or unwinding with the allowable heat generation quantity per unit time caused by slip, the life of powders is generally 5,000 to 8,000 hours.
This value is determined on condition that the powder life is regarded to be expired when the torque decreases until the rated value at the rated current.
The life is longer if the powder clutch/brake is used at a torque lower than the rated torque because powders can be used continuously.
As the rough standard, think that the powder life is expired and the powder clutch/brake requires overhaul when the torque decreases by 30% or more from the initial value.
If it is difficult to measure the torque, judge the life expiration based on the "manufactured product finished status" and the fact that "the torque is insufficient even if the variable resistor for setting is set to the maximum value".
The powder life can be made longer if the powder clutch/brake is used with sufficient margin from the allowable heat generation quantity per unit time caused by slip. For example, if the powder clutch/brake is used with the heat generation quantity per unit time caused by slip 50% of the allowable value, the powder life may be twice or more.
On the contrary, if the powder clutch/brake is used with the heat generation quantity per unit time caused by slip above the allowable value, oxidation of powders may advance drastically, decrease of the torque may be accelerated, and parts may be damaged.
Even when the heat generation quantity per unit time caused by slip is same, the powder life tends to be short if the slip rotation speed is continuously high. Set the system so that the slip rotation speed becomes as low as possible.

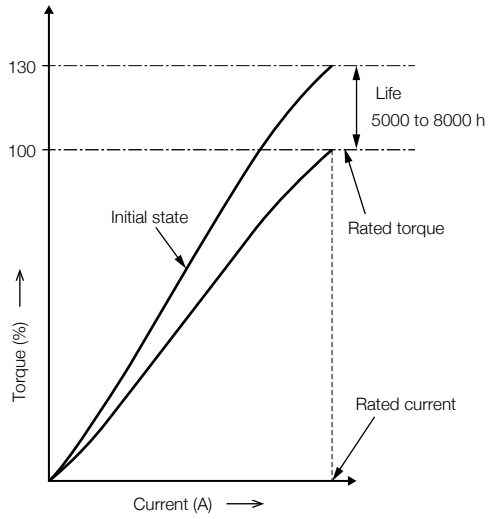

Q16: Which is the input/output shaft of the powder clutch?

A16: "IN (input side)" and "OUT (output side)" are indicated on the product nameplate.
The nameplate attached on the outer periphery of the product indicates the information required to control the product.

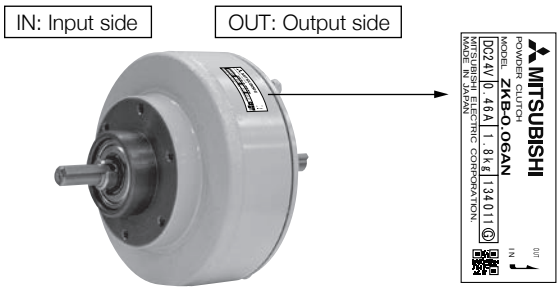

Q17: Which one between the input shaft and the output shaft of the powder clutch should be connected to the high-speed rotation side?

A17: Connect the input side (IN) to the high-speed rotation side, and connect the output side (OUT) to the low-speed rotation side. Connecting the input side (IN) to the high-speed rotation side leads to stable torque and long powder life.
Powders are filled between two rotating bodies.
When each rotating body is rotated individually respectively, powders move as follows:

- When the input side is rotated
  Powders receive the centrifugal force from the input side, adhere on the inner circumference on the input side, and are distributed stably.
- When the output side is rotated
  Powders receive the centrifugal force from the output side, and scatter from the output side.
  Because powders are always moving, they are distributed unevenly.

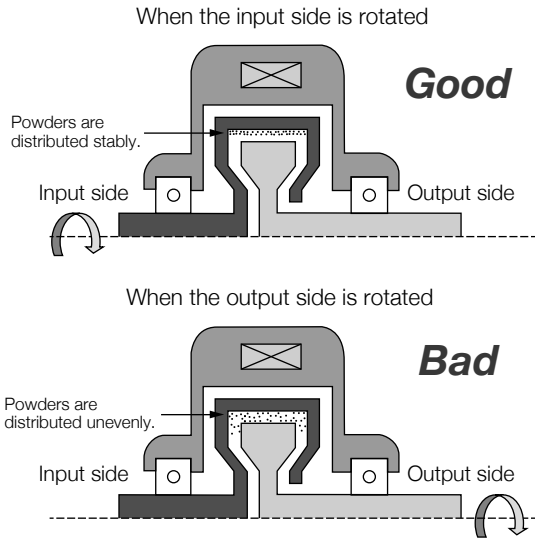

Q18: Please explain how to install the ZKG-AN type powder clutch.

A18: The ZKG-AN type powder clutch should be handled carefully because its input shaft and output shaft are different from those of other types.
In the ZKG-AN, outputs are provided on the left and right sides. Select either one in accordance with the equipment to be combined.

Target models:
ZKG-5AN, ZKG-10AN, ZKG-20AN and ZKG-50AN

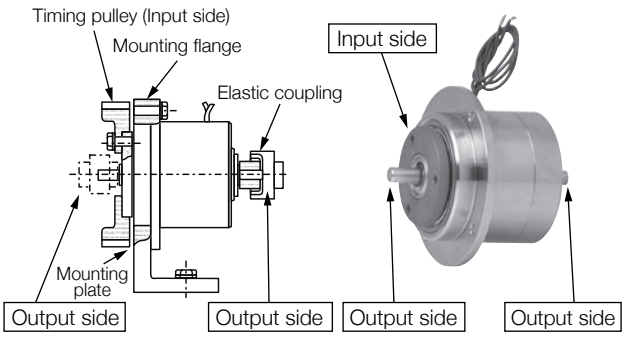

Q19: What is the idling torque of the powder clutch/brake?

A19: The idling torque refers to the drag torque which is generated by powders, bearings, etc., and is generated even while the power is OFF.
The idling torque is 1 to 10% of the rated torque. The actual value varies depending on the model. Refer to the corresponding manual and catalog for the details.
Because the powder clutch/brake cannot output a torque smaller than the idling torque, consider the idling torque also when selecting a powder clutch/brake to be used.

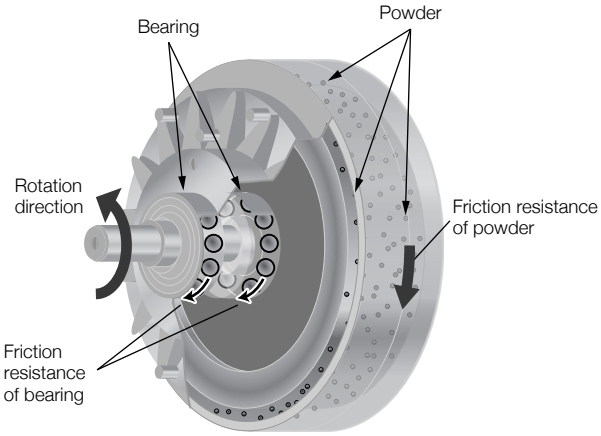

10-2 Frequently asked questions about tension controllers

Q1: Is it possible to use the existing power supply unit even if the powder clutch/brake model is changed?

A1: The existing power supply unit can be used when the rated current of the newly adopted powder clutch/brake is smaller than the current capacity of the power supply unit.

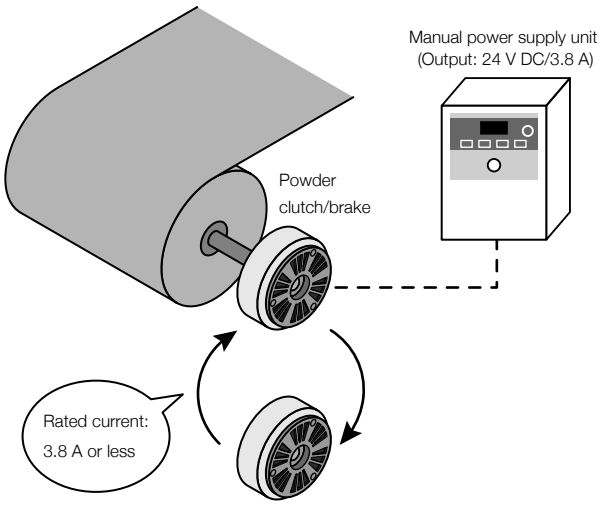

Q2: What will occur when the output terminals are short-circuited in the controller and manual power supply unit?

A2: The short-circuit protection circuit operates.
Release the short-circuit area, turn OFF the power, wait for 30 seconds, and then turn ON the power again to recover the system.

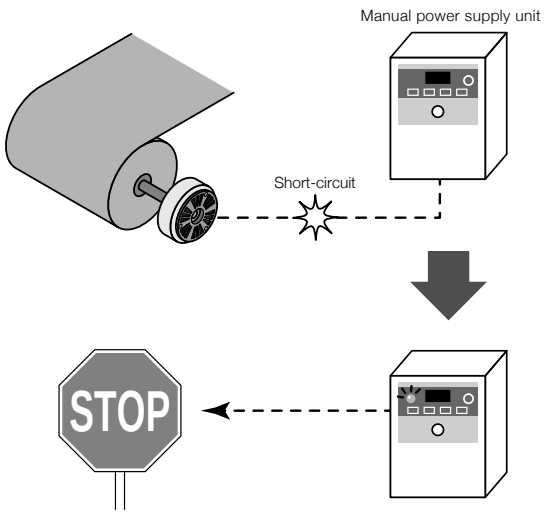

Q3: Can one power supply unit work for multiple powder clutches/brakes?

A3: One power supply unit is available for multiple powder clutches/brakes as far as the rated current of the powder clutch/brake multiplied by the number of powder clutches/brakes does not exceed the current capacity of the power supply unit.
However, the torque may be different among the powder clutches/brakes used together even if the output is same because the performance is not equivalent among the powder clutches/brakes.

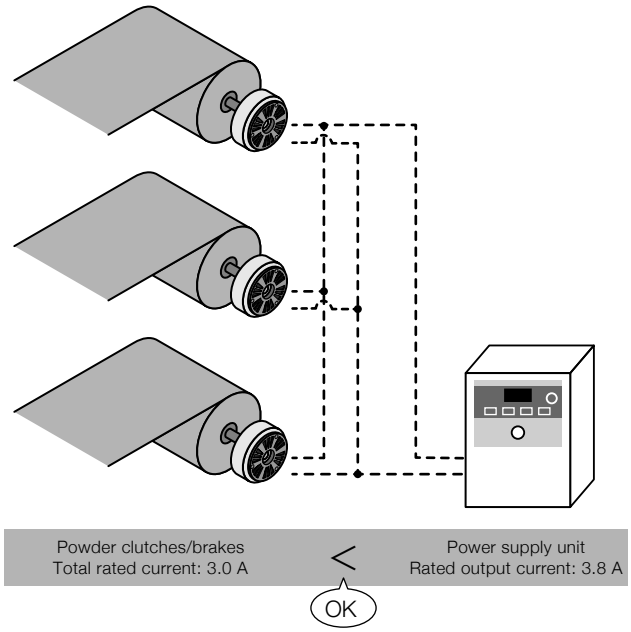

Q4: We would like to indicate the tension while using the manual power supply unit or open-loop type controller.

A4: The manual power supply unit and open-loop type controller cannot indicate the tension.
The tension detector and tension meter are required separately for indicating the tension.

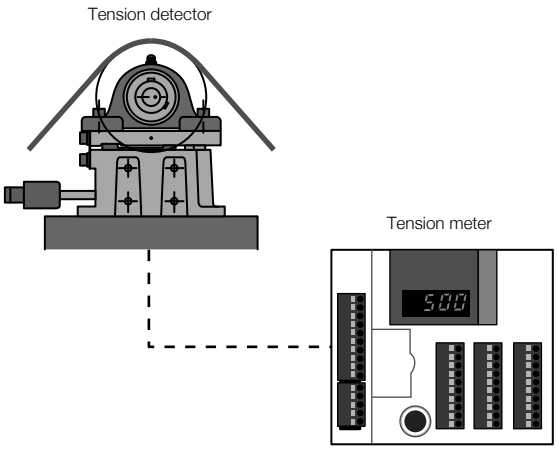

Q5: The length of the cable (7 m in the non-explosion-proof specifications, 20 m in the explosion-proof specifications) supplied as an accessory of the tension detector is insufficient. Can it be extended?

A5: The optional extension cable (50 m) is available.
Contact the sales agent you are dealing with.

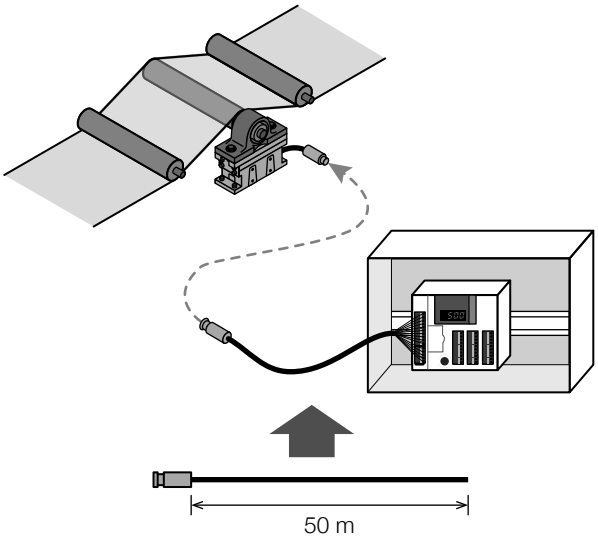

Q6: What is a hinge of the tension detector?

A6: A flat spring supported on only one side is incorporated in the tension detector, and its bend is detected.
The supporting point of the flat spring is called hinge.
If the resultant force of the tension faces the hinge direction, the flat spring bends by less than the degree corresponding to the actual tension, and the tension detection accuracy is bad. This should be considered when selecting the tension detector.

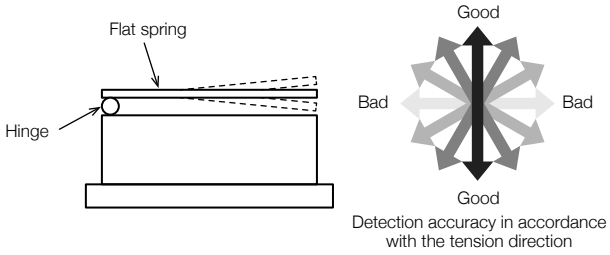

Q7: Why is the tension detector not displaced even if the load is applied?

A7: It is estimated that the pillow block mounting bolts are interfering with the housing.
As countermeasures, use shorter bolts to prevent the interference.

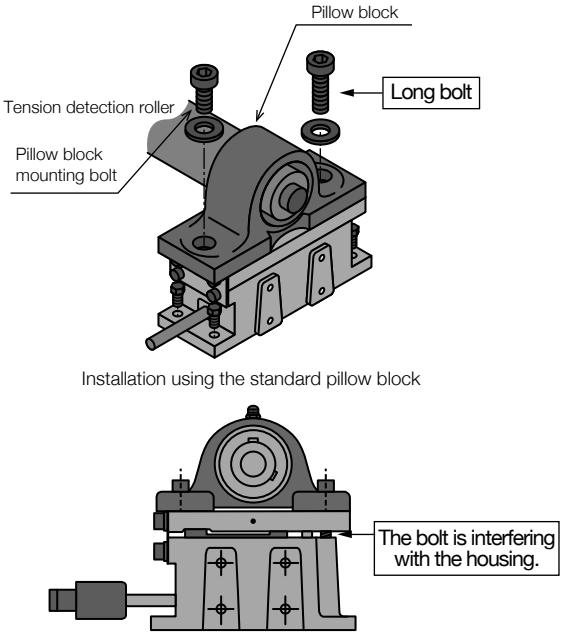

Q8: Why do torque fluctuations and hunting occur (especially in the low torque area)?

A8: It is estimated that the mechanical loss gives some effect.
As countermeasures, it is necessary to reduce the mechanical loss.
Major factors of the mechanical loss are sliding resistance of the bearing which supports the reel shaft and the gear installed between the reel shaft and the brake.
As the gear ratio is higher, the mechanical loss tends to be larger.
Because the mechanical loss is not constant but fluctuates, it may cause tension fluctuations and hunting.
Hunting can occur easily in the low torque area (where the output voltage is low) because the reel shaft torque is affected considerably by the torque caused by the mechanical loss.

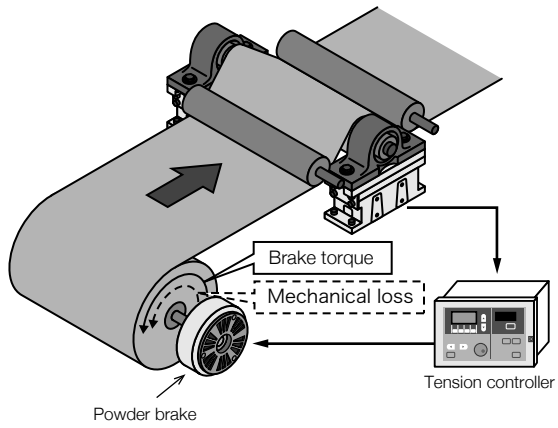

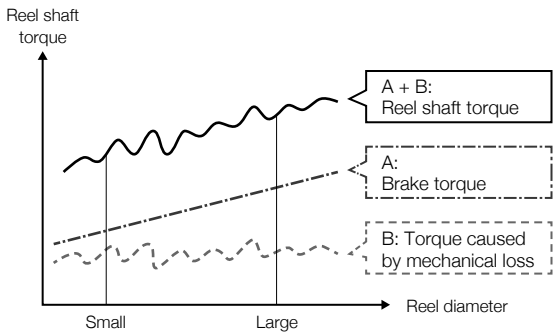

Q9: Why does the tension not increase immediately after the line driving is started in winding control using the powder clutch?

A9: It is estimated that the material was slack when the machine was stopped.
As countermeasures, drive the winding motor in advance before driving the machine main motor so that the material is not slack when the tension controller is started.

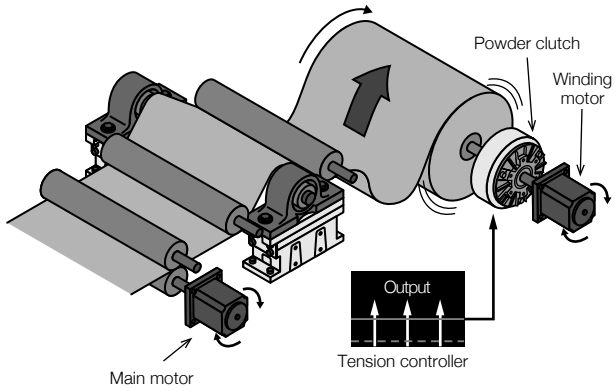

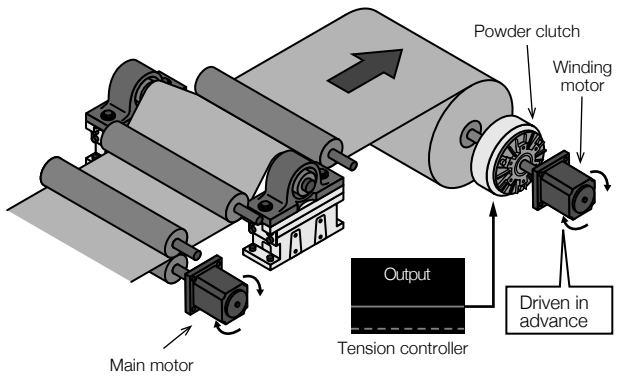

Q10: Why does the tension increase as the reel diameter becomes smaller on the unwinding side in closed-loop tension control?

A10: It is estimated that the mechanical loss gives some effect.
The mechanical loss is regarded as the cause when the voltage applied on the powder brake is "0".
As countermeasures, it is necessary to reduce the mechanical loss. Major factors of the mechanical loss are sliding resistance of the bearing which supports the reel shaft and the gear installed between the reel shaft and the brake. As the gear ratio is higher, the mechanical loss tends to be larger.

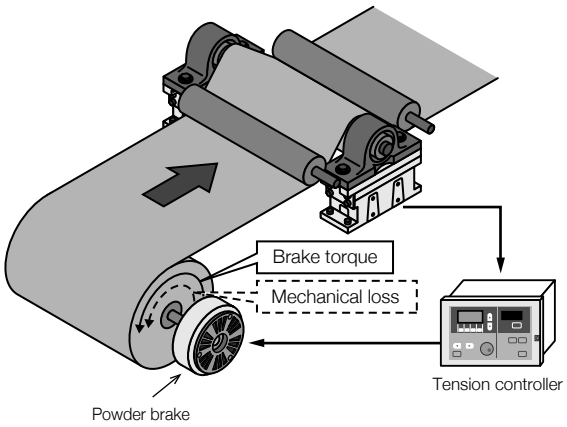

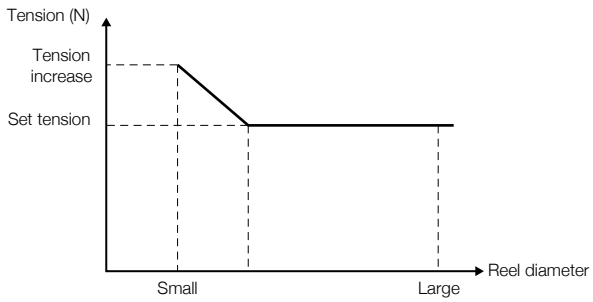

Q11: Why does the tension easily decrease when the reel diameter is small in open-loop control?

A11: It is estimated that the powder characteristics (nonlinearity in the low torque area) give some effect.
As countermeasures, use the powder nonlinearity correction function which improves the torque characteristics in the low current area.

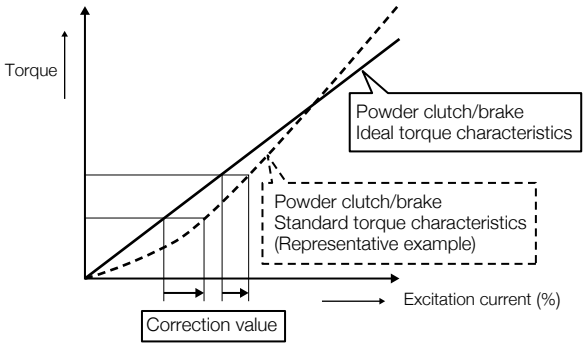

Trademarks and registered trademarks

- Pressductor is a registered trademark of ABB Automation Products.
- Other product and company names are either trademarks or registered trademarks of their respective owners.

ELECTROMAGNETIC CLUTCHES AND BRAKES
<Powder type·Hysteresis type>
TENSION CONTROLLERS

MITSUBISHI ELECTRIC CORPORATION
HEAD OFFICE: TOKYO BLDG., 2-7-3, MARUNOUCHI, CHIYODA-KU, TOKYO 100-8310, JAPAN
http://Global.MitsubishiElectric.com

HIME-SM004-A1410(MEE) Printed in Japan

New publication, effective Oct. 2014
Specifications subject to change without notice.