for a greener tomorrow

MITSUBISHI ELECTRIC
Changes for the Better

FACTORY AUTOMATION

ELECTROMAGNETIC CLUTCH/BRAKE TENSION CONTROLLER GENERAL CATALOG 2019

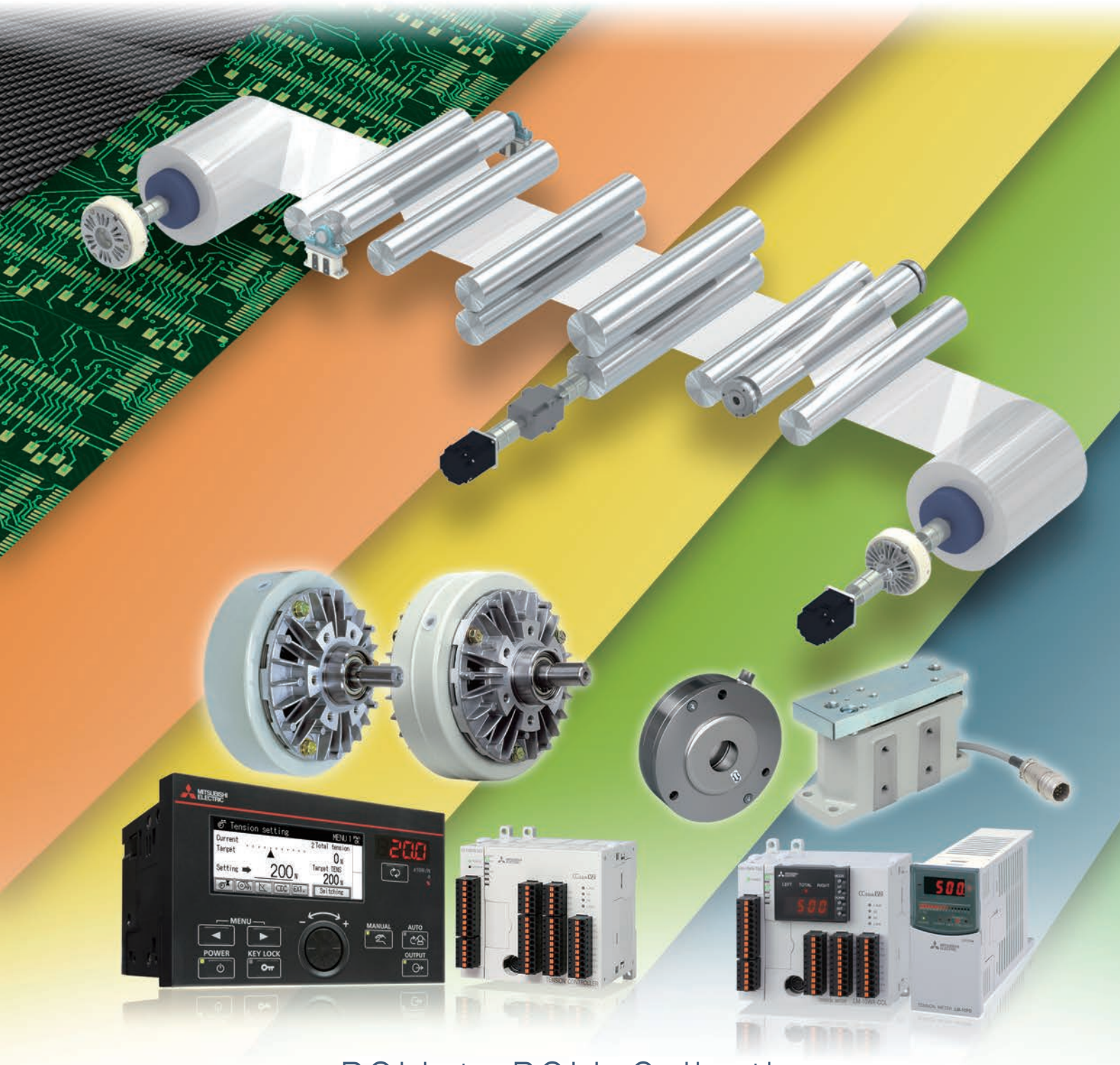

ROLL to ROLL Collection

GLOBAL IMPACT OF MITSUBISHI ELECTRIC

Through Mitsubishi Electric's vision, "Changes for the Better" are possible for a brighter future.

Changes for the Better

We bring together the best minds to create the best technologies. At Mitsubishi Electric, we understand that technology is the driving force of change in our lives. By bringing greater comfort to daily life, maximizing the efficiency of businesses and keeping things running across society, we integrate technology and innovation to bring changes for the better.

Mitsubishi Electric is involved in many areas including the following

Energy and Electric Systems
A wide range of power and electrical products from generators to large-scale displays.

Electronic Devices
A wide portfolio of cutting-edge semiconductor devices for systems and products.

Home Appliance
Dependable consumer products like air conditioners and home entertainment systems.

Information and Communication Systems
Commercial and consumer-centric equipment, products and systems.

Industrial Automation Systems
Maximizing productivity and efficiency with cutting-edge automation technology.

OVERVIEW

INTRODUCTION 4

ELECTROMAGNETIC CLUTCH/BRAKE

Powder Clutch/Brake A-4

Tension Controller

Tension Controller B-4

Clutch Amplifier B-48

Tension Meter/Tension Amplifier B-56

Tension Detector B-65

Common Item

Mechanical Load Torque Calculation Method C-2

How to Determine the Moment of Inertia *J* C-3

Moment of Inertia *J* Calculation Quick Reference Table C-5

SI Unit and Non-SI Unit Conversion Table C-6

Product List C-7

Roll-to-Roll control equipment

The Roll-to-Roll control equipment proposed by Mitsubishi Electric Corporation offers a capability for simple and efficient combinations of FA equipment to expand the capacity of tension control. While each product improves the productivity in each field, establishing a network environment improves the visualization of production lines. Using Mitsubishi Electric FA equipment for the entire production and processing of a variety of long materials such as film, textiles, and printable electronics maximizes the advantages.

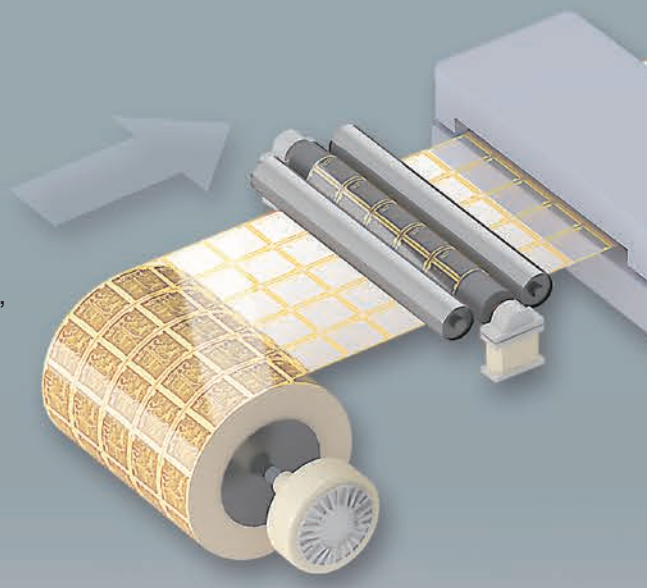

Unwinding

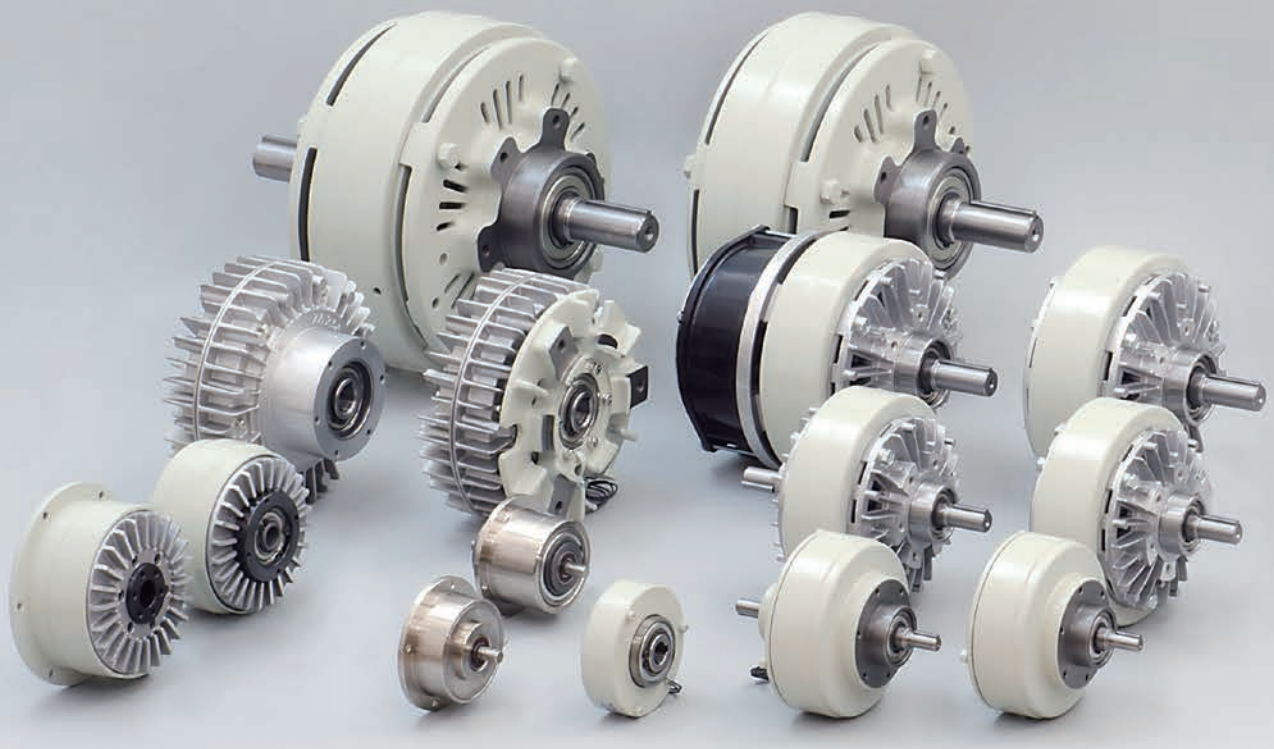

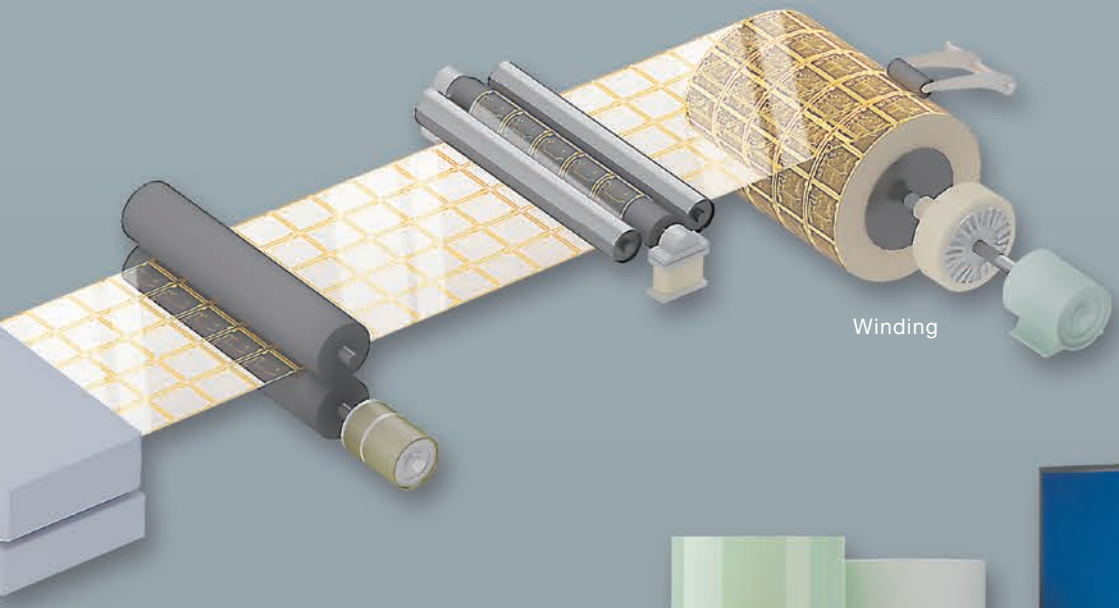

Winding

LE7-40GU-L
tension controller

LX7-F flange-type
tension detector

System Components for Unwinding and Winding Machines

For winding and unwinding machines for long materials such as paper, film, thread, electric wire, various sheets, and tape, technology for controlling the material tension is important to ensure higher speed and performance.
As a general electric manufacturer, Mitsubishi Electric provides system components for various products ranging from actuators such as clutches and brakes to tension controllers that control them.

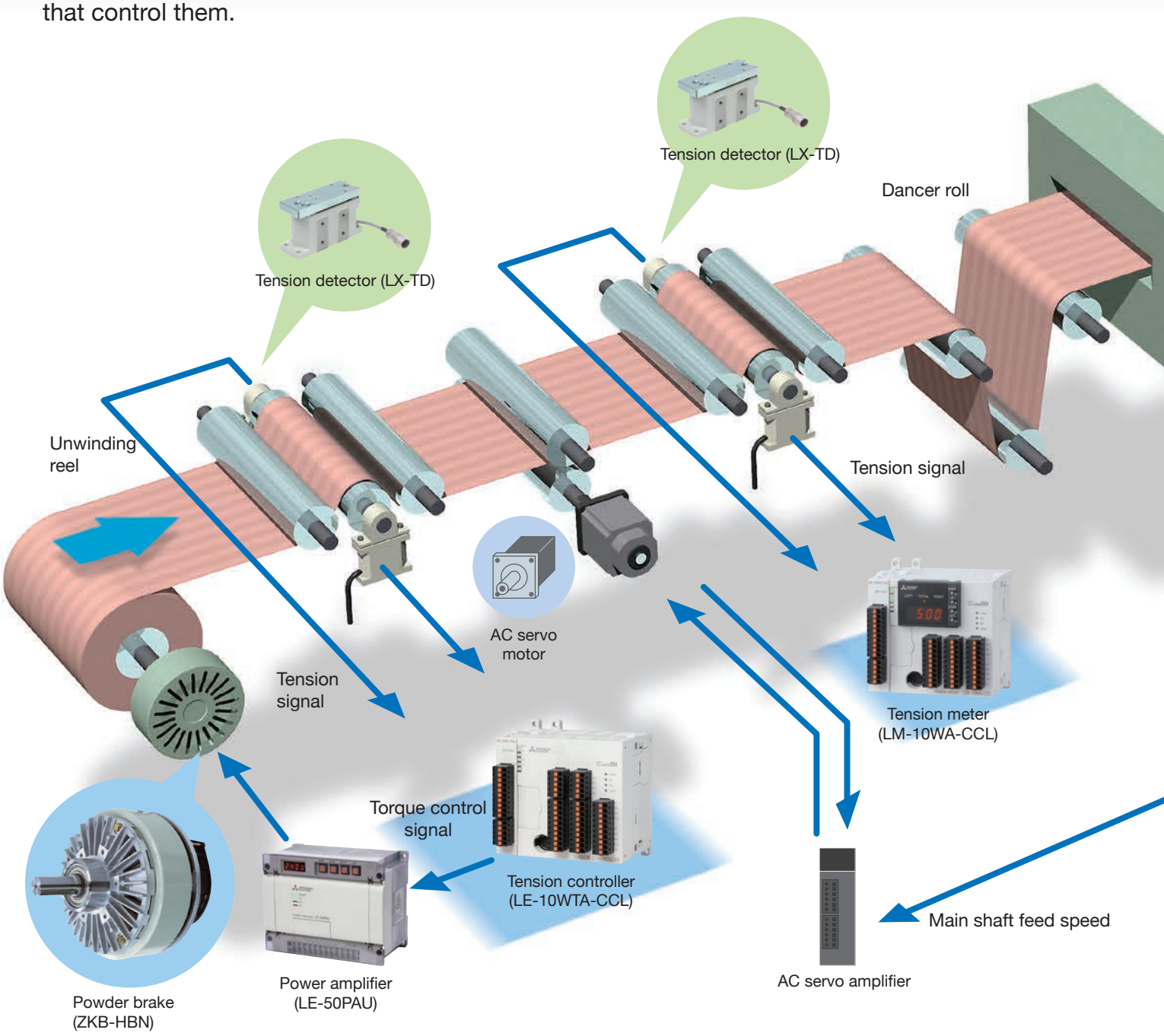

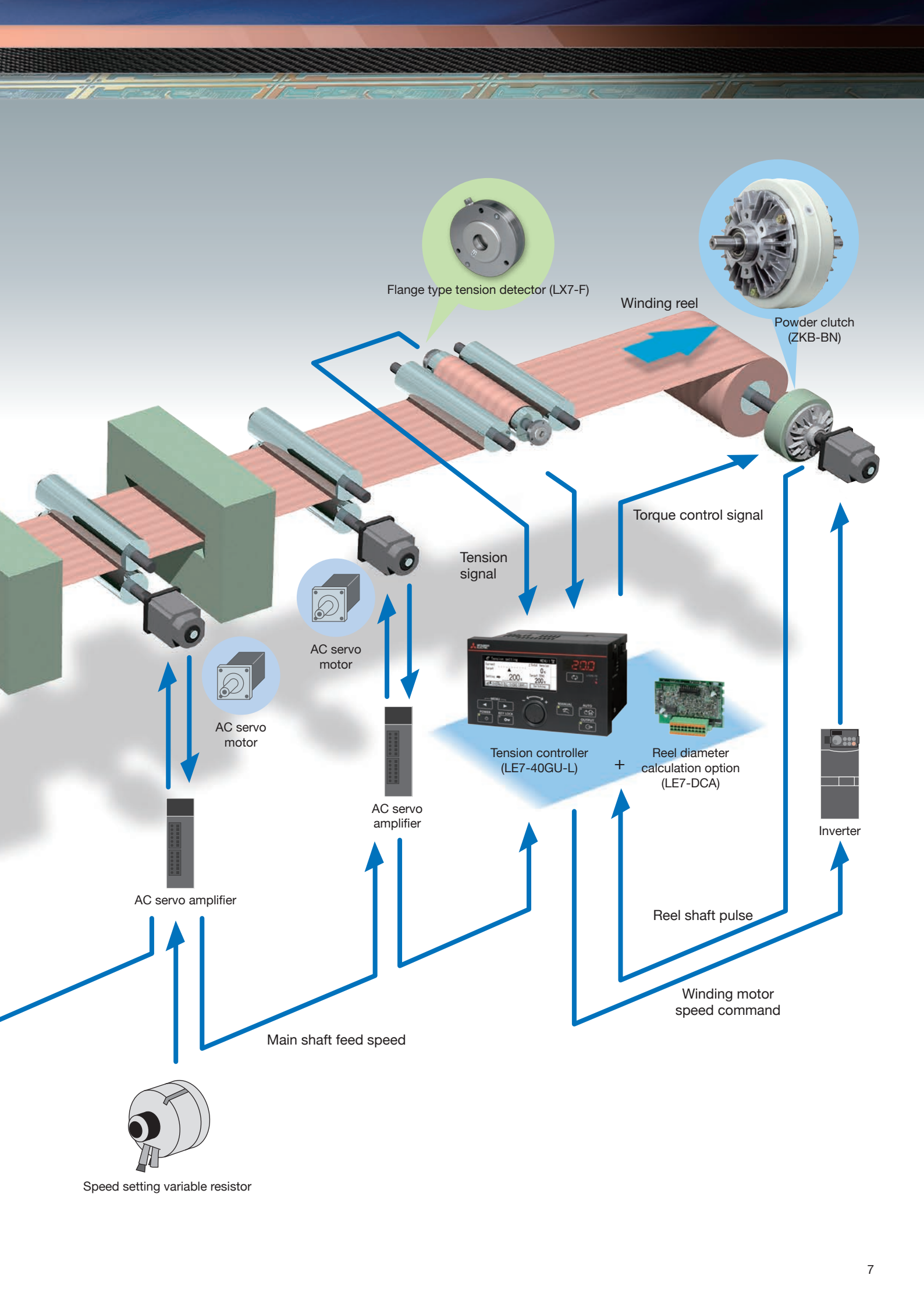
Flange type tension detector (LX7-F)
Winding reel
Powder clutch
(ZKB-BN)
Torque control signal
Tension
signal
AC servo
motor
AC servo
motor
Tension controller
(LE7-40GU-L)
+
Reel diameter
calculation option
(LE7-DCA)
Inverter
AC servo
amplifier
AC servo amplifier
Reel shaft pulse
Winding motor
speed command
Main shaft feed speed
Speed setting variable resistor

Powder Clutch/Brake

The powder clutches and brakes of Mitsubishi Electric, which use magnetic iron powder for transmitting torque, offer advantages such as a smooth fluid clutch and high efficiency upon coupling of the friction plate clutches.
These products are now indispensable for tension control as actuators for winding and unwinding long materials such as paper, thread, electric wire, various sheets, and tape. They are also suitable for buffer startup, power absorption, and overload safety devices (torque limiter).

1. **Easy control over a wide range**
   Transmission torque changes continuously in response to changes in the exciting current, and so can be easily controlled over a wide range.
2. **Continuous slip operation**
   The powder enables continuous slip on the working surface as well as stable transmission torque regardless of the slip rotation speed.
3. **Stable torque**
   Due to the shape of the operating surface and powder leakage prevention structure, the distribution of powder can be kept uniform and stable torque can be reproduced even if the current is repeatedly turned on and off.
4. **Large heat capacity**
   The products using powder have excellent heat resistance and an ideal cooling structure, and so can be used even in harsh continuous slip operation.
5. **Smooth connection and drive**
   With almost equal coefficients of static and dynamic friction, load-based acceleration/deceleration can be obtained without shock at the time of complete connection.

Powder clutch

Powder brake

Explanation of icons

: Protruding shaft type

: Through shaft type

Powder clutch	Product lineup (rated torque: N·m)
ZKG-AN Natural cooling type	0.5 1 2 5 10
ZKB-AN Natural cooling type	0.6 3 6
ZKB-BN Natural cooling type Forced air cooling type	12 25 50 100 200 400
ZKB-B-909 Natural cooling type	12 50 100 200
ZA-A1 Natural cooling type	6 12 25 50 100 200

Powder brake	Product lineup (rated torque: N·m)
ZKG-YN Natural cooling type	0.5 1 2 5
ZKB-YN Natural cooling type	0.6 3 6
ZKB-XN Natural cooling type Forced air cooling type	12 25 50 100 200 400
ZKB-HBN Thermo block cooling	25 50 100 200 400
ZKB-WN Water cooling type	25 50 100 200 400
ZA-Y Natural cooling type	6 12 25 50 100 200 400
ZX-YN Natural cooling type	3 6 12

Tension Controller Lineup

LE7-40GU-L tension controller

Feedback control	Open-loop control (LE7-DCA used)	Feed forward/feedback combined control (combined with LE7-DCA)
1-shaft control	Built-in clutch amplifier	RS-485 communication
Ethernet	USB interface	CC-Link V2 (LE7-CCL used)

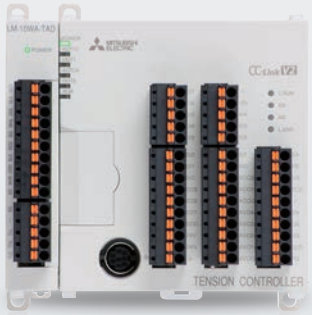

LE-10WTA-CCL/LD-10WTB-CCL tension controller

Feedback control (LE-10WTA-CCL)	Open-loop control (LD-10WTB-CCL)	Feed forward/feedback combined control*
Up to 2-shaft control	CC-Link V2	RS-422 communication (GOT connection)
RS-485 communication (LM-10WA-485 used)	USB interface (LM-10WA-USB used)	

Feedback Type Tension Controller

This type of controller directly measures the material tension using the tension detector, and performs feedback control so that the tension during unwinding and winding matches the set value. This method can accurately control tension with regard to the set value.

LE7-40GU-L tension controller

Built-in clutch amplifier.
Supports various FA networks, including CC-Link.
[Rated output: 24 V DC, 2.7 A]

LE-10WTA-CCL tension controller

Enables tension control for up to 2 shafts when the optional adapter is added.
Incorporates the CC-Link V2 remote device station function.

LE-30CTN tension controller

Clutch amplifier built in.
[Rated output: 24 V DC, 3 A]

LE-40MTA(-E)/LE-40MTB(-E) tension controller

Clutch amplifier built in.
[Rated output: 24 V DC, 4 A]

Open-Loop Type Tension Controller

This type of controller detects the reel diameter using sensors and controls the unwinding and winding torque.
This method can stably control tension without being sensitive to sudden disturbances.

LE7-40GU-L+LE7-DCA reel diameter calculation option

Supports open loop control with LE7-40GU-L+ LE7-DCA.

LD-10WTB-CCL tension controller

Enables tension control for up to 2 shafts when the optional adapter is added. Incorporates the CC-Link V2 remote device station function.

LD-30FTA tension controller

Open loop type tension controller using the integrated thickness monitoring method (based on the initial diameter and material thickness).
[Rated output: 24 V DC, 3 A]

LD-05TL tension controller

This type of tension controller performs unwinding and winding with the reel diameter signal from the touch lever (potentiometer) as input.
[Rated output: 24 V DC, 0.5 A]

*: LE-10WTA-CCL + LD-10WTB-DCA
LD-10WTB-CCL + LE-10WTA-TAD

Mitsubishi Electric offers various types of equipment including tension controllers, tension detectors and tension meters required for tension control to allow you to choose the ideal products for your application and control needs.

LM-10WA-CCL tension meter

Up to 4-shaft supported | RS-422 communication (GOT connection) | CC-Link V2 | RS-485 communication (LM-10WA-485 used) | USB interface (LM-10WA-USB used)

LX7-F tension detector

Outside wall mounting | Inside wall mounting | Rated load 50 to 500 N | Differential transformer type sensor

LD-10PAU-A/LD-10PAU-B power amplifier

1-shaft control | RS-422 communication (GOT connection) | RS-485 communication (LD-10PAU-B)

Tension Meter

Tension meters display the material tension detected by the tension detector, and output the corresponding signal to external equipment. Some types of tension meters can handle multiple shafts or can perform digital display suitable for tension monitoring.

LM-10WA-CCL tension meter

Tension meter displays the tension, and outputs a signal in proportion to the tension.
Incorporates the CC-Link V2 remote device station function.

LM-10PD tension meter

Tension meter displays the tension, and outputs a signal in proportion to the tension.

LM-10TA tension amplifier

Compact tension amplifier outputs a voltage signal (0 to 5 V DC or 10 V DC) in proportion to the input signal sent from the tension detector.

Clutch Amplifier

These devices change the current and voltage of powder clutches and brakes in accordance with variable resistors provided on the panel, external signals and external variable resistors.

LD-10PAU-A/LD-10PAU-B power amplifier

Constant-current control type clutch amplifier controls the exciting current of 24 V DC type compact clutches and brakes.
[Rated output: 24 V DC, 1.0 A]
[RS-485 communication function built in (LD-10PAU-B)]

LE-50PAU power amplifier

Constant-current constant-voltage control type clutch amplifier controls the exciting current of clutches and brakes. [Rated output: 24 V DC, 4 A]

LD-40PSU power supply unit

Constant-voltage control type power supply unit adjusts the output (0 to 24 V DC) in accordance with the setting of the variable resistor provided on the panel surface or the input signal (0 to 5 V DC) for control sent from the outside.
[Rated output: 24 V DC, 3.8 A]

Tension Detector

The tension applied on the material translates to a load, and then this load value is accurately converted to an electrical signal.

LX-TD/LX-TD-928 tension detector

Stationary tension detector used in combination with the feedback type tension controller or tension meter to obtain the tension signal. (Model 928 for explosion-proof) [Rated load: 50 to 2000 N]

LX7-F tension detector

Flange type tension detector used in combination with the feedback type tension controller or tension meter to obtain the tension signal. [Rated load: 50 to 500 N]

Comparison of Various Clutches and Brakes

Comparison

Powder clutch/brake and friction plate type clutch/brake	Powder clutch/brake	Friction plate type clutch/brake
External dimensions	Large overall	Small
Torque control	Easy	Difficult
Slip on friction surfaces	Continuous slip possible	Not practical in principle
Engaging work	Large	Small
Mounting condition	Restricted, for example, oblique and vertical mounting not allowed	Practically no restriction
Price	Expensive	Inexpensive
Application	Especially suitable for buffer startup, tension control, and torque limiter	Suitable for engaging and braking in general

Comparison based on power feeding method to electromagnetic coil	Static coil clutch/brake	Rotating coil clutch/brake
External dimensions	Rather large, especially in axial direction	Small
Construction	Somewhat complicated due to ball bearings and others attached	Simple
Power feeding condition	No concerns	Wet type is vulnerable to power feeding failure
Rotation speed	No restrictions (restricted by other factors)	Not suitable for high-speed application
Assembly into clutch box	Easy	Somewhat complicated due to installation of brush
Maintenance	Practically none required	Brush replacement required

Usage and Control Methods

Winding, unwinding, and intermediate control

■Unwinding control

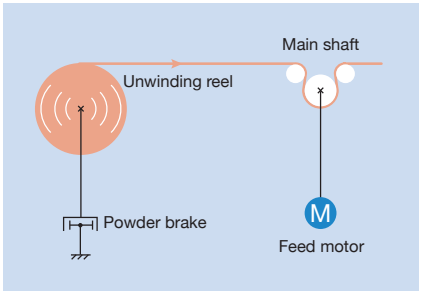

- The figure above shows the outline of an unwinding control system that uses a powder brake.
- Since unwinding tension equals braking torque divided by unwinding radius, tension can be kept constant by reducing the braking torque according to the decrease in reel diameter.
- A speed increaser and speed reducer such as gears are installed as necessary between the reel shaft and the powder brake.

■Winding control

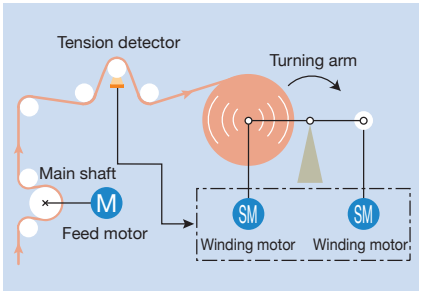

- The figure above shows the outline of a 2-shaft switchover winding control system that has a servo motor.
- This is an example of a feedback controlled tension control system based on the signals from the tension detector and in which pre-drive control for the auto feeder is also performed.

■Intermediate shaft control

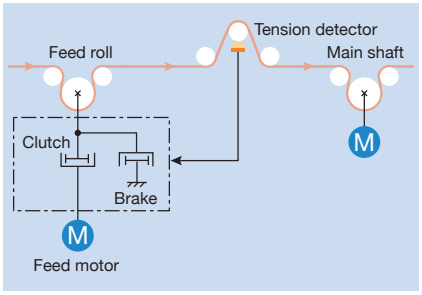

- The figure above shows the outline of an in-feed control system that uses a powder clutch/brake. In-feed control systems include a feed motor before the main shaft motor, while outfeed systems include a feed motor after the main shaft motor.

Usage and Control Methods

Types of tension control

■Manual control

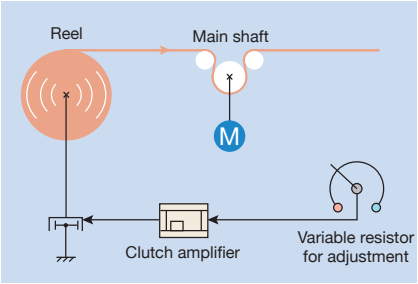

- Manual control of winding or unwinding tension and of countershaft tension in a system that uses a clutch/brake and only has small variations in reel diameters.
- Performs sudden control during stop and remote operation of the variable resistor.

■Open loop control

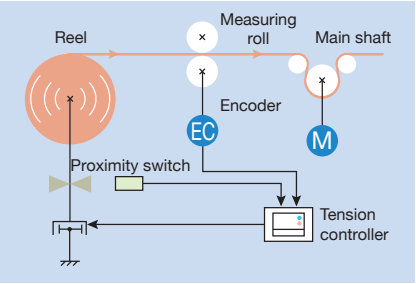

- Unwinding braking torque and winding torque shall be controlled based on the reel diameter measured on a non-contact basis.
- There are five types of reel diameter-detection methods. Those with fewer sensors require more settings to be made.

  (1) Speed/thickness setting method: No sensor

  (2) Integrated thickness method: Single sensor (reel shaft)

  (3) Ratio calculation method: Double sensor

  (4) Touch lever method: Potentiometer

  (5) Ultrasonic sensor method: Ultrasonic sensor

  The figure above shows a ratio calculation method using the reel shaft pulse and measuring pulse.

■Feedback control

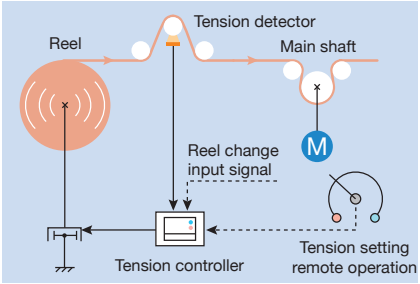

- Closed loop tension control using a tension detector is called the feedback method.
- When performing externally sequenced multiple-shaft switchover control, new reel preset control is performed based on the reel change input signal.
- However, pre-drive control shall be performed externally.

Tension control by torque control and by speed control

■Torque tension controller

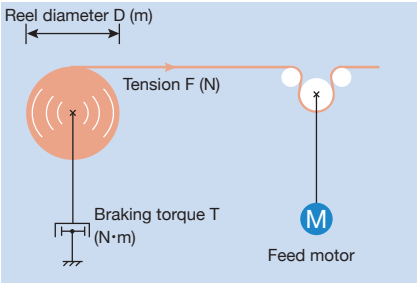

- As is shown in the figure above, when the braking torque of the powder brake for the unwinding reel is T (N·m), the tension (F) of the unwound material equals 2T/D (N).
- Tension is kept constant by decreasing the braking torque according to the decrease in the reel diameter D (m).
- "Tension control by torque control" refers to the type of tension control system, such as the one shown in the figure above, in which braking torque or winding torque is applied to the winding or unwinding reel.

Torque tension control requires no dancer rolls and can accommodate simple manual or open-loop tension controllers. In this system, a powder clutch/brake or servo motor (torque mode) can be used as an actuator.

■Speed tension controller

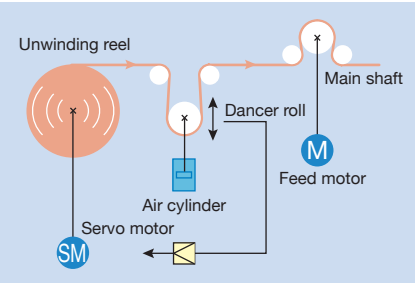

- "Tension control by speed control" or "dancer-controlled tension control" refers to the type of system, such as the one shown in the figure above, in which the rotation speed of the unwinding reel or feed reel is controlled to keep the dancer roll in the target position. The position of the dancer roll is detected by a potentiometer.
- Since the dancer roll moves down when the in-feed speed is too fast, and moves up when it is too slow, this system requires fast response and stable control operation. The absolute precision of tension, however, depends on the precision of the air pressure. (Please note that Mitsubishi Electric does not offer products for use in the above type of system.)

This system is suitable for lower tension control in a system with small operation tension in proportion to the inertia compensated tension at acceleration or deceleration or for a system that is designed to handle materials with low elasticity. A servo motor is used as the actuator in this type of system.

Various Manufacturing Processes Require

Coater/Laminator

Applies the coating agent on the film, laminates it, and winds it.

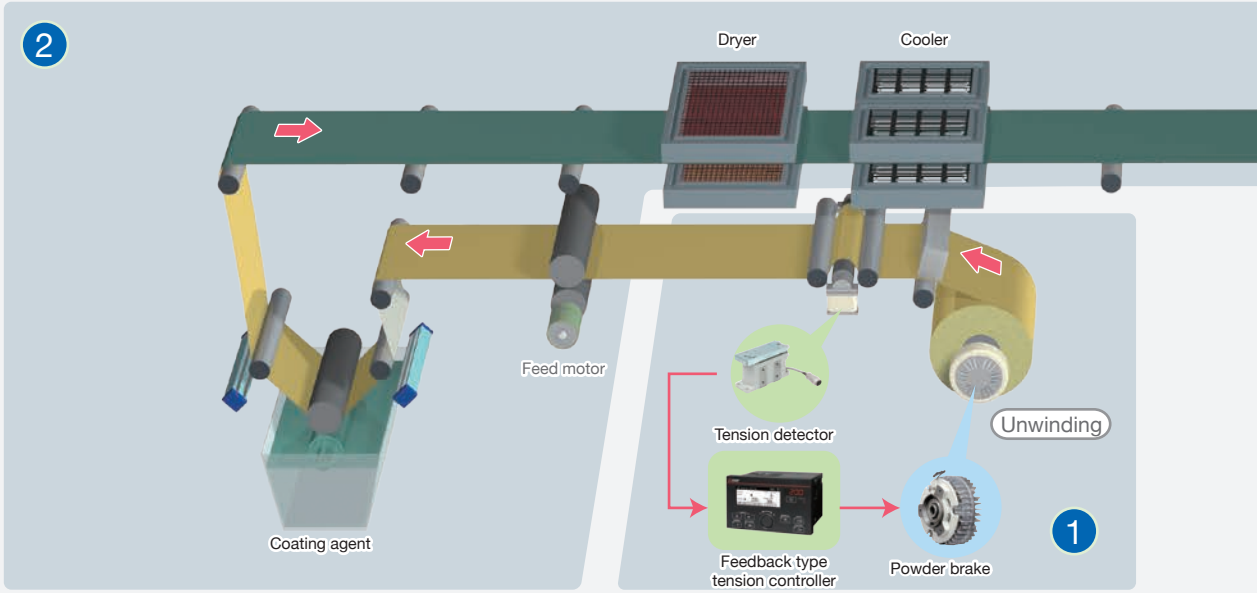

Coater

Highly-advanced control technology is required to prevent uneven application of the coating agent on the film. When a coated film is dried in a later process, it may elongate or shrink due to fluctuations in temperature. Tension control is required during winding and unwinding of film.

① Unwinding a long material

Tension control is applied to prevent uneven application of the coating material.
The feedback type tension controller ensures highly accurate tension control.

② Coating area

Because floppy motion is a concern if the distance from coating to winding is long, the tension is controlled also in the mid point.

Slitter

Makes a slit of the specified width in a material such as film, paper and metal, and winds the material at the same time.

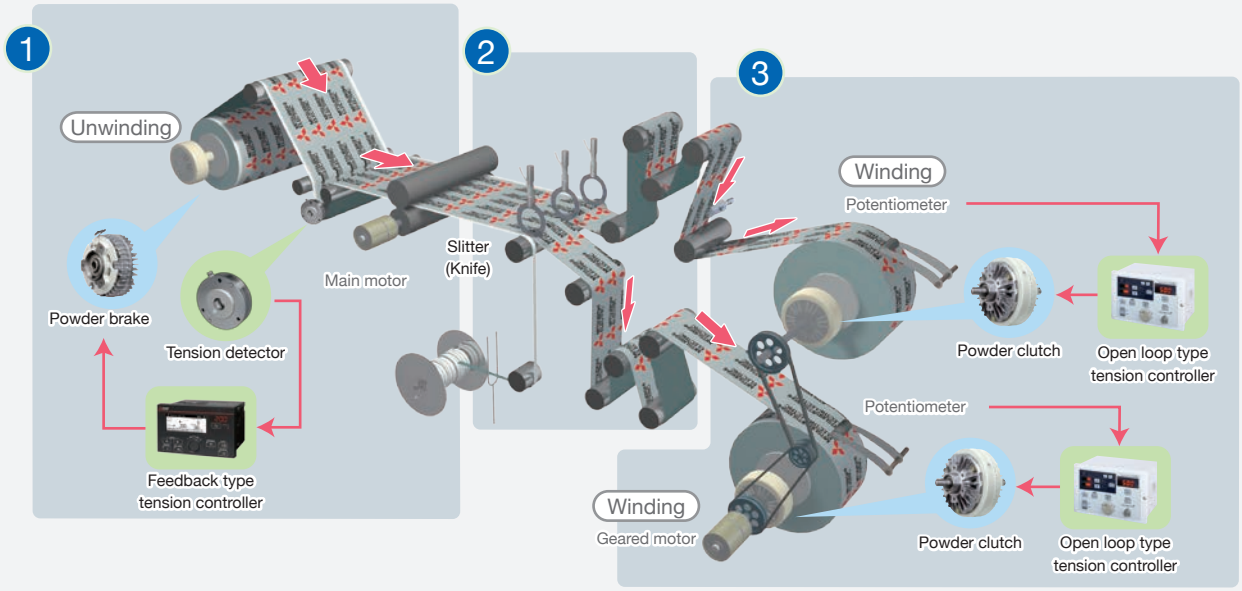

The basic structure consists of winding, unwinding, and knifing, and a tension controller is provided as the winding and unwinding processes greatly affect the product quality.

① Unwinding a long material

The tension detector measures the tension which is then controlled to be constant by the feedback type tension controller, which changes the feeding voltage to the powder brake according to the measured tension.

② Slit part

The slitter cuts the sheet to the specified width using the knife laid out in the line center. The optimal tension is maintained before and after knifing to ensure clean cutting.

③ Winding of long material

The combined operation of potentiometer and open loop type tension controller securely controls the tension. The open loop control is also effective to control the tension when there is no space to mount a tension detector.

Tension Control

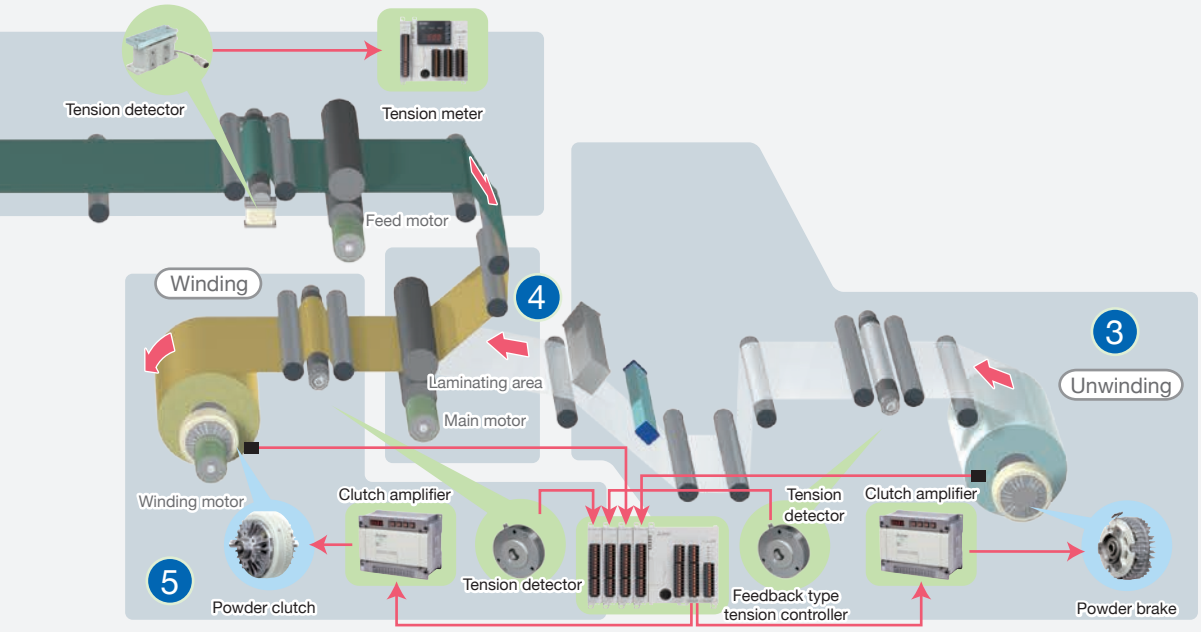

Laminator

The tension in the laminating area is kept constant to prevent warps and wrinkles, and to improve the bonding quality in the laminating area. Laminators are classified into several types by binding method such as dry laminator, wet laminator, hot-melt laminator and extrusion laminator.

③ Unwinding a long material

Tension control is applied to prevent uneven application of the coating material.
The feedback type tension controller ensures highly accurate tension control.

④ Laminating area

2 materials are caught together and bonded to each other. At the same time, the main motor determines the production line speed.

⑤ Winding part

When the winding ratio between the maximum diameter and the minimum diameter is large, taper tension control can be used as needed to improve the winding quality. The tension controller has a taper tension function, and the taper ratio can be changed easily.

Small, lightweight, all-in-one type tension controller

CC-Link IE Field Basic

CC-Link

Built-in clutch amplifier

LE7-40GU-L Tension Controller

Compatible with various control methods

Feedback Control

While the material tension is directly monitored with the tension detector, feedback control is performed so as to match the target tension.

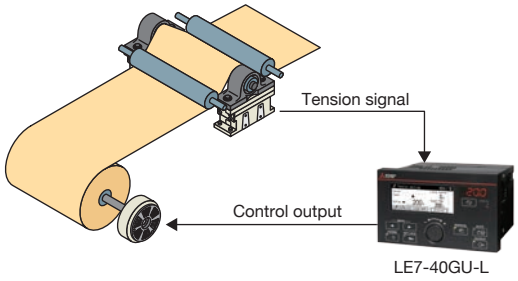

High Control Responsiveness

Thanks to high control responsiveness, the tension is stabilized even during acceleration/deceleration such as when starting and stopping the material line. Various functions are standard equipment so that the product can be used more reliably for diverse applications.

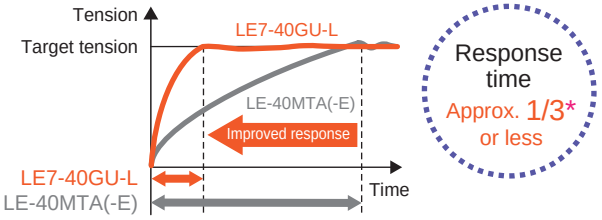

*: This is the result of measuring the response time from tension = 0 to full scale tension with the tension controller initial setting value. (Compared to LE-40MTA(-E))

Open-Loop Control

This method keeps the tension constant by controlling the torque according to changes in the reel diameter which are calculated using the signal from the sensor.

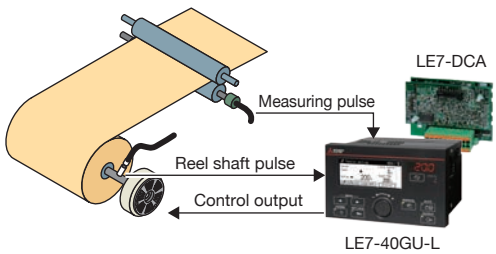

Feed Forward/Feedback Combined Control

This method combines highly stable open-loop control and high-precision feedback control to implement more advanced tension control.

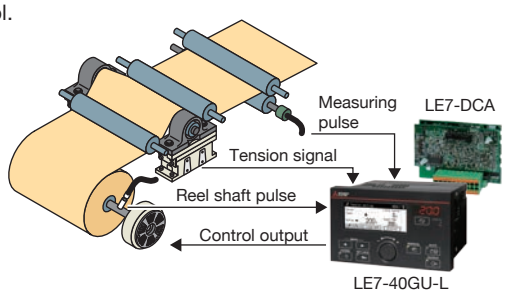

Other features include:

■ Constant slip control ■ Stall/new reel preset automatic calculation ■ Automatic calculation of inertia compensation ■ Broken liner taper tension control ■ Reel diameter/length measurement timing detection ■ Peripheral speed synchronization signal ■ Pre-drive output etc.

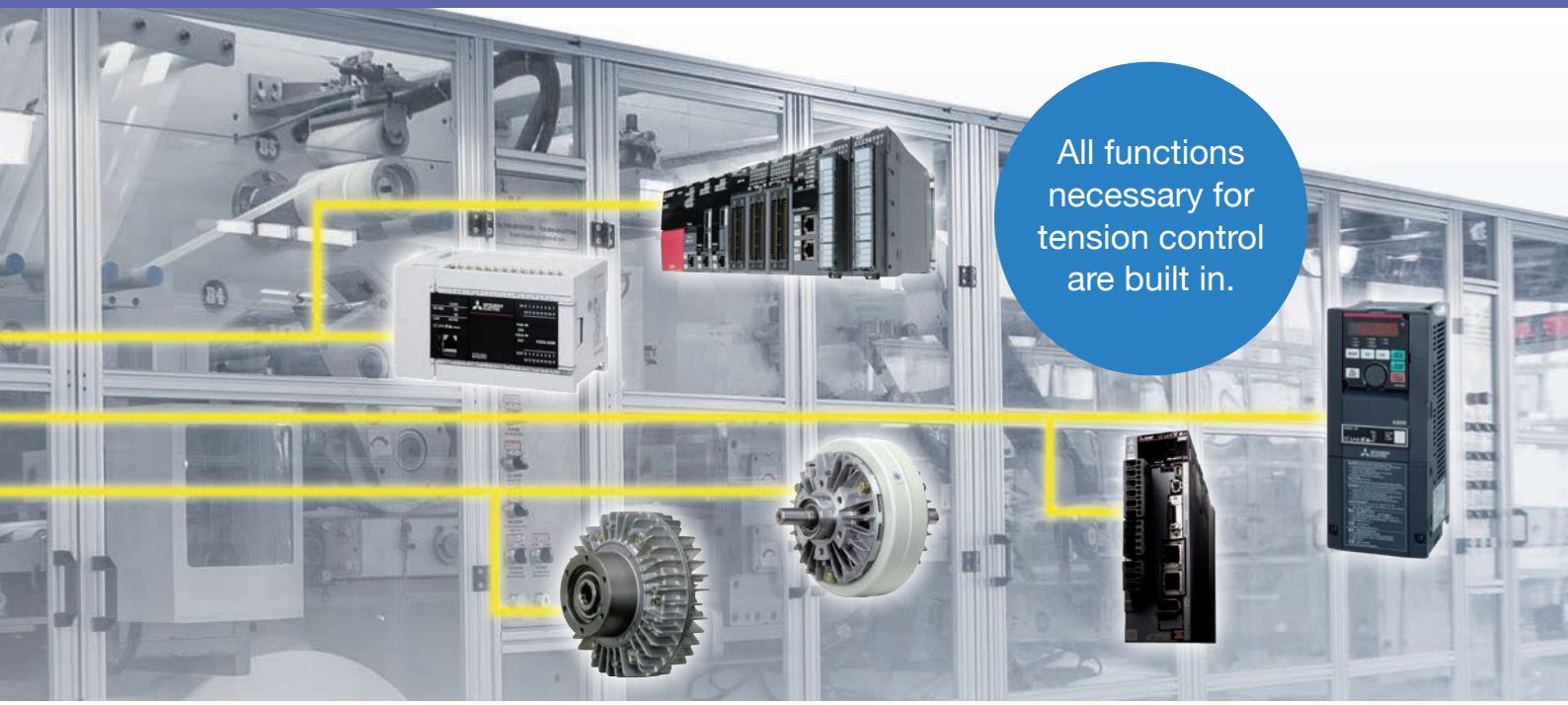

This tension controller is easy to handle with an easy-to-read display and easy-to-understand panel design in addition to sophisticated control functions.
Also equipped with a clutch amplifier for a powder clutch/brake, you can easily introduce high-performance tension control.

Easy to use

A 3.8-inch high-resolution TFT liquid crystal touch panel monitor enables intuitive operation. The controller supports Japanese, English, and Chinese.

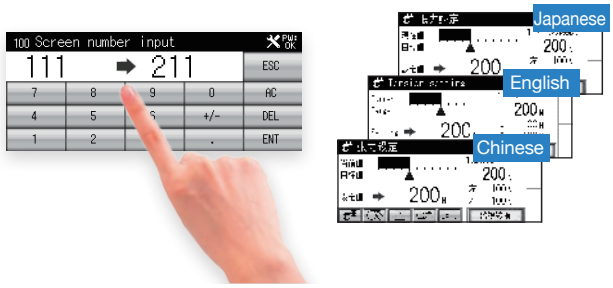

Compact housing

The product is significantly smaller and lighter than the standard product*. With a clutch amplifier also built into the compact housing, the powder clutch/brake can be controlled directly.

- Area occupied on the panel — Approx. 53% reduction
- Product cubic volume — Approx. 63% reduction
- Product mass — Approx. 71% reduction

*: LE-40MTB(-E), LE-40MTA(-E)

Supports various communications

The controller includes Ethernet and RS-485 communication functions as standard and can connect to existing FA networks. It can also handle tension control in conjunction with network-compatible drive equipment such as inverters and servo amplifiers.

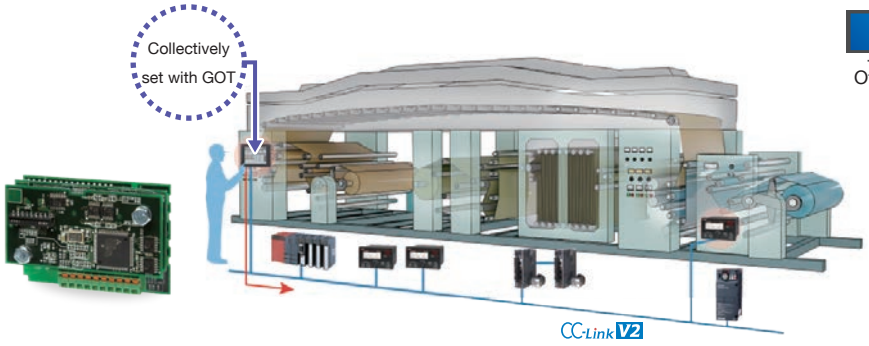

Connection to CC-Link network with LE7-CCL type network option

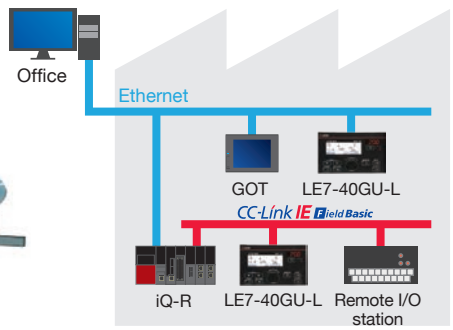

Ethernet saves man-hours and enables long-distance transmission

LE-10WTA-CCL
LD-10WTB-CCL
Tension Controller

For diverse tension control

High-functional films, high-functional fibers and printed electronics ... The following models expand the possibilities of diverse tension control.
By connecting the tension detector input adapter and reel diameter calculation adapter to the main unit, various methods of tension control are possible.

Tension control 2 shafts maximum

Capable of being installed with DIN rails as an in-panel equipment

LE-10WTA-CCL tension controller

Tension detector input adapter + Main unit

LD-10WTB-CCL tension controller

Reel diameter calculation adapter + Main unit

LM-10WA-TAD

Tension detector input adapter

LD-10WTB-DCA

Reel diameter calculation adapter

"Network adaptability" allows incorporation into the line.

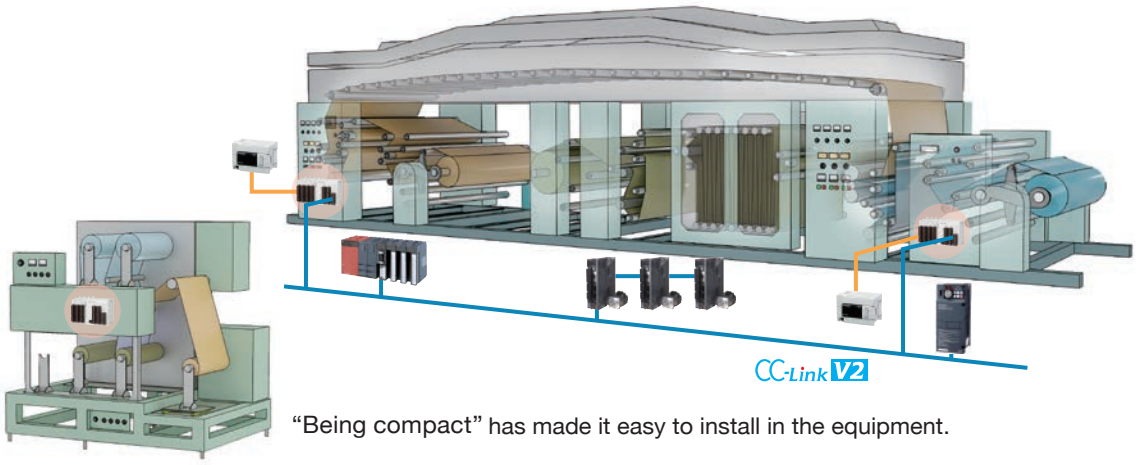

"Being compact" has made it easy to install in the equipment.

Highly advanced tension control

Enable tension control for up to 2 shafts

Diversified communication functions

Improved support for motor control

Enable manipulation and display of settings from the panel using the graphic operation terminal.

GT2104-P
Display main body Connection cable

[System Configuration]

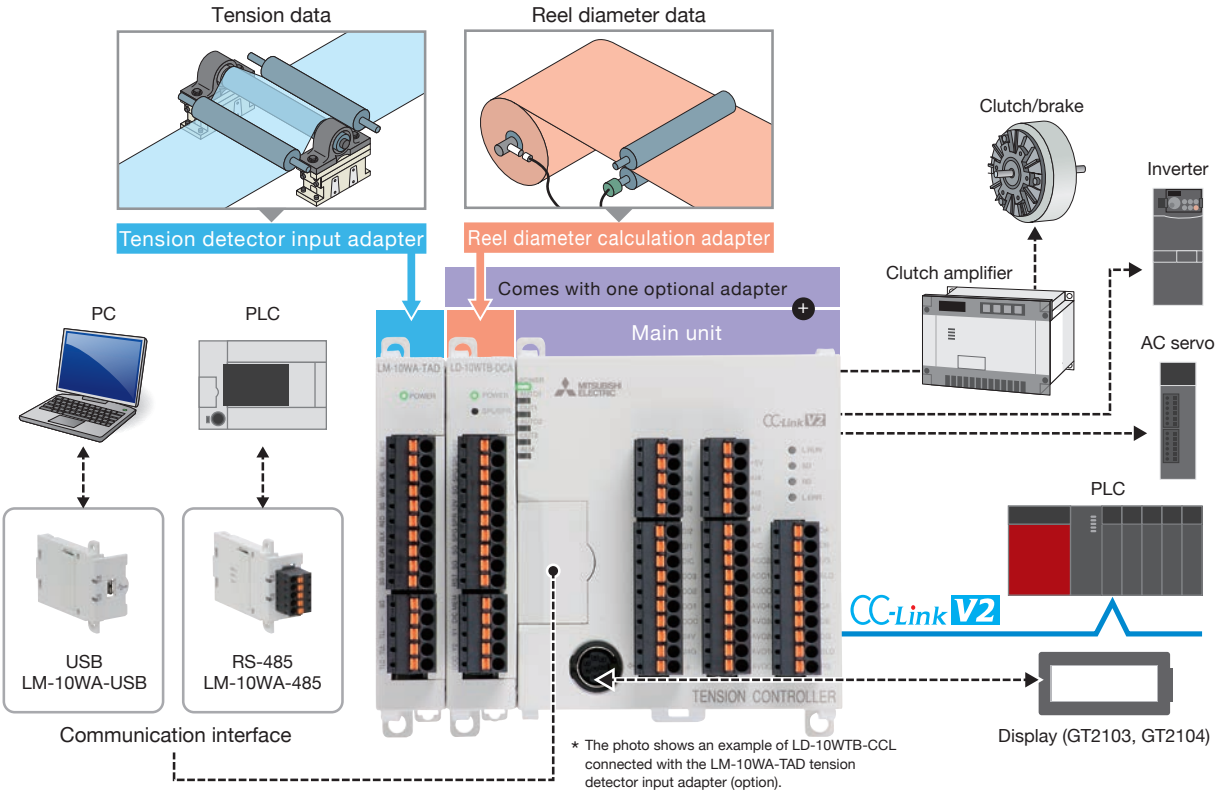

The LE-10WTA-CCL is supplied with one tension detector input adapter as an accessory.
The LD-10WTB-CCL is supplied with one reel diameter calculation adapter as an accessory.

[Control Examples]

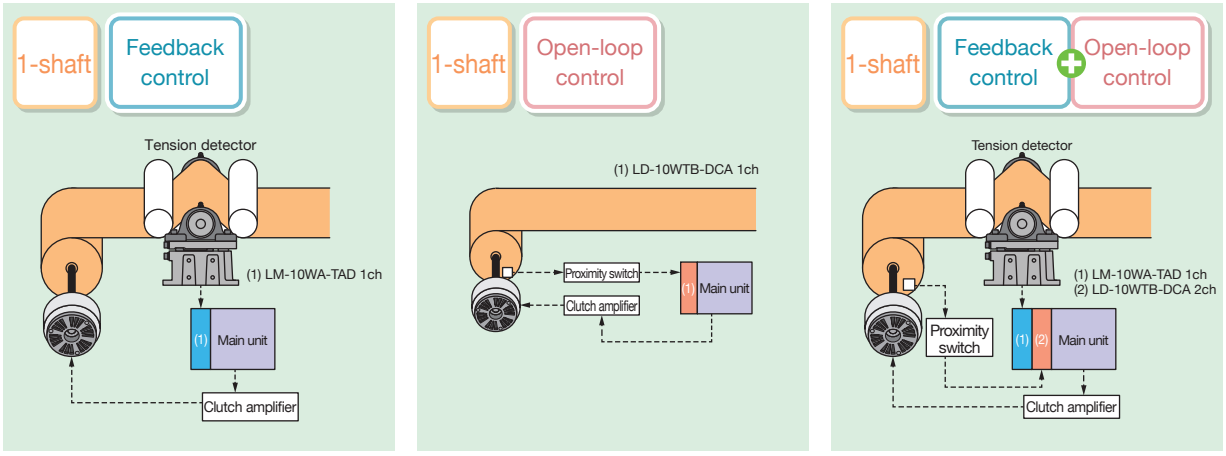

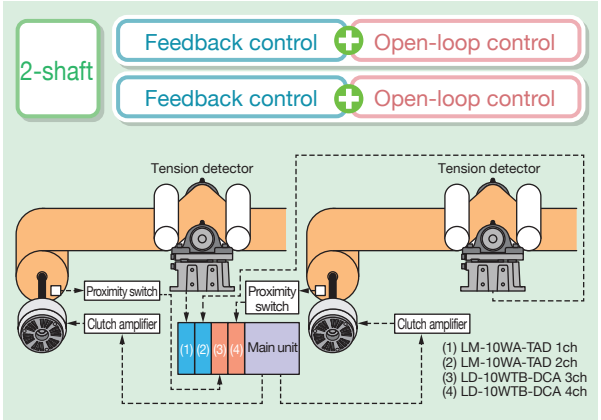

LX7-F Flange-Type Tension Detector

This flange type tension detector is electrically compatible with a stationary tension detector (LX-TD). It can be attached directly to the wall of equipment, minimizing the width of the equipment. This detector, with a smaller footprint than a stationary tension detector, can be used for more complicated material path line devices and for tension control with a high degree of freedom.

Connection to tension controller/ tension meter

Easily connected to the tension controllers and tension meters manufactured by Mitsubishi Electric with the included cable.

Secured electrical compatibility with LX-TD tension detector

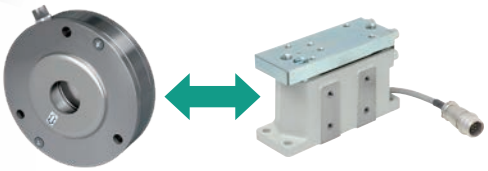

Since the compatibility with LX-TD tension detectors minimizes necessary changes in connections and settings of tension controllers and tension meters, you can introduce these products safely when updating your existing equipment.

Note: The color scheme of the dedicated cable is different. Refer to the manuals for details.

High-accuracy sensor built in

The “differential transformer sensor”, proven with the standalone type (LX-TD Series), is mounted in the body. This sensor is capable of highly accurate load measurements with its high output voltage and resistance to electrical noise. In addition, the sensor is resistant to impact and has outstanding durability.

Thin disc type

The thin body allows the equipment width to be minimized. A high degree of layout freedom is achieved as the path line can be changed easily and reels can be set near each other.

Nickel plated iron body

By using iron for the body, the thermal expansion rate is the same as that of other machine frames, thus suppressing the effects of ambient temperature. The surface is treated with electroless nickel plating to increase the corrosion resistance.

Clutch & Brake

■Powder Clutch/Brake

Table of Contents

ELECTROMAGNETIC CLUTCH/BRAKE

LINE-UP A-3

Powder Clutch/Brake

- Features A-4
- Basic structure and operation A-4
- Precautions on mounting A-5
- Performance A-6
- Structure diagram (typical example) A-8
- ZKG-AN micro powder clutch A-10
- ZKB-AN powder clutch A-12
- ZKB-BN powder clutch A-14
- ZKB-B-909 powder clutch A-18
- ZA-A1 powder clutch A-20
- ZKG-YN micro powder brake A-22
- ZKB-YN powder brake A-24
- ZKB-XN powder brake A-26
- ZKB-HBN powder brake A-30
- ZKB-WN powder brake A-32
- ZA-Y powder brake A-36
- ZX-YN powder brake A-40
- Selection A-42
- Specification contact sheet A-48
- Usage precautions A-50

LINE-UP

Explanation of icons : Protruding shaft type : Through shaft type

	Shaft	Cooling	Clutch	Brake	Torque (N·m)	Features	Figure page
Powder type	Protruding shaft	Natural cooling	ZKG-AN	ZKG-YN	ZKG-AN 0.5 to 10 ZKG-YN 0.5 to 5	• Compact micro series • Small moment of inertia of rotating part • Available from 5 r/min	A-10 to A-11 A-22 to A-23
			ZKB-AN	ZKB-YN	0.6 to 6	• Available from 5 r/min	A-12 to A-13 A-24 to A-25
		Combination of natural cooling and forced air cooling	ZKB-BN	ZKB-XN	12 to 400	• Available from 5 r/min • A large heat capacity can be obtained by blowing air into the air gap.	A-14 to A-17 A-26 to A-29
		Thermo-block cooling	-	ZKB-HBN	25 to 400	• Heat capacity increased by using a thermoblock for a driven member and by including an axial flow fan • Available from 5 r/min	A-30 to A-31
		Water cooling	-	ZKB-WN 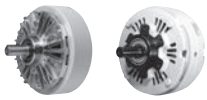	25 to 400	• Heat capacity increased using water cooling by providing a water channel in the driven member • Available from 5 r/min	A-32 to A-35
		Natural cooling	ZKB-B-909	-	12 to 200	• Explosion-proof structure based on ZKB-B • Available from 15 r/min	A-18 to A-19
	Through-shaft	Natural cooling	-	ZX-YN	3 to 12	• Ultra-thin type • Available from 5 r/min	A-40 to A-41
			ZA-A1	ZA-Y	ZA-A1 6 to 200 ZA-Y 6 to 400	• Heat capacity increased by rotating the periphery to improve heat dissipation • Available from 15 r/min	A-20 to A-21 A-36 to A-39

Powder Clutch/Brake

■ Features

The powder clutches and brakes of Mitsubishi Electric, which use magnetic iron powder for transmitting torque, offer advantages such as a smooth fluid clutch and high efficiency upon coupling of the friction plate clutches.
Mitsubishi Electric is a pioneer of powder clutches and brakes in Japan and, with its extensive know-how, track record and achievements, has been fulfilling customers' needs.
Taking advantage of many features, these products are now indispensable for tension control as an actuator for winding and unwinding long objects such as paper, thread, electric wire, various sheets, and tape. They are also suitable for buffer startup, power absorption, and overload safety devices (torque limiter).

1. Easy control over a wide range

Transmission torque changes continuously in response to changes in the exciting current, so the transmission torque can be easily controlled over a wide range.

2. Continuous slip operation

The powder enables continuous slip on the working surface as well as stable transmission torque regardless of the slip rotation speed.
However, the powder must be used within the permissible continuous heat dissipation.

3. Stable torque

Due to the shape of the operating surface and powder leakage prevention structure, the powder keeps functioning normally and therefore stable torque can be reproduced even if the current is repeatedly turned on and off.

4. Large heat capacity

The products using powder have excellent heat resistance and an ideal cooling structure, and so can be used even in harsh continuous slip operation.

5. Smooth connection and drive

With almost equal coefficients of static and dynamic friction, load-based acceleration/deceleration can be obtained without shock at the time of complete connection.

■ Basic structure and operation

The basic structure of the powder clutch is shown in the figure at right. The drive member (input side) and driven member (output side) are placed on a concentric cylinder separated by a powder gap, and both members are supported by bearings so that they can freely rotate.
Powder with high magnetic permeability (magnetic iron powder) is put in the powder gap, and the exciting coil is arranged on the outer circumference so that the magnetic flux flows to it.
While the drive member is rotating without being excited, the powder is pressed against the working surface of the drive member by centrifugal force, leaving the drive member disconnected from the driven member.
When the coil is excited, powder is connected in a chain along the generated magnetic flux. At this time, torque is transmitted by the coupling force between powders and the frictional force between the powder and the working surface.
Thus, the powder clutch can also be called a friction clutch using powder as a medium.
In addition, the product in which the driven member (output side) is fixed becomes a powder brake.

Cross section of ZKB-XN powder brake

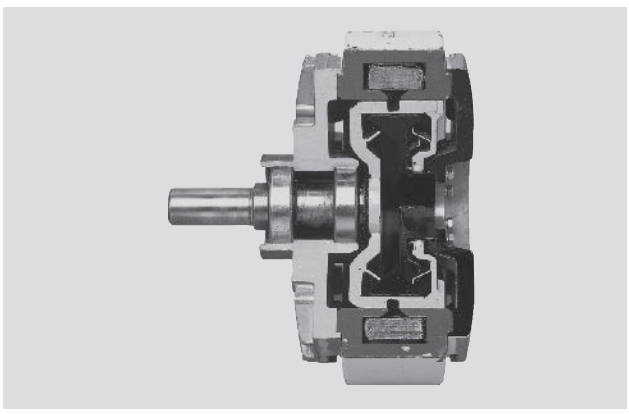

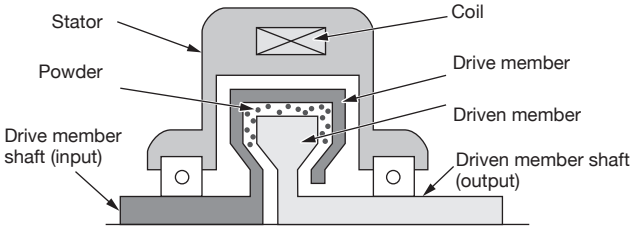

When shut down

When current is not passed through the exciting coil, the clutch is released and torque is not transmitted. At this time, powder is pressed against the outer periphery of the powder gap by centrifugal force.

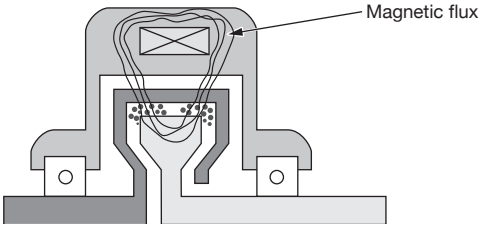

When connected

When the coil is excited, the magnetic flux connects the powder in a chain inside the powder gap and transmits the torque.

■ Precautions on mounting

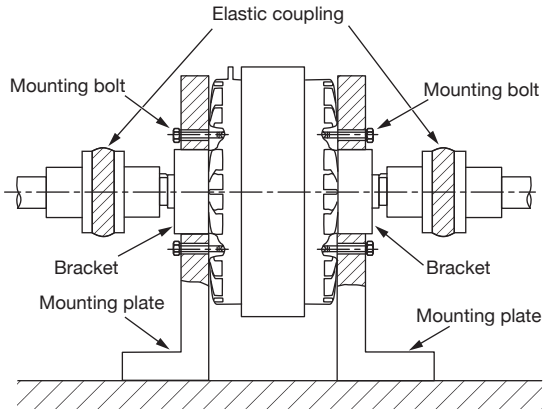

Shaft vertical mounting inhibited

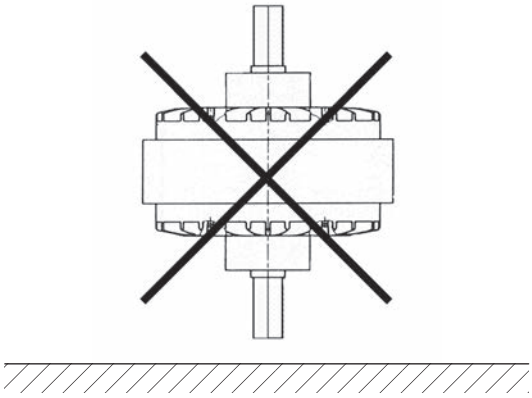

(1) Powder clutch/brake cannot be used while mounted with the shaft perpendicular to the mount (uniform distribution of powder is not obtained).
(2) Do not use with the input and output reversed.
It is not recommended due to durability and torque stability.
(3) Be sure to use an elastic coupling to connect to the load shaft.
When mounting a pulley or the like, observe the allowable shaft load range.
(4) Key dimensions are compliant with the old JIS (except for ZX series).
For details, refer to the external dimensions table.
(5) Be careful of the tightening torque and overlapping allowance of the mounting bolt.
• For the tightening torque, refer to the instruction manual.
• Secure the following values for the overlapping allowance of the mounting bolt.
(D: Nominal diameter of bolt)
When the bracket is made of steel: 0.8 to 1.2 D
When the bracket is made of cast iron or aluminum: 1.5 to 2.0 D
(6) Coil has no positive or negative polarity.
(7) Be sure to perform break-in operation before starting regular operation (see the usage precautions for details).
(8) For the ZKG series, note the heat dissipation area of the mounting plate.
(9) Since the outer periphery of the ZA series rotates, be sure to cover the whole body with a wire mesh or the like with good ventilation.
(10) For details, refer to the installation example of each model.

Performance

1. Exciting current vs. torque characteristics

Fig. 1 shows an example of the exciting current vs. torque characteristics of a powder clutch.
As is clear from this figure, the torque is proportional to the exciting current over a wide range, indicating good controllability of torque. Although there are some differences depending on the model, the torque is almost proportional to the current in the range of 5 to 100% of the rated torque.

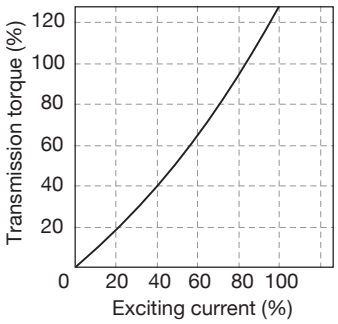

Fig. 1 Exciting current vs. torque characteristics (typical example)

2. Slip rotation speed vs. torque characteristics

Fig. 2 shows the slip rotation speed vs. torque characteristics when the current is set as a parameter. If the exciting current is kept constant, torque can be kept constant irrespective of the slip rotation speed (the difference in rotational speed between the drive member and driven member). This is because powder (magnetic iron powder), which is also called semisolid, is used as a medium for power transmission. In other words, this characteristic means that there is no difference between the static friction torque and dynamic friction torque, indicating the ease of torque control.
This characteristic not only allows continuous slip and increases the heat capacity but also widens the scope of application of powder clutches and brakes such as for tension control and buffer startup.
In the case of tension control, for example, the slip rotation speed of the clutch/brake changes according to the reel diameter, but this characteristic enables simple and accurate control merely by controlling the exciting current regardless of the slip rotation speed.

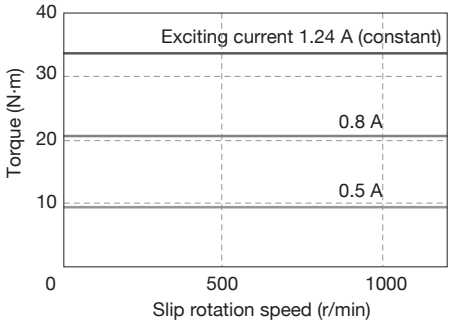

Fig. 2 Slip rotation speed vs. torque characteristics

3. Operation characteristics

This section explains the operation characteristics required when you want to control the startup time or when considering high-frequency repetitive operations.
Fig. 3 shows the operations of engaging and disengaging the powder clutch. When voltage is applied to the exciting coil, the exciting current rises exponentially with the coil time constant (T = L/R) determined by resistance R and inductance L of the exciting coil. Torque rises very slightly behind the exciting current to the setting torque following the exciting current regardless of the slip rotation speeds on the driving side and driven side. The clutch continues to accelerate the load with that torque.
In other words, the clutch can raise the torque to the preset level even if the driving side and driven side are not perfectly connected. This characteristic is ideal for buffer start/stop and fast start/stop as well as a large clutch heat capacity.
When particularly rapid connection or braking is required, the rise of torque can be accelerated by exciting the coil with a high voltage power supply after reducing the coil time constant by inserting a series resistance in the exciting coil, or by overexciting the voltage 2 or 3 times the rated voltage by the torque time constant.
At the rated excitation, the torque rises perfectly in coil time constant T of 4 or 5T. On the other hand, the time taken for the torque to disappear when the excitation is interrupted is approx. 1 T.
For the coil time constants for individual models, refer to the respective specification tables.

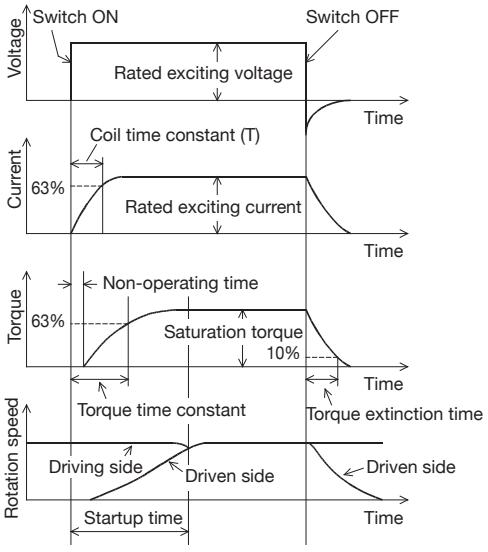

Fig. 3 Operating characteristics of powder clutch

Table 1 ZKB series coil time constants and torque time constants

Model name	Coil time constant (s)	Torque time constant (s)
ZKB-0.06AN	0.03	0.09
ZKB-0.3AN	0.08	0.13
ZKB-0.6AN	0.08	0.13
ZKB-1.2BN	0.10	0.18
ZKB-2.5BN	0.12	0.20
ZKB-5BN	0.13	0.27
ZKB-10BN	0.25	0.5
ZKB-20BN	0.35	1.2
ZKB-40BN	0.40	1.5

Table 2 ZA series coil time constants and torque time constants

Model name	Coil time constant (s)	Torque time constant (s)
ZA-0.6A1	0.04	0.08
ZA-1.2A1	0.04	0.10
ZA-2.5A1	0.06	0.13
ZA-5A1	0.09	0.17
ZA-10A1	0.14	0.30
ZA-20A1	0.30	0.90
ZA-0.6Y	0.10	0.20
ZA-1.2Y1	0.13	0.20
ZA-2.5Y1	0.15	0.25
ZA-5Y1	0.17	0.35
ZA-10Y1	0.30	0.70
ZA-20Y1	0.60	1.0
ZA-40Y	0.60	1.3

Table 3 ZKG series coil time constants and torque time constants

Model name	Coil time constant (s)	Torque time constant (s)
ZKG-5AN	0.02	0.04
ZKG-10AN	0.03	0.07
ZKG-20AN	0.05	0.10
ZKG-50AN	0.06	0.13
ZKG-100AN	0.09	0.37
ZKG-5YN	0.020	0.04
ZKG-10YN	0.020	0.04
ZKG-20YN	0.034	0.07
ZKG-50YN	0.045	0.09

Table 4 ZX-YN series coil time constants and torque time constants

Model name	Coil time constant (s)	Torque time constant (s)
ZX-0.3YN-24	0.035	0.09
ZX-0.6YN-24	0.05	0.1
ZX-1.2YN-24	0.07	0.15

Note 1. The time constants of ZKB-XN, YN, WN, and HBN are the same as those in Table 1.

Note 2. The values in the tables are measurement examples of the slip rotation speed of 200 r/min after completion of running-in.
If the powder clutch has been left for a long time or the idling time is long, the torque time constant may become larger. Also note that as the powder deteriorates, the torque time constant increases.

Note 3. The tables show the values at a coil temperature of 75°C.

4. Allowable continuous heat dissipation

Although the powder clutch/brake can be used in continuous slip mode, the temperature of clutch/brake parts including powder rises due to the heat generated by slip. To solve this problem, an allowable continuous heat dissipation is provided for each model, and the powder clutch/brake needs to be used within that range.
Note that the allowable continuous heat dissipation differs depending on the cooling method: natural cooling, forced air cooling, or other means. The rated value is shown for each model, but be careful regarding natural cooling as the value varies depending on the input rotation speed.
For calculation of the heat dissipation being used, refer to page A-42.

5. Allowable connection workload

When starting or braking loads with inertia with the clutch or brake, the powder and working surface slip and generate frictional heat. This heat generation raises the temperature of each part of the clutch/brake as well as the powder itself. If the heat generation is excessive, the temperature of the friction part rises abnormally. To prevent this problem, an allowable connection workload is determined for each model. The clutch/brake should, therefore, be used within this range.

6. Idling torque

Even if the exciting current is interrupted completely, idling torque is generated due to mechanical losses arising from residual magnetism of the powder, grease of the bearing, and friction such as a seal.
Brakes cannot perform torque control below this idling torque.
In the case of clutches, idling torque refers to the torque caused by the output shaft when forced to rotate while being dragged by the input shaft (dragged torque). Clutches, like brakes, cannot perform torque control below this torque.
Since this idling torque depends on the model, refer to the specifications of each model.

■ Structure diagram (typical example)

ZKG-AN structure diagram (typical example)

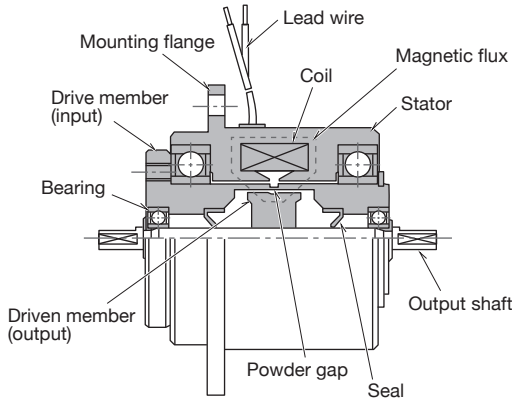

ZKG-YN structure diagram (typical example)

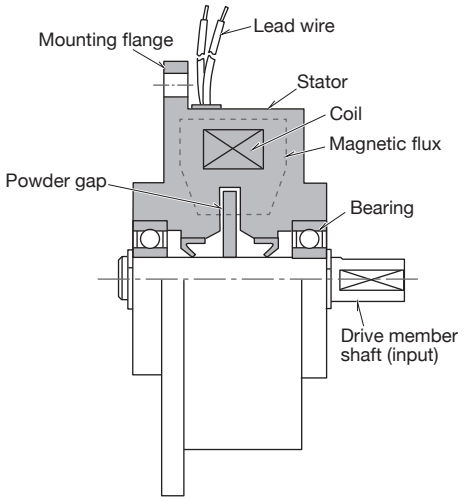

ZKB-BN structure diagram (typical example)

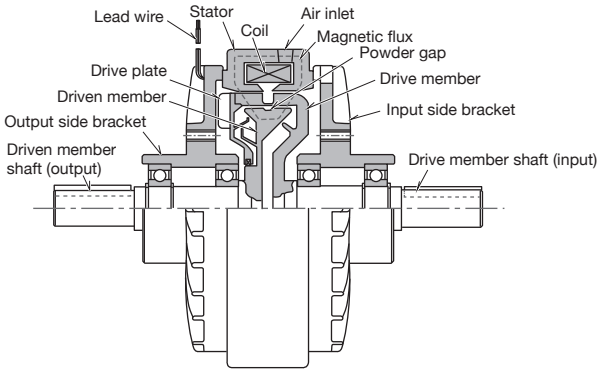

ZKB-XN structure diagram (typical example)

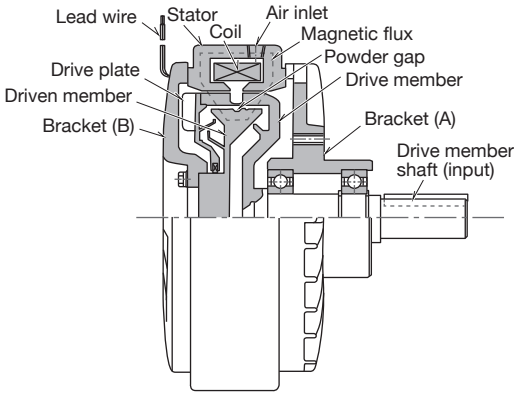

ZKB-HBN structure diagram (typical example)

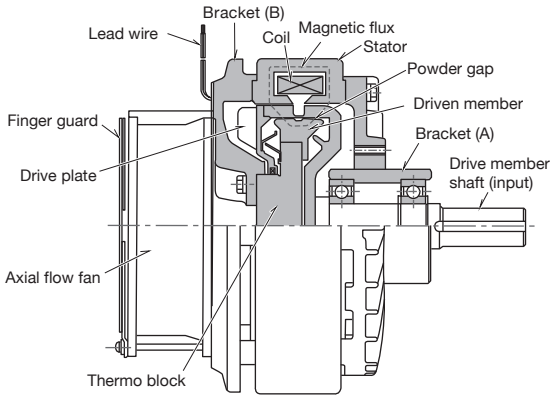

ZKB-WN structure diagram (typical example)

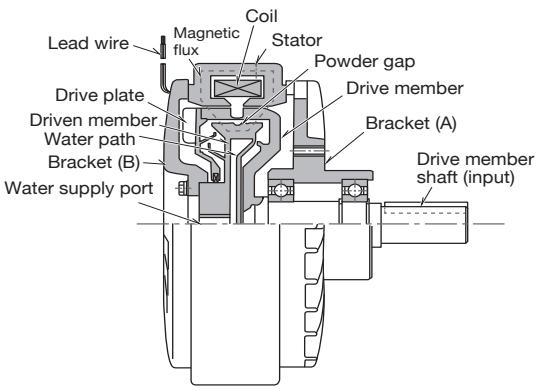

ZK-YN structure diagram (typical example)

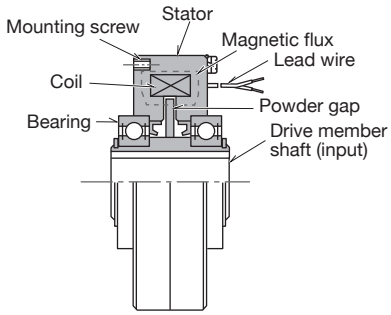

ZA-A1 structure diagram (typical example)

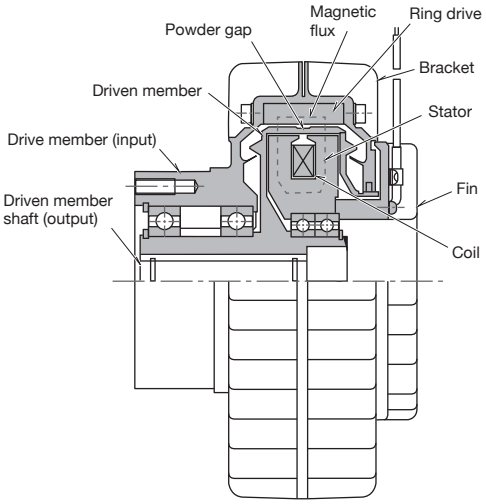

ZA-Y1 structure diagram (typical example)

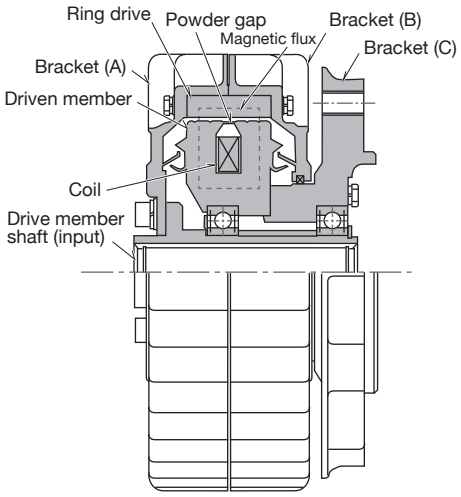

ZKG-AN
micro powder clutch

0.5 1 2 5 10

Natural cooling type

Rated torque: 0.5 to 10 N·m
Natural cooling protruding shaft type
Compact design micro series
Small moment of inertia of rotating part
Available from 5 r/min

Specifications

(Rated voltage: 24 V DC)

Model name	Rated torque (N·m)	Coil (75°C)			Moment of inertia J (kgcm^2)		Allowable rotational speed (r/min)	Weight (kg)
		Current (A)	Power (W)	Time constant (s)	Input side	Output side		
ZKG-5AN	0.5	0.35	8.4	0.02	2.1×10^{-1}	1.7×10^{-2}	1800	0.67
ZKG-10AN	1	0.47	11.3	0.03	3.46×10^{-1}	4.6×10^{-2}	1800	0.88
ZKG-20AN	2	0.55	13.2	0.06	6.80×10^{-1}	1.03×10^{-1}	1800	1.3
ZKG-50AN	5	0.8	19.2	0.06	1.85	4.0×10^{-1}	1800	2.3
ZKG-100AN	10	1.0	24	0.09	5.30	1.10	1800	4.1

Note: The idling torque is 3% or less of the rated torque at 1000 r/min and 5% or less at 1800 r/min.

Outline dimensions (mm)

ZKG-5AN to 50AN

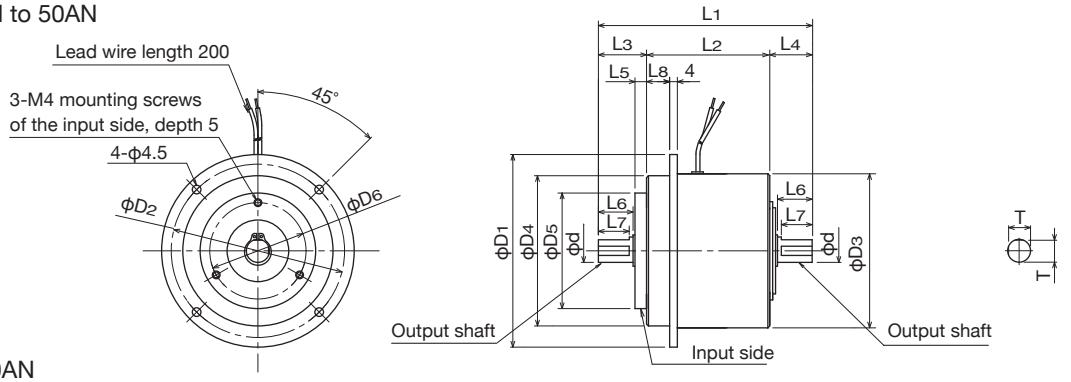

ZKG-100AN

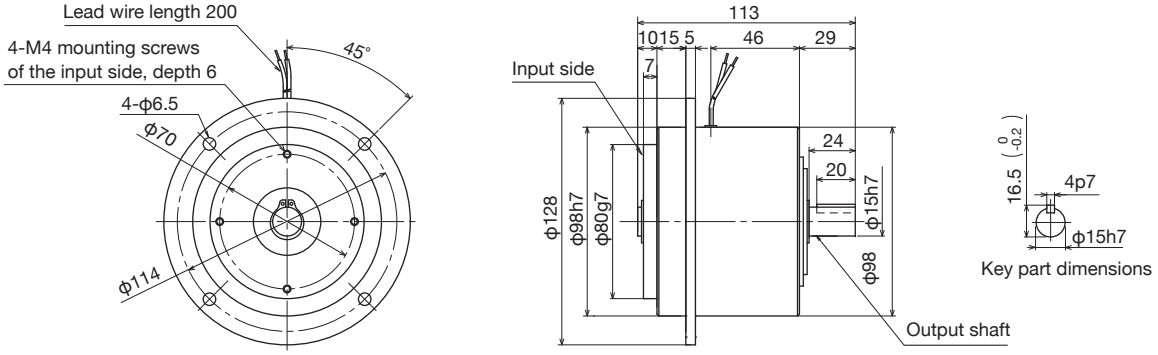

Model name	L1	L2	L3	L4	L5	L6	L7	L8	D1	D2	D3	D4 (h7)	D5 (g7)	D6	d (g6)	T
ZKG-5AN	77	47	16.5	13.5	5.5	10.5	9	8.5	70	60	50	48	40	30	5	4.5
ZKG-10AN	83	48.5	18.5	16	5.5	12	10	8.5	76	66	56	54	42	34	7	6.5
ZKG-20AN	95	53	22.5	19.5	6.5	15	13	9.5	85	75	65	63	48	40	9	8.5
ZKG-50AN	111	64	25	22	6	18	16	12	100	90	80	78	60	50	12	11.5
ZKG-100AN	See the above figures.															

Characteristics

● Standard torque characteristics (typical example)

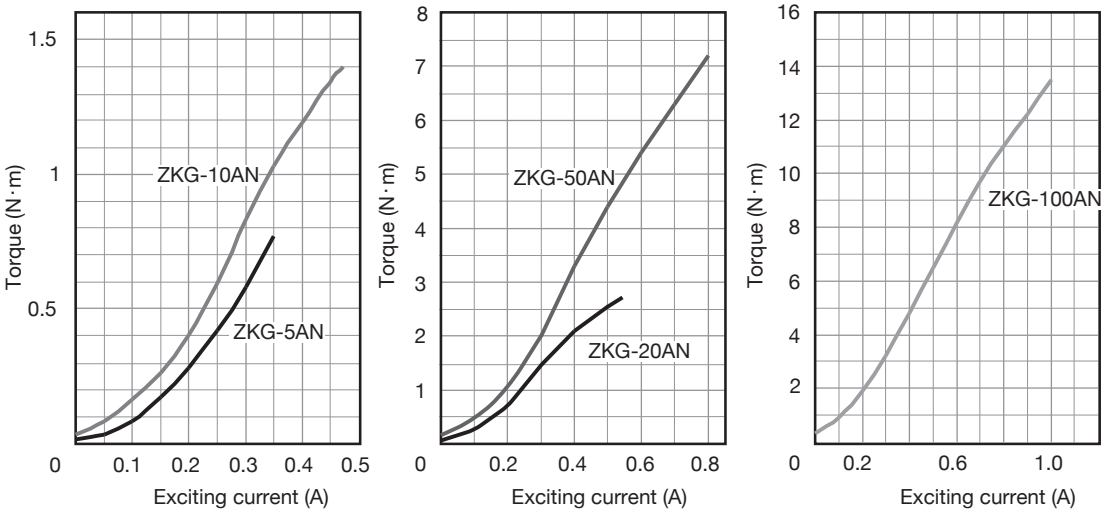

● Allowable continuous heat dissipation characteristics
(see item (4) of mounting example for heat dissipation area)

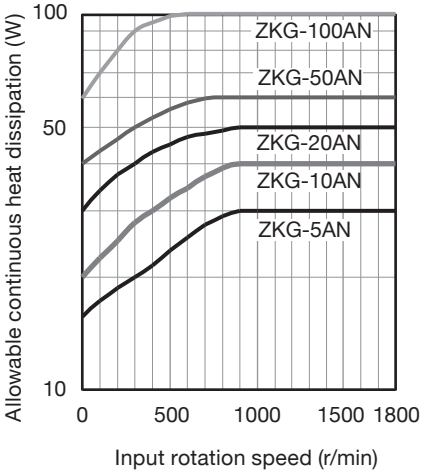

● Allowable continuous slip torque characteristics

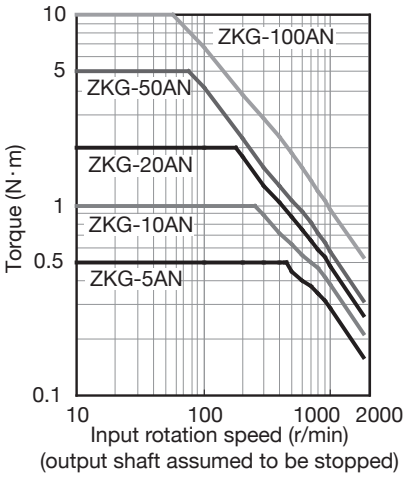

Mounting example

1. Mounting the ZKB-AN type powder clutch

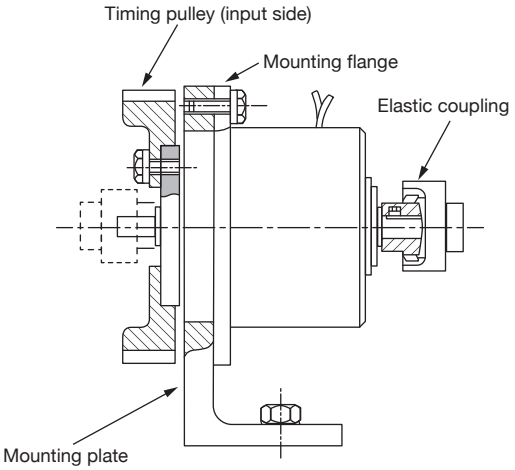

2. When the ZKG-AN type powder clutch is used as a brake

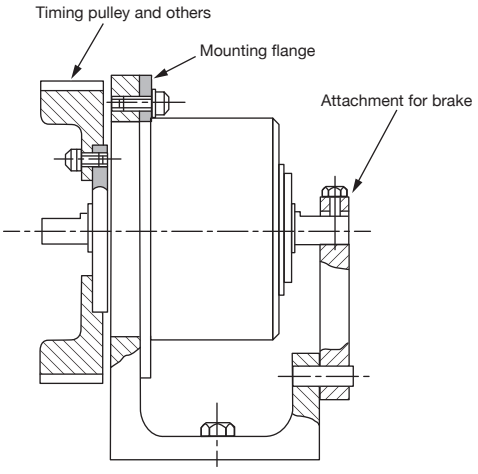

(1) Fasten the fitting part of the mounting flange to the mounting plate and fix it.
(2) Always use an elastic coupling to connect the clutch and load shaft, and set the concentricity, perpendicularity, etc. of the shafts at this time within the allowable value of the elastic coupling to be used.
(3) When mounting a pulley or the like, ensure it is within the range of allowable shaft load (see page A-53).
(4) The heat dissipation area of the mounting plate should be at least 350 cm^2 (ZKG-100AN is 650 cm^2) or more.
(5) Pay attention to the length of the mounting screw on the input side (using a screw of the depth or more described in the external dimensions may damage the internal bearing).

ZKB-AN
powder clutch

0.6 3 6

Natural cooling type

Rated torque: 0.6 to 6 (N·m)
Natural cooling protruding shaft type
Available from 5 r/min

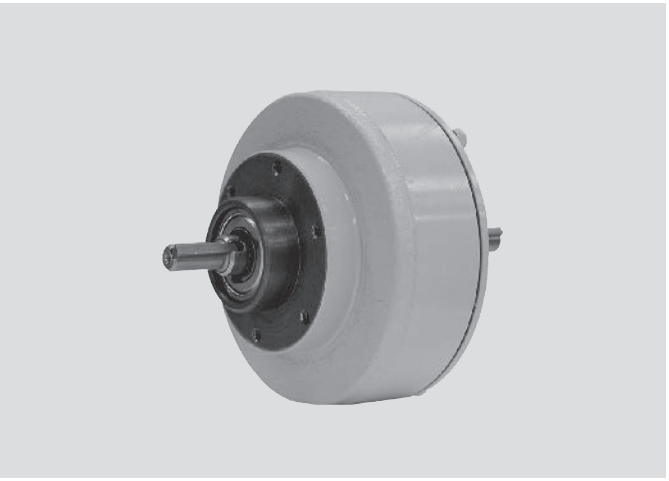

Specifications

(Rated voltage: 24 V DC)

Model name	Rated torque (N·m)	Coil (75°C)			Moment of inertia J (kgm^2)		Allowable rotational speed (r/min)	Weight (kg)	Powder weight (g)
		Current (A)	Power (W)	Time constant (s)	Input side	Output side			
ZKB-0.06AN	0.6	0.46	11	0.03	6.10×10^{-5}	6.60×10^{-6}	1800	1.8	3.5
ZKB-0.3AN	3	0.53	12.7	0.08	3.00×10^{-4}	8.00×10^{-5}	1800	3.3	7.5
ZKB-0.6AN	6	0.81	19.4	0.08	6.00×10^{-4}	1.83×10^{-4}	1800	4	10

Note: The idling torque of 0.06 AN is 4% or less of the rated torque, that of 0.3 AN is 2% or less, and that of 0.6 AN is 1% or less.

Outline dimensions (mm)

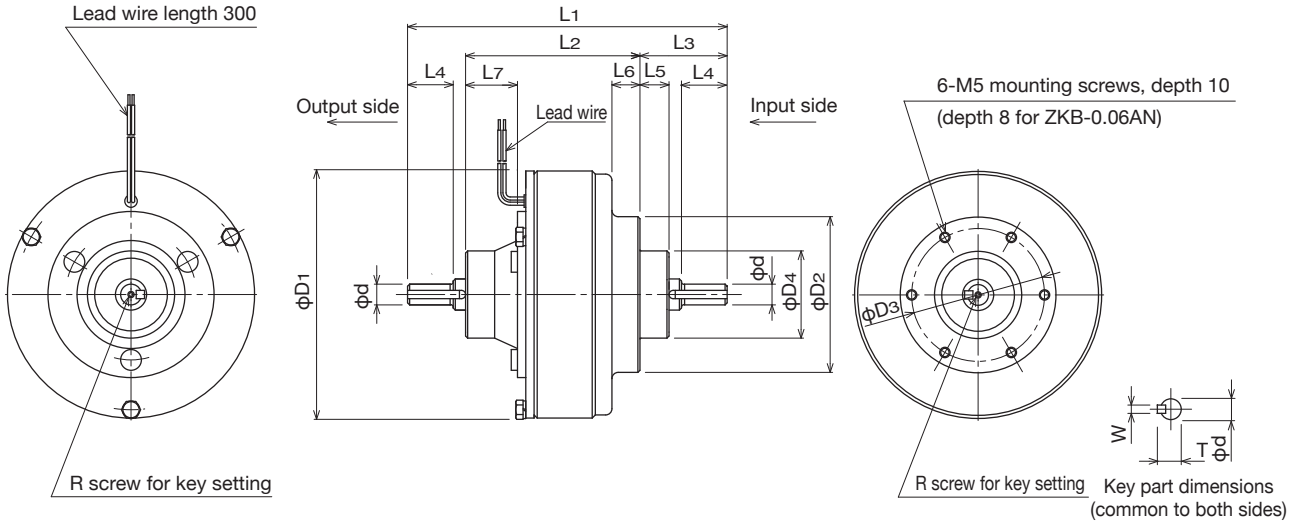

(Paint color Munsell 10Y 7.5/1)

Model name	L1	L2	L3	L4	L5	L6	L7	D1	D2	D3	D4 (g7)	Q	R		Key part		
													Diameter	Depth	d (h7)	W (p7)	T $(^{0}_{-0.2})$
ZKB-0.06AN	132	65	41	22	15	9	16	88	70	55	33	-	-	-	8	3	9.1
ZKB-0.3AN	154	84	42	22	14	13.5	24.5	120	75	64	42	-	M3	6	10	4	11.5
ZKB-0.6AN	164	86	46	26	14	16	22	134	80	64	42	-	M4	8	12	4	13.5

Characteristics

● Standard torque characteristics (typical example)

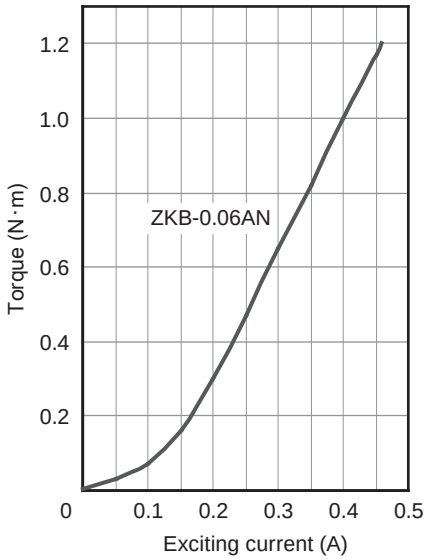

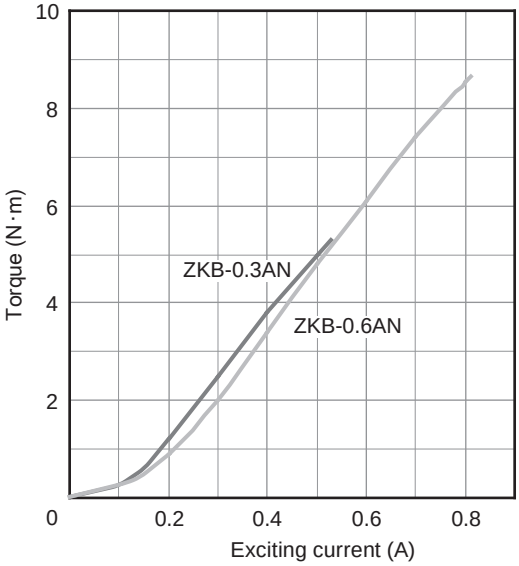

● Allowable continuous heat dissipation characteristics

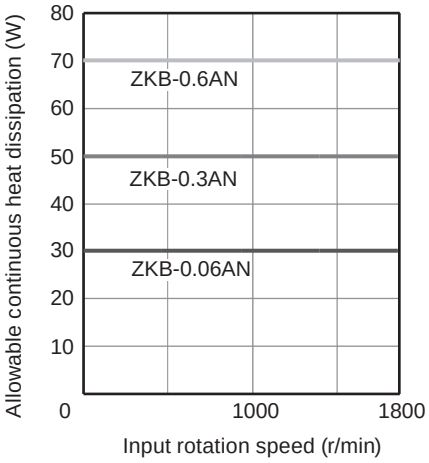

● Allowable continuous slip torque characteristics

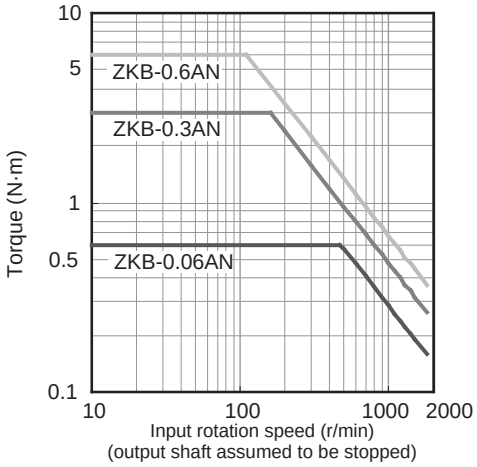

Mounting example

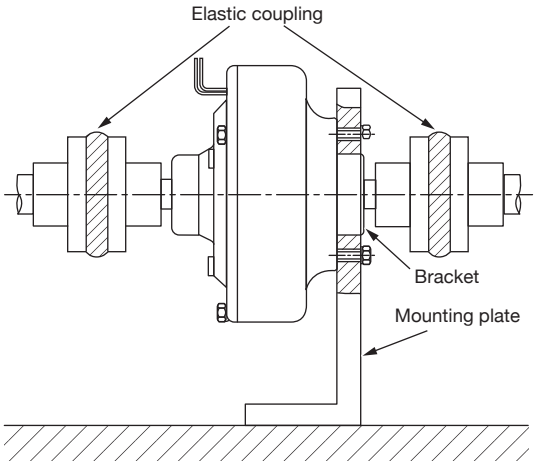

(1) Fasten the fitting part of the bracket to the mounting plate and fix it.
(2) Always use an elastic coupling to connect the clutch shaft and load shaft, and set the concentricity, perpendicularity, etc. of the shafts at this time within the allowable value of the elastic coupling to be used.
(3) When mounting a pulley or the like, ensure it is within the range of allowable shaft load (see page A-53).

ZKB-BN
powder clutch

12 25 50

Natural cooling type | Forced air cooling type

Rated torque: 12 to 50 (N·m)
Natural cooling/forced air cooling protruding shaft type
Available from 5 r/min
The heat capacity is increased by blowing air into the air gap.

Specifications

(Rated voltage: 24 V DC)

Model name	Rated torque (N·m)	Coil (75°C)			Moment of inertia J (kgm^2)		Forced air cooling allowable continuous heat dissipation (slip rate)*			Allowable rotational speed (r/min)	Weight (kg)	Powder weight (g)
		Current (A)	Power (W)	Time constant (s)	Input side	Output side	Wind pressure (Pa)	Air volume (m^3/min)	Power (W)			
ZKB-1.2BN	12	0.94	22.5	0.10	1.34×10^{-3}	4.90×10^{-4}	3×10^{4}	0.2	250	1800	5.5	20
ZKB-2.5BN	25	1.24	30	0.12	3.80×10^{-3}	1.49×10^{-3}	5×10^{4}	0.4	380	1800	10	33
ZKB-5BN	50	2.15	51.5	0.13	9.50×10^{-3}	4.80×10^{-3}	1×10^{5}	0.6	700	1800	16	60

Notes: 1. *: For the cooling air, be sure to use clean dry air passed through an air filter (complete oil removal type).
2. The idling torque is 1% or less of the rated torque.

Outline dimensions (mm)

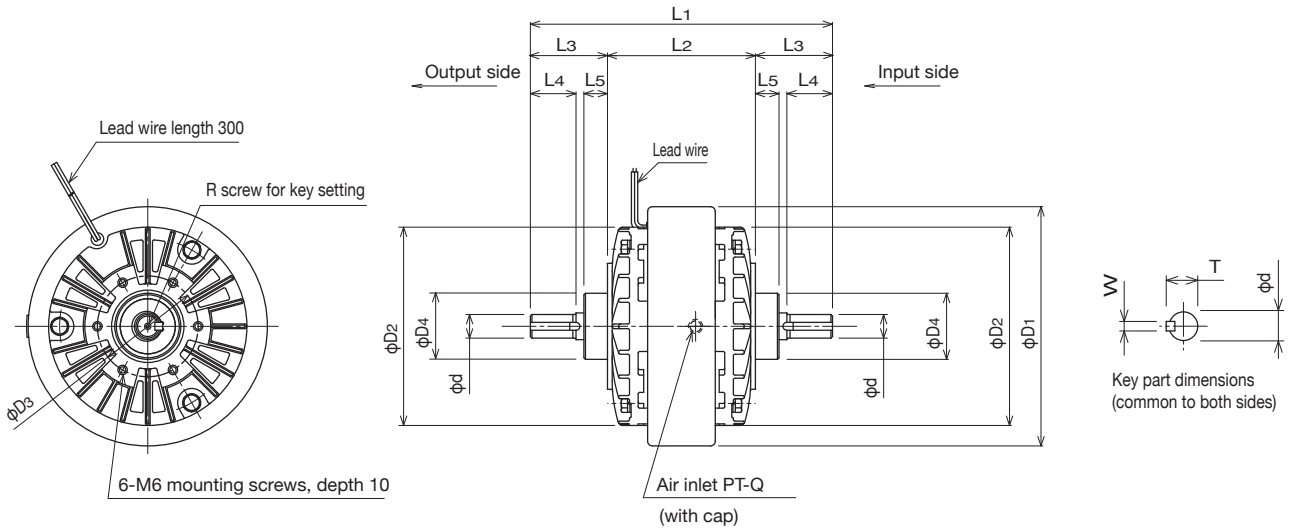

(Paint color Munsell 10Y 7.5/1)

Model name	L1	L2	L3	L4	L5	D1	D2	D3	D4 (g7)	Q	R		Key part		
											Diameter	Depth	d (h7)	W (p7)	T $(^{0}_{-0.2})$
ZKB-1.2BN	192	94	49	29	15	152	126	64	42	1/8	M4	8	15	5	17
ZKB-2.5BN	230	102	64	43	17	182	160	78	55	1/8	M5	10	20	5	22
ZKB-5BN	294	112	91	55	30	219	196	100	74	1/4	M6	12	25	7	28

Characteristics

● Standard torque characteristics (typical example)

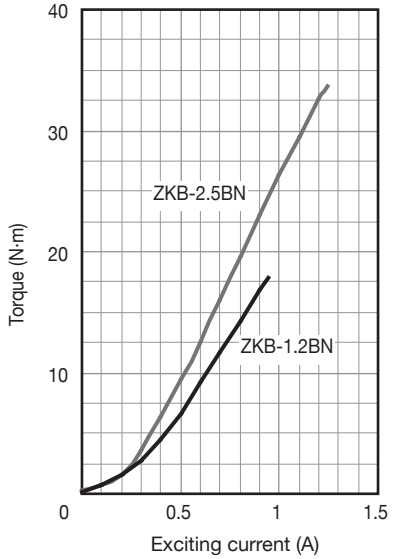

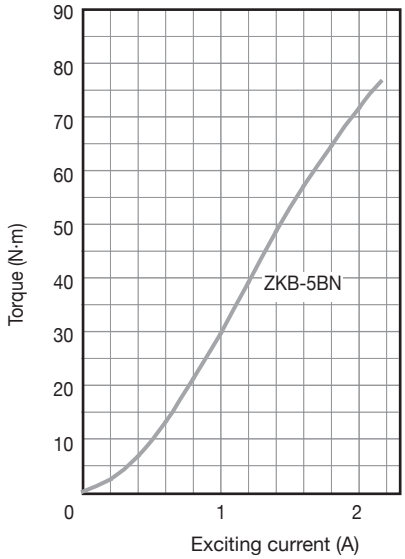

● Allowable continuous heat dissipation characteristics (at natural cooling)

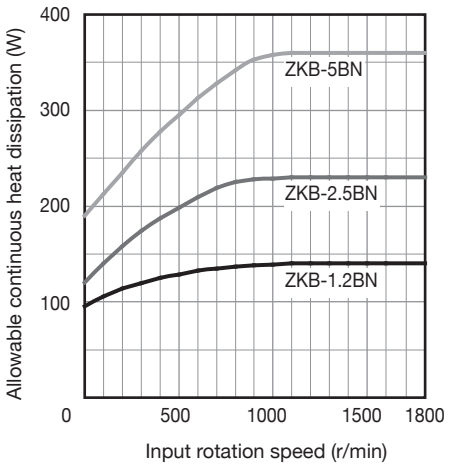

● Allowable continuous slip torque characteristics (at natural cooling)

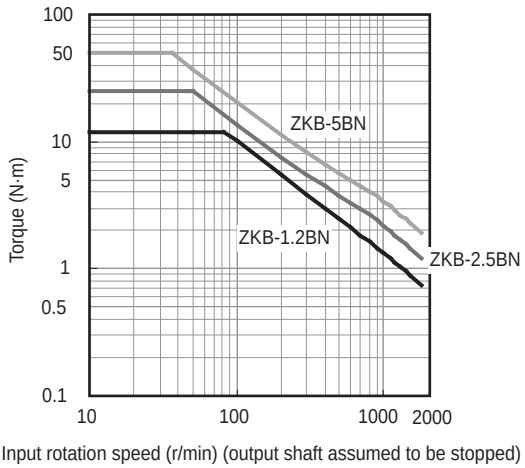

Mounting example

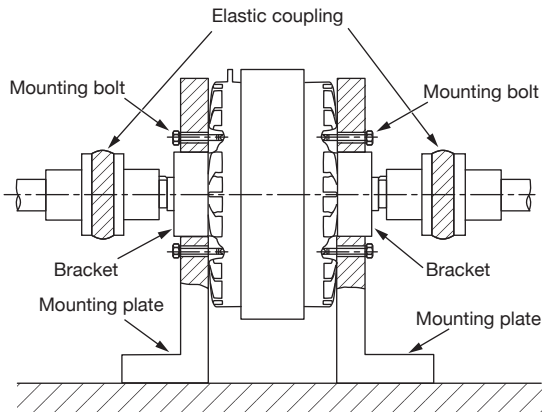

(1) Fasten the fitting part of the bracket to the mounting plate and fix it.
(2) Always use an elastic coupling to connect the clutch shaft and load shaft, and set the concentricity, perpendicularity, etc. of the shafts at this time within the allowable value of the elastic coupling to be used.
(3) When mounting a pulley or the like, ensure it is within the range of allowable shaft load (see page A-53).
(4) For the ZKB-5BN, install mounting plates on both sides.

ZKB-BN
powder clutch

100 200 400

Natural cooling type | Forced air cooling type

Rated torque: 100 to 400 (N·m)
Natural cooling/forced air cooling protruding shaft type
Available from 5 r/min
The heat capacity is increased by blowing air into the air gap.

Specifications

(Rated voltage: 24 V DC)

Model name	Rated torque (N·m)	Coil (75°C)			Moment of inertia J (kgm^2)		Forced air cooling allowable continuous heat dissipation (slip rate)*			Allowable rotational speed (r/min)	Weight (kg)	Powder weight (g)
		Current (A)	Power (W)	Time constant (s)	Input side	Output side	Wind pressure (Pa)	Air volume (m^3/min)	Power (W)			
ZKB-10BN	100	2.4	57.6	0.25	3.50×10^{-2}	2.50×10^{-2}	6×10^{4}	1.1	1100	1800	37	140
ZKB-20BN	200	2.7	64.8	0.37	9.15×10^{-2}	6.89×10^{-2}	5×10^{4}	1.6	1900	1800	59	225
ZKB-40BN	400	3.5	84	0.40	2.40×10^{-1}	2.20×10^{-1}	2×10^{5}	2.0	2800	1800	108	370

Notes: 1. *: For the cooling air, be sure to use clean dry air passed through an air filter (complete oil removal type).
2. The idling torque is 1% or less of the rated torque.

Outline dimensions (mm)

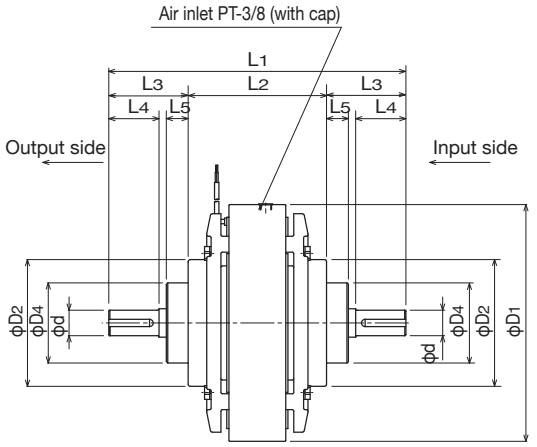

ZKB-10BN, 20BN

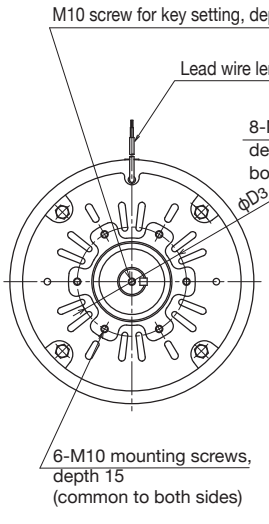

ZKB-40BN

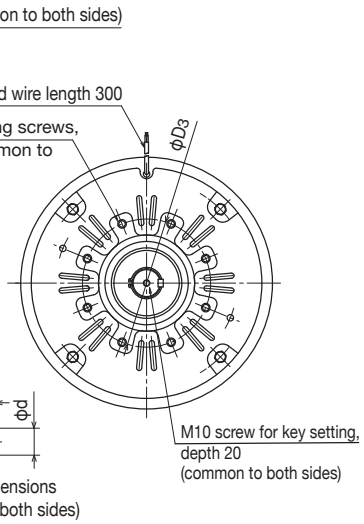

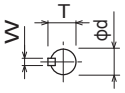

Key part dimensions (common to both sides)

(Paint color Munsell 10Y 7.5/1)

Model name	L_1	L_2	L_3	L_4	L_5	D_1	D_2	D_3	D_4 (g7)	Key part		
										d (h7)	W (p7)	T ($^{0}_{-0.2}$)
ZKB-10BN	360	160	100	65	28	278	160	140	100	30	7	33
ZKB-20BN	408	190	109	69	30	327	174	150	110	35	10	38.5
ZKB-40BN	500	221	139.5	92	35	395	230	200	130	45	12	48.5

Characteristics

● Standard torque characteristics (typical example)

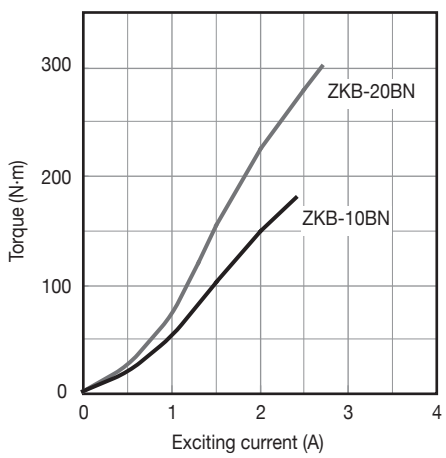

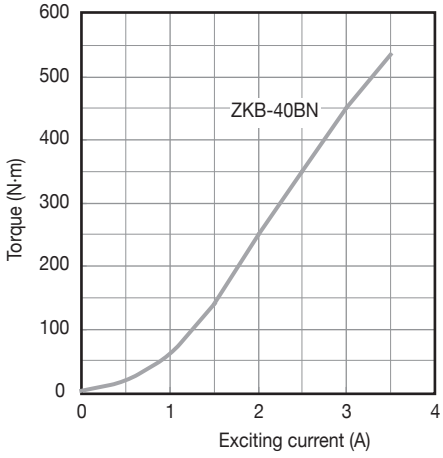

● Allowable continuous heat dissipation characteristics
(at natural cooling)

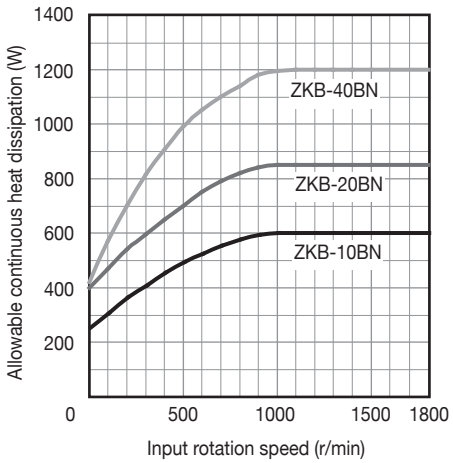

● Allowable continuous slip torque characteristics
(at natural cooling)

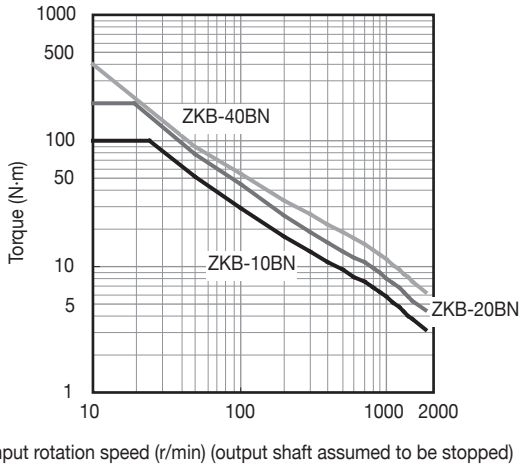

Mounting example

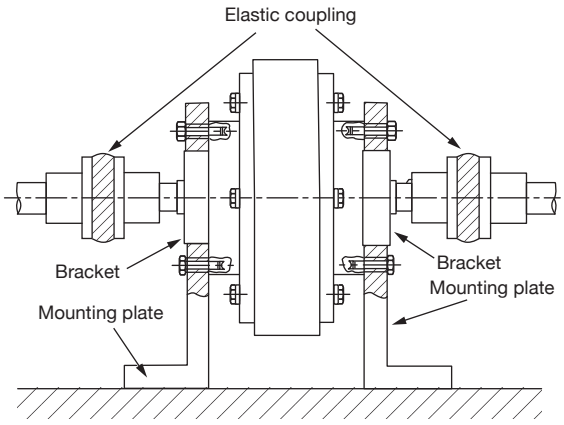

(1) Fasten the fitting part of the bracket to the mounting plate and fix it.
(2) Always use an elastic coupling to connect the clutch shaft and load shaft, and set the concentricity, perpendicularity, etc. of the shafts at this time within the allowable value of the elastic coupling to be used.
(3) When mounting a pulley or the like, ensure it is within the range of allowable shaft load (see page A-53).
(4) Install mounting plates on both sides.

ZKB-B-909
powder clutch

12 50 100 200

Natural cooling type

Rated torque: 12 to 200 (N·m)
Explosion-proof/natural cooling/protruding shaft type
[made-to-order product]
Available from 15 r/min
Explosion-proof structure based on the ZKB-B powder clutch

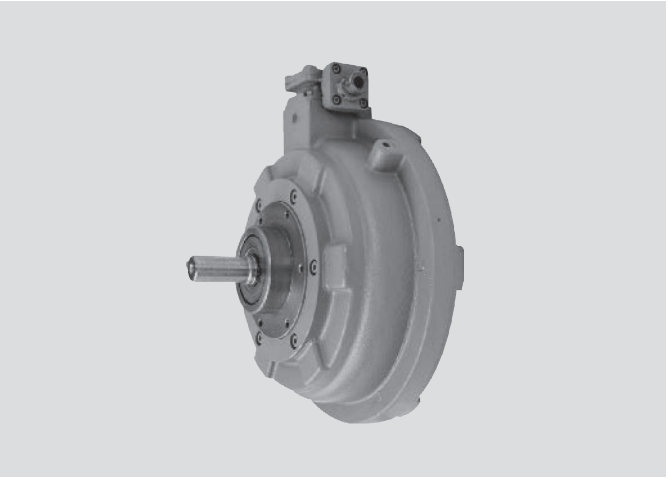

Specifications

(Rated voltage: 24 V DC)

Model name	Rated torque (N·m)	Coil (75°C)			Moment of inertia J (kgm^2)		Allowable rotational speed (r/min)	Weight (kg)	Powder weight (g)
		Current (A)	Power (W)	Time constant (s)	Input side	Output side			
ZKB-1.2B4-909	12	1.4	33.6	0.10	1.30×10^{-4}	4.50×10^{-4}	1800	17.5	20
ZKB-5B4-909	50	2.8	67.2	0.11	1.05×10^{-2}	5.25×10^{-3}	1800	30	55
ZKB-10B2-909	100	3.6	86.4	0.21	3.50×10^{-2}	1.85×10^{-2}	1800	70	105
ZKB-20B2-909	200	3.8	91.2	0.30	9.25×10^{-2}	5.75×10^{-2}	1800	105	160

Note: The idling torque is 2% or less of the rated torque.

Outline dimensions (mm)

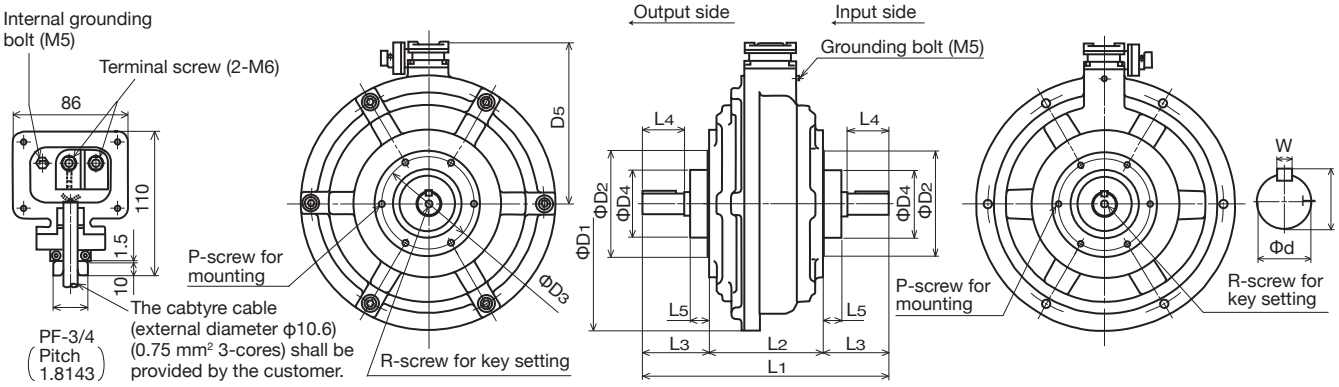

(Paint color Munsell 2.5G 5.5/2.5)

Model name	L_1	L_2	L_3	L_4	L_5	D_1	D_2	D_3	D_4 (g7)	D_5	P			R		Key part		
											Diameter	Quantity	Depth	Diameter	Depth	d (h7)	W (p7)	T $(^{0}_{-0.2})$
ZKB-1.2B4-909	192	108	42	29	8	220	104	64	42	163	M6	6	12	M4	8	15	5	17
ZKB-5B4-909	294	140	77	55	16	276	120	100	74	196	M8	6	12	M6	12	25	7	28
ZKB-10B2-909	360	160	100	65	28	366	158	140	100	237	M10	6	15	M10	20	30	7	33
ZKB-20B2-909	408	190	109	69	30	415	172	150	110	262	M10	6	15	M10	20	35	10	38.5

Note: When using it as a brake, fix the output side of the clutch.

Mounting example

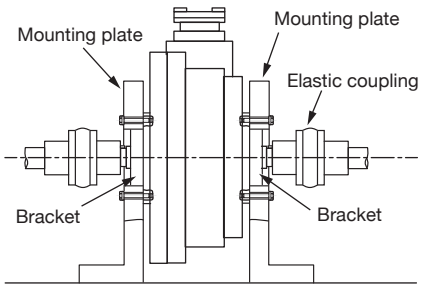

(1) Fasten the fitting part of the bracket to the mounting plate and fix it.
(2) Always use an elastic coupling to connect the clutch shaft and load shaft, and set the concentricity, perpendicularity, etc. of the shafts at this time within the allowable value of the elastic coupling to be used.
(3) When mounting a pulley or the like, ensure it is within the range of allowable shaft load (see page A-53).
(4) Install mounting plates on both sides.
(5) Make sure to ground the clutch by using a grounding bolt.

Characteristics

● Standard torque characteristics (typical example)

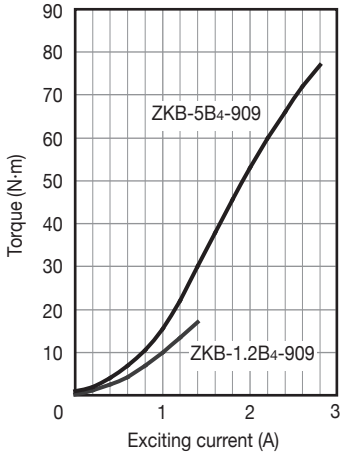

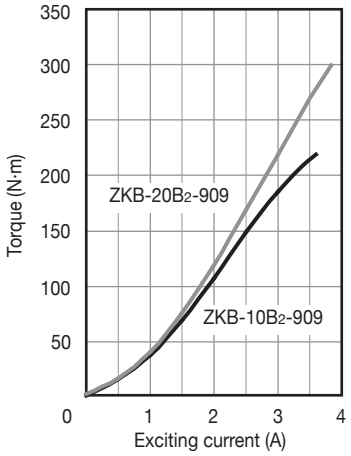

● Allowable continuous heat dissipation characteristics

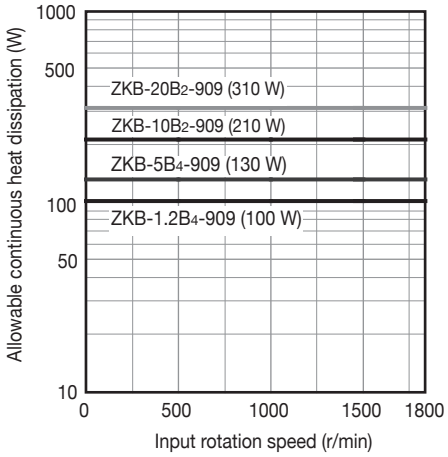

● Allowable continuous slip torque characteristics

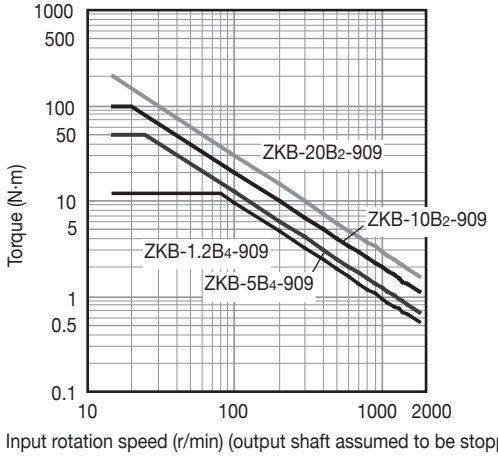

Applicable standard and range of applicable explosive gas

1. Applicable standard

The corresponding powder clutch has been designed and manufactured according to the factory electrical equipment explosion-proof guideline (published by The former Ministry of Labor National Institute of Industrial Safety.

2. Range of applicable explosive gas

The explosion-proof type clutch has a fully closed structure so that even if an explosive gas explosion occurs inside the clutch, the cover container withstands the explosion pressure and does not ignite the explosive gas on the outside. In order to set the standard for the degree of explosion-proof performance, the explosion-proof standard classifies explosive materials into five stages of ignition degrees G1, G2, G3, G4, and G5 according to ignition temperature as shown in Table 1. The standard also classifies explosion grade as 1st, 2nd, and 3rd classes as shown in Table 2 according to the value of the gap at the time of ignition spread. According to these classifications, representative gases are classified as shown in Table 3.
The explosion-proof type powder clutch can be used for Class 1 and Class 2 hazardous locations where ignition or explosion could be caused by gas steam of ignition degrees G1 to G3 explosion grade 1. The bold frame in the table indicates the range where explosion-proof type powder clutches can be used.

Table 1 Classification of ignition degrees

Ignition degree G1	Ignition temperature over 450°C
Ignition degree G2	Ignition temperature over 300°C to 450°C
Ignition degree G3	Ignition temperature over 200°C to 300°C
Ignition degree G4	Ignition temperature over 135°C to 200°C
Ignition degree G5	Ignition temperature over 100°C to 135°C

Table 2 Classification of explosion grades

Explosion grade 1	Value of gap over 0.6 mm
Explosion grade 2	Value of gap over 0.4 mm to 0.6 mm
Explosion grade 3	Value of gap 0.4 mm or less

Note: These values are the minimum values at the time of ignition spread generated at a gap depth of 25 mm.

Table 4 Temperature rise limit (°C) on outer surface of container

Ignition degree	G1	G2	G3	G4	G5
Temperature rise limit	320	200	120	70	40

Table 3 Classification of explosive gases

	G1	G2	G3	G4	G5
1	Acetone Ethane Acetate Ethyl acetate Ammonia Benzene Carbon monox-ide Methane Methanol Propane Toluene	Ethanol Isoamyl acetate 1-butanol Butane Acetic anhydride	Gasoline Hexane	Acetaldehyde Ethyl ether	
2	Coal gas	Ethylene Ethylene oxide			
3	Water gas Hydrogen	Acetylene			Carbon disulfide

ZA-A1 powder clutch

6 12 25 50 100 200

Natural cooling type

Rated torque: 6 to 200 (N·m)
Natural cooling through-shaft type
Available from 15 r/min
Heat capacity increased by rotating the periphery to improve heat dissipation

Specifications

(Rated voltage: 24 V DC)

Model name	Rated torque (N·m)	Coil (75°C)			Moment of inertia J (kgm^2)		Allowable rotational speed (r/min)	Weight (kg)	Powder weight (g)
		Current (A)	Power (W)	Time constant (s)	Input side	Output side			
ZA-0.6A1	6	0.74	17.8	0.04	2.70×10^{-3}	5.00×10^{-4}	1800	2.7	14
ZA-1.2A1	12	0.9	21.6	0.04	6.30×10^{-3}	1.10×10^{-3}	1800	4.5	25
ZA-2.5A1	25	1.1	26.4	0.06	1.20×10^{-2}	2.30×10^{-3}	1800	6.3	39
ZA-5A1	50	1.4	33.6	0.09	2.60×10^{-2}	5.80×10^{-3}	1800	11	60
ZA-10A1	100	2.0	48	0.14	7.00×10^{-2}	1.50×10^{-2}	1800	19.5	117
ZA-20A1	200	2.5	60	0.30	2.10×10^{-1}	0.50×10^{-1}	1000	41	255

Note: The idling torque is 2% or less of the rated torque.

Outline dimensions (mm)

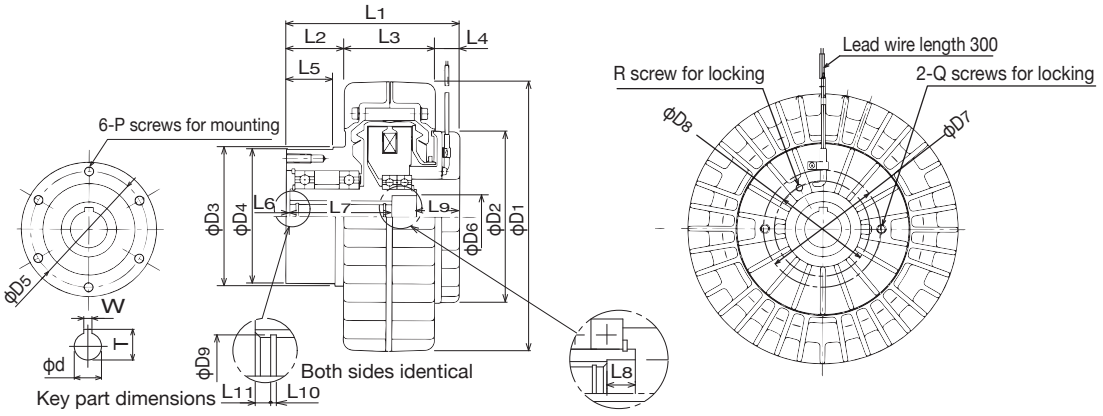

Model name	L1	L2	L3	L4	L5	L6	L7	L8	L9	L10	L11	D1	D2	D3	D4 (g7)	D5	D6	D7	D8	D9	P		R		Q		Key part		
																					Diameter	Depth	Diameter	Depth	Diameter	Depth	d (H7)	W (F8)	T ($^{+0.2}_{0}$)
ZA-0.6A1	86	21	58	7	16	1	56	8	21	1.1	3	128	82	73	70	60	19	60	-	16	M6	12	-	-	M4	8	15	4	16.5
ZA-1.2A1	103	32	58	13	20	2	63	13	25	1.1	4	160	96	-	80	68	24	68	54	19	M6	12	M4	10	M6	11.5	18	5	20
ZA-2.5A1	119	36	66	17	20	2	69	17	31	1.1	4	180	114	-	90	80	27	80	64	21	M6	12	M4	10	M6	12	20	5	22
ZA-5A1	141	47	74	20	20	3	103	-	35	1.3	5	220	140	-	110	95	-	95	78	31.4	M8	15	M6	12	M8	12	30	7	33
ZA-10A1	166	49	100	17	30	4	122	-	40	1.65	5	275	176	130	125	110	-	110	95	37	M10	20	M6	12	M10	18	35	10	38.5
ZA-20A1	198	59	118	21	30	3	150	-	45	1.95	6	335	218	-	155	136	-	125	-	48	M10	20	-	-	M10	15	45	12	49

Removal reference example

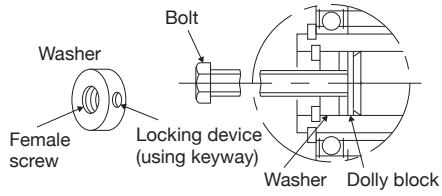

By using the groove (φD9) of the clutch hollow shaft as shown on the left, you can remove the clutch easily by jacking action.
(Dimensions of washers and others should be determined as appropriate with reference to the dimensions of the shaft section.)

Characteristics

● Standard torque characteristics (typical example)

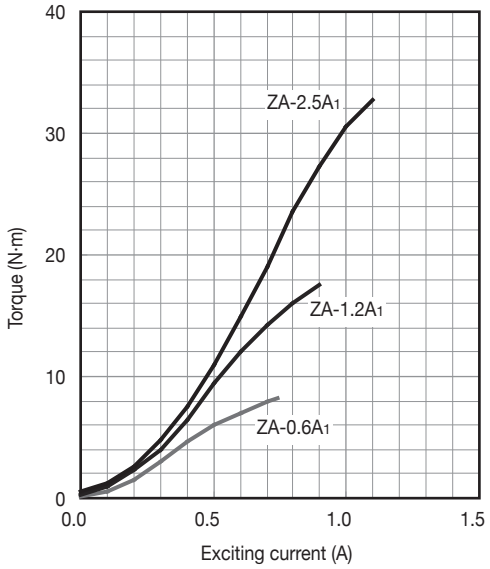

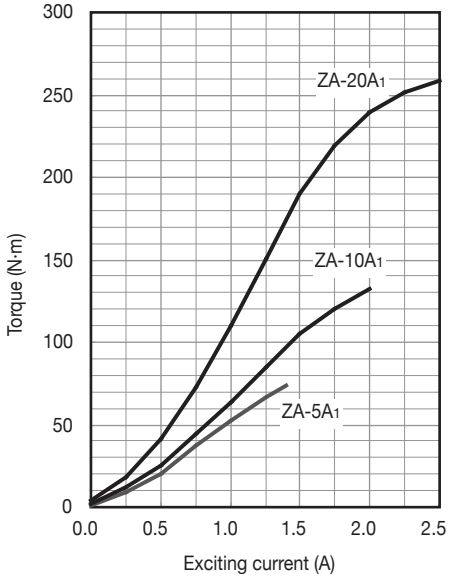

● Allowable continuous heat dissipation characteristics

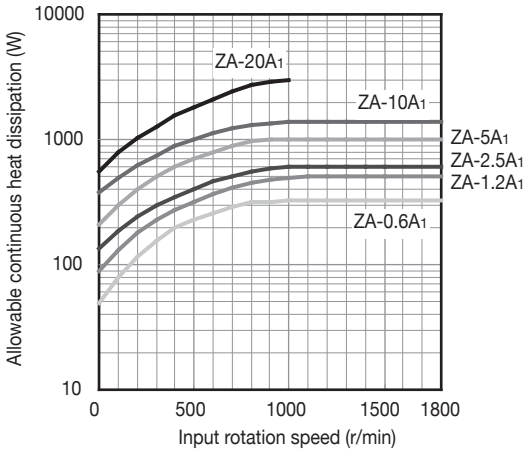

● Allowable continuous slip torque characteristics

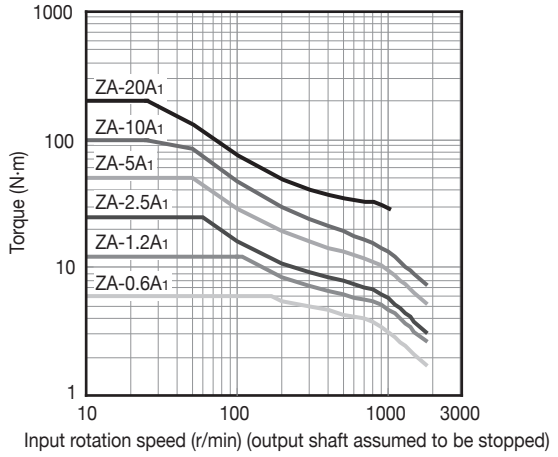

Mounting example

1. In the case of shaft drive

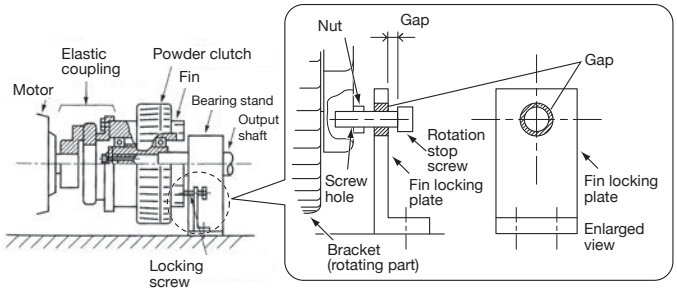

2. In the case of belt drive

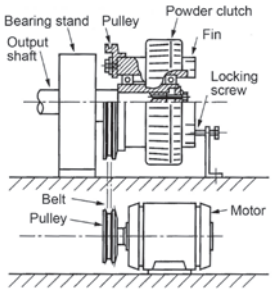

(1) Provide the fin rotation stop screw with a clearance in the axial direction as well as on the side hole of the fin detent plate (arranged by customer) (see the enlarged view).
Tightening the fin applies excessive force to the bearings inside the clutch and may quickly damage the bearings.
(2) Be careful of the length of the fin rotation stop screw. If the fin rotation stop screw is too long, the tip of the screw may interfere with the bracket (rotating part).
(3) Always use an elastic coupling to connect the input side and shaft, and set the concentricity, perpendicularity, etc. of the shafts at this time within the allowable value of the elastic coupling. Provide the elastic coupling with a thrust play.
Installation without thrust play will cause a bearing failure (noise, locking, etc.) inside the clutch.
(4) When using a pulley drive, observe the range of allowable axial load (see page A-53) and do not overstretch the belt. Failure to do so may cause a bearing failure (noise, locking, etc.)
(5) Since the outer periphery rotates, be sure to cover the whole body with a wire mesh or the like with good ventilation.

ZKG-YN
micro powder brake

0.5 1 2 5

Natural cooling type

Rated torque: 0.5 to 5 (N·m)
Natural cooling protruding shaft type
Compact design micro series
Small moment of inertia of rotating part
Available from 5 r/min

Specifications

(Rated voltage: 24 V DC)

Model name	Rated torque (N·m)	Coil (75°C)			Moment of inertia *J* ($kgcm^2$)	Allowable rotational speed (r/min)	Weight (kg)
		Current (A)	Power (W)	Time constant (s)			
ZKG-5YN	0.5	0.35	8.4	0.02	9.40×10^{-3}	1800	0.4
ZKG-10YN	1	0.42	10.1	0.02	2.75×10^{-2}	1800	0.54
ZKG-20YN	2	0.5	12	0.04	5.25×10^{-2}	1800	0.96
ZKG-50YN	5	0.6	14.4	0.05	1.25×10^{-1}	1800	1.3

Note: The idling torque is 3% or less of the rated torque at 1000 r/min and 5% or less at 1800 r/min.

Outline dimensions (mm)

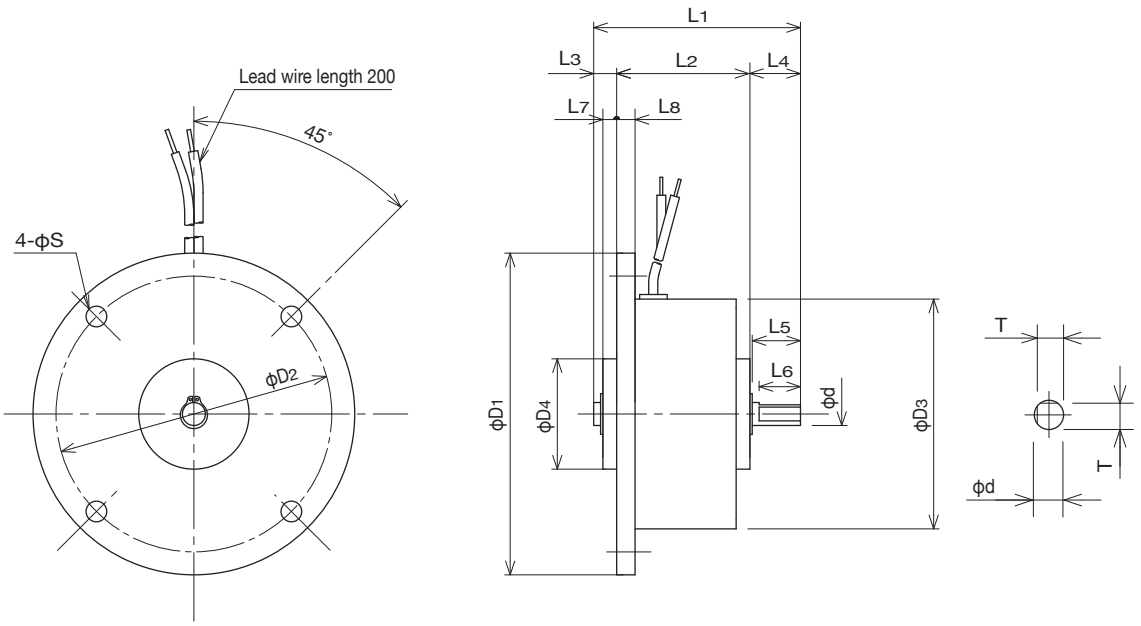

Model name	L1	L2	L3	L4	L5	L6	L7	L8	D1	D2	D3	D4 (g7)	S	d (g7)	T
ZKG-5YN	45	29	5	11	10.5	9	3	4	70	60	50	24	4.5	5	4.5
ZKG-10YN	50	30	7	13	12	10	4	4	76	66	56	30	4.5	7	6.5
ZKG-20YN	59	34	9	16	15	13	6	5	90	80	70	40	4.5	9	8.5
ZKG-50YN	66	36	11	19	18	16	8	5	108	95	82	44	6	15	14

Characteristics

● Standard torque characteristics (typical example)

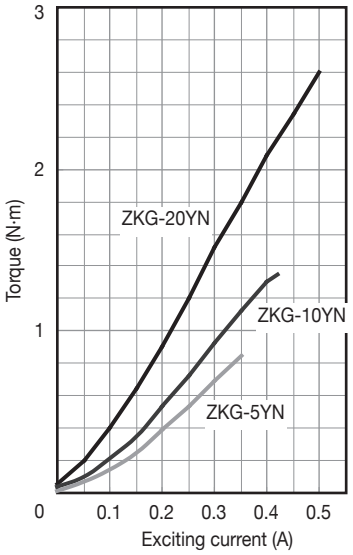

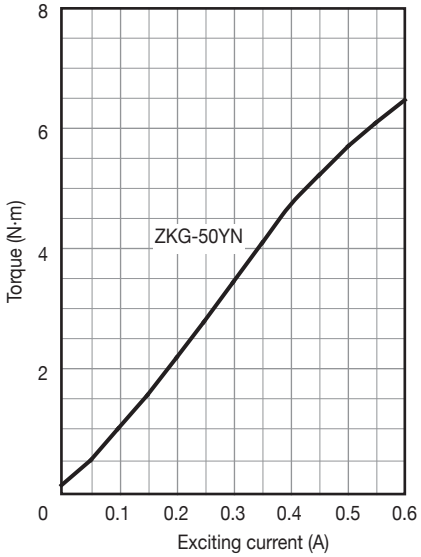

● Allowable continuous heat dissipation characteristics
(heat dissipation area of the mounting plate is 350 cm^2 or more)

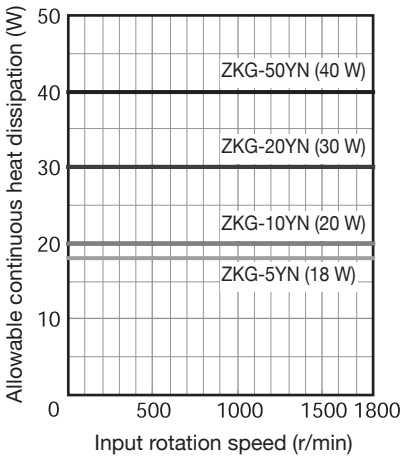

● Allowable continuous slip torque characteristics

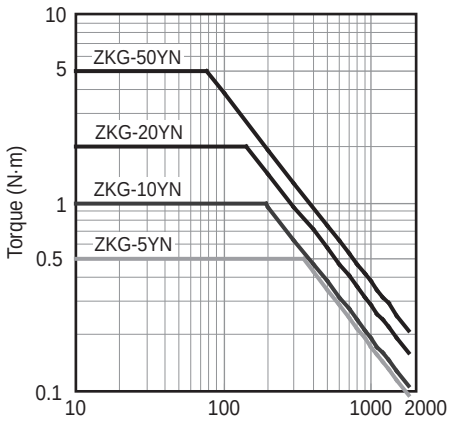

Mounting example

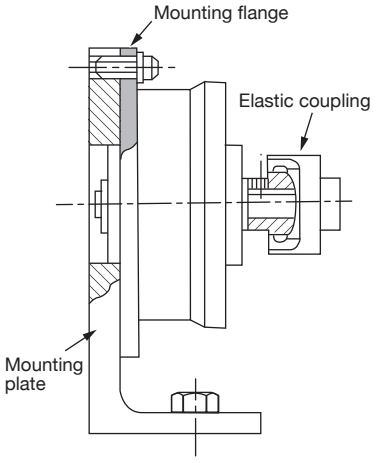

(1) Fasten the fitting part of the mounting flange to the mounting plate and fix it.
(2) Always use an elastic coupling to connect the brake shaft and load shaft, and set the concentricity, perpendicularity, etc. of the shafts at this time within the allowable value of the elastic coupling to be used.
(3) When mounting a pulley or the like, ensure it is within the range of allowable shaft load (see page A-53).
(4) The heat dissipation area of the mounting plate should be at least 350 cm^2.

ZKB-YN
powder brake

0.6 3 6

Natural cooling type

Rated torque: 0.6 to 6 (N·m)
Natural cooling protruding shaft type
Available from 5 r/min

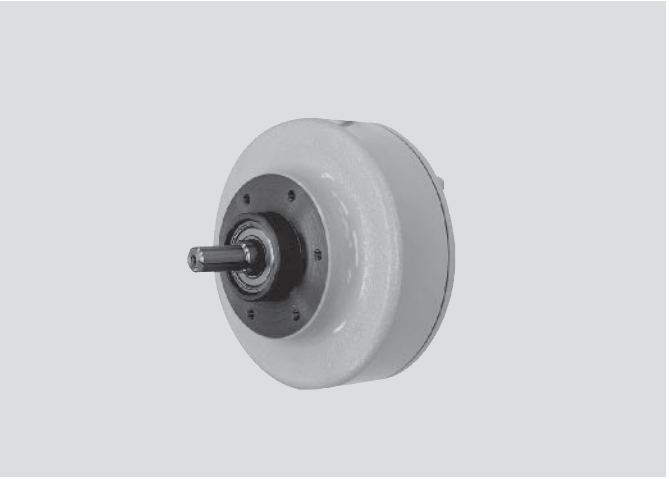

Specifications

(Rated voltage: 24 V DC)

Model name	Rated torque (N·m)	Coil (75°C)			Moment of inertia J (kgm^2)	Allowable rotational speed (r/min)	Weight (kg)	Powder weight (g)
		Current (A)	Power (W)	Time constant (s)				
ZKB-0.06YN	0.6	0.46	11	0.03	6.10×10^{-5}	1800	1.7	3.5
ZKB-0.3YN	3	0.53	12.7	0.08	3.00×10^{-4}	1800	3.1	7.5
ZKB-0.6YN	6	0.81	19.4	0.08	6.00×10^{-4}	1800	3.7	10

Note: The idling torque of 0.06YN is 4% or less of the rated torque, that of 0.3YN is 2% or less, and that of 0.6YN is 1% or less.

Outline dimensions (mm)

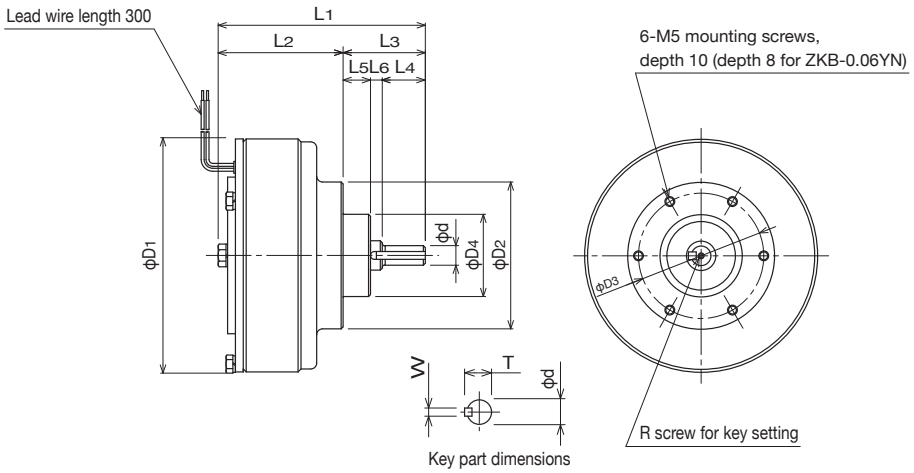

(Paint color Munsell 10Y 7.5/1)

Model name	L1	L2	L3	L4	L5	L6	D1	D2	D3	D4 (g7)	R		Key part		
											Diameter	Depth	d (h7)	W (p7)	T $(^{0}_{-0.2})$
ZKB-0.06YN	93	52	41	22	15	4	88	70	55	33	-	-	8	3	9.1
ZKB-0.3YN	106	64	42	22	14	6	120	75	64	42	M3	6	10	4	11.5
ZKB-0.6YN	114	68	46	26	14	6	134	80	64	42	M4	8	12	4	13.5

Characteristics

● Standard torque characteristics (typical example)

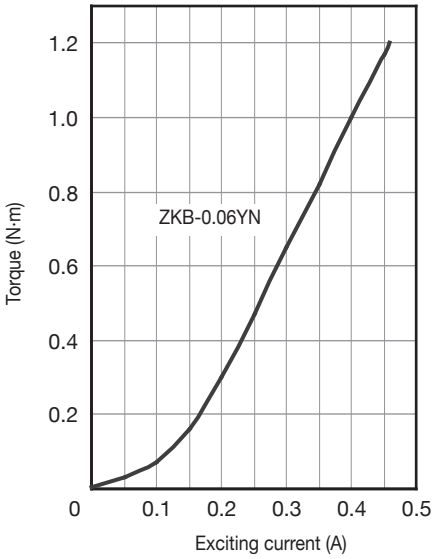

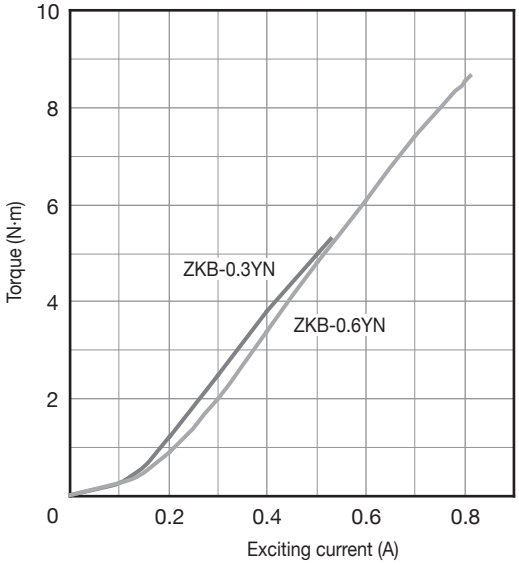

● Allowable continuous heat dissipation characteristics

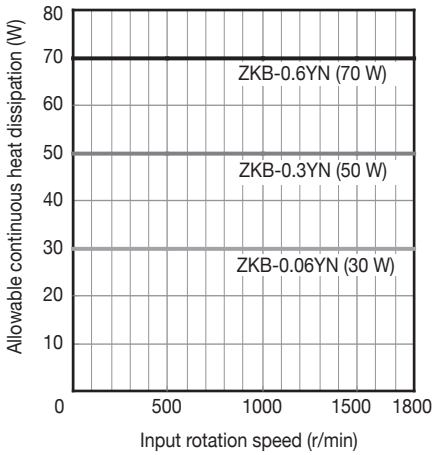

● Allowable continuous slip torque characteristics

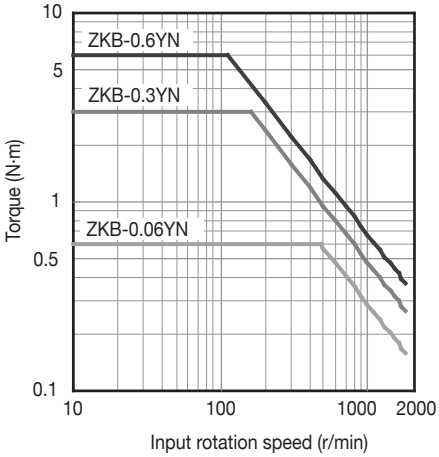

Mounting example

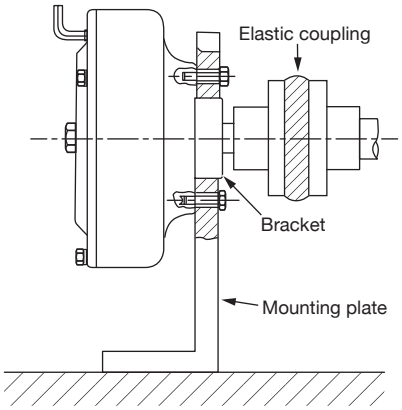

(1) Fasten the fitting part of the bracket to the mounting plate and fix it.
(2) Always use an elastic coupling to connect the brake shaft and load shaft, and set the concentricity, perpendicularity, etc. of the shafts at this time within the allowable value of the elastic coupling to be used.
(3) When mounting a pulley or the like, ensure it is within the range of allowable shaft load (see page A-53).

ZKB-XN
powder brake

12 25 50

Natural cooling type | Forced air cooling type

Rated torque: 12 to 50 (N·m)
Natural cooling/forced air cooling protruding shaft type
Available from 5 r/min
The heat capacity is increased by blowing air into the air gap.

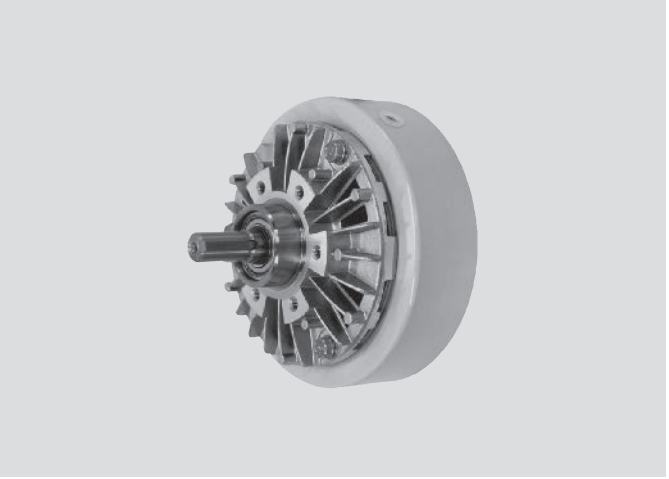

Specifications

(Rated voltage: 24 V DC)

Model name	Rated torque (N·m)	Coil (75°C)			Moment of inertia J (kgm^2)	Forced air cooling allowable continuous heat dissipation (slip rate)*			Allowable rotational speed (r/min)	Weight (kg)	Powder weight (g)
		Current (A)	Power (W)	Time constant (s)		Wind pressure (Pa)	Air volume (m^3/min)	Power (W)			
ZKB-1.2XN	12	0.94	22.5	0.10	1.34×10^{-3}	3×10^{4}	0.2	250	1800	5.2	20
ZKB-2.5XN	25	1.24	30	0.12	3.80×10^{-3}	5×10^{4}	0.4	380	1800	9	33
ZKB-5XN	50	2.15	51.5	0.13	9.50×10^{-3}	1×10^{5}	0.6	700	1800	14.5	60

Notes: 1. *: For the cooling air, be sure to use clean dry air passed through an air filter (complete oil removal type).
2. The idling torque is 1% or less of the rated torque.

Outline dimensions (mm)

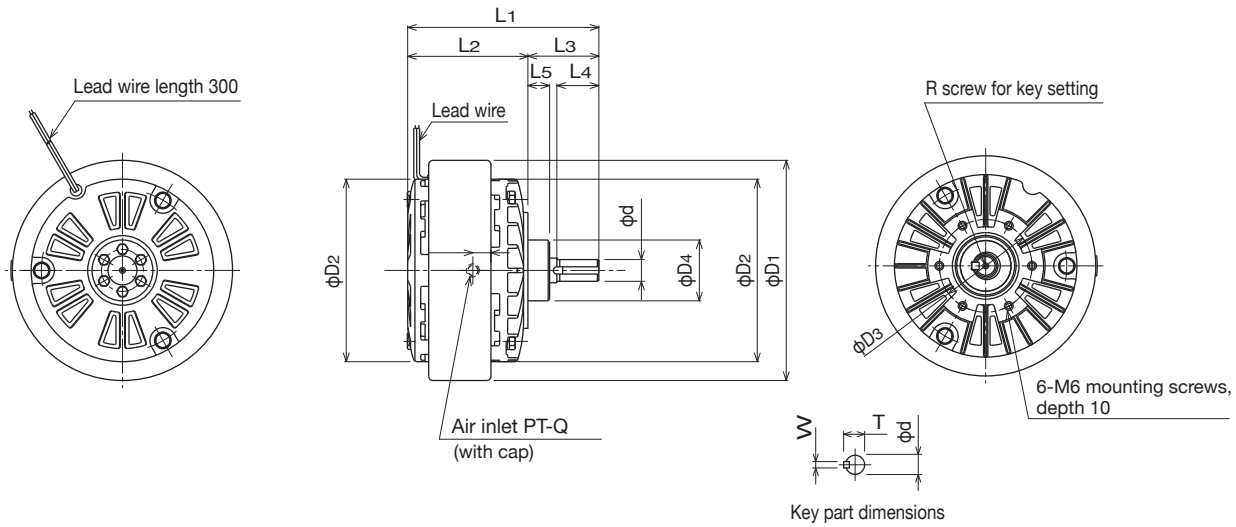

(Paint color Munsell 10Y 7.5/1)

Model name	L1	L2	L3	L4	L5	D1	D2	D3	D4 (g7)	Q	R		Key part		
											Diameter	Depth	d (h7)	W (p7)	T ($^{0}_{-0.2}$)
ZKB-1.2XN	132	83	49	29	15	152	126	64	42	1/8	M4	8	15	5	17
ZKB-2.5XN	155	91	64	43	17	182	160	78	55	1/8	M5	10	20	5	22
ZKB-5XN	193	102	91	55	30	219	196	100	74	1/4	M6	12	25	7	28

Characteristics

● Standard torque characteristics (typical example)

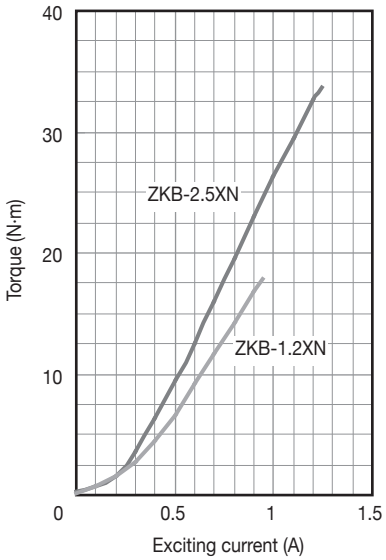

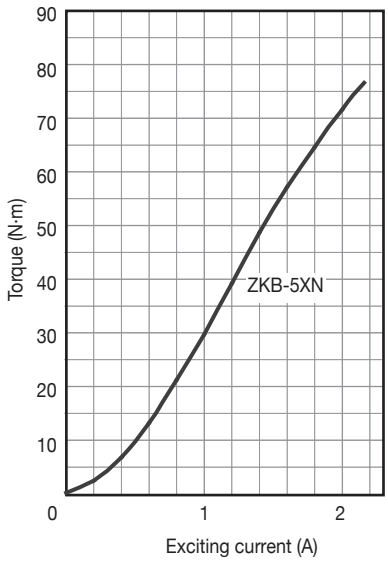

● Allowable continuous heat dissipation characteristics
(at natural cooling)

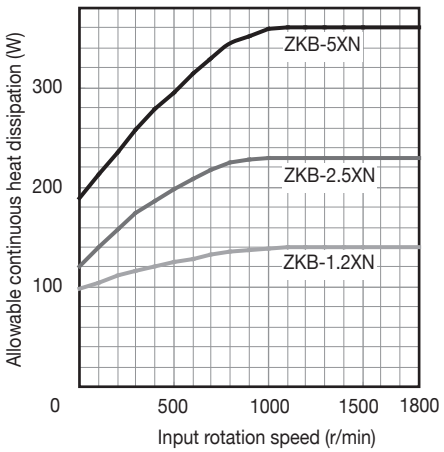

● Allowable continuous slip torque characteristics
(at natural cooling)

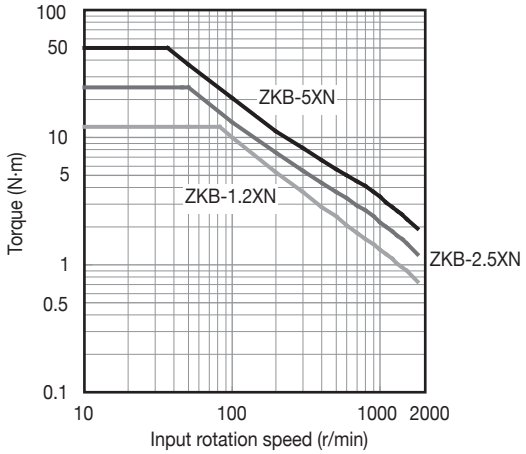

Mounting example

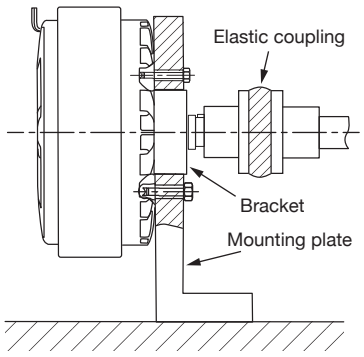

(1) Fasten the fitting part of the bracket to the mounting plate and fix it.
(2) Always use an elastic coupling to connect the brake shaft and load shaft, and set the concentricity, perpendicularity, etc. of the shafts at this time within the allowable value of the elastic coupling to be used.
(3) When mounting a pulley or the like, ensure it is within the range of allowable shaft load (see page A-53).

ZKB-XN
powder brake

100 200 400

Natural cooling type | Forced air cooling type

Rated torque: 100 to 400 (N·m)
Natural cooling/forced air cooling protruding shaft type
Available from 5 r/min
The heat capacity is increased by blowing air into the air gap.

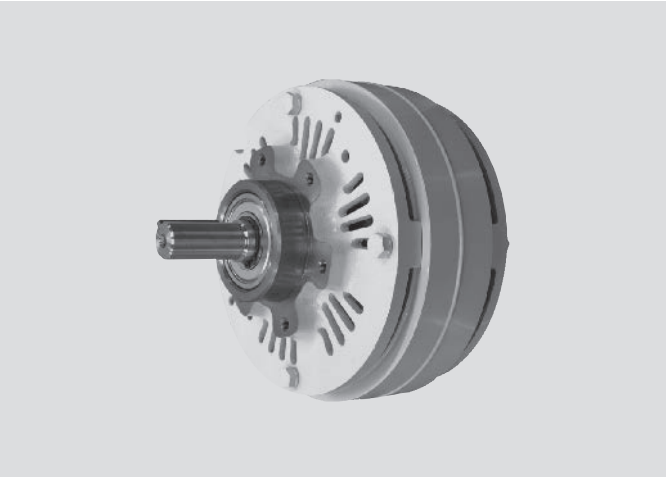

Specifications

(Rated voltage: 24 V DC)

Model name	Rated torque (N·m)	Coil (75°C)			Moment of inertia *J* (kgm^2)	Forced air cooling allowable continuous heat dissipation (slip rate)*			Allowable rotational speed (r/min)	Weight (kg)	Powder weight (g)
		Current (A)	Power (W)	Time constant (s)		Wind pressure (Pa)	Air volume (m^3/min)	Power (W)			
ZKB-10XN	100	2.4	57.6	0.25	3.50×10^{-2}	6×10^{4}	1.1	1100	1800	34	140
ZKB-20XN	200	2.7	64.8	0.37	9.15×10^{-2}	5×10^{4}	1.6	1900	1800	53	225
ZKB-40XN	400	3.5	84	0.40	2.40×10^{-1}	2×10^{5}	2.0	2800	1800	100	370

Notes: 1. *: For the cooling air, be sure to use clean dry air passed through an air filter (complete oil removal type).
2. The idling torque is 1% or less of the rated torque.

Outline dimensions (mm)

ZKB-10XN, 20XN

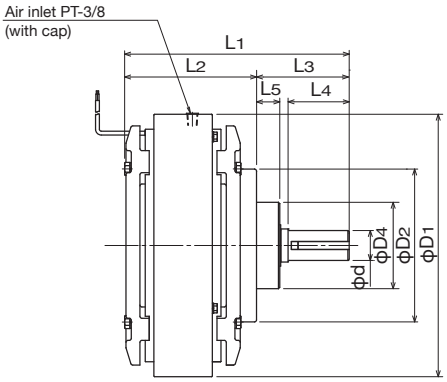

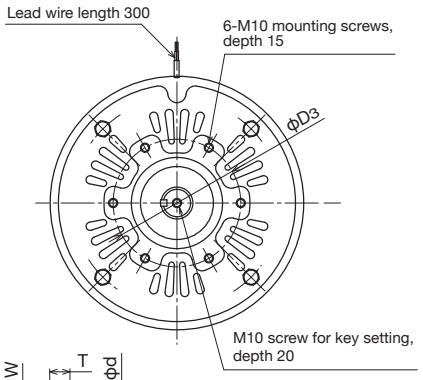

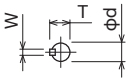

Key part dimensions

ZKB-40XN

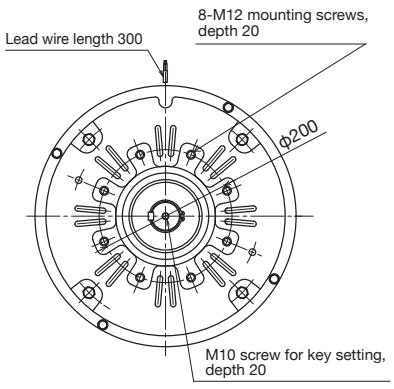

(Paint color Munsell 10Y 7.5/1)

Model name	L1	L2	L3	L4	L5	D1	D2	D3	D4 (g7)	Key part		
										d (h7)	W (p7)	T $(^{0}_{-0.2})$
ZKB-10XN	239	139	100	65	28	278	160	140	100	30	7	33
ZKB-20XN	278	169	109	69	30	327	174	150	110	35	10	38.5
ZKB-40XN	338	198.5	139.5	92	35	395	230	200	130	45	12	48.5

Characteristics

● Standard torque characteristics (typical example)

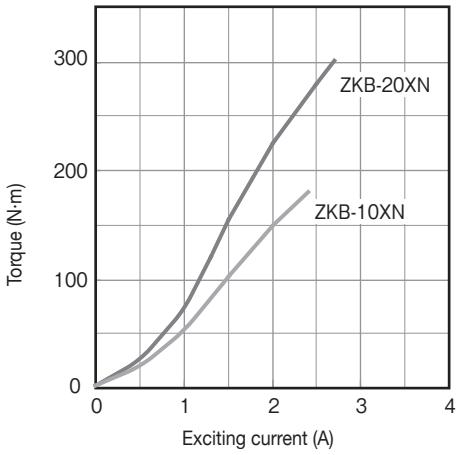

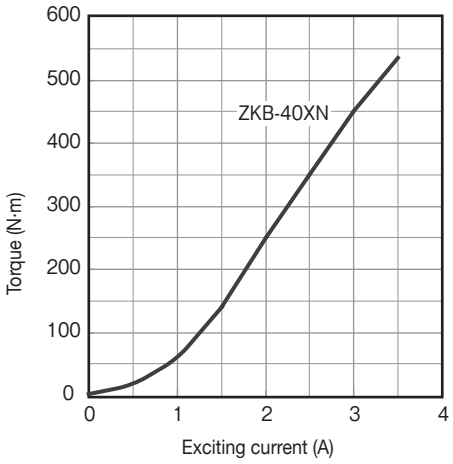

● Allowable continuous heat dissipation characteristics
(at natural cooling)

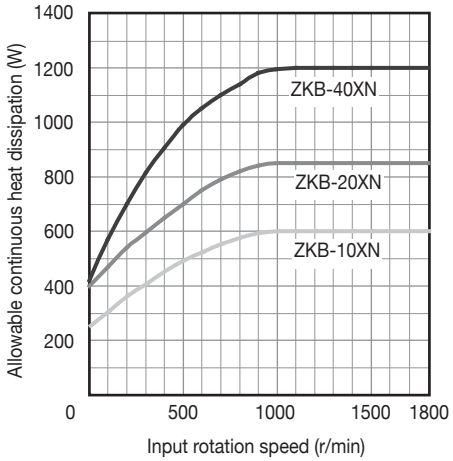

● Allowable continuous slip torque characteristics
(at natural cooling)

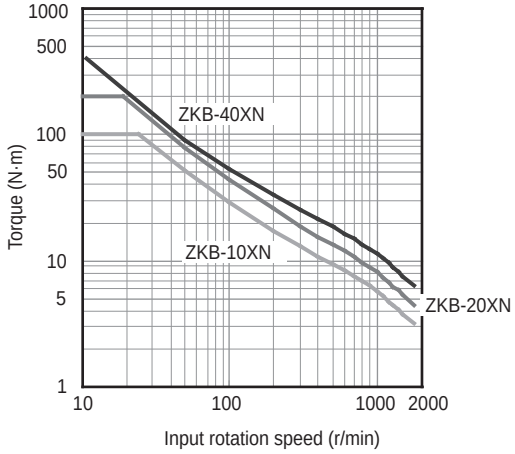

Mounting example

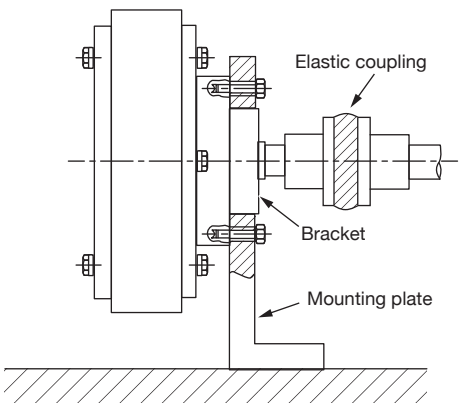

(1) Fasten the fitting part of the bracket to the mounting plate and fix it.
(2) Always use an elastic coupling to connect the brake shaft and load shaft, and set the concentricity, perpendicularity, etc. of the shafts at this time within the allowable value of the elastic coupling to be used.
(3) When mounting a pulley or the like, ensure it is within the range of allowable shaft load (see page A-53).

ZKB-HBN
powder brake

25 50 100 200 400

Thermoblock cooling

Rated torque: 25 to 400 (N·m)
Thermoblock cooling protruding shaft type
Heat capacity increased by fixing a thermoblock for a driven member and by including an axial flow fan
Available from 5 r/min

Specifications

(Rated voltage: 24 V DC)

Model name	Rated torque (N·m)	Coil (75°C)			Moment of inertia J (kgm^2)	Allowable rotational speed (r/min)	Weight (kg)	Powder weight (g)	Axial flow fan					
		Current (A)	Power (W)	Time constant (s)					Voltage V AC	Power consumption (W)		Current (A)		Quantity
										50 Hz	60 Hz	50 Hz	60 Hz	
ZKB-2.5HBN	25	1.24	29.8	0.12	3.80×10^{-3}	1800	11	33	200	43	40	0.29	0.25	1
ZKB-5HBN	50	2.15	51.5	0.13	9.60×10^{-3}	1800	16.5	65	200	43	40	0.29	0.25	1
ZKB-10HBN	100	2.4	57.6	0.25	3.50×10^{-2}	1800	37	125	200	43	40	0.29	0.25	1
ZKB-20HBN	200	2.7	64.8	0.37	9.15×10^{-2}	1800	59	205	200	43	40	0.29	0.25	2
ZKB-40HBN	400	3.5	84	0.40	2.40×10^{-1}	1800	110	370	200	75	95	0.4	0.5	1

Notes: 1. The idling torque is 1% or less of the rated torque.
2. The axial flow fan specifications of ZKB-20HBN show the numerical values per axial flow fan.

● Thermal switch specifications

Operation temperature	100°C (80°C for ZKB-40HBN)
Contact allowable rating	120 V AC 5A/240 V AC 3A (resistive load)
Contact	Normally closed contact

Note: The operation temperature is set as an ambient temperature of 30°C.

Outline dimensions (mm)

ZKB-2.5, 5HBN

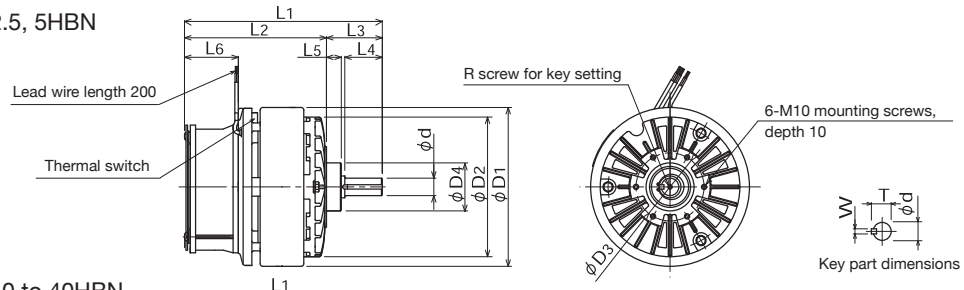

Lead wire display correspondence table

	Mark	Lead wire color
Axial flow fan	200	Gray*
Thermal switch	T	Blue
Powder brake	BR	Black

* Black for only ZKB-40HBN

ZKB-10 to 40HBN

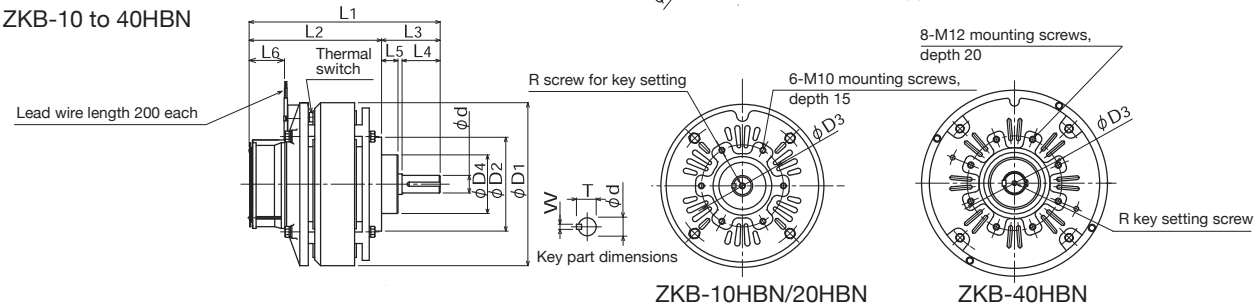

ZKB-10HBN/20HBN ZKB-40HBN

(Paint color Munsell 10Y 7.5/1)

Model name	L1	L2	L3	L4	L5	L6	D1	D2	D3	D4 (g7)	R		Key part		
											Diameter	Depth	d (h7)	W (p7)	T ($^{0}_{-0.2}$)
ZKB-2.5HBN	227	163	64	43	17	62	182	160	78	55	M5	10	20	5	22
ZKB-5HBN	265	174	91	55	30	62	219	196	100	74	M6	12	25	7	28
ZKB-10HBN	326	226	100	65	28	62	278	160	140	100	M10	20	30	7	33
ZKB-20HBN	366	257	109	69	30	62	327	174	150	110	M10	20	35	10	38.5
ZKB-40HBN	473	333.5	139.5	92	35	98	395	230	200	130	M10	20	45	12	48.5

Characteristics

● Standard torque characteristics (typical example)

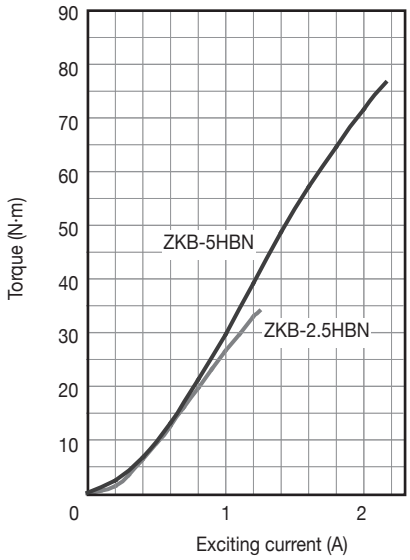

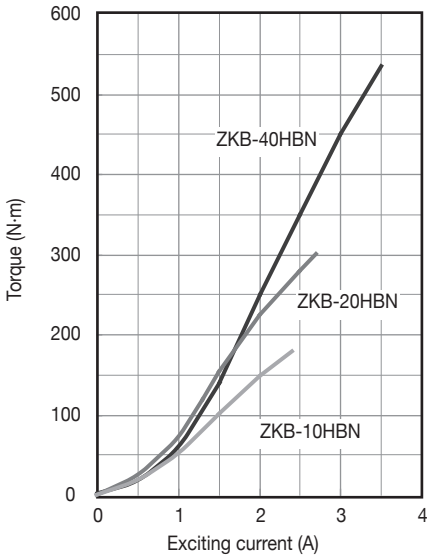

● Allowable continuous heat dissipation characteristics

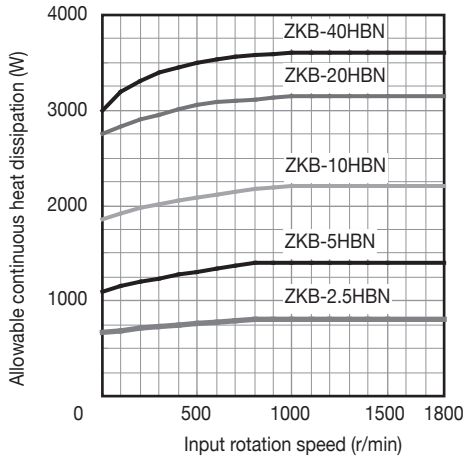

● Allowable continuous slip torque characteristics

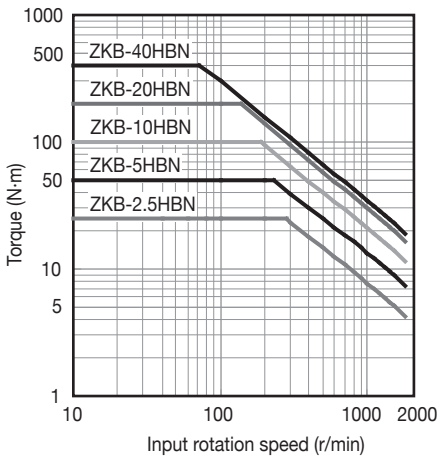

Mounting example

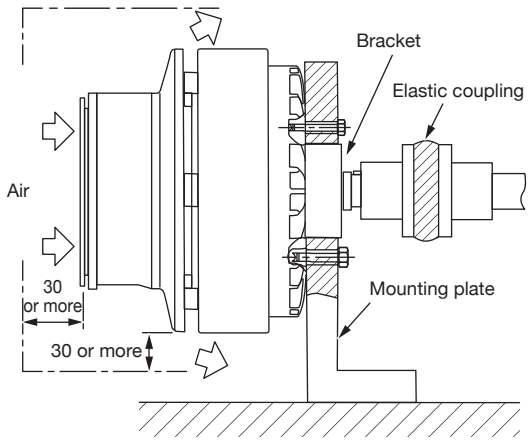

(1) Fasten the fitting part of the bracket to the mounting plate and fix it.
(2) Always use an elastic coupling to connect the brake shaft and load shaft, and set the concentricity, perpendicularity, etc. of the shafts at this time within the allowable value of the elastic coupling to be used.
(3) When mounting a pulley or the like, ensure it is within the range of allowable shaft load (see page A-53).
(4) Provide space (30 mm or more) near the brake so as not to block the cooling wind.
(5) If the axial flow fan is stopped or the cover is clogged, the inside of the brake may become hot and cause burnout. For this reason, be sure to connect the thermal switch to provide a protection circuit.
(6) Since the brake is the open type, when using it in a place with a lot of dust, arrange a duct to convey clean air.

ZKB-WN
powder brake

25 50

Water cooling type

Rated torque: 25 to 50 (N·m)
Water cooling protruding shaft type
Available from 5 r/min
Heat capacity increased using water cooling by providing a water channel in the driven member

Specifications

(Rated voltage: 24 V DC)

Model name	Rated torque (N·m)	Coil (75°C)			Moment of inertia J (kgm^2)	Amount of cooling water (L/min)	Allowable rotational speed (r/min)	Weight (kg)	Powder weight (g)
		Current (A)	Power (W)	Time constant (s)					
ZKB-2.5WN	25	1.24	30	0.12	3.80×10^{-3}	1.5	1800	9	33
ZKB-5WN	50	2.15	51.5	0.13	9.50×10^{-3}	3.0	1800	14.5	65

Note: The idling torque is 1% or less of the rated torque.

Outline dimensions (mm)

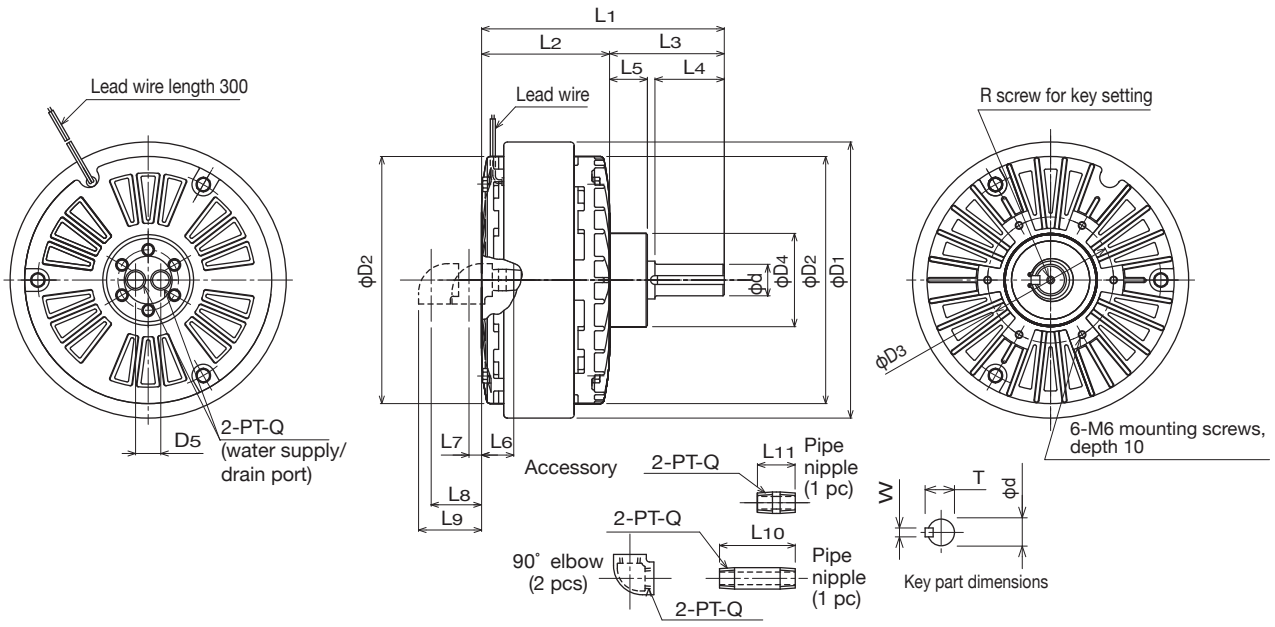

(Paint color Munsell 10Y 7.5/1)

Model name	L1	L2	L3	L4	L5	L6	L7	L8	L9	L10	L11	D1	D2	D3	D4 (g7)	D5	Q	R		Key part		
																		Diameter	Depth	d (h7)	W (p7)	T $(^{0}_{-0.2})$
ZKB-2.5WN	155	91	64	43	17	19	15	41	50	51	25	182	160	78	55	16	1/8	M5	10	20	5	22
ZKB-5WN	193	102	91	55	30	25	10	40	50	60	30	219	196	100	74	20	1/4	M6	12	25	7	28

Characteristics

● Standard torque characteristics (typical example)

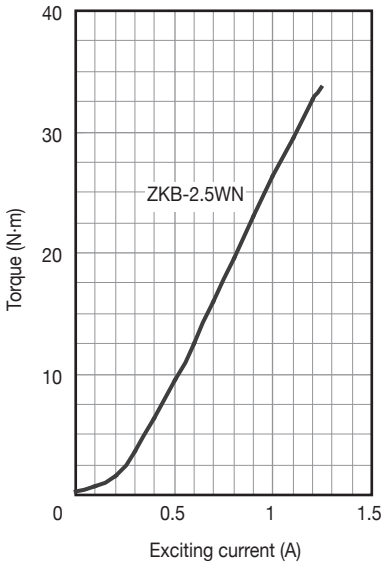

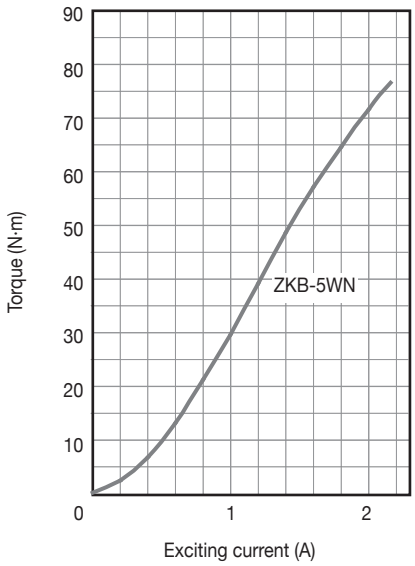

● Allowable continuous heat dissipation characteristics

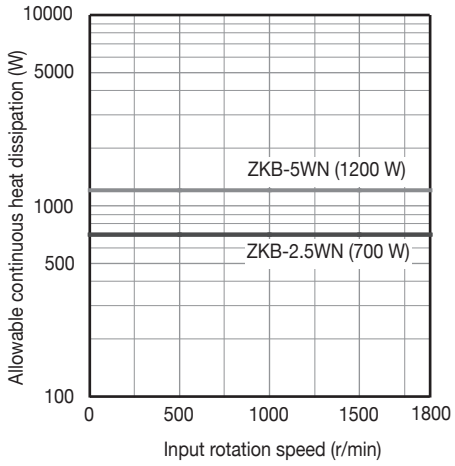

● Allowable continuous slip torque characteristics

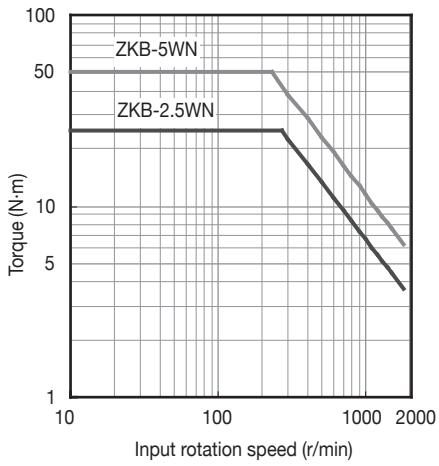

Mounting example

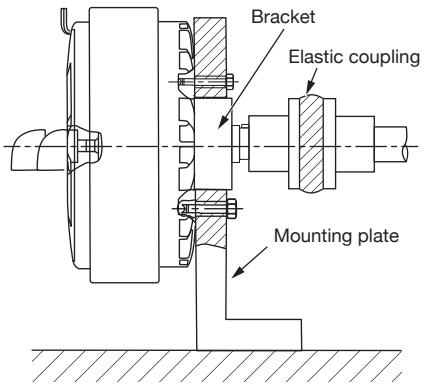

(1) Fasten the fitting part of the bracket to the mounting plate and fix it.
(2) Always use an elastic coupling to connect the brake shaft and load shaft, and set the concentricity, perpendicularity, etc. of the shafts at this time within the allowable value of the elastic coupling to be used.
(3) When mounting a pulley or the like, ensure it is within the range of allowable shaft load (see page A-53).
(4) In principle, cooling water containing anti-corrosive agent should be circulated in the order shown below. In case of using water other than the water supply in the water discharge method, provide a strainer (filter) in the feed-water inlet.

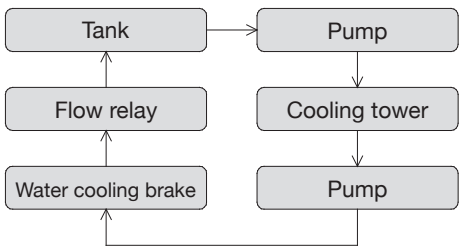

(5) Provide a protection circuit (flow relay) so that the brake always stops rotation when the cooling water is cut off.

ZKB-WN
powder brake

100 200 400

Water cooling type

Rated torque: 100 to 400 (N·m)
Water cooling protruding shaft type
Available from 5 r/min
Heat capacity increased using water cooling by providing a water channel in the driven member

Specifications

(Rated voltage: 24 V DC)

Model name	Rated torque (N·m)	Coil (75°C)			Moment of inertia J (kgm^2)	Amount of cooling water (L/min)	Allowable rotational speed (r/min)	Weight (kg)	Powder weight (g)
		Current (A)	Power (W)	Time constant (s)					
ZKB-10WN	100	2.4	57.6	0.25	3.50×10^{-2}	6	1800	34	140
ZKB-20WN	200	2.7	64.8	0.37	9.15×10^{-2}	9	1800	53	225
ZKB-40WN	400	3.5	84	0.40	2.40×10^{-1}	15	1800	98	370

Note: The idling torque is 1% or less of the rated torque.

● Thermal switch specifications

Operation temperature	105°C
Contact allowable rating	24 V DC, 18 A/115 V AC, 18 A/230 V AC, 13 A
Contact	Normally closed contact

Note: Default equipment of only ZKB-40WN

The operation temperature is set as an ambient temperature of 30°C.

Outline dimensions (mm)

ZKB-10WN, 20WN

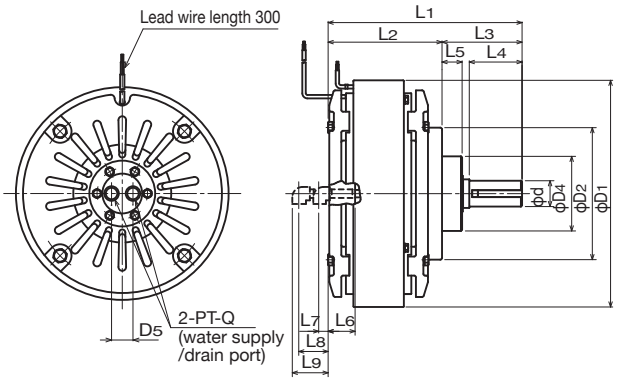

ZKB-10WN, 20WN ZKB-40WN

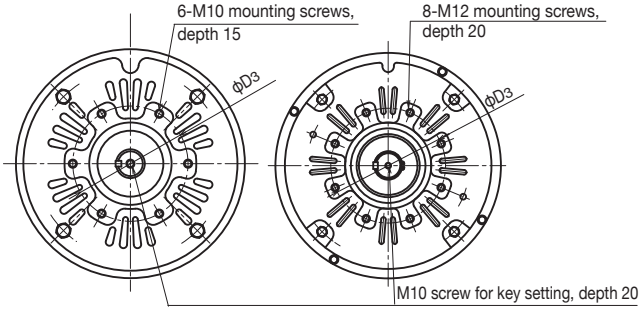

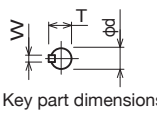

Key part dimensions

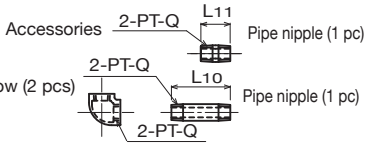

Lead wire display correspondence table (ZKB-40WN only)

	Mark	Lead wire length
Thermal switch	T	Approx. 30
Powder brake	BR	300

(Paint color Munsell 10Y 7.5/1)

Model name	L1	L2	L3	L4	L5	L6	L7	L8	L9	L10	L11	D1	D2	D3	D4 (g7)	D5	Q	Key part		
																		d (h7)	W (p7)	T $(^{0}_{-0.2})$
ZKB-10WN	239	139	100	65	28	29	21	60	74	75	40	278	160	140	100	28	3/8	30	7	33
ZKB-20WN	278	169	109	69	30	34	27	66	80	90	50	327	174	150	110	32	1/2	35	10	38.5
ZKB-40WN	338	198.5	139.5	92	35	45	16	55	69	90	50	395	230	200	130	32	1/2	45	12	48.5

Characteristics

● Standard torque characteristics (typical example)

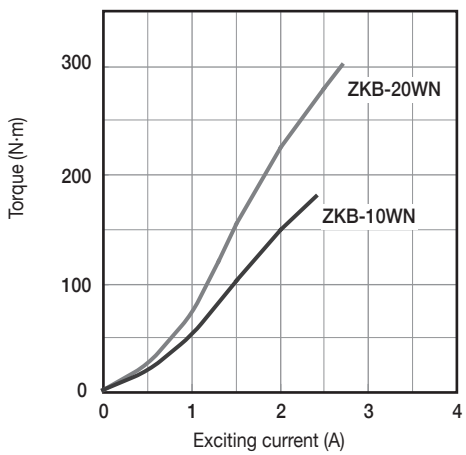

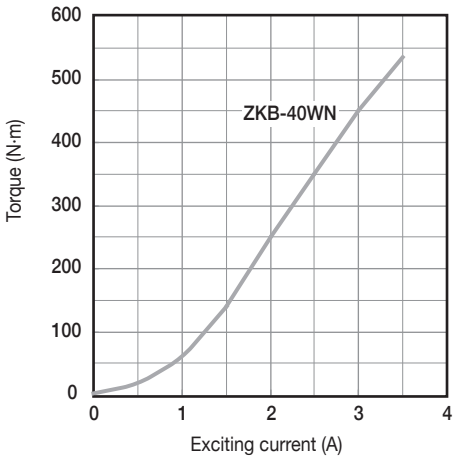

● Allowable continuous heat dissipation characteristics

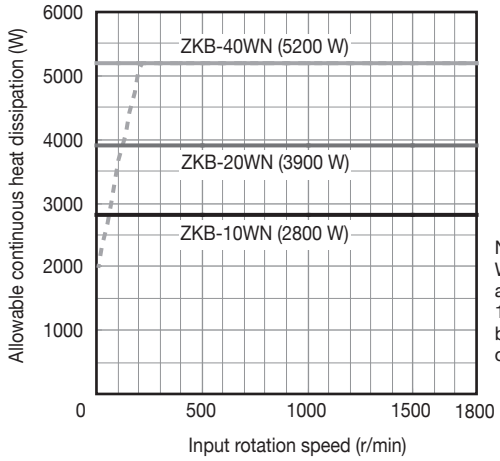

Note:
When using ZKB-40WN at a constant speed of 170 r/min or less, use it below the curve of the dotted line.

● Allowable continuous slip torque characteristics

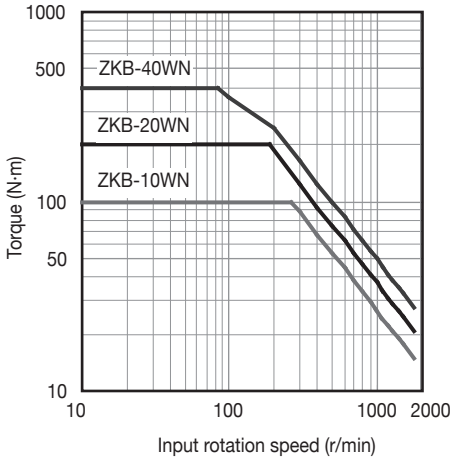

Mounting example

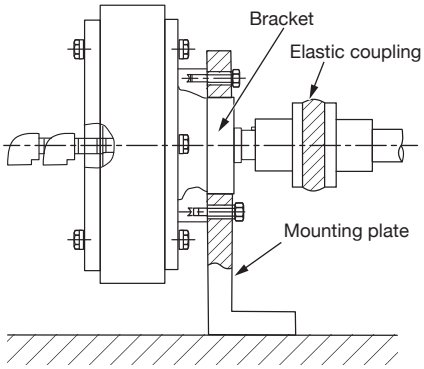

(1) Fasten the fitting part of the bracket to the mounting plate and fix it.
(2) Always use an elastic coupling to connect the brake shaft and load shaft, and set the concentricity, perpendicularity, etc. of the shafts at this time within the allowable value of the elastic coupling to be used.
(3) When mounting a pulley or the like, ensure it is within the range of allowable shaft load (see page A-53).
(4) In principle, cooling water containing anti-corrosive agent should be circulated in the order shown below. In case of using water other than the water supply in the water discharge method, provide a strainer (filter) in the feed-water inlet.

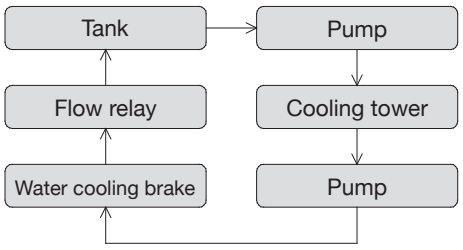

(5) Provide a protection circuit (flow relay) so that the brake always stops rotation when the cooling water is cut off.
The ZKB-40WN is equipped with an overheat-time open type (normally closed contact) thermal switch.

ZA-Y
powder brake

6 12 25 50

Natural cooling type

Rated torque: 6 to 50 (N·m)
Natural cooling through-shaft type
Available from 15 r/min
Heat capacity increased by rotating the periphery to improve heat dissipation

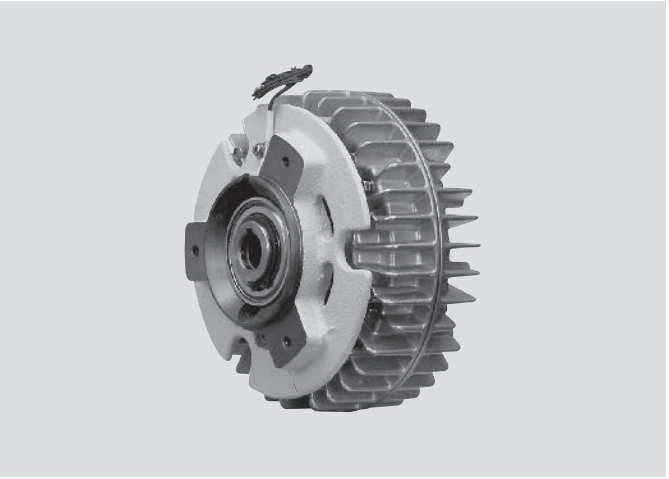

Specifications

(Rated voltage: 24 V DC)

Model name	Rated torque (N·m)	Coil (75°C)			Moment of inertia J (kgm^2)	Allowable rotational speed (r/min)	Weight (kg)	Powder weight (g)
		Current (A)	Power (W)	Time constant (s)				
ZA-0.6Y	6	0.3	7.2	0.10	1.55×10^{-3}	1800	2.4	15
ZA-1.2Y1	12	0.39	9.4	0.13	5.50×10^{-3}	1800	5	25
ZA-2.5Y1	25	0.73	17.5	0.15	9.40×10^{-3}	1800	7.4	39
ZA-5Y1	50	0.94	22.6	0.17	2.30×10^{-2}	1800	11	60

Note: The idling torque of ZA-0.6Y is 5% or less of the rated torque and that of ZA-1.2Y1 and others is 3% or less of the rated torque.

Outline dimensions (mm)

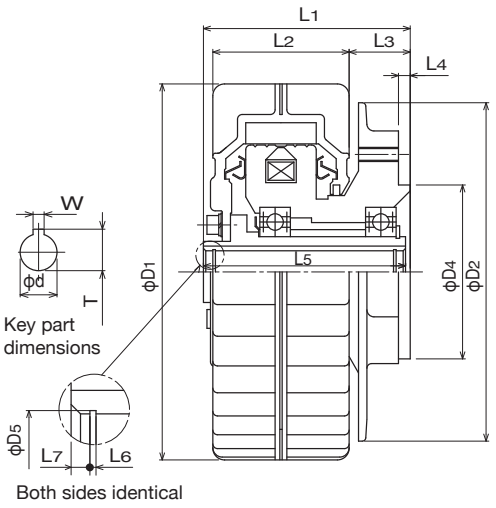

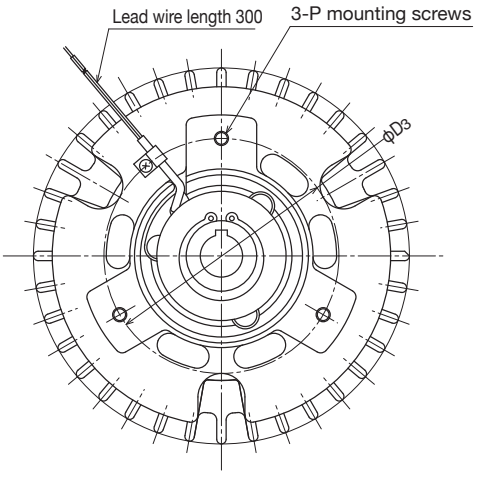

Model name	L1	L2	L3	L4	L5	L6	L7	D1	D2	D3	D4 (g7)	D5	P		Key part		
													Diameter	Depth	d (H7)	W (F8)	T ($^{+0.2}_{0}$)
ZA-0.6Y	68	53	15	2	64	1.1	3	116	116	80	70	12.5	M5	12	12	4	13.5
ZA-1.2Y1	88	58	26	5	86	1.1	4	160	144	100	74	19	M6	17	18	5	20
ZA-2.5Y1	100	66	28	5	92	1.1	4	180	170	140	100	21	M10	19	20	5	22
ZA-5Y1	106	74	27	5	101	1.3	5	220	195	150	110	31.4	M10	19	30	7	33

Characteristics

● Standard torque characteristics (typical example)

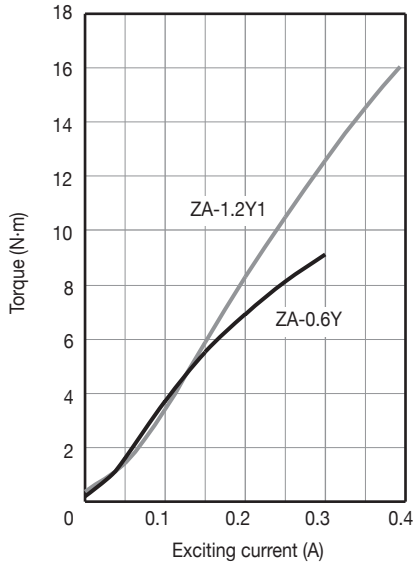

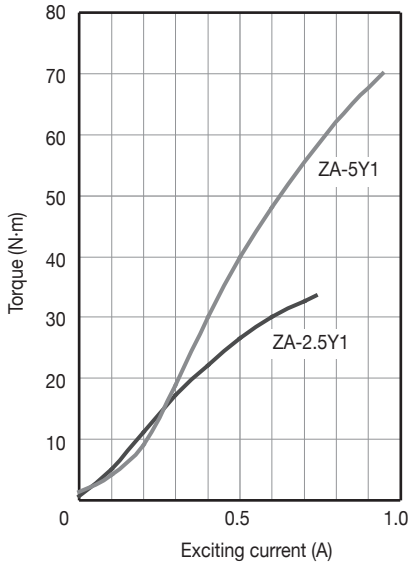

● Allowable continuous heat dissipation characteristics (at natural cooling)

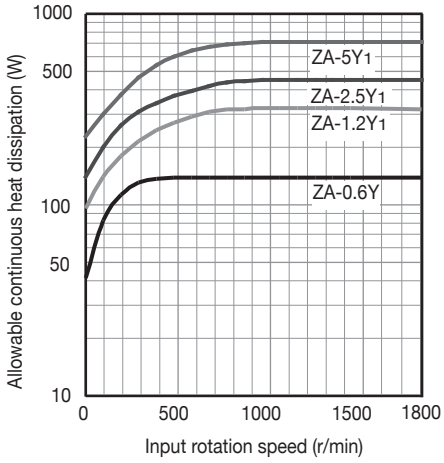

● Allowable continuous slip torque characteristics (at natural cooling)

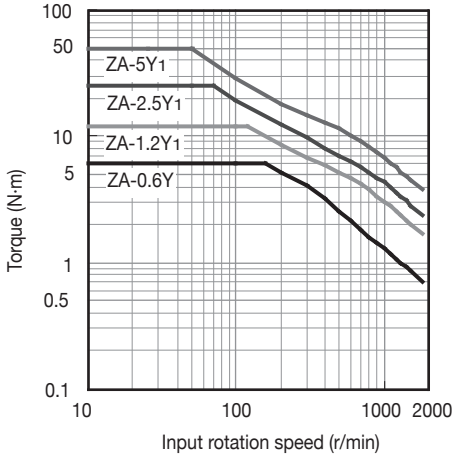

Mounting example

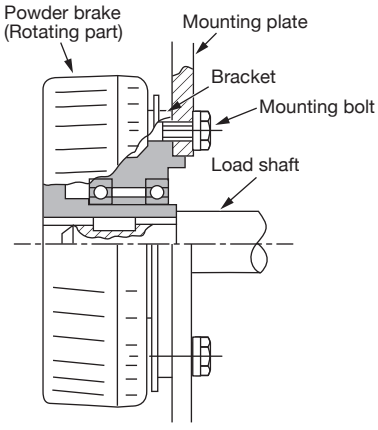

(1) Fasten the fitting part of the bracket to the mounting plate and fix it.
(2) Be careful of the length of the mounting bolt. If the mounting bolt is too long, the tip of the bolt may interfere with the rotating part.

Model name	Screw holes	Overlapping allowance of the mounting bolt (mm)
ZA-0.6Y	3-M5×12	8-11
ZA-1.2Y1	3-M6×17	9-16
ZA-2.5Y1	3-M10×19	15-18
ZA-5Y1	3-M10×19	15-18

(3) Set the concentricity between the brake side threading shaft and the load shaft to 0.05 mm or less.
(4) Since the outer periphery rotates, be sure to cover the whole body with a wire mesh or the like with good ventilation.

ZA-Y
powder brake

100 200 400

Natural cooling type

Rated torque: 100 to 400 (N·m)
Natural cooling through-shaft type
Available from 15 r/min
Heat capacity increased by rotating the periphery to improve heat dissipation

Specifications

(Rated voltage: 24 V DC)

Model name	Rated torque (N·m)	Coil (75°C)			Moment of inertia J (kgm^2)	Allowable rotational speed (r/min)	Weight (kg)	Powder weight (g)
		Current (A)	Power (W)	Time constant (s)				
ZA-10Y1	100	1.21	28.8	0.3	6.60×10^{-2}	1800	22	105
ZA-20Y1	200	1.9	45.6	0.6	2.00×10^{-1}	1000	40	235
ZA-40Y	400	2.2	52.8	0.6	4.63×10^{-1}	1000	64	520

Note: The idling torque is 3% or less of the rated torque.

Outline dimensions (mm)

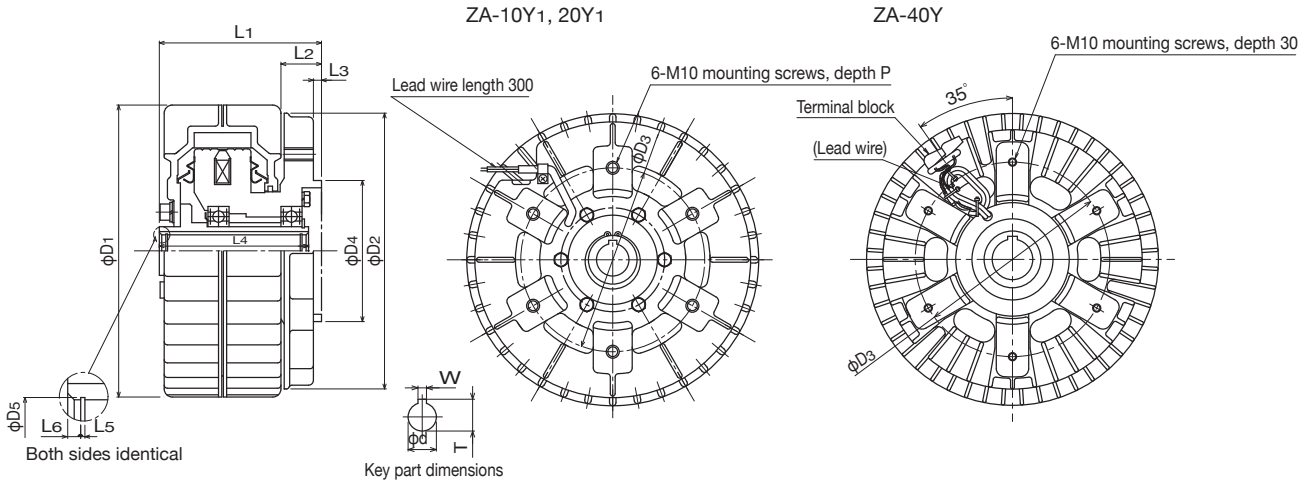

Model name	L1	L2	L3	L4	L5	L6	D1	D2	D3	D4 (g7)	D5	P	Key part		
												Depth	d (H7)	W (F8)	T ($^{+0.2}_{0}$)
ZA-10Y1	140	29	5	130	1.65	5	275	250	150	110	37	22	35	10	38.5
ZA-20Y1	160	42	6	152	-	-	335	320	240	160	-	30	45	12	49
ZA-40Y	210	41	6	202	-	-	360	320	240	160	-	30	50	12	53.5

Characteristics

● Standard torque characteristics (typical example)

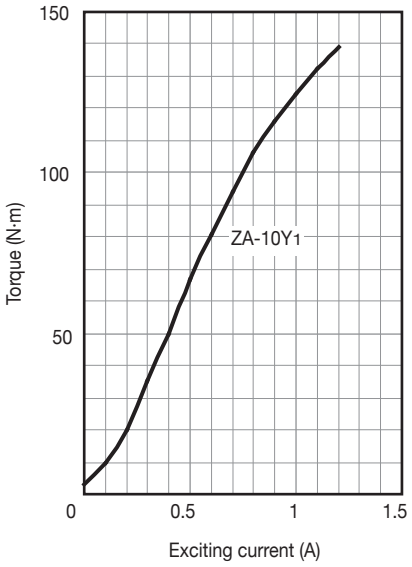

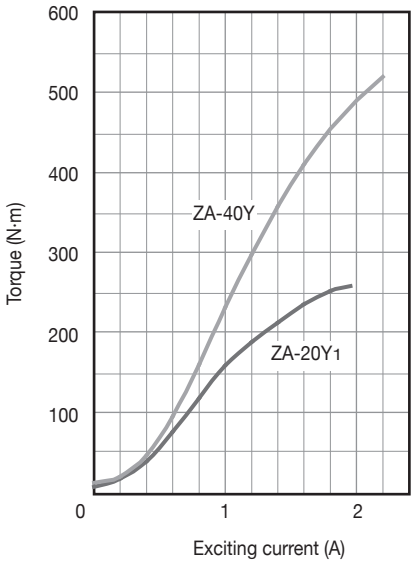

● Allowable continuous heat dissipation characteristics

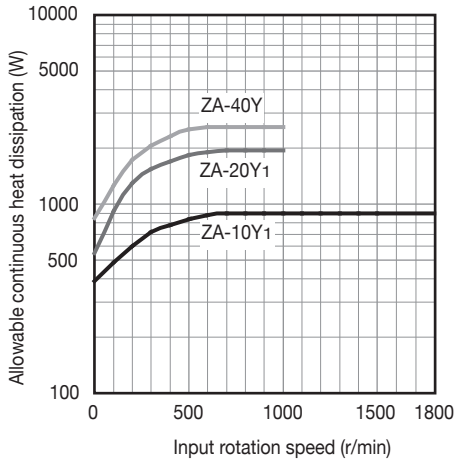

● Allowable continuous slip torque characteristics

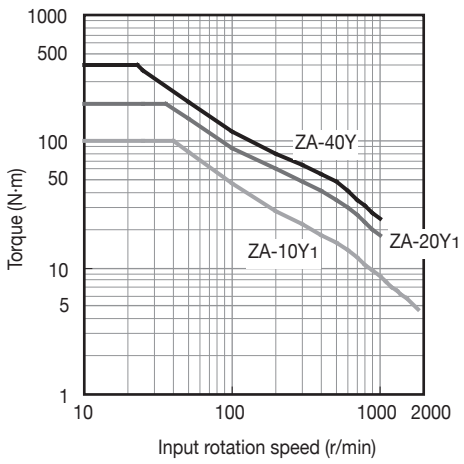

Mounting example

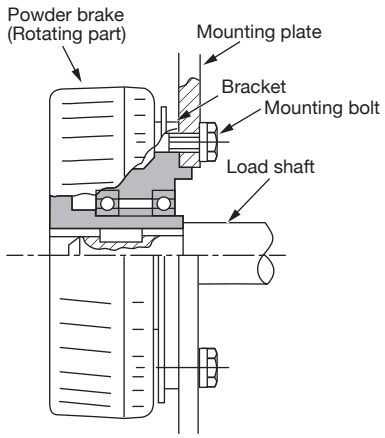

(1) Fasten the fitting part of the bracket to the mounting plate and fix it.
(2) Be careful of the length of the mounting bolt. If the mounting bolt is too long, the tip of the bolt may interfere with the rotating part.

Model name	Screw holes	overlapping allowance of the mounting bolt (mm)
ZA-10Y1	6-M10×22	15-21
ZA-20Y1	6-M10×30	15-29
ZA-40Y	6-M10×30	15-29

(3) Set the concentricity between the brake side threading shaft and the load shaft to 0.05 mm or less.
(4) Since the outer periphery rotates, be sure to cover the whole body with a wire mesh or the like with good ventilation.

ZX-YN
powder brake

3 6 12

Natural cooling type

Rated torque: 3 to 12 (N·m)
Natural cooling through-shaft type
Ultra-thin type
Available from 5 r/min

Specifications

Model name	Rated torque (N·m)	Coil (75°C)				Moment of inertia J (kgm^2)	Allowable rotational speed (r/min)	Weight (kg)	Combination power supply
		Voltage (V)	Current (A)	Power (W)	Time constant (s)				
ZX-0.3YN-24	3	24	0.4	9.6	0.035	3.5×10^{-5}	400	1.1	24 V DC power supply unit
ZX-0.6YN-24	6	24	0.4	9.6	0.050	9.0×10^{-5}		1.8	24 V DC power supply unit
ZX-1.2YN-24	12	24	0.5	12	0.070	1.6×10^{-4}		2.3	24 V DC power supply unit

Note: The idling torque is 10% or less of the rated torque.

Outline dimensions (mm)

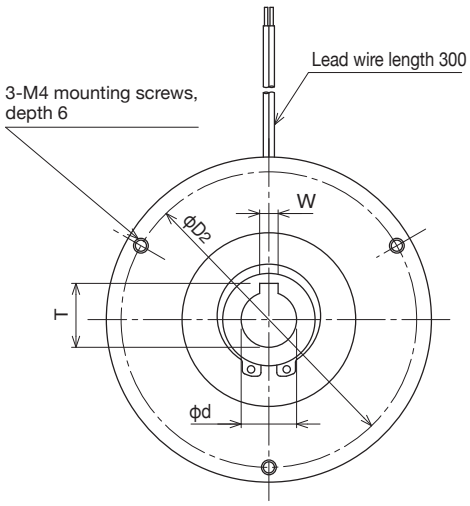

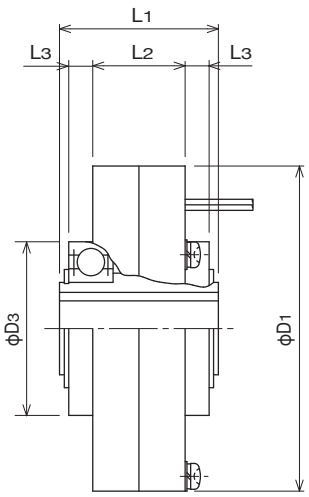

(Paint color Munsell 10Y 7.5/1)

Model name	L1	L2	L3	D1	D2	D3 (h5)	Key part		
							d (H7)	W (Js9)	T $(^{+0.2}_{0})$
ZX-0.3YN-24	43	25	6.5	88	80	47	15	5	17.3
ZX-0.6YN-24	49	30	6.5	105	97	55	20	6	22.8
ZX-1.2YN-24	50	30	7	118	110	62	25	8	28.3

Characteristics

● Standard torque characteristics (typical example)

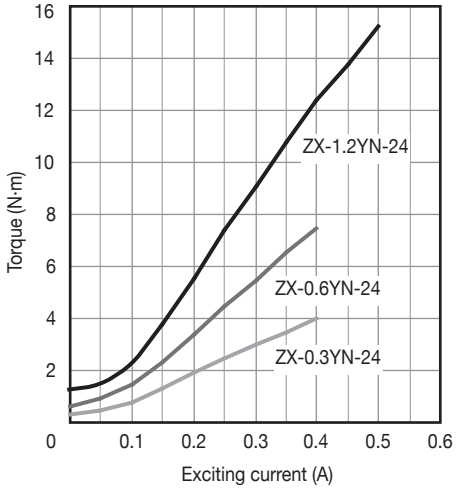

● Allowable continuous heat dissipation characteristics

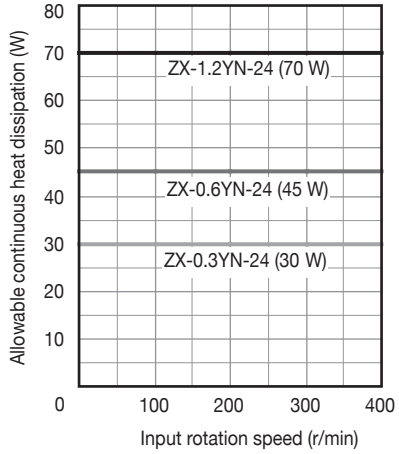

● Allowable continuous slip torque characteristics

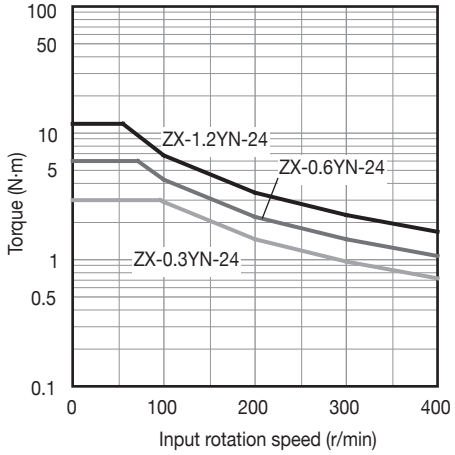

Mounting example

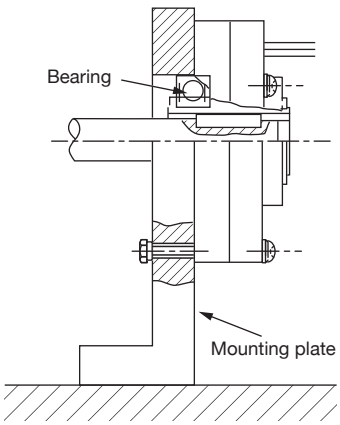

(1) Fasten the fitting part of the bearings to the mounting plate and fix it.
(2) Always use an elastic coupling to connect the brake-side threading shaft and load shaft, and set the concentricity, perpendicularity, etc. of the shafts at this time within the allowable value of the elastic coupling to be used.
(3) When supporting the load shaft with built-in bearings, be careful not to implement 3-point support. (The brake has 2 built-in bearings.)

Selection

■ When used in continuous slip condition

Normally, the powder clutch/brake are used in the continuous slip condition. The heat dissipation P (heat generation due to slip) in this case is expressed by the following equation.

$$P = 0.105 \times T \times Nr \ (W) \ ... \ (1)$$

where,

Nr: Slip rotation speed (r/min)

T: Transmission torque (N·m)

Select the model of the clutch/brake so that the heat dissipation obtained by equation (1) is within the allowable continuous heat dissipation. If the allowable continuous heat dissipation is insufficient with natural cooling, forced cooling is required. When the clutch/brake is used in continuous slip, the size of the clutch/brake is often determined by the heat dissipation, and the operating torque may be very small compared to the rated torque of the clutch/brake. In such a case, appropriate selection can be performed by using a proper deceleration device and changing the operating torque to the range where it can be easily controlled.

■ Selection of powder clutch/brake for tension control

1. Machine specifications and selection calculation

Fig. 1 on page A-44 shows the flow chart for selecting the powder clutch/brake capacity when using it as a typical usage example for tension control.

When selecting a model, it is necessary to consider the 3 points of (1) torque, (2) rotational speed, and (3) heat dissipation (heat generation due to slip). These points are calculated from the machine specifications (tension, line speed, and reel diameter or roll diameter) by the following formula.

(1) Torque $$T = F \times \frac{D}{2} \ (N \cdot m) \quad \cdots\cdots\cdots\cdots\cdots\cdots (2)$$

(2) Rotation speed $$Nr = \frac{V}{\pi \times D} \ (r/min) \quad \cdots\cdots\cdots\cdots\cdots\cdots (3)$$

(3) Heat dissipation $$P = 0.105 \times T \times Nr \ (W) \cdots\cdots\cdots\cdots\cdots\cdots (4)$$

where,

F: Tension (N)

D: Raw web reel diameter or roll diameter (m)

V: Line speed (m/min)

Nr: Slip rotation speed (r/min) of powder clutch/brake

(This is the slip difference between the input and the output rotation speeds for the powder clutch, and the input rotation speed for the powder brake.)

Based on these calculation results, select the powder clutch/brake according to the flow shown in Fig. 1 on page A-44.

2. Points of selection and points to be noted

(1) Torque

Calculate the maximum and minimum values of torque and check whether they are within the controllable range. The torque controllable range of the powder clutch/brake is from the rated torque to the range of the idling torque of the product. (Because there is a torque loss of the bearing and seal inside the product, even if the exciting current is set to 0 A, the torque does not become 0 N·m. This idling torque, which is usually approx. 2% of the rated torque, depends on the product, so refer to the specification column of each model for actual selection.)

The controllable range is from idling torque to 100% of the rated torque, but using it within the range as close to the rated torque as possible can obtain better controllability. In particular, when the control unit uses an open loop system such as a reel diameter detection type or a manual type, it is recommended to use it in a range of 5 to 100%, which excels in linearity of the exciting current-torque characteristics.

(2) Rotation speed

Both the powder clutch/brake must have a maximum rotation speed less than the allowable rotation speed. Also, the powder brake must have a minimum rotation speed of 15 r/min or more, and the powder clutch must have a rotation speed difference of 15 r/min or more between the input and output (that is, both the powder clutch/brake also require a slip rotation speed of 15 r/min or more).

If the rotation speed is low and a sufficient slip rotation speed cannot be secured for unwinding of a machine with a slow line speed, use a powder clutch rather than a powder brake and secure slip rotation speeds by applying rotation in the direction opposite to the direction of rotation of the unwinding reel using a geared motor or the like. (ZKB-N series, ZKG-N series, and ZX-YN series can be used from 5 r/min or more.)

(3) Heat dissipation (heat generation)

The heating value per unit time generated when the powder clutch/brake slips is called heat dissipation. In tension control, the powder clutch/brake is used in the continuous slip state and therefore the temperature of the powder clutch/brake body is increased by the slip heat. The heat dissipation (heat generation) during operation needs to be suppressed below the allowable continuous heat dissipation of the operating model.

3. When an unwinding powder brake is used

Assuming that the gear ratio of the unwinding reel and brake shaft is 1 (direct connection),

Slip rotation speed = rotation speed of unwinding reel

Therefore, the formula for calculating the heat dissipation (heat generation) is as follows:

$$P = 0.105 \times T \times Nr = 0.105 \times \left(F \times \frac{D}{2}\right) \times \left(\frac{V}{\pi \times D}\right) = 0.0167 \times F \times V \quad \cdots\cdots\cdots(5)$$

The heat dissipation (heat generation) is determined by the machine tension and line speed and is not affected by the reel diameter.

4. When an winding powder clutch is used

Assuming that the gear ratio of the winding reel and clutch shaft is 1 (direct connection),

Slip rotation speed = powder clutch input rotation speed - rotation speed of winding reel

Normally, the input rotation speed of the powder clutch is set to a constant rotation speed of 15 r/min or more than the maximum rotation speed of the winding reel. The heat dissipation (heat generation) is also changed by the change of the reel diameter (rotation speed of the winding reel). So, the maximum heat dissipation during operation is calculated by the following formula.

$$Pmax = 0.105 \times Tmax \times Nrmax = 0.105 \times Tmax \times (Ni - Nmin) \cdots\cdots\cdots\cdots\cdots\cdots(6)$$

where,
Pmax: Maximum heat dissipation (W)
Tmax: Maximum torque (N·m)
Nrmax: Maximum slip rotation speed (r/min)
Ni: Clutch input rotational speed (r/min)
Nmin: Minimum rotational speed (r/min)

The torque and slip rotation speed become maximum at the end of winding, and the heat dissipation (heat generation) at this time becomes the maximum.
(Note: In the taper tension control, the tension at the end of winding may decrease greatly compared with the tension at the start of winding. In this case, the heat dissipation may become maximum during winding, not at the end of winding.)

■ Introduction of selection tool

For the selection tool, consult your local Mitsubishi Electric representative.

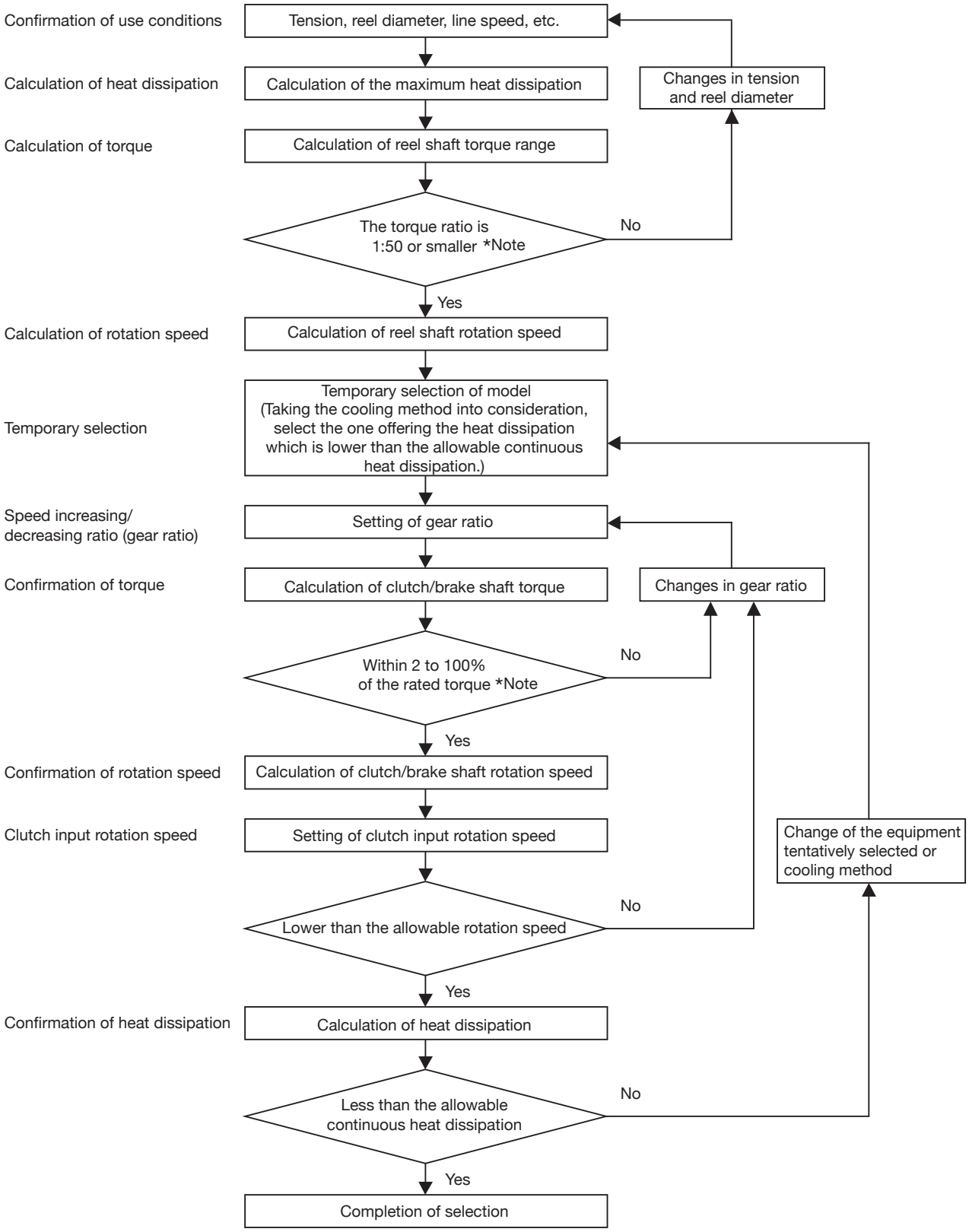

* Note: The allowable torque control range varies depending on the model.
Please see the specifications section of each model for details.

Fig. 1 Powder clutch/brake selection flow chart

■ Sample calculation

Winding or unwinding is performed in 2 modes, one is constant tension winding to wind up with constant tension, and the other is taper tension winding to wind up strongly at first and gently at the end. These modes can be realized by using the torque controllability or constant torque characteristics of the powder clutch/brake.
There are 3 ways to realize them: unwinding side brake, idling roll clutch/brake, and winding side clutch.
The torque controllable range is from idling torque to rated torque. Since the idling torque depends on the model, refer to the specifications of each model.

1. Unwinding powder brake (1)

What kind of powder brake should be used as the unwinding side brake with the film winding machine with the following specifications?

(1) Specifications

Tension	F: 100 N constant
Unwinding roll diameter	Maximum diameter D_1: 660 mm
	Minimum diameter D_2: 110 mm
Line speed	V: 170 m/min constant

(2) Calculation

(1) Torque

Suppose the brake torques required at the beginning and end of unwinding at tension 100 N are T_1 and T_2.

$$T_1 = \frac{D_1}{2} \times F = \frac{660 \times 10^{-3}}{2} \times 100 = 33 \text{ N·m}$$

$$T_2 = \frac{D_2}{2} \times F = \frac{110 \times 10^{-3}}{2} \times 100 = 5.5 \text{ N·m}$$

(2) Rotation speed

Suppose the slip rotation speeds of the brake at the beginning and end of unwinding at a line speed of 170 m/min are N_1 and N_2.

$$N_1 = \frac{V}{\pi D_1} = \frac{170}{\pi \times 660 \times 10^{-3}} = 82 \text{ r/min}$$

$$N_2 = \frac{V}{\pi D_2} = \frac{170}{\pi \times 110 \times 10^{-3}} = 492 \text{ r/min}$$

(3) Heat dissipation

Heat dissipation P is:

$$P = 0.105 \times T \times Nr = 0.105 \times \frac{DF}{2} \times \frac{V}{\pi D}$$

$$= 0.0167 \times F \times V = 0.0167 \times 100 \times 170$$

$$= 284 \text{ W}$$

As shown above, the continuous heat dissipation of the unwinding side brake at constant line speed and constant tension becomes constant.

(4) Selection

In view of the torque (T_1, T_2) and heat dissipation (P), the ZA-5Y1 (allowable continuous heat dissipation approx. 290 W at rated torque 50 N·m and input rotation speed 82 r/min) can be used with natural cooling.
The unwinding reel and brake shaft are directly connected, and the torque usage range is 66 to 11% of the rating.

Reference:

The allowable continuous heat dissipation of natural cooling varies depending on the rotation speed of the brake, so decide whether to use one while the brake is at low rotation (N_1) when the allowable continuous heat dissipation becomes small.

2. Unwinding powder brake (2)

Next is an example of changing the gear ratio according to the tension when the torque control range is wide.

(1) Specifications

Tension	F: 130 to 520 N
Unwinding roll diameter	D: 100 to 900 mm
Line speed	V: 100 m/min constant
Manual control	

(2) Calculation

(1) As in the previous example, calculate the torque (T), rotation speed (N), and heat dissipation (P) of the unwinding reel.

$$T = \frac{D}{2} \times F = \frac{(0.1 \text{ to } 0.9)}{2} \times (130 \text{ to } 520)$$

$$= 6.5 \text{ to } 234 \text{ N·m}$$

$$N = \frac{V}{\pi D} = \frac{100}{\pi \times (0.1 \text{ to } 0.9)}$$

$$= 35.4 \text{ to } 318 \text{ r/min}$$

$$P = 0.0167 \times F \times V = 0.0167 \times 520 \times 100$$

$$= 869 \text{ W (Max.)}$$

Based on the above calculations, the ZKB-10HBN (thermoblock type) is used.

(2) Here, suppose the torque of 234 N·m is 100%, the torque obtained above is 2.8% with 6.5 N·m, and it is out of the control range (5 to 100%) in manual control.
Therefore, it is necessary to change the gear ratio according to the tension and set it to the appropriate torque range.
The branch value (Fm) of tension is determined by the following formula.

$$Fm = \sqrt{\text{Tension ratio}} \times Fmin$$

$$= \sqrt{\frac{520}{130}} \times 130 = 260 \text{ N}$$

(3) When tension is 130 to 260 N

Unwinding reel

$$Tbo = \frac{(0.1 \text{ to } 0.9)}{2} \times (130 \text{ to } 260)$$

$$= 6.5 \text{ to } 117 \text{ N·m}$$

$$Nbo = N = 35.4 \text{ to } 318 \text{ r/min}$$

Brake shaft (1.17 times increase in speed)

$$Tbr = Tbo \times \frac{1}{1.17} = 5.6 \text{ to } 100 \text{ N·m}$$

(5.6 to 100%)

$$Nbr = Nbo \times 1.17 = 41.4 \text{ to } 372 \text{ r/min}$$

$$P = 0.0167 \times F \times V = 434 \text{ W (Max.)}$$

(4) When tension is 260 to 520 N

Unwinding reel

Tbo = 13 to 234 N·m

Nbo = 35.4 to 318 r/min

Brake shaft (2.34 times increase in speed)

Tbr = 5.6 to 100 N·m

Nbr = 82.8 to 744 r/min

P = 869 W (maximum)

(5) Structure example

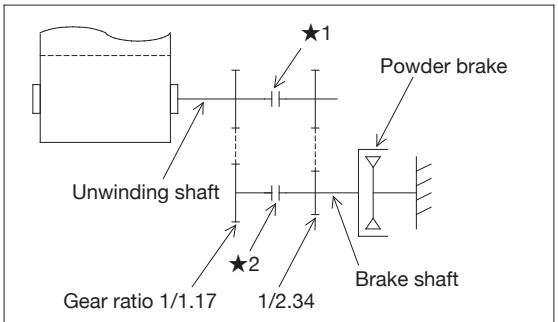

Note 1 The speed increase ratio 1.17 and 2.34 are the ones to set the maximum torque of each to be 100%.

Note 2 Since increasing the number of engagements to gain a large speed increasing (reduction) ratio lowers the transmission efficiency and makes accurate torque control difficult, set the number of engagements to one.

★1 and ★2 are electromagnetic clutches etc.,

When F = 130 to 260 N

★1: OFF ★2: ON→Gear ratio becomes $\frac{1}{1.17}$.

When F = 260 to 520 N

★1: OFF ★2: ON→Gear ratio becomes $\frac{1}{2.34}$.

3. Winding side powder clutch

(1) Specifications

Tension	F: 180 N constant
Winding roll diameter	Minimum diameter D_1: 90 mm
	Maximum diameter D_2: 540 mm
Line speed	V: 120 m/min

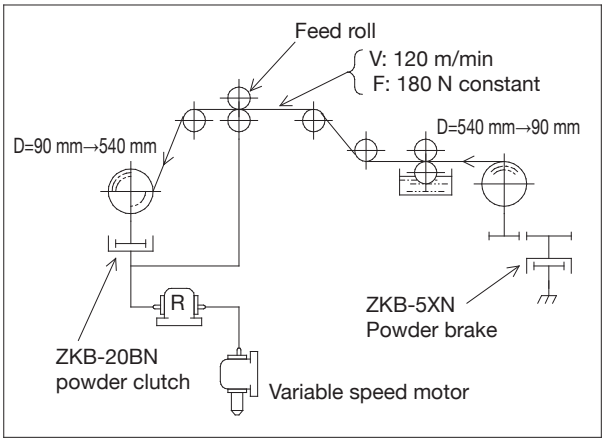

(2) Calculation

(1) Torque

Suppose the clutch torques required at the beginning and end of winding at tension 180 N are T_1 and T_2.

$$T_1 = \frac{D_1}{2} \times F = \frac{90 \times 10^{-3}}{2} \times 180 = 8.1 \text{ N·m}$$

$$T_2 = \frac{D_2}{2} \times F = \frac{540 \times 10^{-3}}{2} \times 180 = 48.6 \text{ N·m}$$

(2) Rotation speed

Suppose the rotation speeds at the beginning and end of winding at a line speed of 120 m/min are N_1 and N_2 (N_1 and N_2 are the rotation speeds of the winding reel, not the slip rotation speeds).

$$N_1 = \frac{V}{\pi D_1} = \frac{120}{\pi \times 90 \times 10^{-3}} = 425 \text{ r/min}$$

$$N_2 = \frac{V}{\pi D_2} = \frac{120}{\pi \times 540 \times 10^{-3}} = 71 \text{ r/min}$$

(3) Heat dissipation

If the input rotation speed N_0 of the clutch is made higher by 15 r/min* than the rotation speed N_1 necessary at the beginning of winding of the winding reel, the heat dissipation P_1 and P_2 of the clutch at the beginning and end of winding are as follows:

$$P1 = 0.105 \times (440 - 425) \times 8.1 = 12.8 \text{ W}$$
$$P2 = 0.105 \times (440 - 71) \times 48.6 = 1883 \text{ W}$$

As shown, when it is used as a winding clutch with constant tension, both the slip rotation speed and winding torque become maximum at the end of winding. Thus the heat dissipation also becomes maximum at the end of winding, and therefore the heat capacity of the clutch must be determined in the final state of winding. Based on the above calculation results, the model name is selected as follows.

Forced air cooling type:

ZKB-20BN (rated torque 200 N·m, allowable continuous heat dissipation 1900 W) can be used.

However, if it is directly connected to the winding reel, torque will be 5% or less of the rated torque at the beginning of winding, so use automatic control.

Examination of the unwinding side turns out as follows:

$$\begin{cases} N_1 = 425 \text{ r/min} \\ N_2 = 71 \text{ r/min} \end{cases} \quad \begin{cases} T_1 = 8.1 \text{ N·m} \\ T_2 = 48.6 \text{ N·m} \end{cases}$$

This is the same as the winding side. Heat dissipation P is:

$$P = 0.105 \times T1 \times N1 = 0.105 \times T_2 \times N_2$$
$$= 0.0167 \times F \times V = 361 \text{ W}$$

The above results show the following:

Forced air cooling type:
ZKB-5XN (rated torque 50 N·m, allowable continuous heat dissipation 700 W) can be used.

As is clear from the above calculation results, the torque operating ranges and the slip rotation speeds are not much different between the winding clutch and the unwinding brake, but the heat dissipations are significantly different. Note that, for this reason, the selected model will change. The heat dissipation on the unwinding side is constant regardless of the winding ratio (the ratio of the minimum diameter to the maximum diameter), but on the winding side the heat dissipation increases substantially in proportion to the winding ratio.

* The clutch input rotation speed N_0 was increased by 15 r/min, but normally it should be approx. 10% higher. For the brake on the unwinding side in this example, ZA-5Y_1 blower cooling, or ZKB-5HBN can be used.

4. Powder clutch for driving pinch roll

(1) Specifications

Tension F: 100 to 350 N
Roll diameter D: 200 mm
Line speed V: 45 to 90 m/min

When the decorative sheet is bonded to the plywood, the pinch roll B, with respect to the feed roll A, has a difference in circumferential speed due to a change in the rubber roll diameter by the pinch pressure conduction. To prevent the peripheral speed difference from causing roll B to slip, a powder clutch is put into the drive system of roll B to let the slipping occur in the clutch.

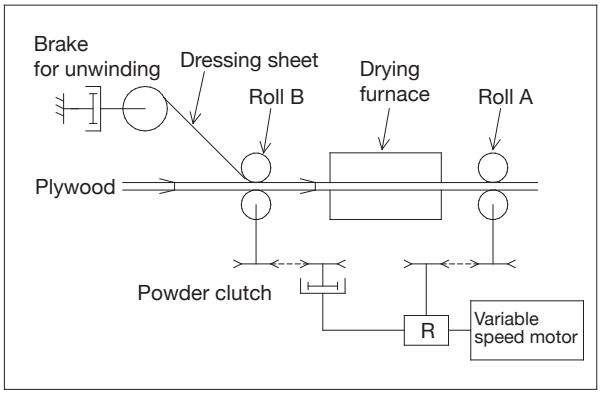

(2) Calculation

(1) Rotation speed of roll B

$$N = \frac{V}{\pi D} = \frac{45 \text{ to } 90}{\pi \times 200 \times 10^{-3}} = 72 \text{ to } 144 \text{ r/min}$$

(2) Roll driving torque

$$T = \frac{D}{2} \times F = \frac{200 \times 10^{-3}}{2} \times (100 \text{ to } 350)$$
$$= 10 \text{ to } 35 \text{ N·m}$$

(3) Heat dissipation

When the input rotation speed of the clutch is decided so that the slip rotation speed becomes 15 r/min when the line speed is 45 m/min, the maximum heat dissipation is as follows.

The input rotation speed N_0 of the clutch at 90 m/min is:

$$N_0 = 144 \times \left(\frac{72 + 15}{72}\right) \fallingdotseq 144 \times 1.2 = 173 \text{ r/min}$$

Therefore, the heat dissipation is:

$$P = 0.105 \times (173 - 144) \times 35 = 107 \text{ W}$$

Based on the above calculation results, use ZKB-2.5BN (rated torque 25 N·m, heat dissipation 160 W at 200 r/min) where the speed has been doubled from the roll B shaft. In this case, the operating range of the torque becomes 5 to 17.5 N·m, and the input rotational speed N'_0 of the clutch will be enough if it is:

$$N'_0 = 288 \times \left(\frac{144 + 15}{144}\right) \fallingdotseq 318 \text{ r/min}$$

The heat dissipation at this time is:

$$P = 0.105 \times (318 - 288) \times 17.5 = 55 \text{ W}$$

■ Powder clutch/brake specification contact sheet

- For unwinding/winding (Note) Circle either one.

Customer name		Machine name		Delivery		Quantity	

Configuration

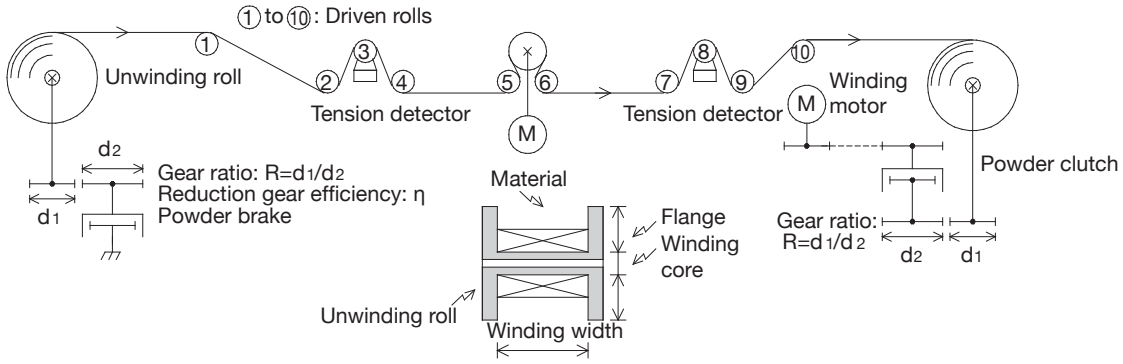

Please fill the items indicated with * without fail.

Operational tension *
Minimum Fmin = _____ N Maximum Fmax = _____ N

Reel diameter *
Minimum Dmin = _____ m Maximum Dmax = _____ m

Line speed *
Minimum Vmin = _____ m/min Maximum Vmax = _____ m/min

Acceleration/deceleration time
Maximum tmin = _____ sec (0→Vmax, Vmax→0)

Reel mass
Weight of material Wm = _____ kg Winding width Lm = _____ mm
Weight of reel core Wc = _____ kg
Weight of flange Wf = _____ kg

Operation cycle
Time required to complete one roll _____ min Interval _____ min

Material
Type _____ Width _____ mm Thickness _____ μm

Environmental condition
Temperature _____ °C Humidity _____ % Vibration _____ m/s² Explosion proof requirement _____

Forced cooling method

Air source	Yes/No	Water	Yes/No

Type of control
(A) Manual (B) Open loop control (C) Feedback control

Type of control
(A) Constant tension (B) Taper ratio (Minimum:)% (Maximum:)%

Turret
(A) Yes (B) No

Auto paster
(A) Yes (B) No

Reel diameter detector
(A) Required (B) Not required (For external taper control)

Note 1. Attach a power system diagram if one is available.
Note 2. If the inertia of the driven roll has a large effect, enter the weight in the blank.

■ Powder clutch/brake specification contact sheet

- For intermediate shaft

Customer name		Machine name		Delivery		Quantity	

Configuration

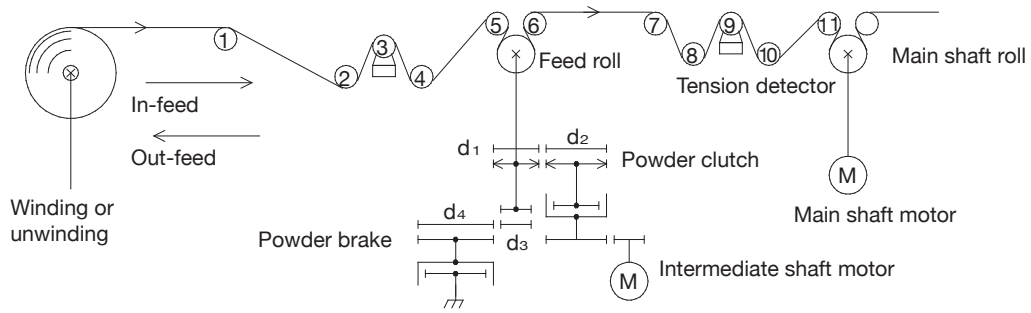

Please fill the items indicated with * without fail.

Operational tension *

Inside F1min= _____ N — On the side of roll (6) for out-feed
F1 max= _____ N — On the side of roll (5) for in-feed
Outside F2min= _____ N — On the side of roll (5) for out-feed
F2 max= _____ N — On the side of roll (6) for in-feed

Feed roll *

Feed roll diameter Do _____ m

Line speed *

Minimum Vmin = _____ m/min Maximum Vmax = _____ m/min

Acceleration/deceleration time

Minimum tmin = _____ sec (0→Vmax, Vmax→0)

Mass of feed roll

Wd = _____ kg

Operation cycle

Time required to complete one reel _____ min Interval _____ min

Material

Type _____ Width _____ mm Thickness _____ μm

Environmental condition

Temperature _____ °C Humidity _____ % Vibration _____ m/s² Explosion proof requirement _____

Forced cooling method

Air source	Yes/No	Water	Yes/No

Type of control

(A) Manual (B) Open loop control (C) Feedback control

Others

Set the efficiency of the reduction gears (d1/d2, d3/d4) to be η=0.9 to 1 and consider the mechanical loss torque of each roll to be negligible.

Find the clutch/brake models and gear ratio d1/d2 and d3/d4 based on the basic specifications above. However, the input rotation speed of clutch shall be set so that the rotation speed of the feed roll is 10% higher than that of the main shaft roll when the clutch is fully engaged. In addition, the bias torque, equivalent to 10% of the maximum tension, shall be applied to the clutch/brake, and the minimum slip rotation speed of the clutch shall be higher than the minimum operational rotation speed of the clutch. When the tension on the feeding side is constantly higher than that of the discharging side, no brake is required. On the contrary, when the tension on the feeding side is constantly lower than that of the discharging side, no clutch is required. However, when the difference between the feeding side tension and discharging side tension is small and the torque based on the difference above is smaller than the minimum control torque of the clutch and brake, both clutch and brake shall be used in combination.

Note 1. Attach a power system diagram if one is available.
Note 2. If the inertia of the driven roll has a large effect, enter the weight in the blank.

Usage precautions

1. Safety Precautions

Carefully read the “Safety Precautions” at the back of the manual, pay attention to safety and use the product correctly.

2. General items

(1) Do not attach the input shaft and the output shaft reversely.
For the powder clutch, the normal mounting method is to use the high-speed rotation side as the input side. (For the ZA type, the hollow shaft is on the output side, and for the ZKB type, the input/output shafts are indicated by the arrows on the external dimension drawing of this catalog and on the name plate.) Usage with the input and output mounted reversely in continuous idling is not recommended in view of the torque characteristics and powder life.
In addition, in principle, the clutch/brake should be used on the horizontal shaft; they cannot be used on the vertical shaft.
When using them in the following conditions, contact us and state the conditions of use.

(a) When used at an inclined angle
(b) When the whole set revolves
(c) In case of special specifications such as low-temperature specifications

(2) Be careful of installation of pulley, coupling, and shaft. When fitting a pulley, coupling, or shaft to the product, be sure to use clearance fit and not to apply excessive force to the product. Applying impacts, etc. to the product may scratch the inside bearings and quickly cause damage.

(3) Be careful of wetness of the powder. The performance becomes unstable if the powder becomes wet, so take great care not to allow water, oil etc. to enter inside. Especially, when installing the product close to the gearbox, oil may flow in through the shaft, so seal the shaft completely. In addition, the product is not hermetically sealed, so it cannot be used in environments where oil mist, oil, or water is directly applied.

(4) Be careful that the surface temperature does not exceed a limit temperature. Control the maximum surface temperature by continuous operation under the conditions shown in the table below. Exceeding this value will greatly reduce the durability.

Limit of clutch/brake surface temperature (stator circumference)

Model	Limit temperature (approximate)
Natural cooling Thermoblock cooling Water cooling type ZKB-WN	100°C or lower
Forced air cooling	70°C or lower

However, the ambient temperature and cooling water temperature are based on 30°C.
Consider the above limit temperature as a guide, and be sure to use the product within the allowable continuous heat dissipation.

(5) Be careful of the compressed air piping. The powder clutch/brakes are not hermetically sealed. Especially with the ZA-A_1 powder/clutch and ZA-Y_1 powder brake, when compressed air flows into (passes thorough) the bearings, the air passes the powder gap in the product and may cause powder to leak outside. When the compressed air piping for the air chuck of the unwinding/winding reel is arranged so that it enters the penetration shaft of the powder clutch/brake, perform installation so as to prevent air leakage and make a device configuration that releases air in order to prevent air leakage from the joint.

3. Relationship between rated torque and rated current

(1) Torque significantly exceeds the rated torque when the rated current is applied at the time of shipment (break-in operation) (refer to the standard torque characteristics for each model). This is because the torque is set to be high in anticipation of aged deterioration of the powder. Use the product without exceeding the rated torque.

(2) Torque reduction occurs due to aged deterioration, but it is possible to adjust the torque by increasing the current. However, use the product without exceeding the rated current.

4. Torque

(1) For the current vs. torque characteristics, the standard values of new products at 200 r/min are listed. As the powder deteriorates over time, this standard characteristic will change. Correct the change in torque characteristics with current.

(2) Torque can be easily controlled by current, but note that torque may become unstable, especially when using large models (torque of 100 N·m or more) at high-speed rotation and at low current.

(3) Note that when ON/OFF control is performed at high-speed rotation, it may take a considerable amount of time to reach the predetermined torque.

(4) Torque variation near the rated current is approx. ±10% for each product. The variation between products is approx. ±15% of the standard torque characteristic. Therefore, when clutches and brakes are operated in parallel, it is recommended to design so that current can be individually adjusted.

(5) The torque value shows hysteresis. Therefore, please be aware that an increase or decrease of the current will cause a difference in torque.

(6) The idling torque described in the specifications column of each product is a representative measured value. The idling torque will change, depending on the mounting method, driving conditions, driving time, etc. Since there is variation among individual products, be sure to select the appropriate model by making allowance for this.

5. Lifespan

(1) When the product is used in continuous slip for winding or unwinding, the lifespan of the powder varies depending on the usage conditions (relative slip speed, etc.), but in general, when it is used at the allowable continuous heat dissipation, the life of the powder, where the torque drops to the rated torque at the rated current, is approx. 5000 to 8000 hours. However, if it is used at the rated torque or lower, it can be used continuously, so the life will be extended. However, even at the same heat dissipation, when the slip rotation speed, that is, the relative rotation speed, is continuously at a relatively high level, the life time tends to be short, so make settings so that the relative rotation speed is as low as possible.

(2) Using the product with allowance for allowable continuous heat dissipation can extend the life of the powder. For example, if the product is used at 50% of the allowable continuous heat dissipation, the service life may be approx. twice or more.

(3) The ZKG and ZX series do not allow powder replacement, so the product needs to be replaced if the powder life is reached.

6. When operating at low speed (15 r/min or less)

When using the product in continuous operation such as tension control, it shows stable torque characteristics, but in intermittent operation involving idle rotation, the rise of torque may be slightly delayed immediately after voltage application. To avoid this, use the product as follows.

(1) Even after completion of unwinding, keep applying weak excitation (5 to 10% of rated current) so that the powder does not fall off from the working surface.

(2) Increase the speed so that the minimum rotation speed becomes 15 r/min or higher. However, be aware that accurate torque control may not be possible due to mechanical loss, etc. of the speed increasing mechanism if the speed increasing rate is large.

(3) The ZKB-N, ZKG, and ZX series can be used from approx. 5 r/min.

7. Precaution Be sure to perform break-in driving

(1) What is break-in driving?

Since the powder inside the powder clutch/brake is unevenly distributed due to shock during transportation, break-in operation must be performed before starting regular operation.

To obtain the intrinsic performance of the powder clutch/brake, it is important that the powder is evenly distributed within the powder gap.

If the powder is unevenly distributed, the torque may decrease, fluctuate, become fixed, etc., preventing the product from demonstrating its intrinsic performance.

Break-in can uniformly distribute the unevenly distributed powder within the powder gap and generate a stable torque proportional to the exciting current.

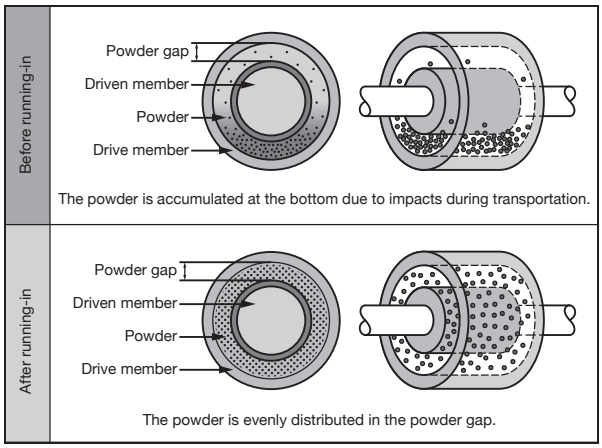

(2) Break-in driving procedure

This is an example of an effective way to break in if the regular break-in is difficult.

Note: In either case, be careful not to cause the surface temperature of the clutch/brake to exceed the limit shown in the instruction manual or catalog.

[Reference] Regular break-in condition

(1) In the case of a clutch, fix it to prevent the output shaft from rotating.
(This step is unnecessary when the load torque is large.)

(2) Rotate the input shaft at approx. 200 r/min for approx. 1 minute. Then while rotating,

(3) Set the exciting current to 1/4 to 3/4 of the rated value and excite it approx. 10 times in the cycle of ON for 5 seconds and OFF for 10 seconds.
If the uneven distribution of the powder is large and it is difficult to carry out break-in, repeat approx. 10 times in the cycle of ON for 5 seconds and OFF for 10 seconds at the rated excitation.

1. When the rotation speed of the input shaft cannot be set to approx. 200 r/min

Set the exciting current ON time as follows. Calculate the time until the number of revolutions of the input shaft reaches approx. 20 times.

(Example) In the case of 30 r/min

$$60 \text{ seconds} \times \frac{1}{30 \text{ r/min}} \times 20 \text{ times} = 40 \text{ seconds}$$

Therefore, turn ON for 40 seconds, turn OFF for 10 seconds, and repeat it approx. 10 times.

In some cases it may be effective to repeat ON for 2 seconds and OFF for 0.5 second at the rated excitation.

2. When the output shaft cannot be fixed in the case of a clutch

(1) Increase the load to make it as difficult as possible for the output shaft to rotate.

(2) Set the exciting current to approx. 1/8 to 1/4 of the rating.

(3) Set the ON time as follows. Calculate the time until the relative rotation of the input shaft and output shaft reaches approx. 20 times in total.

(Example) In the case of input shaft 300 r/min and output shaft 280 r/min

Relative rotation speed 300 - 280 = 20 r/min

$$60 \text{ seconds} \times \frac{1}{20 \text{ r/min}} \times 20 \text{ times} = 60 \text{ seconds}$$

Therefore, turn ON for 60 seconds, turn OFF for 10 seconds, and repeat it approx. 10 times.

Even if the break-in is carried out in the above manner, the effect is slightly inferior to the regular case, but the break-in will be gradually completed during normal operation.

(3) Effect of break-in driving

Figures 1 and 2 are examples of torque measurements made when the exciting current is turned ON and OFF and when it is kept ON.

When the exciting current is turned ON and OFF, the torque becomes higher every time the current is turned ON and OFF, which verifies the effect of break-in. On the other hand, if the exciting current remains ON, the figure shows that the torque becomes saturated in the low state.

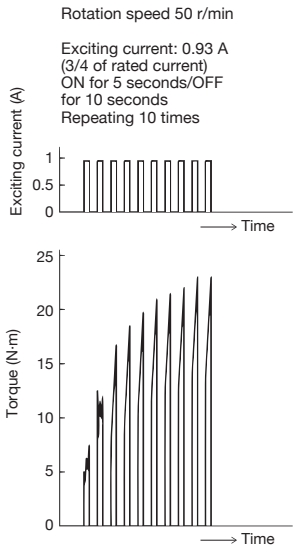

Fig. 1 Measurement example when tuning the exciting current ON and OFF. (ZKB-2.5XN powder brake)

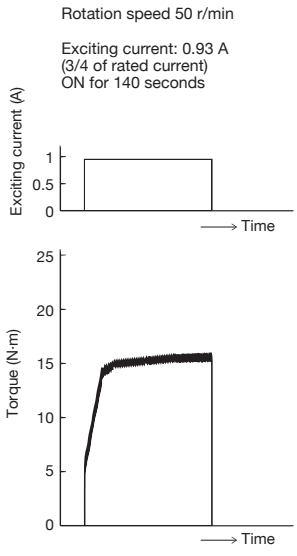

Fig. 2 Measurement example when maintaning the exciting current ON. (ZKB-2.5XN powder brake)

* In the following cases, break-in is insufficient.

(1) Torque output remains low.
(2) Torque does not stabilize.
(3) Noise, pulsation of torque, or stuck at startup occurs.

Usage precautions

8. For forced air cooling

(1) Install an air filter.
Generally, compressed air used as cooling air contains oil and moisture, so be sure to use clean dry air passed through an air filter (complete oil removal type).
(If compressed air not passed through an air filter is used, the powder becomes moist due to moisture and oil content and the performance drops sharply.)

(2) If the piping is long and it is branch piping, check if the air flow rate near the clutch/brake suction pipe is more than the specified amount.

9. Thermoblock cooling type

(1) An axial flow fan (blower) is provided. If the performance of this axial flow fan decreases, heat dissipation will be worse and the allowable continuous heat dissipation rate will be reduced, so install the fan with a clearance around it.
Especially when the surrounding environment is bad and there is a possibility of foreign matter adhering to the guard of the axial flow fan, clean it periodically.

(2) Since a thermal switch for detecting the temperature is provided on the side of the stator, be sure to connect it to an alarm device for alarm detection.

10. For water cooling

(1) Provide a drain cock. Discontinuing operation for a long time with cooling water kept inside is not preferable in view of rust prevention and moisture proofing, so install a drain cock on the water supply side so that the cooling water can be drained. In cold climates, be especially careful as cooling water may freeze during shut-down and damage the water channels of the powder brake.
Also, periodically remove the scale generated in the cooling water channel.

(2) Provide a protection circuit in case of water cut-off. Water-cooled brakes may burn the inside if they are shut off even for a short period of time, so provide a protection circuit (flow relay) in preparation for water cut-off.

(3) Be careful of condensation. Note the following points for the water-cooled brake in order to prevent condensation due to supercooling (condensation moistens the powder, which adversely affects its characteristics).

(a) Supply water at approximately room temperature. If the work volume is small and the surface temperature goes down below 50°C, reduce the volume of water supply.
(b) Stop supplying water immediately after stopping work.
(c) When used for a turret, do not supply water to brakes that are not used.

(4) After a relatively large brake of the ZKB-W series is shut down and left for a long time, a phenomenon such as the shaft not turning may occur.
This phenomenon occurs when the drive member that has thermally expanded during operation at high load shrinks during cooling and bites the powder with the driven member (powder gap). It can be prevented by rotating the shaft several times immediately after shut-down. If it does not rotate, it can be easily released by lightly giving a shock with a plastic hammer to the coupling attached to the shaft (do not give a big shock directly to the brake unit and shaft).

11. Selection

(1) Even within the allowable continuous heat dissipation, products cannot be used exceeding the rated torque.

(2) When the control range of tension is wide, multiple clutches may be installed and switched over during operation. In this case, use an electromagnetic clutch to disconnect the unused clutch to prevent the output side from being forcibly idled.

(3) When the gear ratio is too large, accurate control may not be possible due to the influence of mechanical loss. A gear ratio of 5 or less is recommended (especially in the low torque region).

12. Abnormal torque at startup

(1) Depending on the operation pattern (turning on the coil current at rotation stop and applying rotation to the input shaft, or starting rotation at the same time as turning on the coil current), a temporarily higher torque (peak torque) than specified may be generated at startup.
Especially when vibration is added while the current is off, powder tends to be unevenly distributed, so this tendency appears remarkably. To counter this problem, keep supplying weak exciting current to the coil of the clutch/brake even while it is stopped. This makes the problem less likely to occur.

(2) Peak torque may occur similarly when the powder is wet. In this case, however, the product may need to be replaced.

13. Others

(1) Note that at high altitude the allowable continuous heat dissipation will be lowered due to atmospheric pressure. This specification applies to an altitude of 1000 m or less.

(2) The protection degree is IP00. Therefore, the powder clutch itself may emit oxidized powder or fine powder, so it cannot be used where dust is completely prohibited.

(3) The powder clutch/brake does not generate coupling sound or braking sound, unlike friction plate type clutches/brakes. However, it generates friction sound because torque is generated by the friction force of powder connected by electromagnetic force. Normally, the friction sound is of a level that is not a problem in ordinary machines, but it may become large due to the influence of internal powder distribution (usually, the sound will reduced after break-in and operation for some time).

(4) There is no problem at the vibration levels of general printing machines, paper machines, packaging machines, etc. without abnormal vibration, but it cannot be used on machines with impact force.

(5) When a voltage is applied to the clutch/brake, a magnetic flux is generated, and the installation shaft, etc. are magnetized by this flux. If this magnetization becomes a problem, installation with nonmagnetic materials is recommended, but it cannot be completely eliminated. Note that the protruding shafts of models such as the ZKB are also magnetized.

(6) Lead wire length varies by approx. ± 10%.
(Example: Lead wire length 200 is 200 ± 20 mm.)

(7) Operating temperature and humidity of clutch/brake
Ambient temperature: 0 to 40°C
Relative humidity: 30 to 90%

14. Allowable shaft load

1. Bearing load is determined based on a fatigue life of 15000 hours.
2. Thrust load is not permitted in principle.

(1) ZKB series

There are the following 2 methods of connecting the input and output of the ZKB type powder clutch/brake:

(a) Connection method using couplings

(b) Connection method using pulleys

In the case of connection using couplings in (a), our policy is to use elastic couplings, so the shaft radial load never becomes a problem.

However, in the case of pulley connection in (b), the product must be used by restricting the shaft radial load based on the shaft strength and bearing load capacity.

Table 1 Allowable shaft load (radial load) of ZKB series

Model name	Allowable shaft load (N)			
	300 r/min	500 r/min	1000 r/min	1800 r/min
ZKB-0.06	140	140	125	120
ZKB-0.3	280	280	245	240
ZKB-0.6	330	330	260	215
ZKB-1.2	360	325	255	210
ZKB-2.5	550	460	365	300
ZKB-5	975	975	770	635
ZKB-10	2090	1760	1400	1150
ZKB-20	2600	2190	1740	1430
ZKB-40	3850	3240	2570	2120

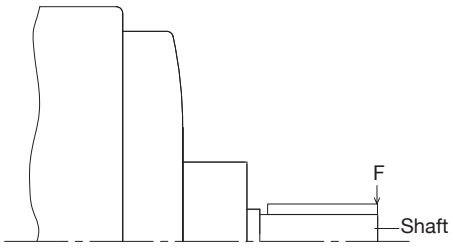

1. Natural cooling, forced air cooling, and water cooling clutches and brakes have the same values as long as they have the same torque capacities.
2. The table indicates allowable load values of the shaft strength or bearing radial load, whichever is smaller.
3. The load application point is based on the shaft end face. Note that the permissible value will be small if the point of application is outside the end face.
4. Calculate the shaft load F by the following formula.

$$F = \frac{2T}{D} \times K(N)$$

T: Transmission torque (N·m)

D: Pulley diameter (m)

K: Load factor (timing belt 1.5, V belt 2.5, sprocket 1.5)

(2) ZKG series

Table 2 Allowable shaft load (radial load) of ZKG series

Model name	Allowable shaft load (N)			
	300 r/min	500 r/min	1000 r/min	1800 r/min
ZKG-5AN	30	30	30	30
ZKG-10AN	75	75	75	75
ZKG-20AN	120	120	120	120
ZKG-50AN	210	210	210	210
ZKG-100AN	240	240	240	240
ZKG-5YN	30	30	30	30
ZKG-10YN	75	75	75	75
ZKG-20YN	120	120	120	120
ZKG-50YN	450	400	340	280

Note 1. Since both shafts of each ZKG type powder clutch have the same configuration, the allowable shaft loads are the same.

Note 2. The load point is based on the shaft end face.

Note 3. Note that when the load application point is outside the shaft end face, the allowable value becomes smaller.

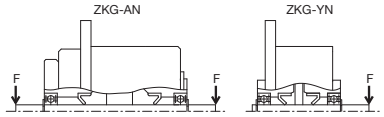

(3) ZA series

Table 3 Allowable shaft load (radial load) of ZA series

Model name	L (mm)	Allowable shaft load (N)			
		300r/min	500r/min	1000r/min	1800r/min
ZA-0.6A1	-	560	470	375	310
ZA-1.2A1	-	1080	910	720	590
ZA-2.5A1	-	1120	950	750	620
ZA-5A1	-	1790	1510	1190	980
ZA-10A1	-	1930	1630	1290	1060
ZA-20A1	-	4430	3740	2960	-
ZA-0.6Y	28	305	260	205	170
ZA-1.2Y1	32	340	290	230	185
ZA-2.5Y1	44.5	425	360	285	235
ZA-5Y1	58	880	760	600	500

Note 1. The load application point is based on the position indicated by “F” in the above figure.
Note that the permissible value will be small if the point of application is outside the above figure.

Note 2. In principle, pulleys cannot be directly applied to ZA-10Y1 to 40Y.

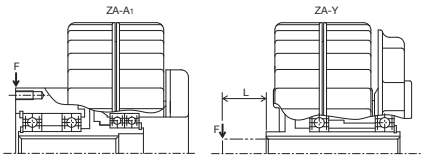

(4) ZX series

Table 4 Allowable shaft load (radial load) of ZX series

Model name	L (mm)	Allowable shaft load (N)		
		100 r/min	200 r/min	400 r/min
ZX-0.3YN-24	24	1000	795	630
ZX-0.6YN-24	28	1305	1035	820
ZX-1.2YN-24	32	1485	1180	935

Note 1. The load application point is based on the position indicated by “F” in the figure.

Note 2. Note that when the load application point is outside the “F” position, the allowable value becomes smaller.

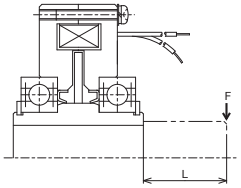

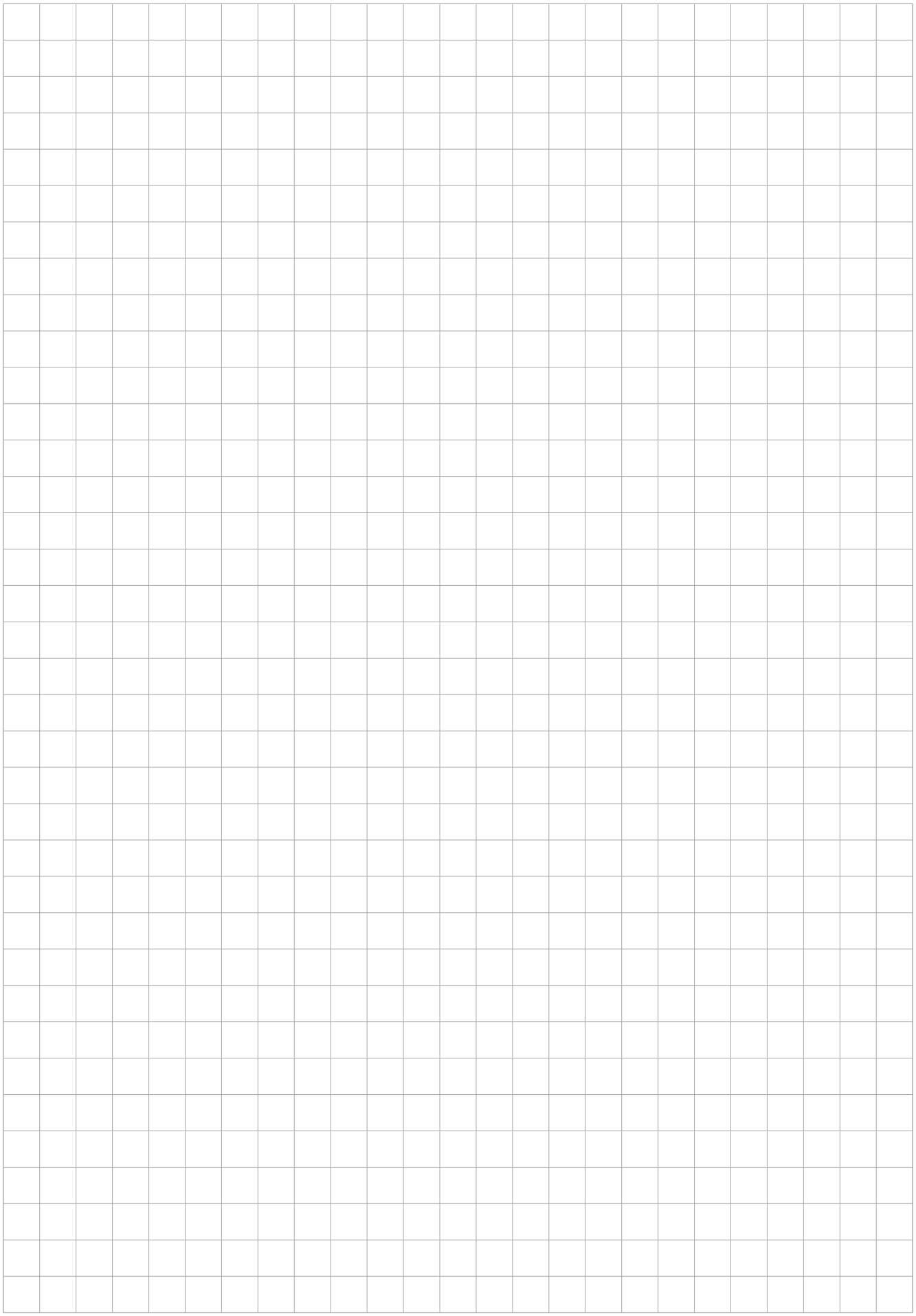

Tension Controller

■Tension Controller

■Clutch Amplifier

■Tension Meter/
Tension Amplifier

■Tension Detector

Table of Contents

Tension Controller

Product Organization B-3

Tension Controller
- LE7-40GU-L tension controller B-4
- LE-10WTA-CCL/LD-10WTB-CCL tension controller B-16
- LE-30CTN tension controller B-21
- LE-40MTA(-E)/LE-40MTB(-E) tension controller B-28
- LE-40MD reel diameter calculation unit B-37
- LD-30FTA tension controller B-40
- LD-05TL tension controller B-46

Clutch Amplifier
- LE-50PAU power amplifier B-48
- LD-40PSU power supply unit B-50
- LD-10PAU-A/LD-10PAU-B power amplifier B-52

Tension Meter/Tension Amplifier
- LM-10WA-CCL tension meter B-56
- LM-10PD tension meter B-61
- LM-10TA tension amplifier B-63

Tension Detector
- LX-TD/LX-TD-928 tension detector B-65
- LX-05BRR-928 safety barrier B-69
- LX7-F tension detector B-71

Product Organization (are products covered in this chapter)

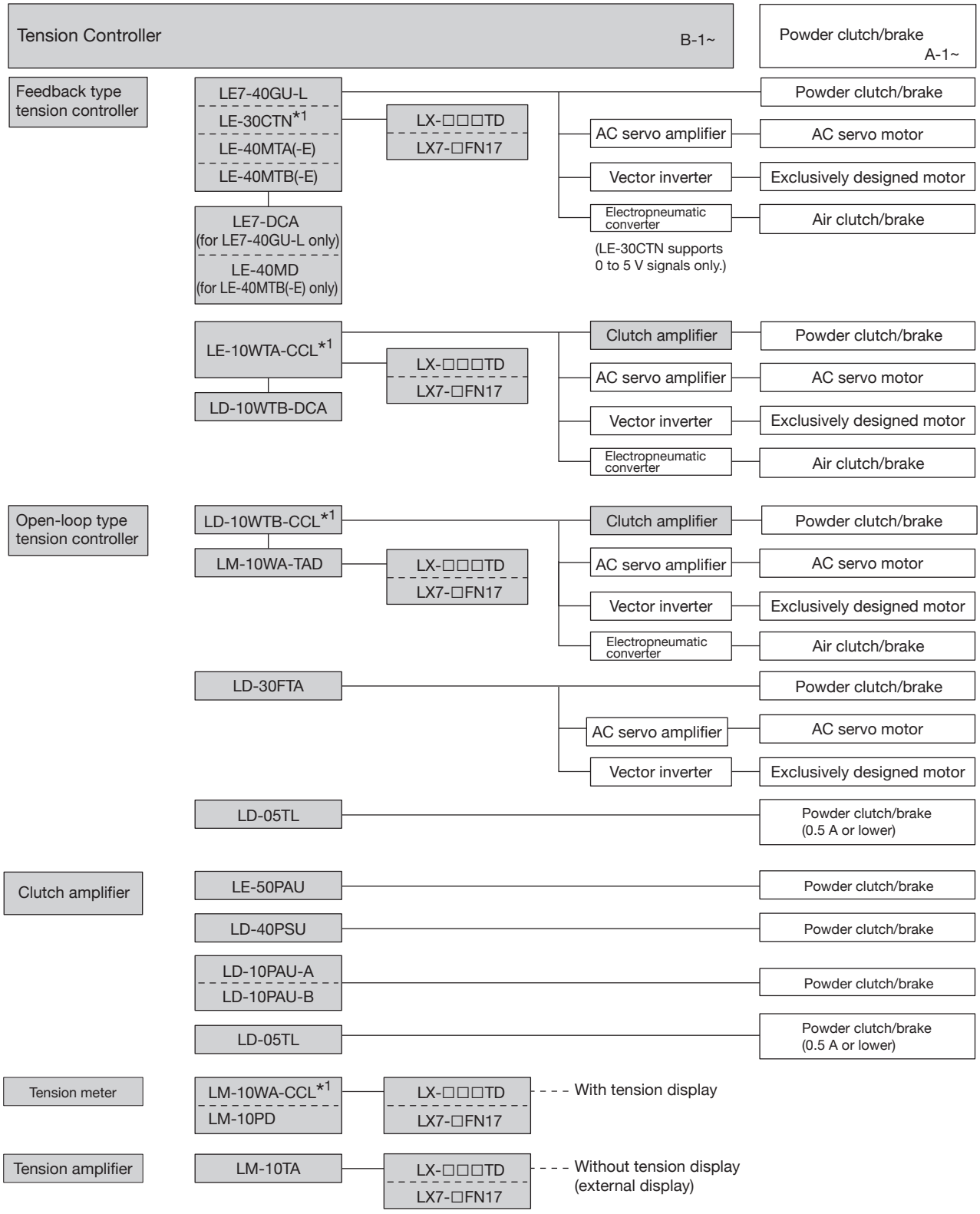

Note 1: For explosion-proof specifications, use the LX-□□□TD-928 series tension detector and use the LX-05BRR-928 type safety barrier together.
Note 2: AC servo motors and vector control motors are covered under torque controllable products.
*1: LE-10WTA-CCL, LD-10WTB-CCL, LE-30CTN, LM-10WA-TAD, LD-10WTB-DCA and LM-10WA-CCL comply with CE marking. For details, refer to the instruction manual.

LE7-40GU-L tension controller

Feedback control | Open-loop control

The LE7-40GU-L tension controller is used in combination with the LX7-F/LX-TD/LX-TD-928 tension detector to automatically control the material tension during unwinding, intermediate shaft, and winding of long materials.
Such actuators as powder clutches/brakes, servo motors (torque mode), and air clutches/brakes can be used with these controllers, and they come with a built-in clutch amplifier and auxiliary power supply for clutches and brakes that operate on 24 V DC. In addition, feed forward/feedback combined control and open loop control can also be performed using the LE7-DCA reel diameter calculation option.

Features

Highly advanced tension control

- Tension control of open loop control can be performed using the reel diameter calculation option. Highly precise tension controls with high response and stability are achieved by feedforward/feedback complex control brought by the combination of feedback control and open loop control.
- Sophisticated tension control is achieved using the polygonal line taper function and inertia compensation gain automatic calculation based on the reel diameter data from the reel diameter calculation option and on the line speed/line acceleration data.
- The polygonal line taper function allows the setting of up to 8 points to enable detailed taper control in accordance with the material and reel diameter.

Easy to use

- Easy-to-understand, simple button design. The liquid crystal touch panel can be switched between Japanese, English, and Chinese for global support.

Compatible with FA network

- Can be connected to various FA networks as well as CC-Link IE Field Network Basic. Enables visualization of production sites.

Panel screen configuration

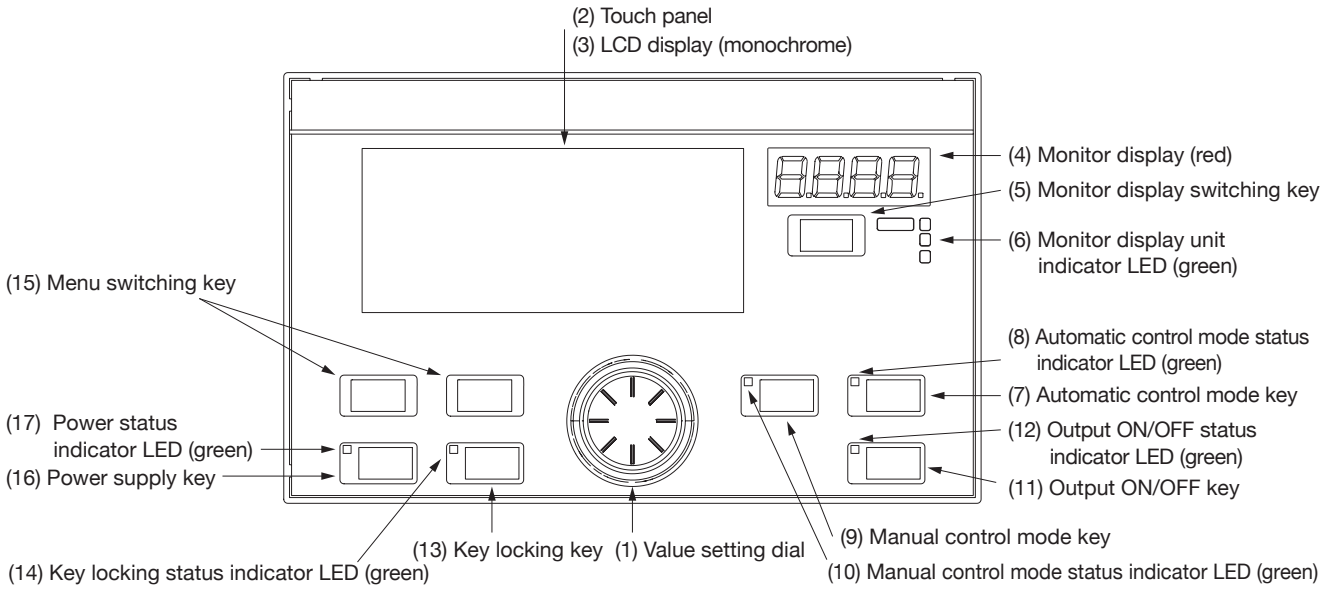

(1) Value setting dial	Dial to set various setting values. Simultaneous pressing with the key locking key prohibits all panel operations.
(2) Touch panel	Touch panel for changing screens and setting various setting values. Displays various set values, setting items, control status etc.
(3) LCD display (monochrome)	Dot matrix LCD display.
(4) Monitor display (red)	Displays the tension, reel diameter, and output values.
(5) Monitor display switching key	Switches among the items to be displayed on the monitor display.
(6) Monitor display unit indicator LED (green)	Displays the unit for items displayed on the monitor display.
(7) Automatic control mode key	Selects the automatic control mode.
(8) Automatic control mode status indicator LED (green)	Displays the automatic control mode status.
(9) Manual control mode key	Selects the manual control mode.
(10) Manual control mode status indicator LED (green)	Displays the manual control mode status.
(11) Output ON/OFF key	Selects control output ON/OFF.
(12) Output ON/OFF status indicator LED (green)	Displays the control output status.
(13) Key locking key	Disables other keys to prevent accidental changes to the setting values.
(14) Key locking status indicator LED (green)	Displays whether the changing of various settings is prohibited or not.
(15) Menu switching key	Reads the data stored in the menu.
(16) Power supply key	Selects between power standby and ON.
(17) Power status indicator LED (green)	OFF: Off (No AC power supply) Flashing: Standby (AC power supply supplied + power supply key OFF) ON: On (AC power supply provided + power supply key ON)

● Sample display switching

- Example of operation mode screen

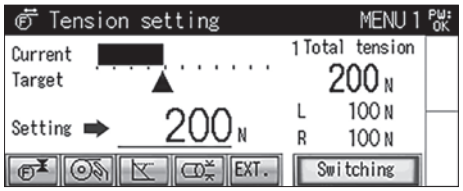

Set the target tension in machine operation.

- Example of adjustment mode screen

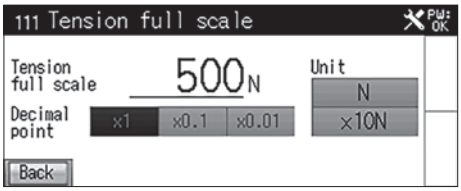

Set up the tension full scale.

Externally connected devices

Some of the devices that can be connected to the input/output terminals of this model of tension controller include the following. Tension detector, actuator, and some of the signal input switches are essential to the system; other components are connected as necessary.

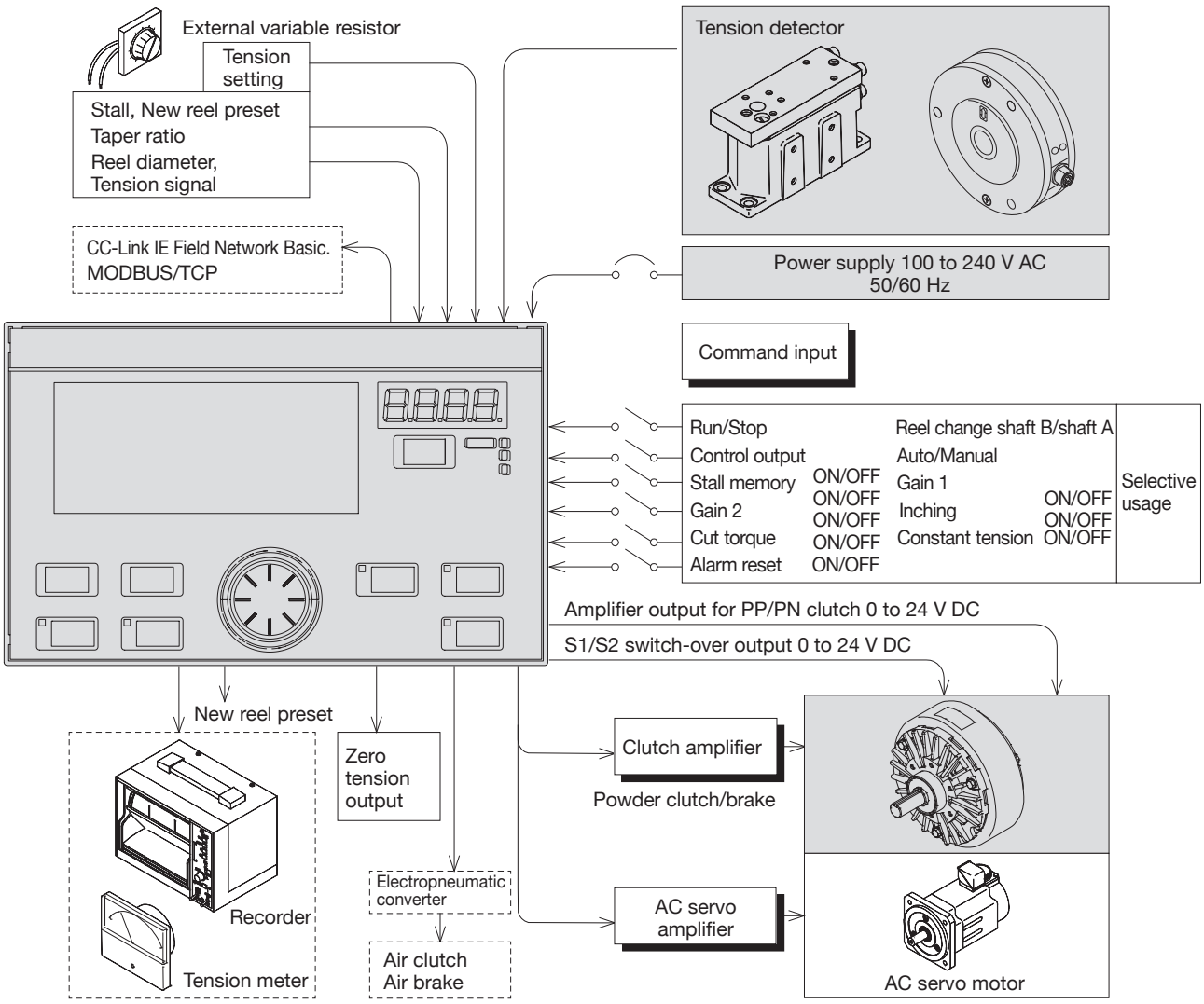

Outline dimensions (mm)

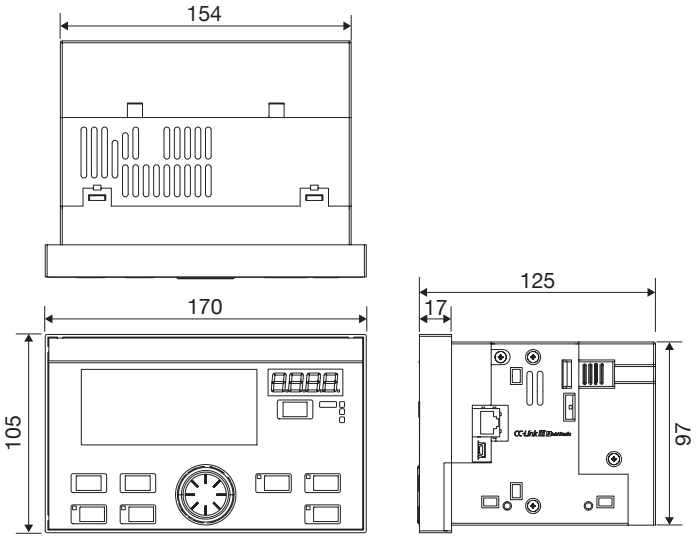

• Panel cutting dimensions for mounting on panel surfaces

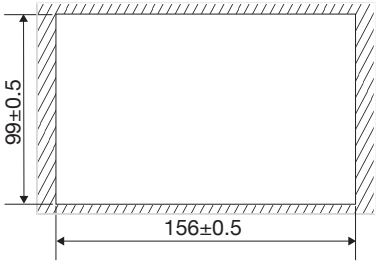

Accessory: 2 mounting brackets
Screw (M4x10) 4 screws
Screw (M4x6) 2 screws
Dust proof protection sheet 1 sheet

Exterior color: Munsell N1.5 equivalent

Specifications

● General specifications

Item	Specifications				
Operating ambient temperature	0 to +40°C				
Storage ambient temperature	-20 to +60°C				
Operating ambient humidity	35 to 85% RH (no condensation)				
Storage ambient humidity	35 to 85% RH (no condensation)				
Vibration resistance*1		Frequency	Acceleration	Half amplitude	10 times in each of X, and Z directions (80 minutes in total)
	Panel mounting	5 to 8.4 Hz	-	1.75 mm	
		8.4 to 150 Hz	4.9 m/s^2	-	
	Floor mounting	5 to 8.4 Hz	-	3.50 mm	
		8.4 to 150 Hz	9.8 m/s^2	-	
Impact resistance*1	147 m/s^2, action time 11 ms, 3 times in each of X, Y and Z bi-directions with half-sine pulse				
Noise tolerance	Noise voltage: 1000 Vp-p, Noise width: 1 μs Using 30 to 100 Hz cycle noise simulator				
Withstand voltage	1500 V AC for 1 minute, measured between all terminals together*2 and the grounding terminal				
Insulation resistance	5 MΩ or more using 500 V DC insulation resistance tester: Measure across all terminals*2 and grounding terminal				
Grounding	Class D grounding (100 Ω or less, common grounding with strong power field not possible)				
Operating atmosphere	Free of corrosive, flammable or conductive gases, and low levels of dust				
Operating environment	Indoor use				
Operating altitude	0 to 2000 m				
Over voltage category	II				
Pollution level	II				
Installation site	Inside the control panel				

*1: Evaluation criteria are based on IEC 61131-2.
*2: SLD terminal is excluded.

● Basic specifications

Item		Specifications
Outline dimensions		105(H) × 170(W) × 125(D) mm
Weight		Approx. 1.0 kg
Installation method		Panel mounting, floor mounting
Wiring	Power input terminal block	Spring clamp 24 to 16 AWG (0.2 to 1.5 mm^2) terminal block, not detachable
	Powder clutch/brake Output terminal block	Spring clamp 24 to 16 AWG (0.2 to 1.5 mm^2) terminal block, not detachable
	Signal I/O terminal block	Spring clamp 24 to 16 AWG (0.2 to 1.5 mm^2) terminal block, detachable
Power supply	Input	100 to 240 V AC
	Output	For tension detector 5 V DC
		For contact input 24 V DC
		For variable resistor 5 V DC
Display	LCD	320 × 128 dots TFT monochrome
	7-segment LED (for monitor)	4 digits (1 set)
	Unit display LED	4 types (1 set)
	Status display LED	6 points
Operation	Touch panel	Analog resistance film type
	Jog dial	With push ON switch
	Key switch	8 points
Contact signal	Input	General-purpose, 6 points, sink/source selectable
	Output	General-purpose, 2 points
Analog signal	Input	General-purpose, 3 points
	Output	General-purpose, 2 points
Tension Detector Input		For LX type tension detector or for strain gauge (range switching)
Control output	Output for 24 V DC clutch/brake	0 to 24 V DC, rated 2.7 A for control, constant voltage/constant current control selectable
		For pre-drive/old reel stop. Total 0 to 24 V DC control is 2.7 A or less.
	Voltage output for servo amplifier and inverter	±2.7 V DC, ±5 V DC, ±8 V DC, ±10 V DC, selectable
		For pre-drive/old reel stop. ±2.7 V DC, ±5 V DC, ±8 V DC, ±10 V DC, selectable
	Current output for electro-pneumatic converter	0 to 20 mA DC, 4 to 20 mA DC, selectable
Communication	Ethernet communication	CC-Link IE Field Network Basic, SLMP, MODBUS/TCP (slave), GT Designer3
	USB communication	Personal computer communication (GT Designer3 and data transfer tools)
	RS-485 communication*1	N:N networks, MODBUS/RTU, and ASCII (slave)
Optional components	Extension option	LE7-DCA type reel diameter calculation option and LE7-CCL type network option*1
	External memory cassette	LD-8 EEPROM type EEPROM cassette

*1: When connecting to CC-Link by using LE7-CCL, RS-485 communication cannot be used.

External connection

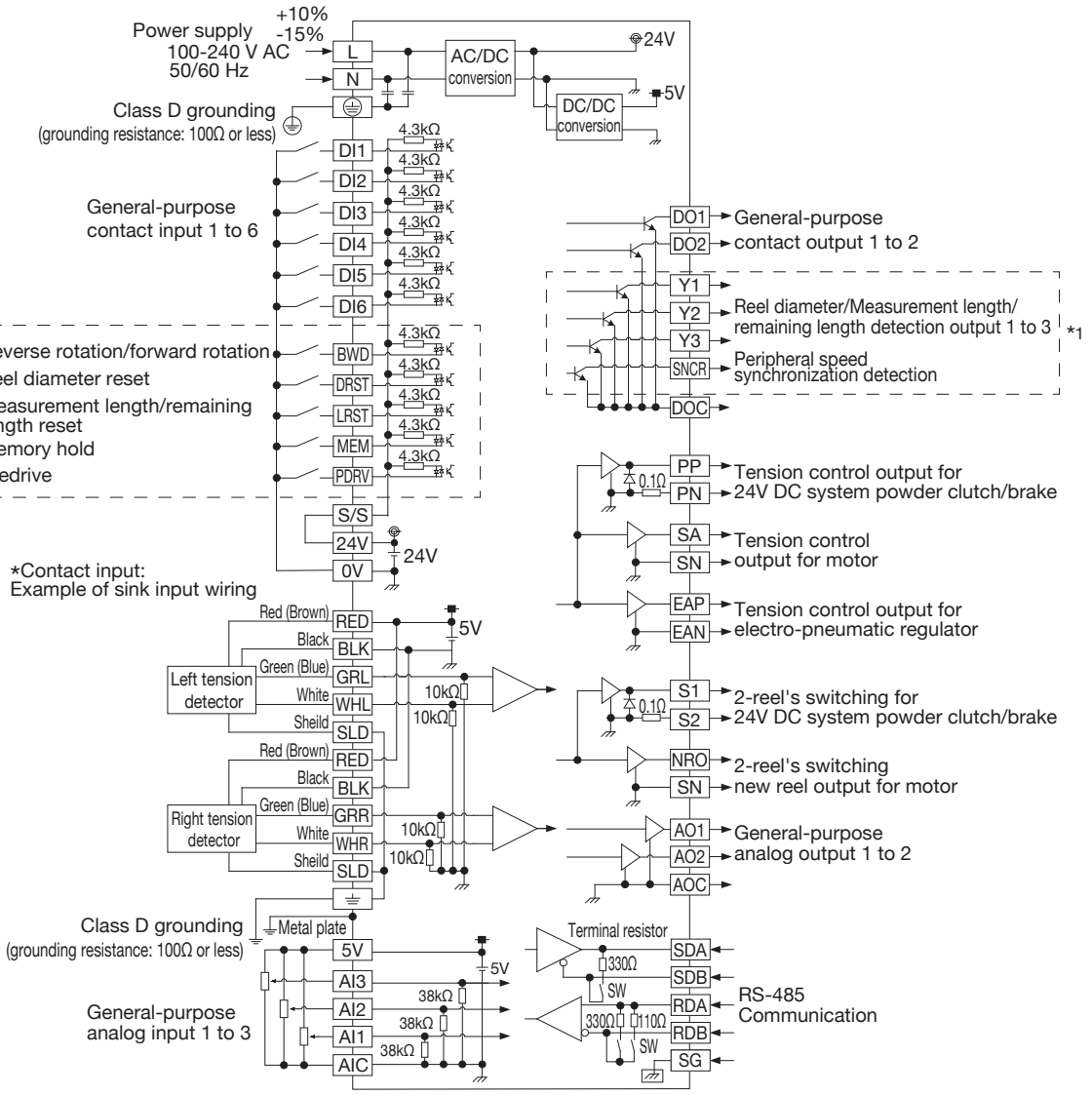

*1: Used only when LE7-DCA is connected.

● Terminal layout

• Powder clutch/brake output signal terminal block (CN2)

S2	S1	PN	PP

• Power terminal block (CN1)

⏚	NC	N	L

• Signal terminal block 1 (CN3)

0 V	S/S	24 V	DI6	DI5	DI4	DI3	DI2	DI1	NC	AO2	AO1	AI2	5 V	SLD	SLD	WHL	GRL	BLK	RED
DOC	DO2	DO1	NC	SN	NRO	SN	SA	EAN	EAP	AOC	AIC	AI3	AI1	⏚	SLD	WHR	GRR	BLK	RED

• Signal terminal block 2 (CN4)

SG	RDA	SDA	NC	NC	NC	SNCR	Y3	Y2	Y1
RDB	SDB	NC	NC	NC	PDRV	MEM	LRST	DRST	BWD

*** : Input system terminal *** : Output system terminal

LE7-DCA reel diameter calculation option

The reel diameter calculation option LE7-DCA is connected to the LE7-40GU-L tension controller, and is used for detecting the reel diameter in a non-contact method by calculating the ratio of reel shaft pulses and measuring pulses. In addition, the line speed can be detected and the length can be measured so that the reel shaft rotational speed command and timing detection signal can be output based on the reel diameter information. (This product cannot be used alone.)

Features

Connecting to the LE7-40GU-L tension controller enables advanced tension control such as open loop control and feedforward/feedback combined control.

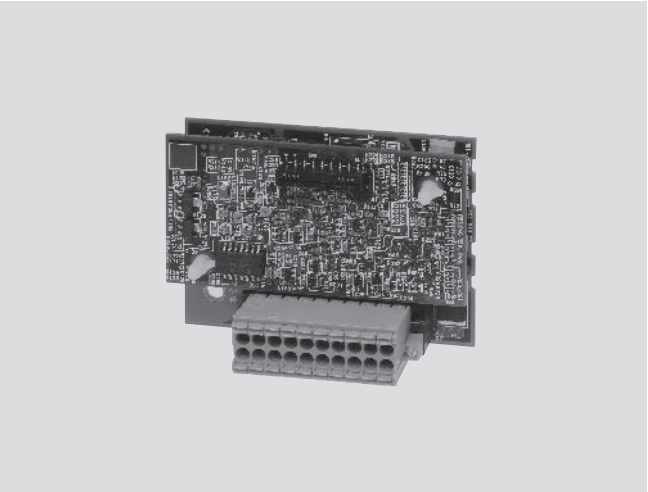

● Constant slip control of the powder clutch possible for winding

- When winding with an inverter and a powder clutch, performing constant slip control of the powder clutch using the reel shaft rotation speed signal greatly reduces heat dissipation. It has various advantages compared with using the powder clutch at a fixed input rotation speed.
- The selection of a powder clutch with a smaller rated torque may be possible.
- The life of the powder clutch may be significantly extended.

● Timing detection of reel diameter and length measurement is possible.

3 contact points are provided for connection to various timing detectors.

Outline dimensions (mm)

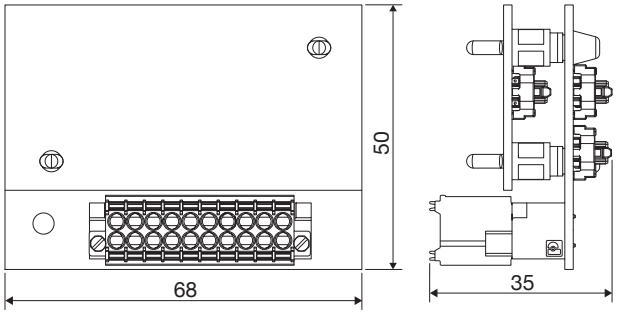

• Mounting to the LE7-40GU-L tension controller

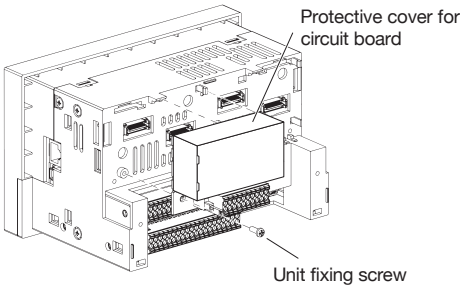

Specifications

● Basic specifications

Item		Specifications
Outline dimensions		50(H) × 68(W) × 35(D) mm
Weight		Approx. 0.2 kg
Power supply	Input	No input (supplied from LE7-40GU-L)
	Output	12 V DC for encoder
		12 V DC for proximity switch
Input	Reel shaft pulse input	Input for reel shaft pulse sensor, 2 points
	Measuring pulse input	Input for measuring pulse sensor
	Contact input*1	Reverse rotation/forward rotation, reel diameter reset, measurement length/ residual length reset, memory hold, 5 points for pre-drive
Output	Contact output*1	Timing detection, 3 points For reel diameter, measurement length/remaining length, switchable
		Peripheral speed synchronization

*1: LE7-40GU-L input/output signals are used for the contact input and contact output. Refer to the following for the input/output specifications.
LE7-40GU-L APPLICATION MANUAL (SH-170022ENG)

● External specifications

Item	Specifications
Target line velocity	V = 0.1 to 1,000 m/min
Acceleration	a = V/t = 1 to 50 m/min/sec t = acceleration/deceleration time
Reel diameter	D = 0 to 2,000 mmϕ
Material thickness	T = 0.1 μm to 10 mm
Measurement length/ remaining length	0 to 65,000 m
Reel shaft rotational speed	N = 0 to 3,600 r/min
Measuring pulse frequency	1.5 Hz to 30 kHz
Reel shaft pulse frequency	0 to 200 Hz

● I/O specifications

Item	Terminal names	Specifications		
Power output	12 V	Pulse sensor power	• The rated voltage: 12 V DC • Voltage range: 11.4 to 12.6 V DC • Current value: 130 mA or less Total of measuring pulse sensor and reel shaft pulse sensor × 2	
		Pulse input power	• The rated voltage: 12 V DC • Voltage range: 11.4 to 12.6 V DC • Current value: 21 mA or less	
	0 V	0 V		
Pulse input	SPL	Measuring pulse input	• ON/OFF time width = 15 μsec or more each Frequency = 30 kHz or less • 1 pulse per measuring roll circumference 1mm*1	• 11.4 to 12.6 V DC • ON current =approx.7 mA • Sink/source input
	SPRA	Reel shaft pulse input (A-axis)	• ON/OFF time width = 0.5 msec or more each • Frequency = 200 Hz or less • 1 pulse per reel shaft rotation*2	
	SPRB	Reel shaft pulse input (B-axis)		
	SPS/S	Pulse input sink/source switching		
	SLD	For shield connection		

*1: Based on 1 pulse per 1 mm of measuring roll circumference. Note that this can be compensated in the range of 90 to 180% using the electronic gear function.
*2: Based on 1 pulse per reel shaft rotation. Note that if the material is thick, the reel diameter calculation resolution can be increased by increasing the number of pulses per rotation to 2, 4, 8 or 16 using the parameters.

● Pulse input specification

Item			Specifications
Voltage output	Pulse sensor power		• The rated voltage: 12 V DC • Voltage range: 11.4 to 12.6 V DC • Current value: 130 mA or less*3
	Pulse input power		• The rated voltage: 12 V DC • Voltage range: 11.4 to 12.6 V DC • Current value: 21 mA or less*4
Pulse input	Connection shape		Terminal block
	Input format		Sink/source input switchable
	Input signal voltage		12 V DC
	Input signal current		7 mA, 30 kHz or less
	Input response frequency	Measuring pulse input	30 kHz or less
		Reel shaft pulse input (reel A, reel B)	200 Hz or less
	ON/OFF time width	Measuring pulse input	15 µs or more
		Reel shaft pulse input (reel A, reel B)	0.5 µs or more
	Number of pulses	Measuring pulse input	1 pulse per measuring roll circumference 1 mm*1
		Reel shaft pulse input (reel A, reel B)	1 pulse per reel shaft rotation*2
	Input signal format		Sink: NPN open collector Source: PNP open collector

*1: Based on 1 pulse per 1 mm of measuring roll circumference. Note that this can be compensated in the range of 90 to 180% using the electronic gear function.

*2: Based on 1 pulse per reel shaft rotation. Note that if the material is thick, the reel diameter calculation resolution can be increased by increasing the number of pulses per rotation to 2, 4, 8 or 16 using the parameters.

*3: The total current consumption of the measuring pulse sensor and reel shaft pulse sensors (reels A and B) should be 12 V DC, 130 mA or less.

*4: The input current for the measuring pulse input and reel shaft pulse input (reels A and B) is 12 V DC, 7 mA/1 point.

● Available sensor

Item	Reel shaft pulse sensor (reel A, reel B)	Measuring pulse sensor
Power supply voltage	12 V DC ±10%	12 V DC ±10%
Current consumption	20 mA or less	90 mA or less
Output format	NPN open collector output PNP open collector output	NPN open collector output PNP open collector output
Output capacity	Applied voltage = 20 V or more Sink/source current = 10 mA or more	Applied voltage = 20 V or more Sink/source current = 10 mA or more
Recommended part*1	OMRON E2E-X□E1 proximity switch TL-Q□MC1 proximity switch	OMRON E6A2 rotary encoder E6B2 rotary encoder KOYO ELECTRONICS TRD-J□-RZ rotary encoder

*1: Supply power to the measuring pulse sensor from the 12 V external power supply.

External connection

● Sink input wiring

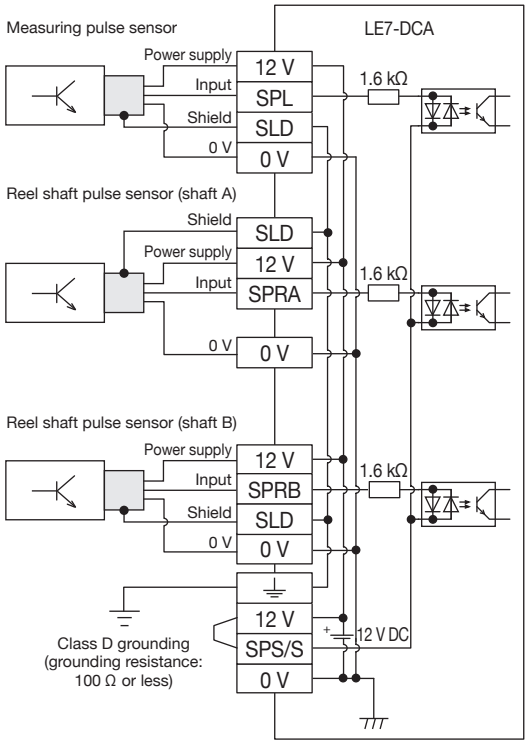

Precautions

- When performing sink input wiring, short the SPS/S terminal and 12 V terminal.
- Do not wire the pulse input sink/source switching terminal (SPS/S) and LE7-40GU-L sink/source switching terminal (S/S) to a common terminal.
- Do not supply power to the 12 V and 0 V terminals from outside.

● Source input wiring

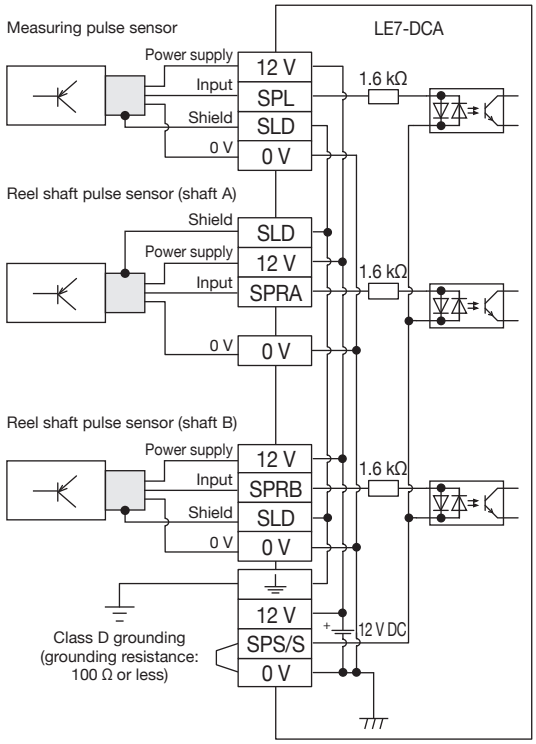

Precautions

- When performing source input wiring, short the SPS/S terminal and 0 V terminal.
- Do not wire the pulse input sink/source switching terminal (SPS/S) and LE7-40GU-L sink/source switching terminal (S/S) to a common terminal.
- Do not supply power to the 12 V and 0 V terminals from outside.

● Terminal layout

NC	NC	0 V	0 V	SPRA	12 V	SLD	SLD	SPL	12 V
NC	NC	0 V	0 V	SPS/S	12 V	⏚	SLD	SPRB	12 V

LE7-CCL network option

The LE7-CCL network option is an extension option for connecting to the LE7-40GU-L tension controller and serving as a remote device station of CC-Link Ver. 1.10/Ver. 2.00.
(This product cannot be used alone.)

Features

- Connects to the LE7-40GU-L tension controller to act as a remote device station for CC-Link V2.
- Can be built into the main unit, enabling more compact, faster installation.

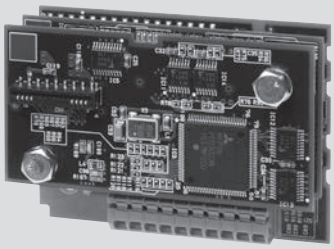

Outline dimensions (mm)

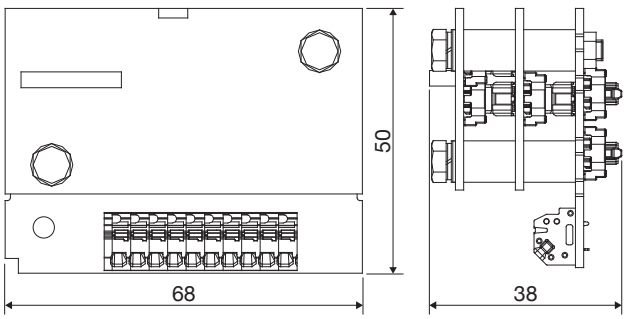

・ Mounting to the LE7-40GU-L tension controller

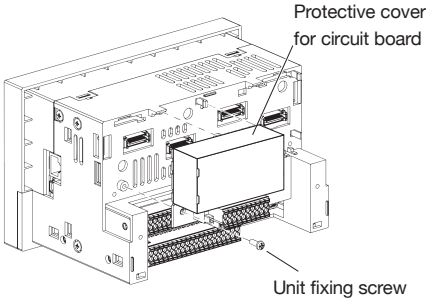

Specifications

● Basic specifications

Item		Specifications
Outline dimensions		50(H) × 68(W) × 38(D) mm
Weight		Approx. 0.2 kg
Power supply	Input	No input (supplied from LE7-40GU-L)
Communication		CC-Link Ver. 1.10/Ver. 2.00 remote device station

● Communication specifications

Item	Specifications
CC-Link supported version	Ver. 2.00 (Ver. 1.10 also supported)*1
Station type	Remote device station
Station No.	1 to 64*2
Transmission speed	156 Kbps/625 Kbps/2.5 Mbps/5 Mbps/10 Mbps
Transmission distance	According to the CC-Link specifications. For details, refer to the manual of the master station.
Number of occupied stations	2 or 4
Setting items	Station number, transmission speed, number of occupied stations, and version setting
Transmission topology	Bus (RS-458)
Transmission format	HDLC compliant
Transmission cable	Cables dedicated to CC-Link (Ver. 1.10 compatible)

*1: When 1 is selected in the version setting, the product runs with CC-Link Ver. 1.10.
When 2 is selected in the version setting, the product runs with CC-Link Ver. 2.00.
*2: The maximum number of remote device stations that can be connected is 42.

● External connection

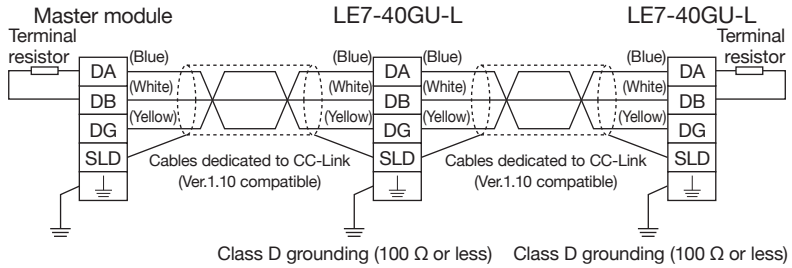

● Terminal layout

⏚	SLD	SLD	NC	DG	DB	DA	DG	DB	DA

LE7-ATT attachment

The LE7-ATT attachment is used to replace the LE-40MT□(-E) or LE-30CT□ with the LE7-40GU-L.

Features

- Insert the attachment into the control panel cut part and attach the LE7-40GU-L to the attachment.

Outline dimensions (mm)

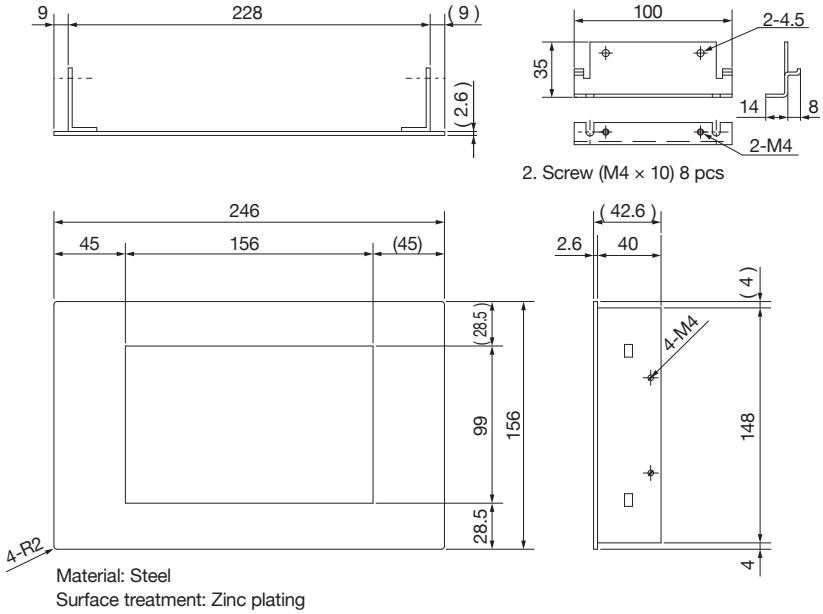

Accessories

1. Mounting plate (2 pcs)

2. Screw (M4 × 10) 8 pcs

Material: Steel
Surface treatment: Zinc plating

・Mounting to the control panel

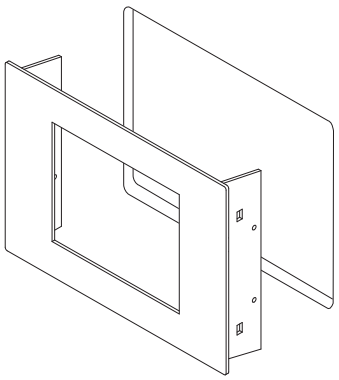

LE-10WTA-CCL/LD-10WTB-CCL
tension controller

Feedback control | Open-loop control

The LE-10WTA-CCL and LD-10WTB-CCL tension controllers offer various methods of tension control in combination with the tension detector input adapter and reel diameter calculation adapter connected to the main unit.

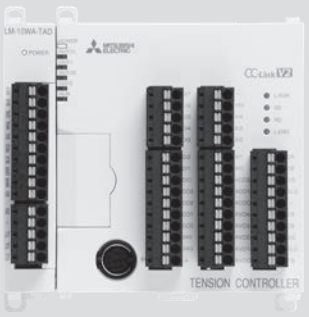

LE-10WTA-CCL tension controller

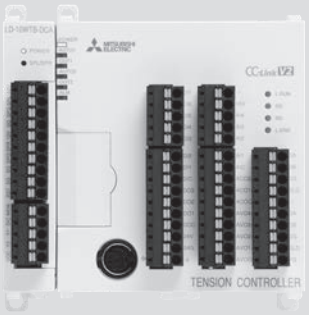

LD-10WTB-CCL tension controller

Features

● Highly advanced tension control

- Perform feedback control or open loop control in accordance with the connected adapter. Highly precise tension controls with high response and stability are achieved by feedforward/feedback complex control brought by the combination of feedback control and open loop control.
- Sophisticated tension control is achieved using the polygonal line taper function and inertia compensation gain automatic calculation based on the reel diameter data from the reel diameter calculation adapter and on the line speed/line acceleration data.
- The polygonal line taper function allows the setting of up to 8 points to enable detailed taper control in accordance with the material and reel diameter.

● Compliance with standards

- EN standard: EC directive/CE marking (EMC directive) compliant
  * For details, refer to the instruction manual.

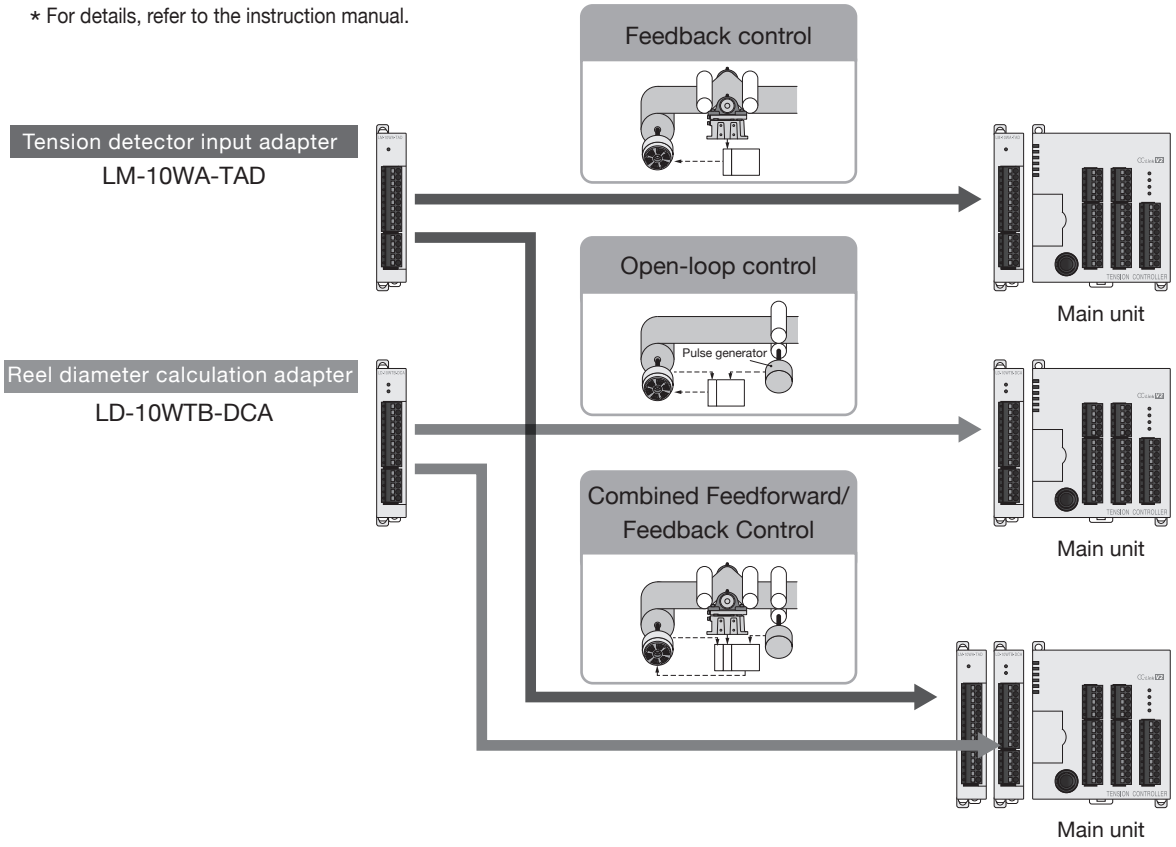

● Tension control for up to 2 shafts

Tension control can be executed for up to 2 shafts when the optional adapter is installed.

● Diverse communication functions

- Because it comes with built-in CC-Link V2 remote device station functionality, it is possible to access the settings, monitor functionality, and correct the tension, including zero adjustment and span adjustment, over the CC-Link using a PLC, such as a master station.
- By connecting the optional LM-10WA-USB USB interface, you can use MX Sheet (Excel® support tool) to read tension values and write setting values through the PC.

● Improved support for motor control

Compatible with the input specifications of the inverter and servo amplifier to facilitate motor control.
The reel rotation speed output can be used as the speed limit when the LD-10WTB-DCA reel diameter calculation adapter is connected.

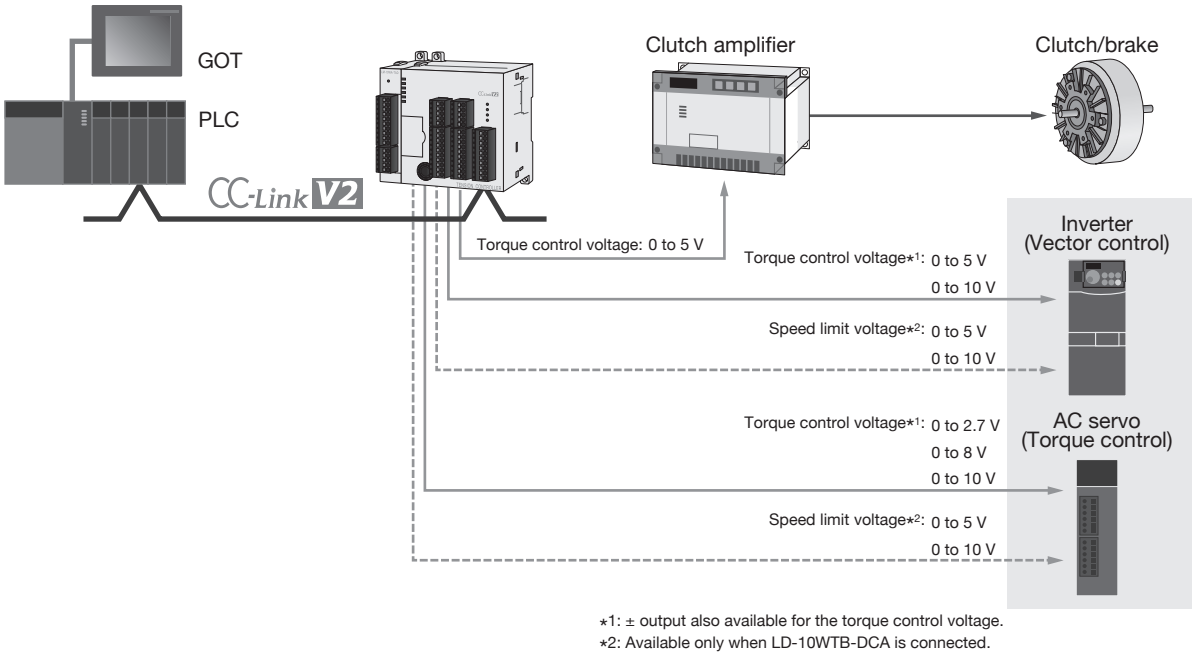

*1: ± output also available for the torque control voltage.
*2: Available only when LD-10WTB-DCA is connected.

● Manipulation and display of settings from the panel using the graphic operation terminal for setting and monitoring

By connecting our GOT 2000 series monitor display and installing the tension controller inside the panel, it is possible to change and monitor the settings through the display on the board surface.

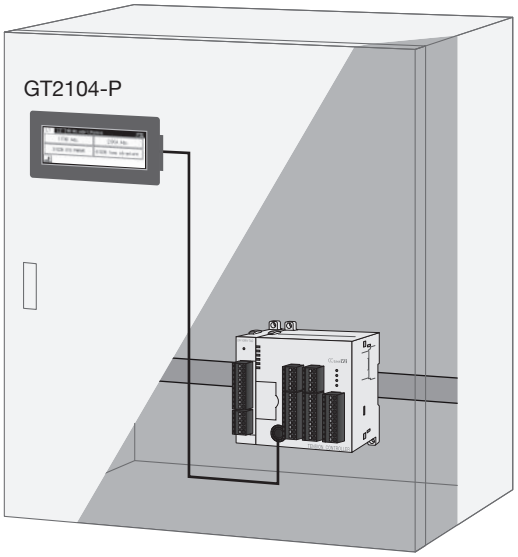

Setting/monitoring display screen example

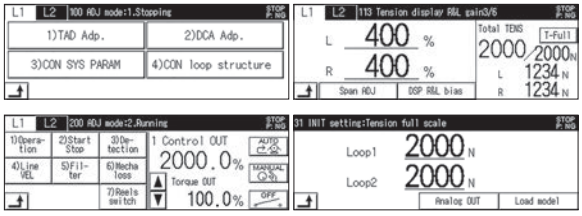

GOT connection

Display main unit
(GT2104-P)

Connection cable
(GT10-C□□R4-8P□)

* GT21-C□□□R4-8P5 cannot be used.

Externally connected devices

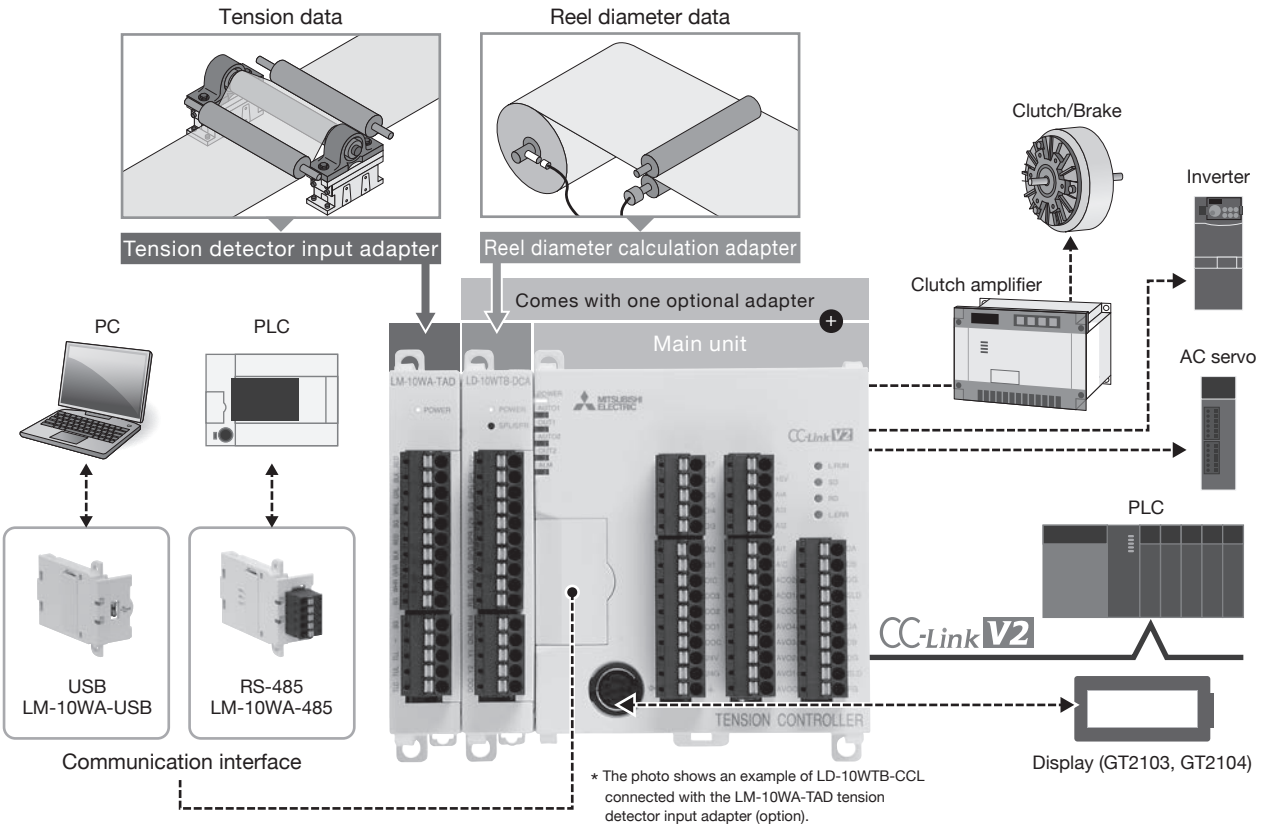

* The photo shows an example of LD-10WTB-CCL connected with the LM-10WA-TAD tension detector input adapter (option).

The LE-10WTA-CCL is supplied with one tension detector input adapter as an accessory.
The LD-10WTB-CCL is supplied with one reel diameter calculation adapter as an accessory.

Outline dimensions (mm)

LE-10WTA-CCL tension controller
LD-10WTB-CCL tension controller

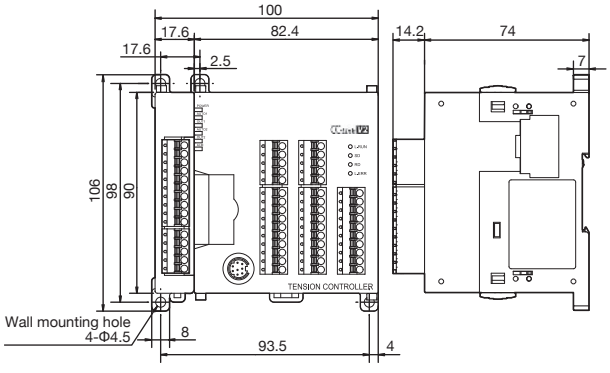

Exterior color: Munsell 0.08 GY/7.64/0.81 equivalent

LM-10WA-TAD tension detector input adapter
LD-10WTB-DCA reel diameter calculation adapter

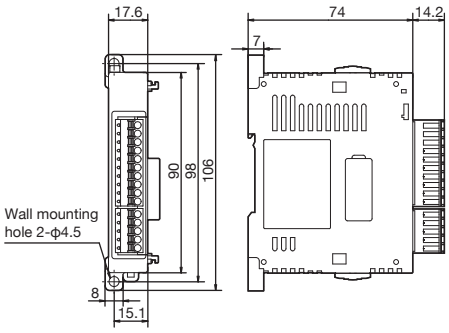

Exterior color: Munsell 0.08 GY/7.64/0.81 equivalent

Specifications

● General specifications

Item		Specifications				
Operating ambient temperature		-5 to +55°C				
Storage ambient temperature		-25 to +75°C				
Operating ambient humidity		35 to 85% RH (no condensation)				
Vibration resistance		Installation	Frequency	Acceleration	Half amplitude	X, Y, Z 10 times in each direction (total 80 minutes each)
		DIN rail installation	10 to 57 Hz	–	0.035 mm	
			57 to 150 Hz	4.9 m/s^2	–	
		Direct installation	10 to 57 Hz	–	0.075 mm	
			57 to 150 Hz	9.8 m/s^2	–	
Impact resistance		98 m/s^2 ··· 3 times each in 3 axial directions				
Power noise withstand level		Noise voltage: 500 Vp-p, noise width 1 μs Measured by a noise simulator with frequency range of 30 to 100 Hz				
Withstand voltage		500 V AC for 1 minute ··· (between all terminals together and the grounding terminal)				
Insulation resistance		5 MΩ or more when measured with 500 V DC insulation resistance tester ··· (between all terminals together and the grounding terminal)				
Grounding		Class D grounding (100 Ω or less, common grounding with strong power field not possible)				
Operating environment		Environment must be free of corrosive or flammable gases as well as conductive dust, and must have low levels of dust.				
Weight	LE-10WTA-CCL	Approx. 370 g				
	LD-10WTB-CCL	Approx. 380 g				
Installation method		DIN rail, wall surface, panel inside installation				

● Function specifications

Item		Specifications
Power supply		24 V DC +20% -15%, power consumption 20 W, inrush current 20 A, 2 ms
Input	Contact input	General-purpose contact input: 7 points
	Analog input (voltage)	General-purpose analog input: 4 points
Output	Power for variable resistor	5 V power for variable resistor
	Contact output	General-purpose contact output: 3 points
	Analog output (voltage)	General-purpose analog output: 4 points
	Analog output (current)	General-purpose analog output: 2 points ∗ In conjunction with analog output (voltage)
Communication	GOT connection	RS-422 9P round DIN connector ∗ Connection cable: GT10-C□□□R4-8P□
	Serial communications	• RS-485: N:N networks, parallel link (FX$_{3U}$, FX$_{3UC}$, FX$_{2N}$, FX$_{2NC}$), MODBUS (RTU), MODBUS (ASCII) • USB: PC (MX Sheet) ∗ Only when the communication interface (option) is connected. CC-Link and RS-485 communications cannot be used simultaneously.
	CC-Link	Can be connected as a remote device station.
	External memory	LD-8 EEPROM (option)

[LM-10WA-TAD tension detector input adapter]

Item		Specifications
Input	Compatible tension sensor	LX-TD/LX7-F tension detector, strain gauge (2 mV/V)
Output	Power supply for tension sensor	+5 V DC, 20 mA
	Tension lower limit contact output	Open collector output, 0.1 A (resistive load), 30 V DC or less
	Tension upper limit contact input	
Weight		Approx. 80 g

[LD-10WTB-DCA reel diameter calculation adapter]

Item		Specifications
Input	Measuring pulse input	Frequency: 30 kHz or less
	Reel shaft pulse input	Frequency: 200 Hz or less
	Reel diameter reset input	ON current: Approx. 7 mA
	Memory hold input	
Output	Encoder power supply	12 V DC ±0.5 V 90 mA or less
	Proximity switch	12 V DC ±0.5 V 20 mA or less
	Timing detection output 1 to 2	Open collector output, 0.1 A (resistive load), 30 V DC or less
Weight		Approx. 90 g

External connection

Main unit

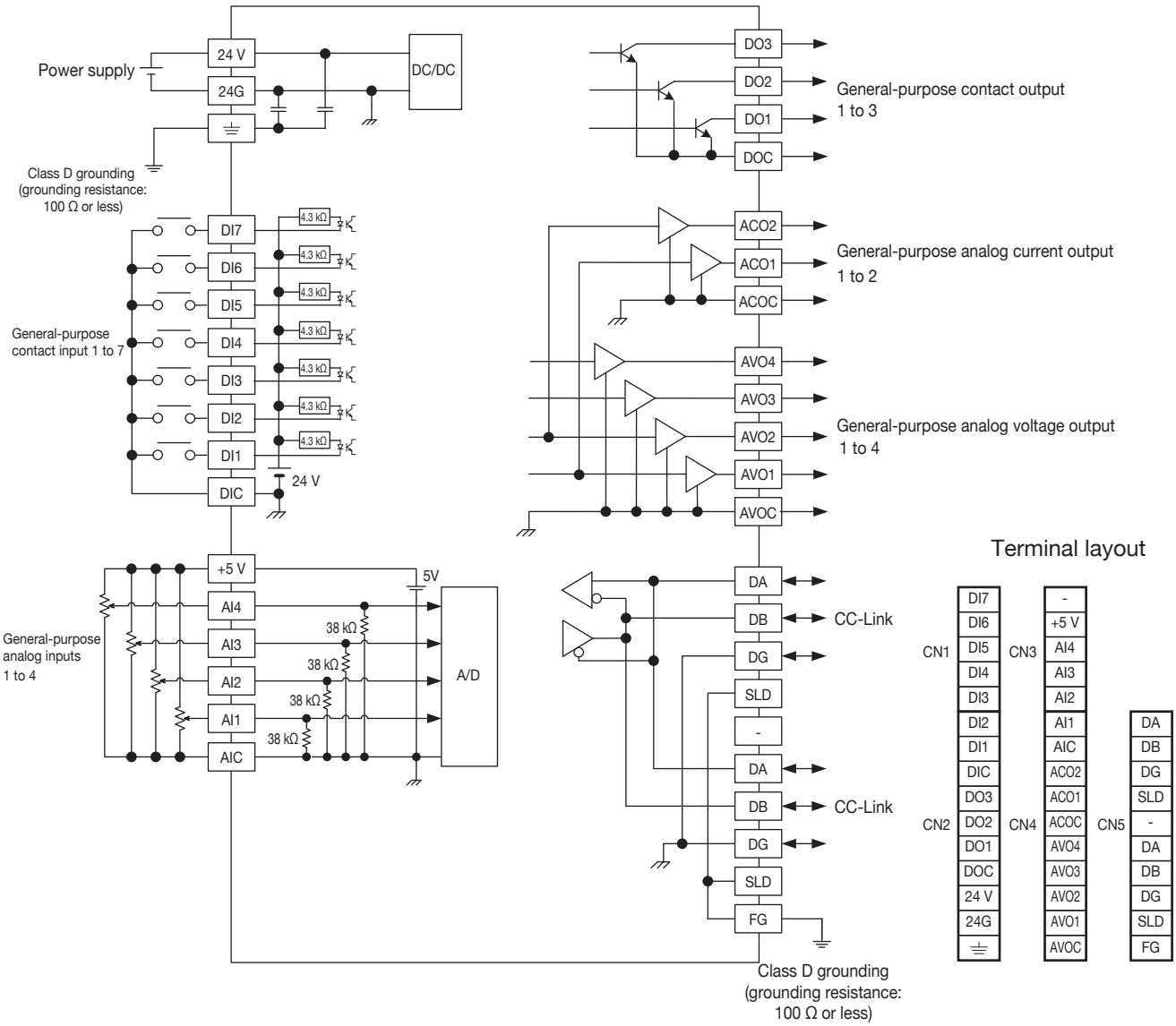

Terminal layout

LM-10WA-TAD
tension detector input adapter

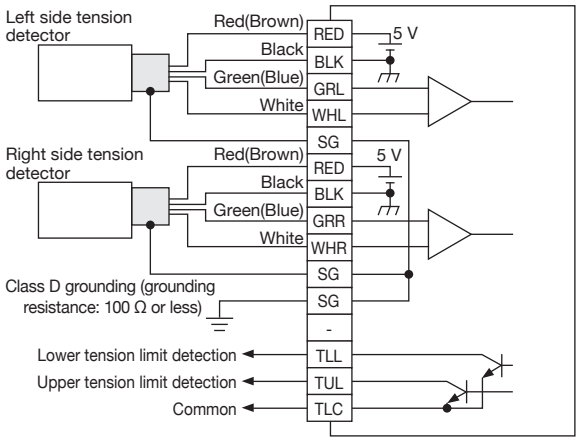

LD-10WTB-DCA
reel diameter calculation adapter

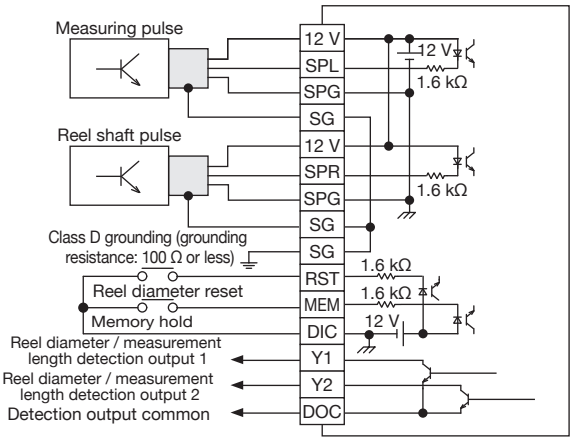

LE-30CTN tension controller

Feedback control

The LE-30TN tension controller receives the signal from the LX7-F/LX-TD or LX-TD928 tension detector to automatically control the material tension during unwinding, intermediate shaft, and winding of long materials. It generates a control voltage of 0 to 24 V for the powder clutch/brake and generates 0 to 5 V torque command voltage for the AC servo amplifier.

Features

- Menu function as a standard feature. Allows storage and readout of eight kinds of operation data.
- Quick and easy function selection with function keys (F1 to F4).
- Uses a dot matrix type LCD display.
- Language displayed on the LCD display can be selected between Japanese, English, and simplified Chinese by the DIP switch.
- Automatic decision of polarity of tension detector. This enables wiring without worrying about compression/ tension use.
- Auto zero/span adjustment method is adopted, eliminating the need for adjustment.
- Operates on a wide range of supply voltage from 100 V to 240 V AC.

● Compliance with standards

- EN standard: EC directive/CE marking compliant
  For details, refer to the instruction manual.

Panel screen configuration

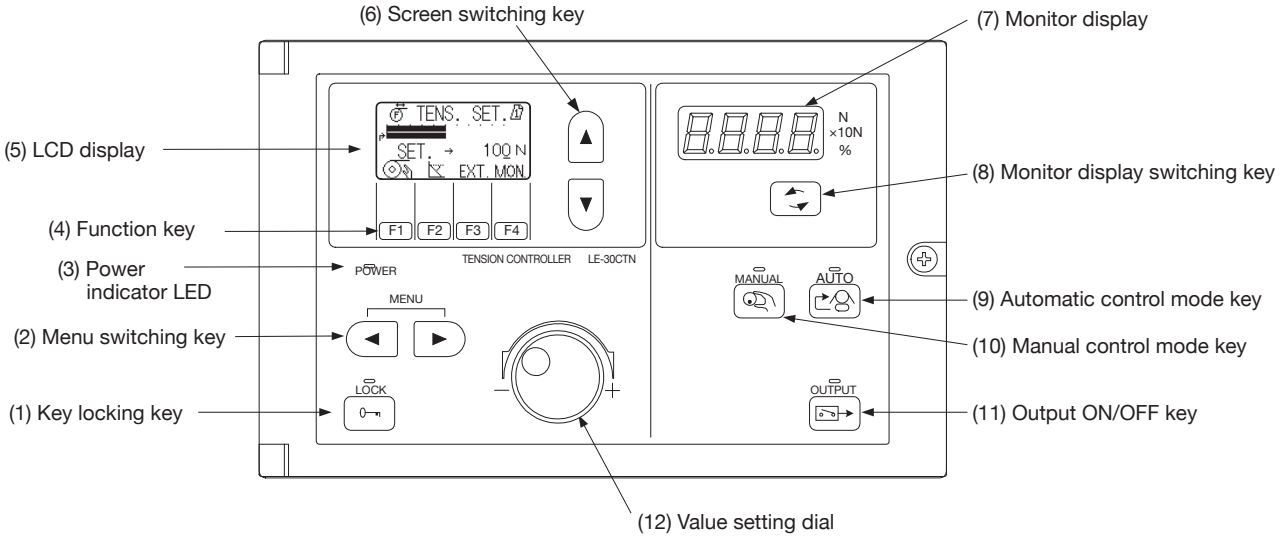

(1) Key locking key ..... Disables other keys to prevent accidental changes to the setting values.
(2) Menu switching key ..... Reads the data stored in the menu.
(3) Power indicator LED ..... Lit when the power is turned on. There is no power switch on the main unit. Provide a switch that opens and closes all phases on the wiring side of the power supply, and open and close all phases.
(4) Function key ..... Switches the screen on the LCD display. The functions of these keys vary on different screens.
(5) LCD display ..... Dot matrix type LCD display. Displays various setting values, setting items, control status etc.
(6) Screen switching key ..... Switches the screen on the LCD display.
(7) Monitor display ..... Displays the tension and output values.
(8) Monitor display switching key ..... Switches among the items to be displayed on the monitor display (7).
(9) Automatic control mode key..... Selects the automatic control mode.
(10) Manual control mode key ..... Selects the manual control mode.
(11) Output ON/OFF key ..... Turns on/off the control output.
(12) Value setting dial ..... Dial to set various setting values.

● Sample screen switching

- Switching by item number

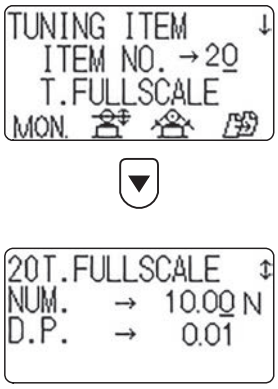

Select the item number using the value setting dial, and press the display switch key to go to the screen that corresponds to the item number.

- Switching by function key

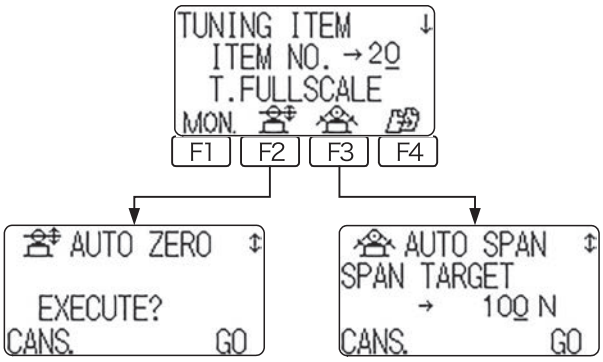

Press the function key (F1 to F4) to go to the screen that corresponds to the pictorial symbol that appears above each function key.
(The functions of these keys vary on different screens.)

Externally connected devices

Some of the devices that can be connected to the input/output terminals of this model of tension controller include the following.
Tension detector, actuator, and some of the signal input switches are essential to the system; other components are connected as necessary.

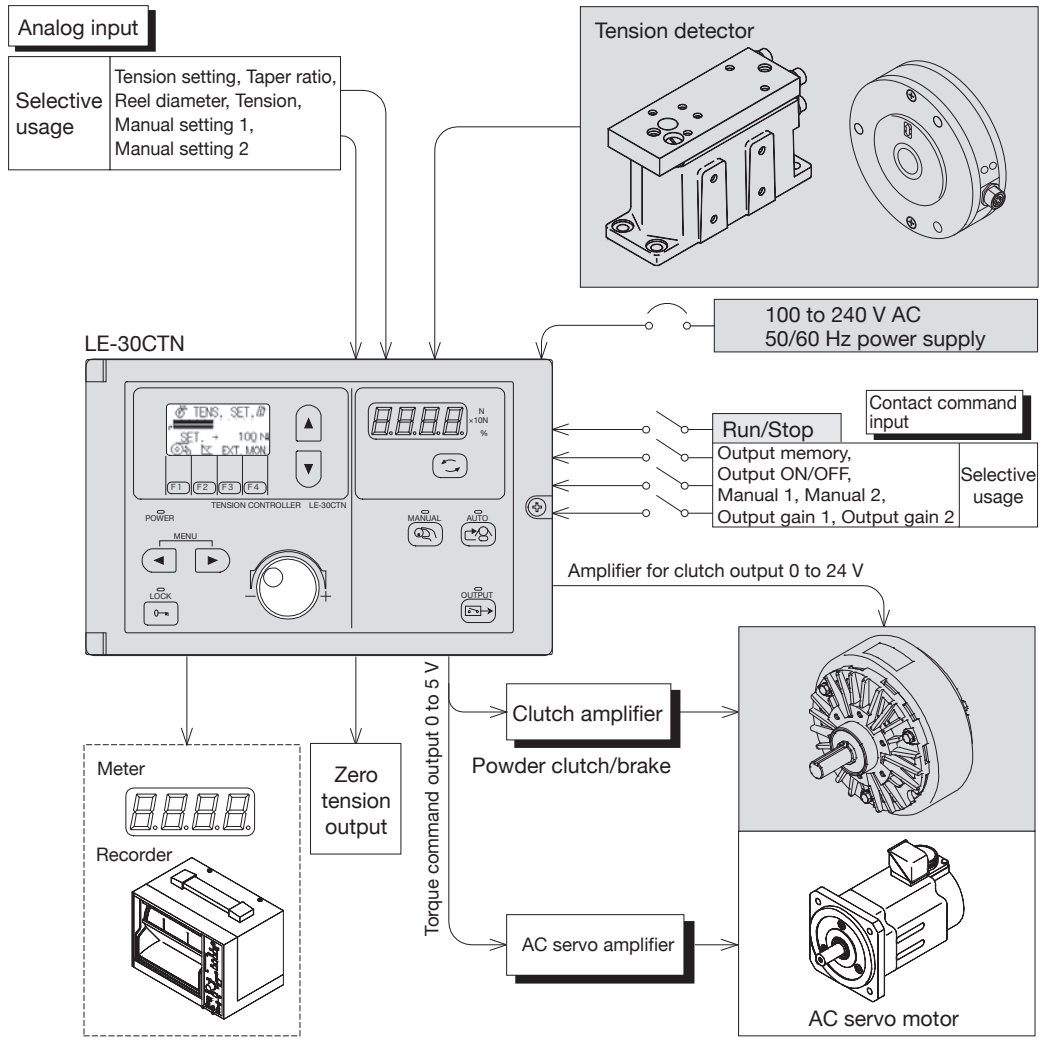

Outline dimensions (mm)

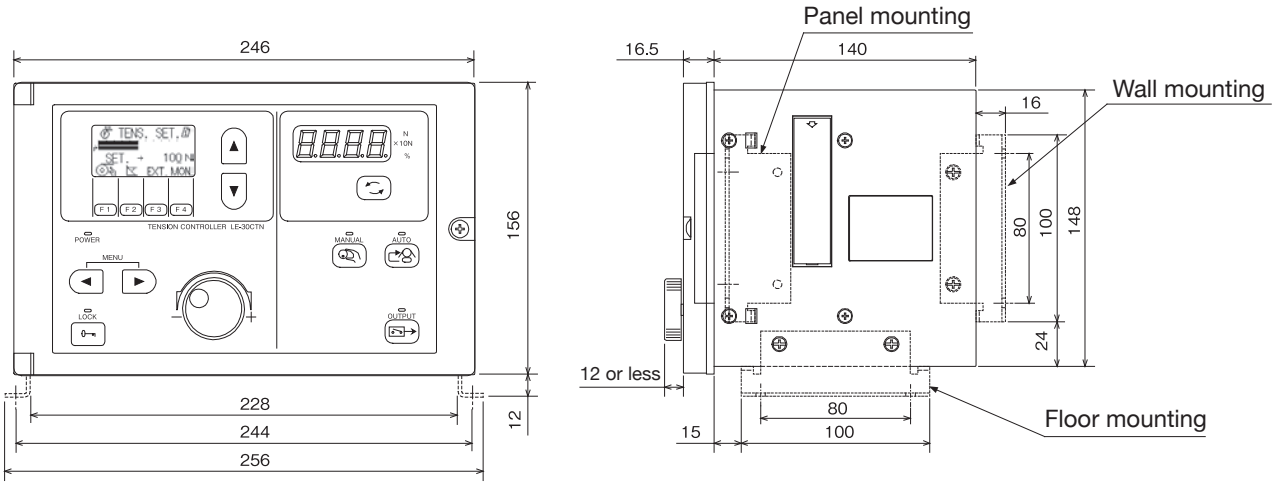

Panel cut dimensions

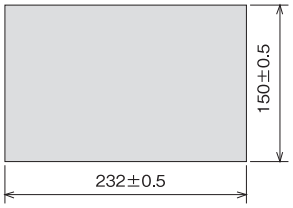

Accessories: Main unit mounting plate: 1 pair,
Body/mounting foot fixing screws (M4 × 10): 4 pieces
Exterior color: Munsell 7.5 GY 7.5/1

Specifications

Item		Specifications	
Power supply	Input	100 to 240 V AC (-15 to +10%), 50/60 Hz, Power consumption: 400 VA Power supply fuse: 250 V T5AH × 2 built-in, Inrush current: 30 A 300 ms Instantaneous power failure allowable time: 10 ms	
	Output	DC 5 V tension detector power supply You can connect one LX-TD/LX7-F tension detector on each side.	
		Service power supply for external variable rsistor: 5 V DC, 50 mA or less 5 V DC, 50 mA or less	
Contact signal	Input	Contact input common terminal	8 V DC 4.5 mA/1 point Internal power feeding
		Run/stop: ON = automatic operation, OFF = stop	
		Assignable to the following functions. - Output memory, output gain 1, output gain 2, output ON-OFF, manual output 1, and manual output 2	Assign the functions by parameters.
	Output	Zero tension detection output: Setting value 0 to 2000 N (2000 × 10 N) 250 V AC, 0.5 A or 30 V DC, 0.5 A	
Analog signal	Input	Tension Detector Input When only one LX-TD tension detector is used, it is necessary to short-circuit GR and WH of the other side that will not be used. The compression/tensile load is determined automatically.	
		Analog input common terminal	
		Select from the following functions. Tension setting signal, reel diameter signal, external tension signal, taper ratio setting signal, manual setting signal 1, manual setting signal 2 Voltage signal of 0 to 5 V DC or 10 kΩ variable resistor	Assign the functions by parameters.
	Output	Analog output common terminal	
		Control output 0 to 5 V DC clutch amplifier, AC servo amplifier	Load resistance: 1 kΩ or more
		Tension monitor/tension setting monitor output 0 to 5 V DC Set functions using the DIP switches.	
		24 V DC powder clutch/brake 0 to 24 V DC, 3 A or less	
Weight		Approx. 3.5 kg	
Installation method		Floor surface, wall surface, and panel mounting	
Major functions		Display type……Dot matrix LCD Tension display……1 to 2000 N (digital + bar graph), output % display Constant setting……Numerical value setting using rotary type pulser Screen switching……Switching by item number setting or function key Control function……Stop timer, stop gain, output correction, taper control, weak excitation function, fixed output setting, automatic judgment of polarity of tension detector, auto zero/span adjustment, menu registration/reading function	
Operating ambient temperature		0 to +40°C	
Operating ambient humidity		35 to 85% RH (no condensation)	
Vibration resistance		10 to 55 Hz, 0.5 mm (up to 4.9 m/s^2) ··· 2 hours each in 3 axial directions	
Impact resistance		98 m/s^2 3 times each in 3 axial directions	
Power noise withstand level		Noise voltage 1000 Vp-p, using a noise simulator with noise width of 1 μs and frequency of 30 to 100 Hz	
Withstand voltage		Overvoltage category II 1500 V AC for 1 minute (between all terminals together and the grounding terminal)	
Insulation resistance		5 MΩ or more when measured with 500 V DC insulation resistance tester ··· Measured all terminals together and the grounding terminal	
Grounding		Class D grouding, ground resistance of 100 Ω or less (common grounding with strong power field not possible)	
Operating environment		Environment must be free of corrosive gases, flammable gases as well as conductive dust, and must have low levels of dust.	

Parameter list

Setting items		Unit	Setting range		Initial setting
			Minimum	Maximum	
Tension	Tension setting value	N, ×10 N	1	Full scale tension	200
	Full scale value	N, ×10 N	1	2000	500
	Decimal point	-	0.01, 0.1, 1		1
	Zero adjustment	-	0	0	0
	Span adjustment set value	N, ×10 N	1 to full scale tension (1/3 or more of full scale value is required.)		500
	Manual zero calibration	N, ×10 N	–999	+999	0
	Manual span calibration	%	50	300	100
	Zero tension setting	N, ×10 N	0	2000	0
Tension display filter time constant		s	0.2 to 4.0		2.0
Tension output filter time constant		s	0.2 to 4.0		2.0
Manual setting value 1		%	0	100	20
Manual setting value 2		%	0	100	20
Taper ratio (internal reel diameter)		%	0	80	0
Taper ratio (external reel diameter)		%	0	100	0
Gain 1		%	5	400	100
Gain 2		%	5	400	100
Stop timer		s	0.0	30.0	0.0
Stop gain		%	5	400	100
Weak excitation setting value		%	0	50	0
Control gain	Proportional gain	%	0	100	50
	Integral time	%	1	100	50
	Addition gain	%	0	100	0
	Addition dead band width	%	0	50	50
Selection item	MI1 contact input setting	-	Output memory, output ON/OFF, manual output 1, manual output 2, output gain 1, output gain 2		None
	MI2 contact input setting				None
	MI3 contact input setting				None
	AI1 analog input setting	-	Tension setting, taper ratio, reel diameter manual output setting 1, manual output setting 2, external tension		None
	AI2 analog input setting				None
Extended screen setting 1		-	10	53	0
Extended screen setting 2			10	53	0
Password setting		-	0	30000	0

External connection

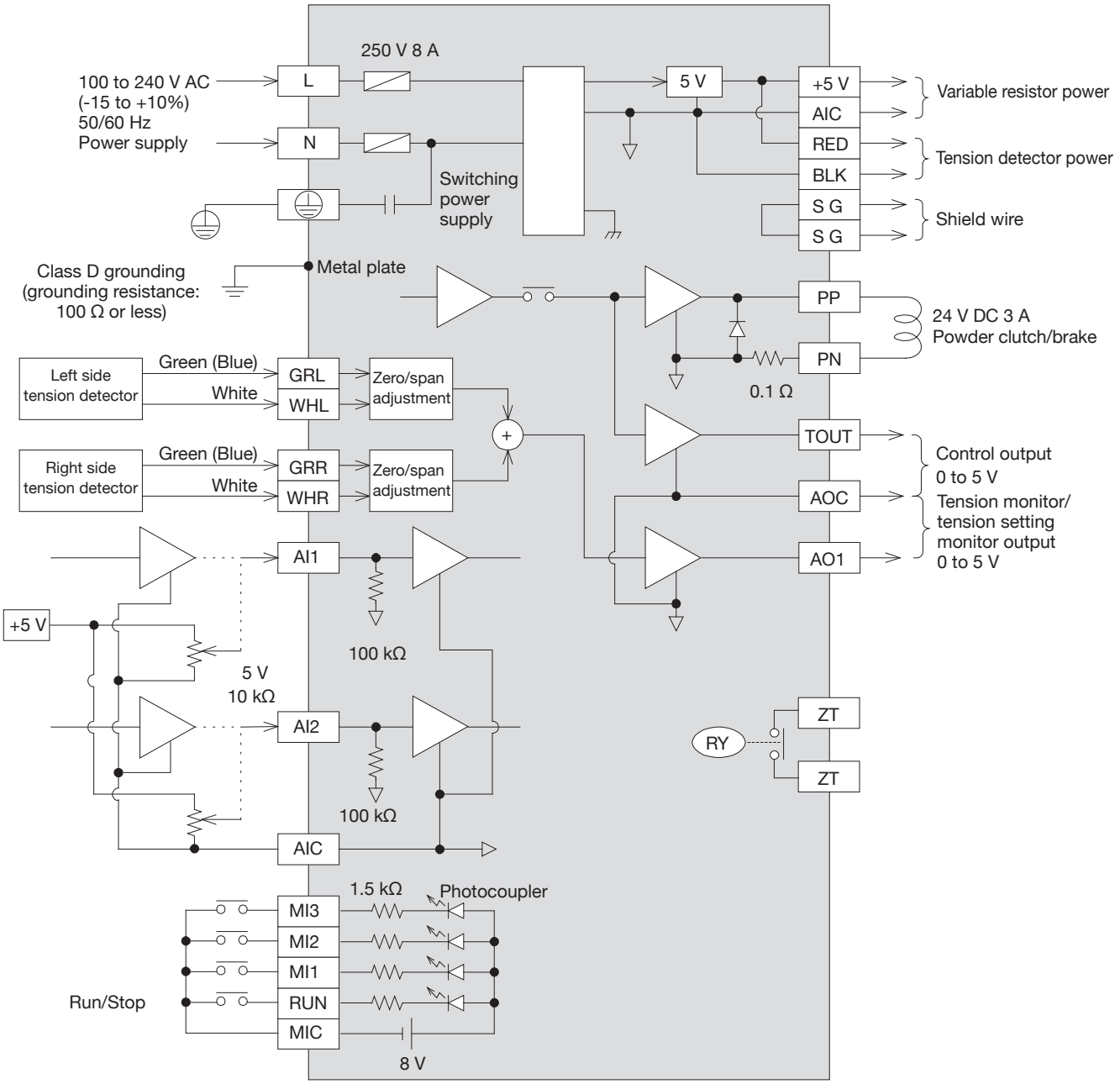

● Terminal layout

L	•	N	•	⏚	•	ZT	•	PP	MIC	
•	•	•	•	•	•	ZT	•	PN	RUN	

MI1	MI3	+5V	AI1	GRL	RED	BLK	GRR	AOC	AO1	
MI2	•	AIC	AI2	WHL	SG	SG	WHR	TOUT	•	

● Example of combination with servo motor

By using the output signals [TOUT] and [AOC] for control, these controllers can be used in combination with an AC servo motor that allows torque control.

- Wiring (Example)

  The following signals are input to the torque setting terminal and speed limit terminal of the servo amplifier.

	Torque setting terminal	Speed control terminal
During operation and normal stop	[TOUT]-[AOC] signal of LE-30CTN	Variable resistor signal for upper limit speed setting
During emergency stop	Variable resistor signal for braking torque setting	0 V

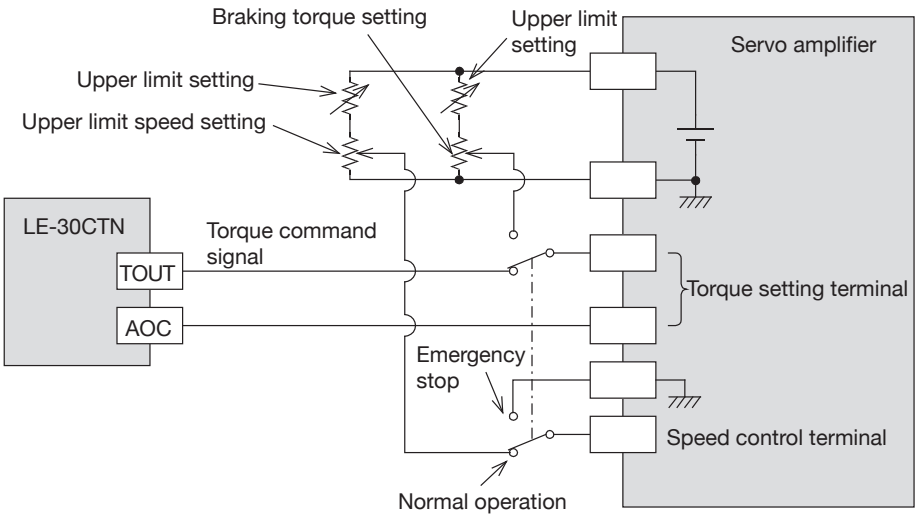

- Setting

  Make the following settings for the servo motor.

  (1) Control method setting ····· Set the torque control method.

  (2) Output torque setting ····· Make settings so that the output torque of the servo motor is the rated torque when the torque command signal is 5 V.

LE-40MTA(-E)/LE-40MTB(-E)
tension controller

Feedback control

The LE-40MTA(-E)/LE-40MTB(-E) tension controller is used in combination with the LX7-F/LX-TD/LX-TD-928 tension detector to automatically control the material tension during unwinding, intermediate shaft, and winding of long materials.
Such actuators as powder clutches/brakes, servo motors (torque mode), and air clutches/brakes can be used with these controllers, and they come with a built-in clutch amplifier and auxiliary power supply for clutches/brakes that operate on 24 V DC.

Features

- Operates on a wide range of supply voltage from 100 V to 240 V AC.
- It uses 2 types of displays, large LCD (2 lines × 40 characters) and an LED (7 segments). It features easier viewing with the simultaneous display of tension and output, display of tension in bar graph format, and display of control status in characters.
- Auto zero/span adjustment method is adopted, eliminating the need for adjustment. Automatic adjustment of control gain is possible.

LE-40MTA tension controller

LE-40MTB tension controller

● LE-40MTA(-E): Standard type

- Since variable resistors are adopted, the customer can operate intuitively and easily as before.
  LE-40MTA: Japanese version
  LE-40MTA-E: English version

● LE-40MTB(-E): High-function type

- The rotary type pulser makes it easy to set numerical values.
- Connection with CC-Link is possible.
  Uses FX2N-32CCL (Interface block), LE-60EC (Extension block extension cable), and FX2N-CNV-BC (Connector conversion adapter).
- Setting values can be selected on the menu screen.
  Seven kinds of material names can be registered, eight kinds of menus can be used to register the setting values for each material, and the setting values can be read by one-touch operation.
  LE-40MTB: Japanese version
  LE-40MTB-E: English version

Panel screen configuration

● LE-40MTA

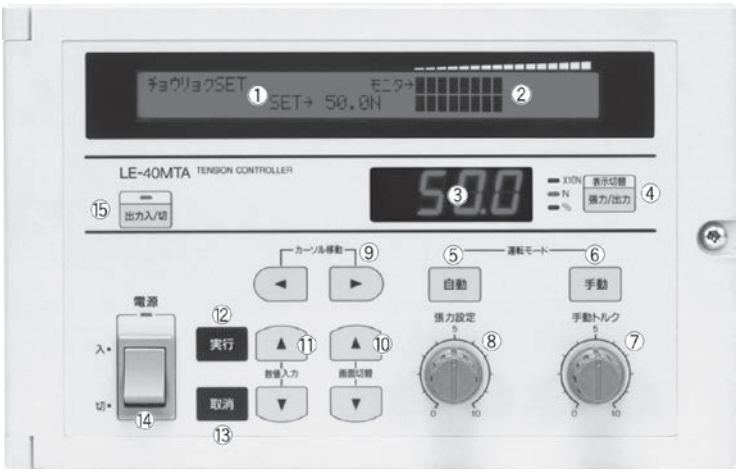

● LE-40MTB

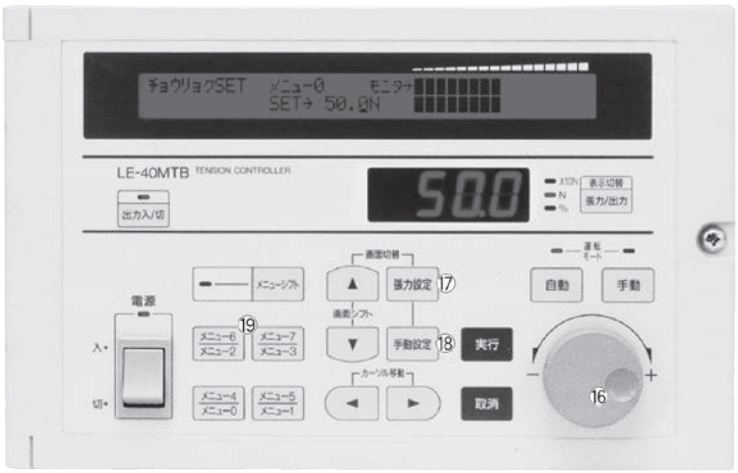

(1) LCD display ..... 2-row × 4-digit LCD display. Monitors setting values and control states, and displays control states, etc.
(2) Bar graph ..... Displays the percentages (%) of control tension and tension setting as a bar graph on a part of the LCD display.
(3) LED display ..... Displays the tension and output values. The switch in (4) is used to switch the display mode.
(4) LED display switch ..... Switches the display mode on the LED.
(5) (6) Mode switch ..... Automatic/manual mode switch.
(7) Manual torque setting variable resistor (type A) ... Sets the output torque during manual control.
(8) Tension setting variable resistor (type A) ..... Sets the control tension in automatic control.
(9) Cursor movement switch ..... Moves the cursor or scrolls the screen horizontally on the LCD setting display screen.
(10) Screen change switch ..... Switches the screen to the next screen or the previous screen on the LCD setting display screen.
(11) Value input switch (type A) ..... Sets the setting values other than tension setting and manual torque setting.
(12) (13) Execution/cancellation switch ..... Executes/cancels the constant setting operation, or decides/cancels the setting value.
(14) Power supply
(15) Output ON/OFF switch
(16) Pulser dial (type B) ..... Used to set various setting values. Turning it clockwise increases the number and turning it counterclockwise decreases the number.
(17) Tension setting switch (type B) ..... Switches the LCD setting display screen to the tension setting screen by one-touch operation.
(18) Manual setting switch (type B) ..... Switches the LCD setting display screen to the manual setting screen by one-touch operation.
(19) Menu select switch (type B) ..... Used to select a menu number when registering a setting value or reading the registered setting.

Externally connected devices

Some of the devices that can be connected to the input/output terminals of this model of tension controller include the following.
Tension detector, actuator, and some of the signal input switches are essential to the system; other components are connected as necessary.

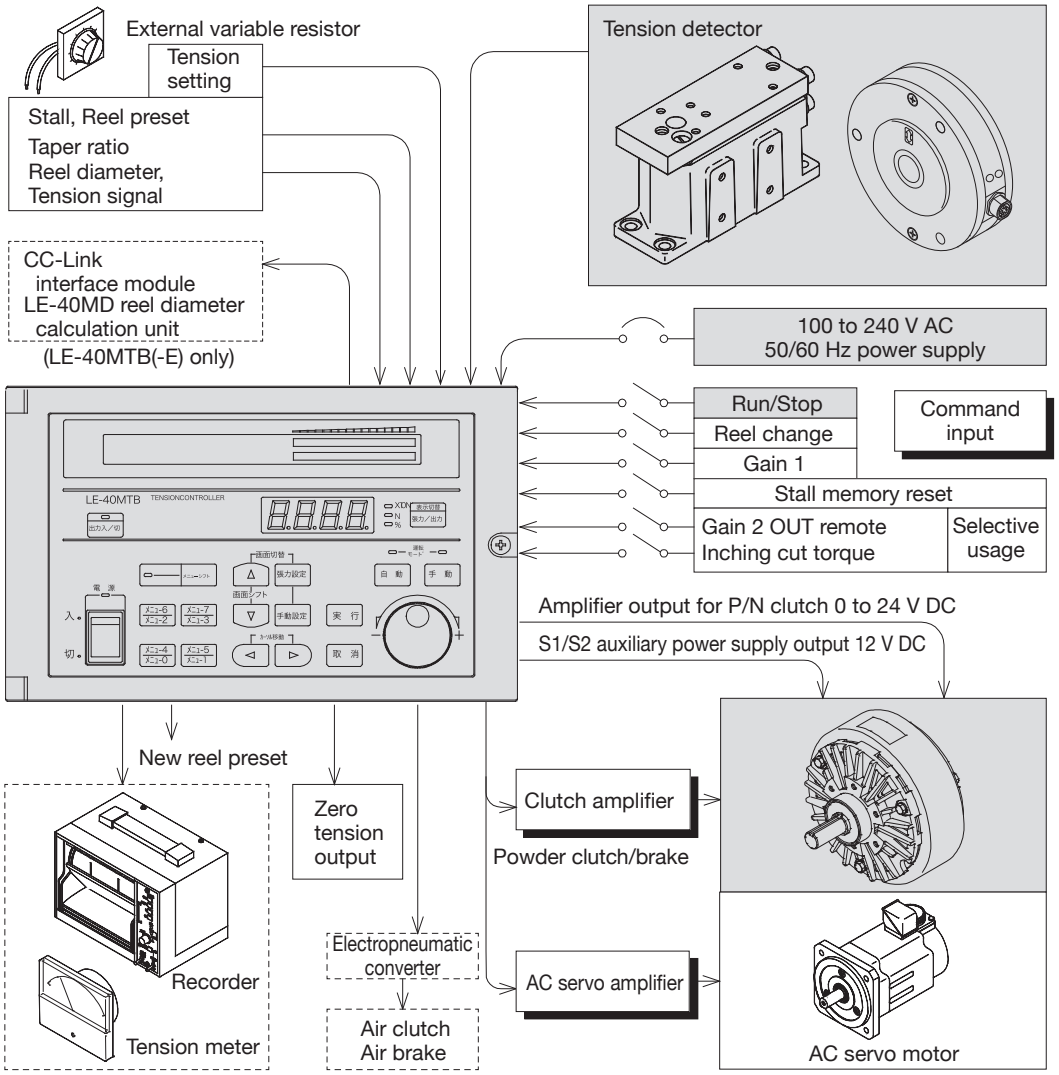

Outline dimensions (mm)

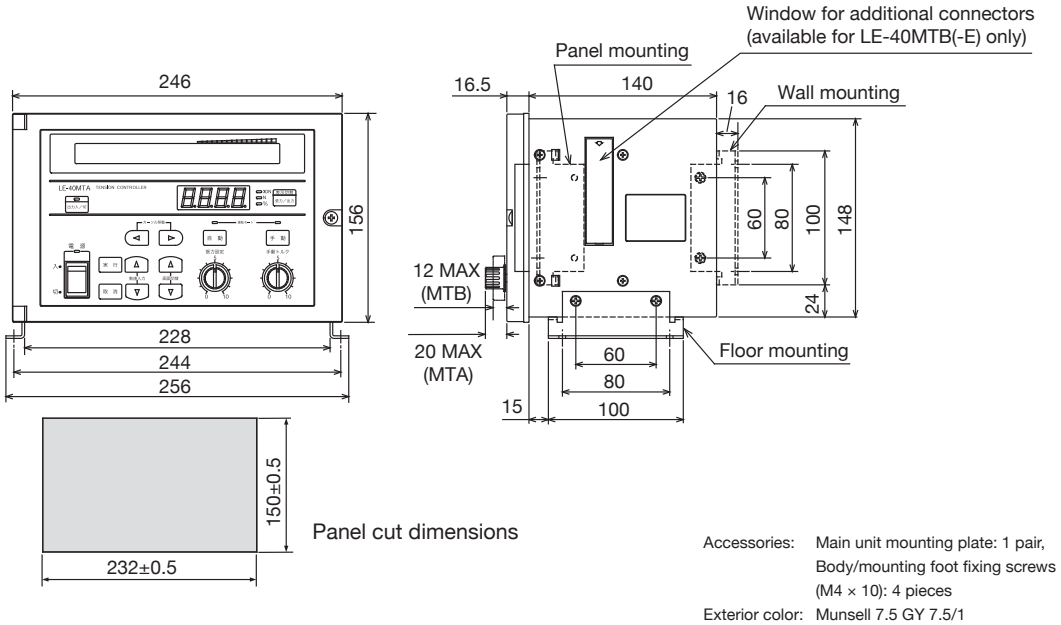

Accessories: Main unit mounting plate: 1 pair,
Body/mounting foot fixing screws
(M4 × 10): 4 pieces
Exterior color: Munsell 7.5 GY 7.5/1

Specifications

Item		Specifications	
Power supply	Input	100 to 240 V AC (-15 to +10%), 50/60 Hz, Power consumption: 400 VA, Power supply fuse: 250 V 8 A built-in, Inrush current of 30 A 300 ms	
	Output	Auxiliary power supply ····· 12 V DC, 2 A, 10-second rating Tension detector power supply ····· Up to 2 LX-TD/LX7-F tension detectors can be connected. Service power supply for external variable resistor ···· 5 V DC, 50 mA or less	
Contact signal	Input	Run/stop·····ON = automatic operation, OFF = stop Reel change signal·····OFF = A reel, ON = B reel Gain 1 operation signal ·····Gain 1 enabled during ON Stall memory reset signal General-purpose contact input signal (2 points)·····Assignable to the following functions. Gain 2 operation, inching, lower torque limit at material cut, output ON/OFF Switching between inside and outside of tension setting(*) (*: Applicable to LE-40MTB(-E) only)	8 V DC 4 mA/1 point Internal power feeding
	Output	Zero tension detection output·····Set value 0 to 1999 N (1999 × 10 N), 250 V AC, 0.5 A or 30 V DC, 0.5 A	
Analog signal	Input	2 tension detectors input····· 1 or 2 LX-TD/LX7-F tension detectors are used (LX7-F type tension detector should be used in a pair).	
		External tension setting·····0 to full scale tension at 0 to 5 V DC General-purpose analog input signal (2 points) ·····Assignable to the following functions. - External taper reel diameter signal····· Minimum diameter to maximum diameter at 0 to 5 V - External stall setting····· 0 to 100% output torque at 0 to 5 V - External new reel preset····· 0 to 100% output torque at 0 to 5 V - Taper ratio external setting····· At 0 to 5 V - Internal reel diameter taper····· 0 to 80% - External reel diameter taper····· 0 to 100% - Auxiliary tension detection input····· 0 to full scale tension at 0 to 5 V	Recommended variable resistor 5 V 10 kΩ
	Output	Clutch amplifier output····· 24 V DC Control signal output - In powder mode····· 0 to 5 V DC Load resistance: 1 kΩ or more - In AC servo mode ····· 0 to ±5 V DC Load resistance: 1 kΩ or more New reel preset output····· 0 to 5 V DC Load resistance: 1 kΩ or more Tension monitor output····· 0 to 5 V DC Load resistance: 1 kΩ or more Electro-pneumatic regulator control signal output····· 4 to 20 mA DC Load resistance: 470 Ω or less	
Weight		Approx. 3.5 kg	
Installation method		Floor surface, wall surface, and panel mounting	
Major functions		LE-40MTA (-E)	LE-40MTB (-E)
		Display method: LCD (2 rows × 40 digits) + 7-segment LED Tension display: 1 to 1999 N (digital + bar graph), output % display Control functions: Start/stop timer, stop gain, torque correction at acceleration/deceleration, taper control, mechanical loss correction, new reel preset setting, auto zero/span adjustment, auto gain adjustment, cut torque setting	
		Digital value setting: Setting with Up/Down keys Tension setting: Use of variable resistor	Digital value setting: Rotary type pulser Tension setting: Rotary type pulser Menu registration/read function CC-Link network link (option)
Environmental specifications	Operating ambient temperature	0 to 40°C	
	Operating ambient humidity	35 to 80% RH (no condensation)	
	Vibration resistance	10 to 55 Hz, 0.5 mm (up to 4.9 m/s^2), 2 hours each in 3 axial directions	
	Impact resistance	98 m/s^2 3 times each in 3 axial directions	
	Power noise withstand level	Noise voltage 1000 Vp-p, using a noise simulator with noise width of 1 μs and frequency of 30 to 100 Hz	
	Withstand voltage	1500 V AC for 1 minute (between all terminals together and the grounding terminal)	
	Insulation resistance	500 V DC, 5 MΩ or more when measured with insulation resistance tester	
	Grounding	Class D grounding, grounding resistance 100 Ω or less	
	Operating environment	Environment must be free of corrosive gases, flammable gases as well as conductive dust, and must have low levels of dust. Free from rain and water drops.	

Parameter list

Setting		Setting value		Unit	Setting range		Initial Setting
					Minimum	Maximum	
Tension	Tension setting	Tension setting value (N)		N	0.1, 1, 10 to full scale tension		200
		Tension setting value (× 10 N)		N	0.01, 0.1, 1 to full scale tension		20.0
	Full scale tension	Full scale value		-	1	1999	500
		Decimal point (N)		-	Select 0.1, 1.0, or 10.		×1
		Decimal point (x 10 N)		-	Select 0.01, 0.1, or 1.		×0.1
	Tension detector	Zero adjustment		-	0	0	0
		Span adjustment target value		N	1 digit to full scale tension (1/3 of full scale value is required)		500
				×10 N			50.0
	Filter	Display time constant		s	Select 1/4, 1/2, 1, 2, or 4.		1/2
		TMO output time constant		s			1/2
	Zero tension detection output	Zero tension setting (N)		N	0	1999	0
		Zero tension setting (× 10 N)		×10 N	0	1999	0
Manual setting		Manual set value		%	0	100	20
Taper	Linear line taper	Taper ratio (internal reel diameter)		%	0	80	0
		Taper ratio (external reel diameter)		%	0	100	0
	Broken line taper	Corner 1 to 4		mmϕ	0	2000	0
		Taper 1 to 4		%	0	100	0
Start	Stall	Stall setting value		%	0	100	20
	Timer	Start timer		s	0.0	10.0	4.0
Output gain		Gain 1		%	5	400	100
		Gain 2		%	5	400	100
New reel/old reel switching		New reel preset value		%	0	100	50
		Preset timer		s	0.0	30.0	4.0
		Cutting torque		%	0	100	10
Stop control		Stop timer		s	0.0	100.0	6.0
		Stop gain		%	5	400	100
		Stop bias		%	0	50	0
Mechanical loss correction		Reel A setting	Powder mode	%	0	100	0
			AC servo mode	%	-50	100	0
		Reel B setting	Powder mode	%	0	100	0
			AC servo mode	%	-50	100	0
Reel diameter		Minimum diameter setting		mmϕ	0	2000	100
		Maximum diameter setting		mmϕ	Minimum set diameter	2000	1000
Control gain	Manual setting	Proportional gain		%	0	100	50
		Integral time		%	1	100	50
		Dead band gain		%	0	100 - proportional gain	0
		Dead band width		%	0	100	50
	Auto gain setting	Addition torque		%	0	100	20

External connection

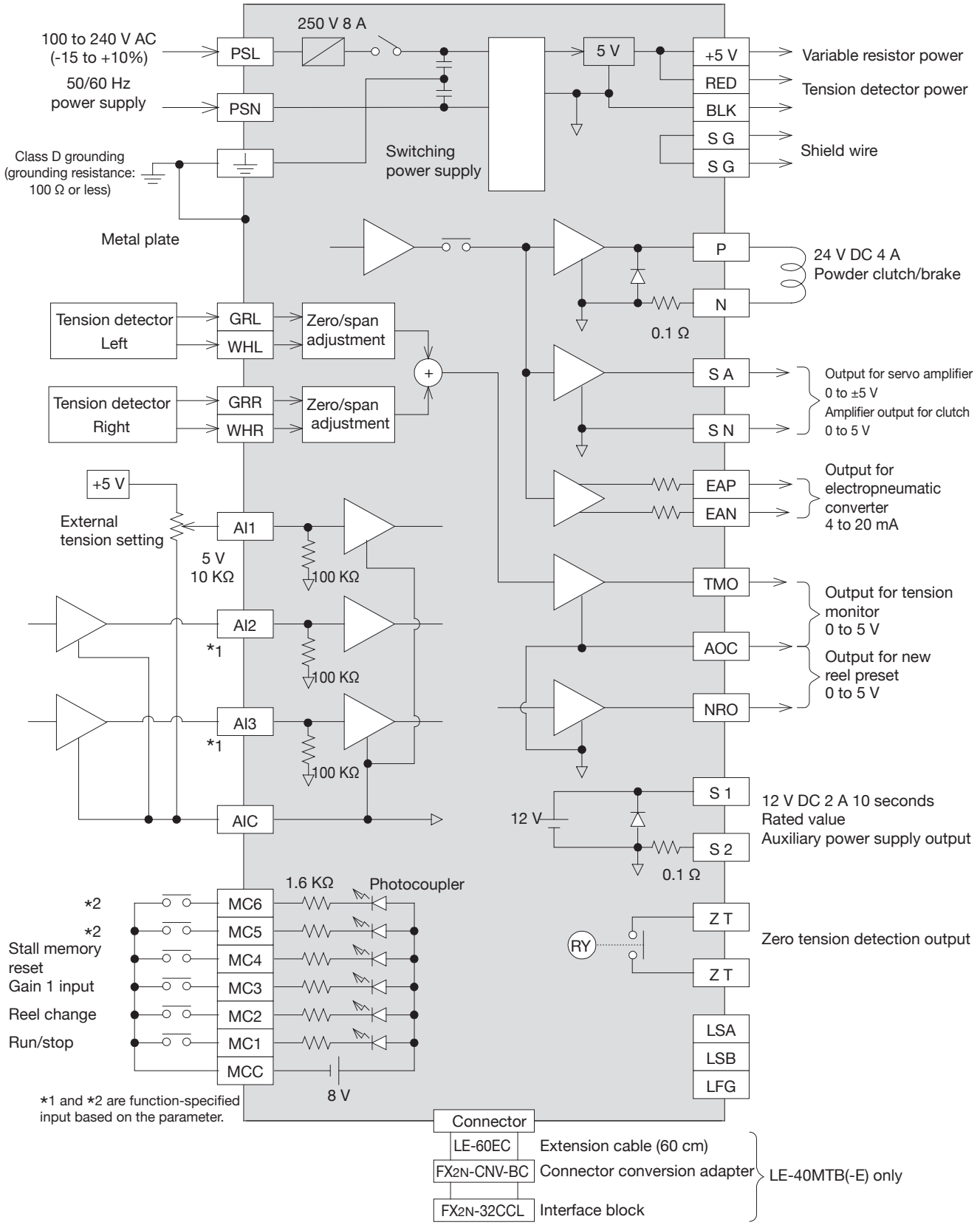

● Terminal layout

PSL	PSN	ZT	P	SI	MCC	MC2	MC4	MC6	+5V
⏚	·	ZT	N	S2	MC1	MC3	MC5	AIC	AI1

AI2	GRL	RED	BLK	GRR	SA	EAP	AOC	NRO	LSA
AI3	WHL	SG	SG	WHR	SN	EAN	TMO	LSB	LFG

Application example

● Combined use with an AC servo motor

By using the output signals [SA] and [SN] for control, these controllers can be used in combination with an AC servo motor that allows torque control.

- Wiring (Example)
  The following signals are input to the torque setting terminal and speed limit terminal of the servo amplifier.

	Torque setting terminal	Speed control terminal
During operation and normal stop	[SA] and [SN] signals from the tension controller	Variable resistor signal for upper limit speed setting
During emergency stop	Variable resistor signal for braking torque setting	0 V

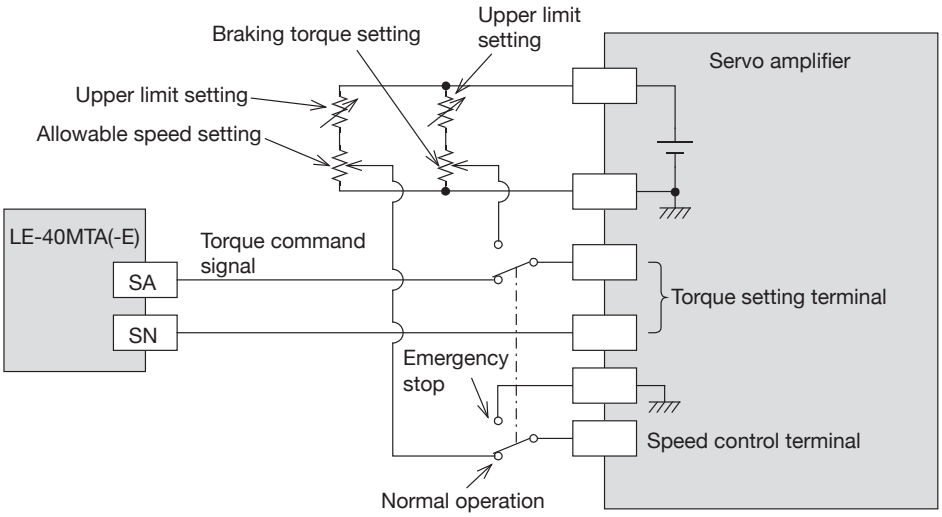

- Setting

  When using these controllers in combination with the servo motor, secure the following settings for the servo motor.

  (1) Control method setting..... Set the torque control method.

  (2) Output torque setting..... Make settings so that the output torque of the servo motor is the rated torque when the torque command signal is 5 V.

● 2-shaft switching with an AC servo motor

Servo motor torque is controlled by sending the control output from the SA terminal to the servo amplifier torque control input of either shaft A or B with the reel change switch.
To stop the original shaft, the speed control signal is brought down to zero and a separate torque limiting input is sent to the shaft.
The NRO output limits the torque during pre-drive operation and controls the servo motor speed input (VC) to keep the pre-drive rotation speed in proportion with the main shaft speed.

- Wiring (Example)

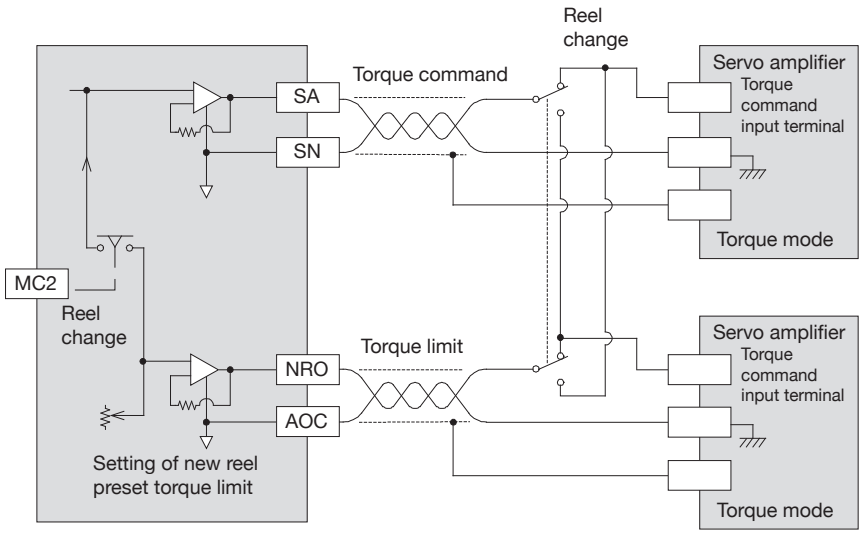

● 2-shaft switching with a powder clutch/brake

Connect the contact signal that was interlocked with the reel change during a 2-shaft operation to MC2. When this input signal changes from OFF to ON or ON to OFF, the control output is reset to the new reel preset value, and automatic control is performed after the preset timer is up. SW1, SW2, and SW3 are switched simultaneously by an interlocked operation with the cutter operation.
The auxiliary power supply (S1-S2 output) is a short-time rated output of 10 seconds.

• Wiring (Example)

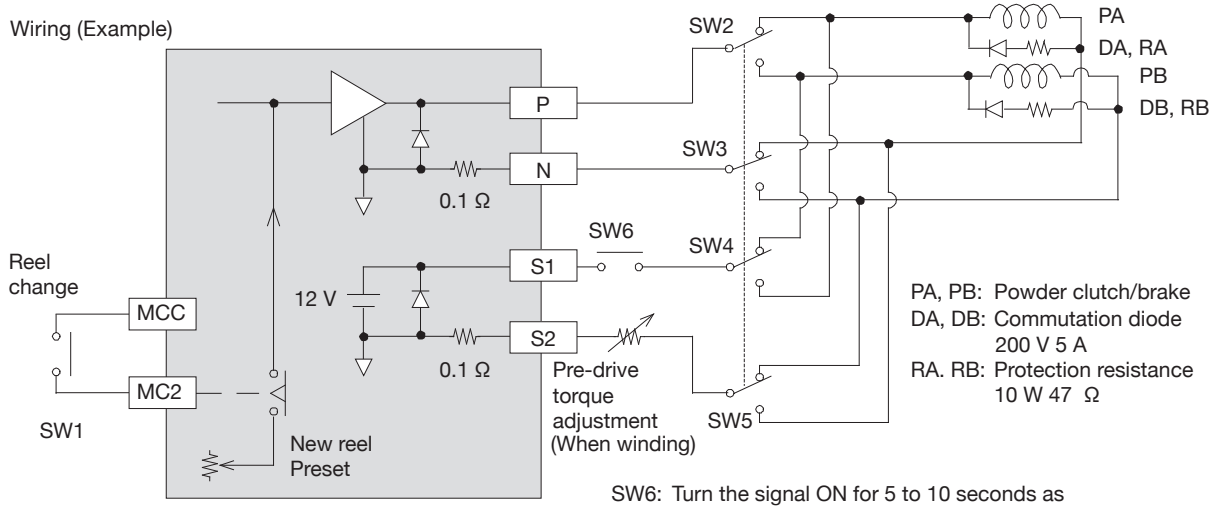

SW6: Turn the signal ON for 5 to 10 seconds as the output signal for pre-drive (in case of winding) prior to a reel change or old reel stop (in case of unwinding) after the reel change.

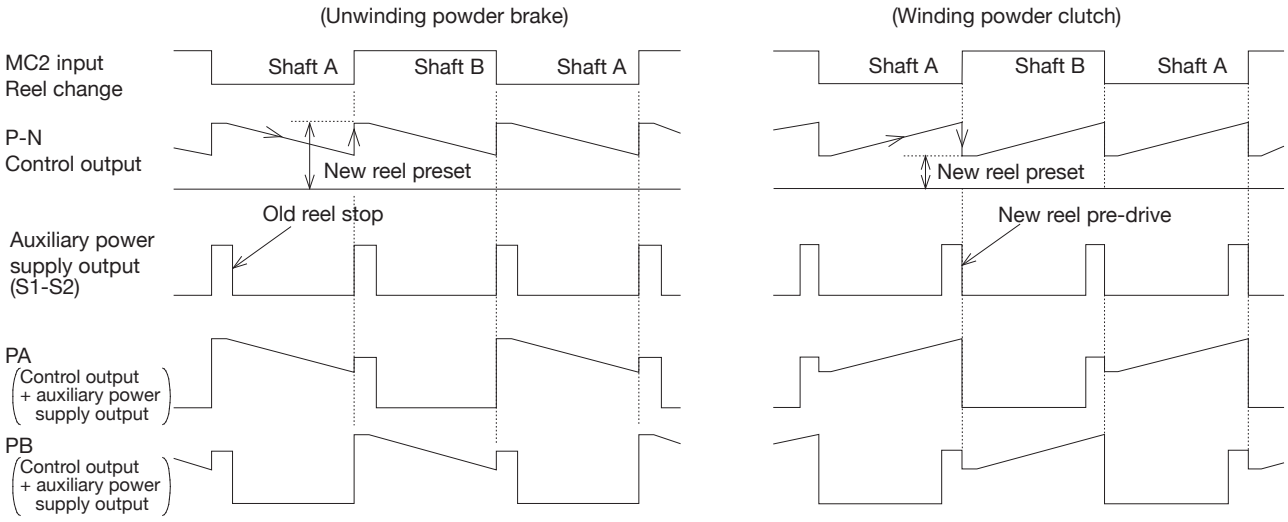

PA and PB indicate powder output of shaft A and B respectively.

● Intermediate control with a powder clutch/brake

- Wiring (Example)

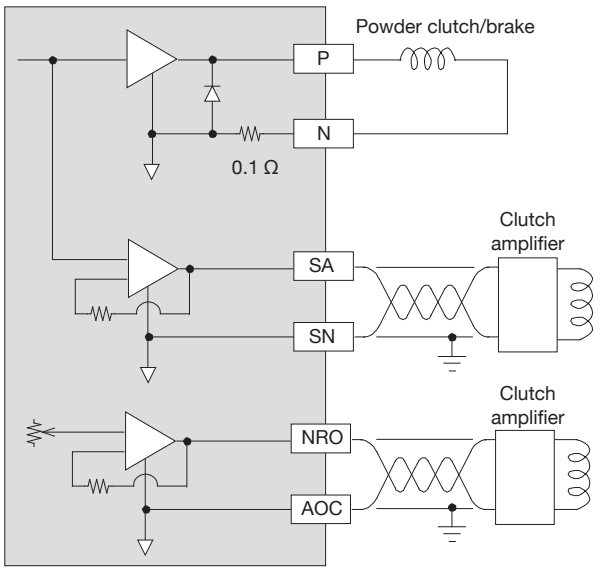

Connect a powder clutch (out-feed)/brake (in-feed) (24 V DC, 4 A or less).

Install externally an amplifier available for a 80 V DC clutch by using a control output (SA output) when a 80 V DC series power clutch/brake is used.

When an auxiliary brake (out-feed) or clutch (in-feed) for the countershaft is used, a manual control of the output can easily be performed by using the new reel preset output (NRO output).

● Intermediate control with an AC servo motor

- Wiring (Example)

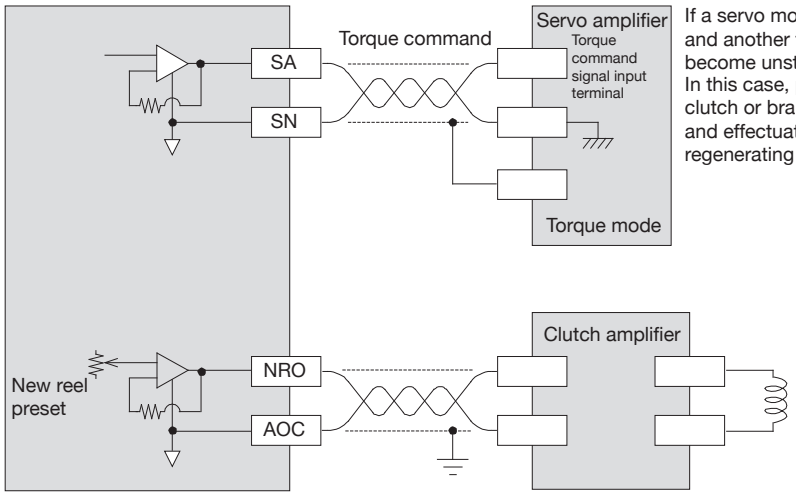

If a servo motor is used for regenerating and another for powering, control may become unstable near zero.
In this case, please install an auxiliary clutch or brake for the intermediate shaft and effectuate the control output to the regenerating side or powering side only.

LE-40MD reel diameter calculation unit

Using this unit in combination with the LE-40MTB or LE-40MTB-E tension controller enables more advanced tension control. (This product cannot be used alone.)

Features

● Precise tightening by high-precision taper control

Precise calculation of reel diameter based on pulse ratio calculation allows high-precision taper tension control such as stage taper control.

● Allows constant slip control of the powder clutch for winding.

When winding with an inverter and a powder clutch, performing constant slip control of the powder clutch using the reel shaft rotation speed signal greatly reduces heat dissipation. It has various advantages compared with using the powder clutch at a fixed input rotation speed.

- The selection of a powder clutch with a smaller rated torque may be possible.
- The life of the powder clutch may be significantly extended.

● Allows for easy 2-shaft control

By using the peripheral speed sync signal and reel rotation speed signal, it is easy to switch between pre-drive control and 2-shaft control.

● Timing detection of reel diameter and length measurement is possible.

3 contact points are provided for connection to various timing detectors.

Outline dimensions (mm)

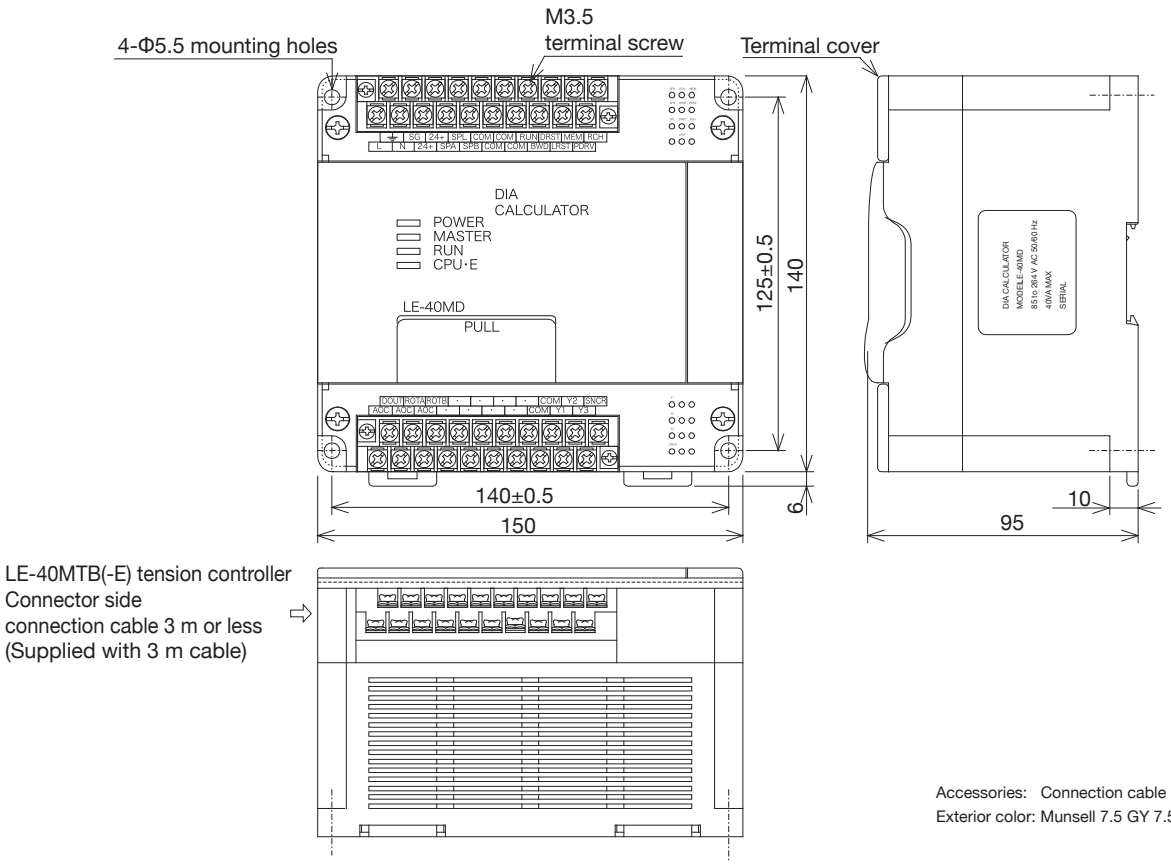

Accessories: Connection cable 1 (3 m)
Exterior color: Munsell 7.5 GY 7.5/1

Specifications

Item		Specifications	
Power supply	Input	100 to 240 V AC (-15 to +10%), 50/60 Hz, Power consumption: 40 VA, Power supply fuse: 250 V 3 A built-in	
	Output	Sensor power supply·····24 V DC, 150 mA or less	
Pulse signal	Input	Reel shaft pulse input·····Response frequency 500 Hz or less (for reel A, reel B) Measuring pulse input·····Response frequency 20 kHz or less	24 V DC, 7 mA/1 point Open collector type
Contact signal	Input	Run/stop·····ON: Run, OFF: Stop Forward/reverse·····ON: Reverse rotation, OFF: Forward rotation Reel diameter reset·····Approx. 0.5 second one-shot input Length measurement reset·····Approx. 0.5 second one-shot input Memory hold·····Reel diameter data held during ON (length measurement data is updated) Pre-drive·····Pre-drive rotation speed command output during ON Reel change·····OFF: Reel B, ON: Reel A	24 V DC, 7 mA/1 point Internal power feeding
	Output	Length measurement signal (3 points)·····ON at setting value or more Reel diameter signal (3 points)·····ON at setting value or more Peripheral speed synchronization signal·····ON when the pre-drive rotation speed command value is synchronized with the line speed equivalent value.	250 V AC, 0.5 A/1 point or 30 V DC, 0.5 A/1 point
Analog signal	Output	Reel diameter signal·····0 to 5 V DC, Load resistance: 1 kΩ or more Rotation speed signal·····0 to 10 V DC, Load resistance: 2 kΩ or more (for reel A, reel B)	
Weight		Approx. 1.2 kg	
Installation method		DIN rail, wall surface	
Setting range	Reel diameter	ϕ50 to 2000 mm	
	Length measurement	0 to 32,767 m	
	Target line velocity	5 to 1000 m/min	
	Material thickness	2 μm to 10 mm	
Major functions		Reel diameter calculation·····LE-40MTB(-E) tension controller taper control, reel diameter monitor, etc. Length measurement calculation·····Reel change timing detection, etc. Reel shaft rotation speed calculation·····Winding powder clutch slip rotation speed control, etc. Peripheral speed synchronization detection·····Reel change timing detection, etc.	
Environmental specifications	Operating ambient temperature	0 to 55°C	
	Operating ambient humidity	35 to 85% RH (no condensation)	
	Vibration resistance	10 to 55 Hz, 0.5 mm (up to 19.6 m/s^2), 4.9 m/s^2 when DIN rail is installed), 2 hours each in 3 axial directions	
	Impact resistance	98 m/s^2, 3 times each in 3 axial directions	
	Power noise withstand level	Noise voltage 1000 Vp-p, using a noise simulator with noise width of 1 μs and frequency of 30 to 100 Hz	
	Withstand voltage	1500 V AC for 1 minute (between all terminals together and the grounding terminal)	
	Insulation resistance	500 V DC, 5 MΩ or more when measured with insulation resistance tester	
	Grounding	Class D grounding, grounding resistance 100 Ω or less	
	Operating environment	Environment must be free of corrosive gases, flammable gases as well as conductive dust, and must have low levels of dust. Free from rain and water drops.	

External connection

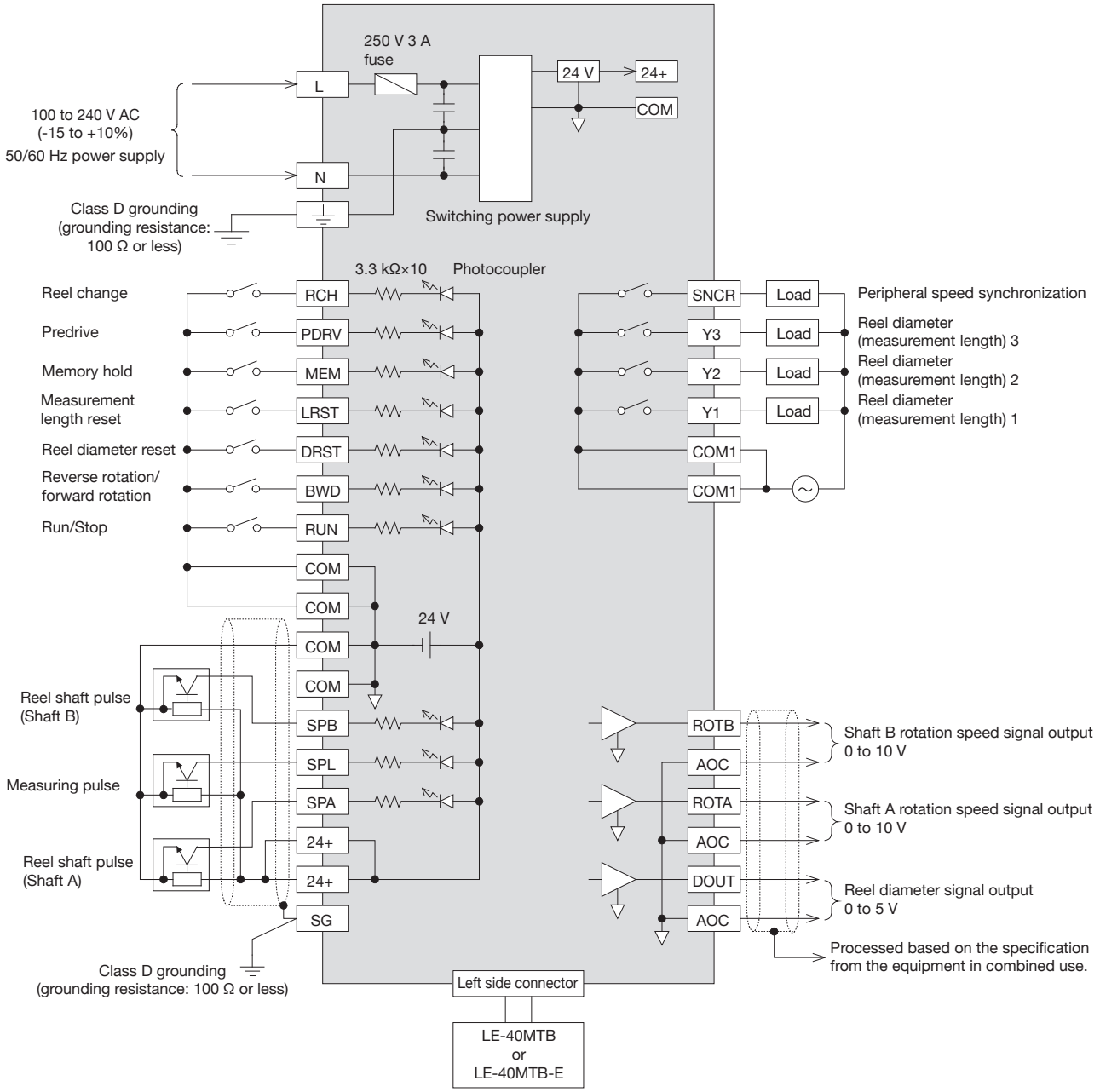

● Terminal layout

⏚	SG	24+	SPL	COM	COM	RUN	DRST	MEM	RCH
L	N	24+	SPA	SPB	COM	COM	BWD	LRST	PDRV

DOUT	ROTA	ROTB	·	·	·	·	COM1	Y2	SNCR
AOC	AOC	AOC	·	·	·	·	COM1	Y1	Y3

LD-30FTA tension controller

Open-loop control

The LD-30FTA tension controller is an open-loop controller that operates on an integrated thickness monitoring method. This method first sets the initial diameter and material thickness to the control device and calculates the current reel diameter by subtracting (when unwinding) the material thickness from or adds (when winding) to the initial diameter every rotation of the winding reel shaft.
(A proximity sensor for rotation detection is attached in advance to the winding reel shaft.)
The calculation result is used to generate a voltage output of 0 to 24 V to the powder clutch/brake as an actuator and to generate a command voltage of 0 to 5 V to the servo amplifier.

Features

- Easy control and adjustment of tension with simple operation
  - Automatic control is possible by setting only the tension, material thickness, and initial diameter.
  - Supports a wide range from 100 V to 240 V AC.
  - A wide range of material thickness and initial diameter can be set.
  - Backup power function that stores the current reel diameter even if the power is turned off.
  - Supports various types of actuators such as an AC servo.
- Advanced function mode for various applications
  - Winding taper control is also possible.
  - Inertia compensation function during acceleration/ deceleration.
  - Function for correction of torque nonlinearity of clutch/brake.
  - Mechanical loss correction function.
- Ease of use
  - Display of functions in Japanese/English and pictograms.
  - Numerical value setting by dial operation.
  - High-function/easy mode switching function with built-in DIP switch.
  - 8 types of setting value storage function by menu
    Up to 8 types of specific operation constants (such as material thickness, initial diameter, and taper ratio) can be stored.
  - Key locking key for prohibiting erroneous operation and display of invalid function.
- Ultrasonic sensor and touch lever input

  Installing an optional analog input board (LD-30FTA-1AD) enables input from an ultrasonic sensor and touch lever. This eliminates the need for setting the material thickness and initial diameter for each material.

Panel screen configuration

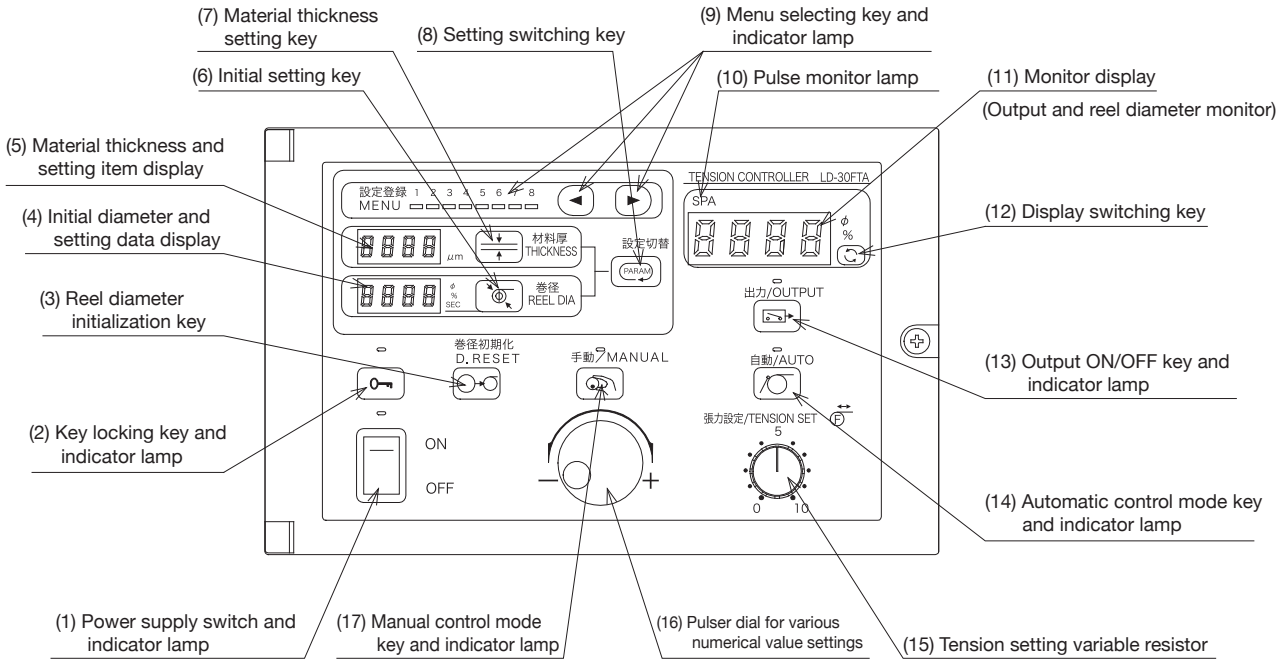

Outline dimensions (mm)

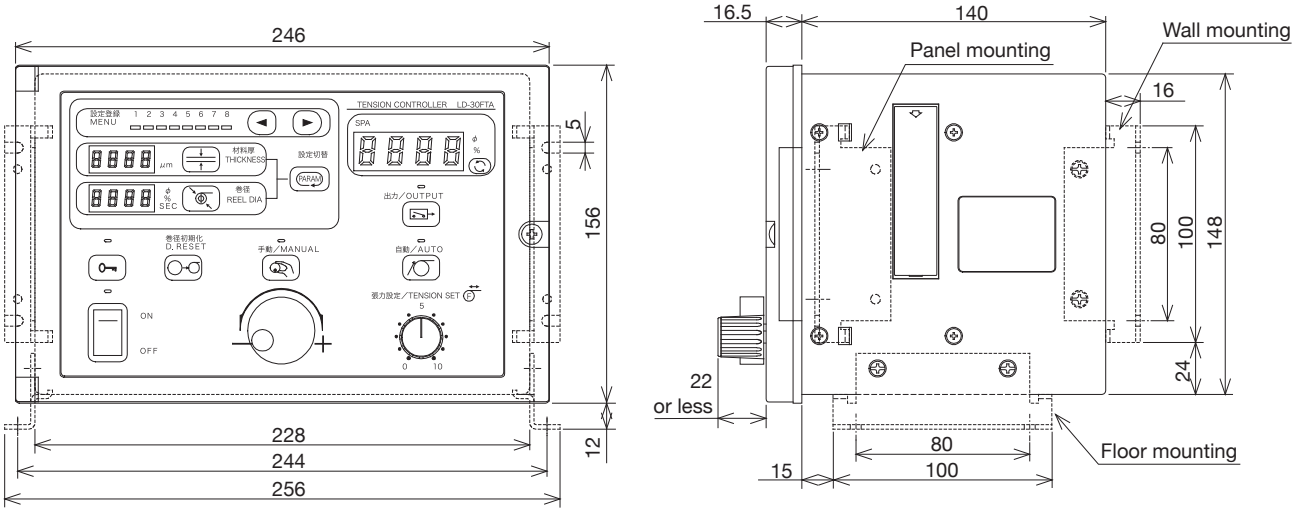

Accessories: Main unit mounting plate: 1 pair
Body/mounting foot fixing screws (M4 × 10): 4 pieces
Exterior color: Munsell 7.5 GY 7.5/1

Panel cut dimensions

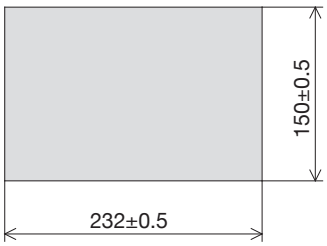

LD-30FTA-1AD option board (separately provided with a spacer)

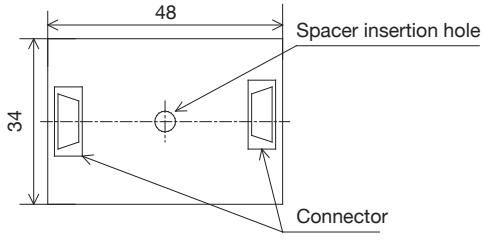

Specifications

Item		Specifications	
Power supply	Input	100 to 240 V AC (-15 to +10%), 50/60 Hz, Power consumption: 300 VA, Power supply fuse: 250 V 8 A built-in, Inrush current: 30 A 300 ms	
	Output	Sensor power supply····· 12 V DC, 100 mA or less	
Pulse signal	Input	Reel shaft pulse·····Open collector signal: 12 V DC, 7 mA, Response frequency: 300 Hz or less 1, 2, 4, or 8 pulses can be set per rotation of reel shaft.	
Contact signal	Input	Run/stop·····ON: Run, OFF: Stop Output remote·····ON: Output generation, OFF: Output stop Reel diameter reset·····Reset to initial diameter during ON. Acceleration gain·····Acceleration gain is valid during ON. Forward/reverse·····ON: Reverse rotation, OFF: Forward rotation Deceleration gain·····Deceleration gain is valid during ON.	12 V DC, 7 mA/1 point Internal power feeding
Analog signal	Input	External reel diameter input ·····0 to 10 V (when an LD-30FTA-1AD type option board is used) Ultrasonic sensor, touch lever potentiometer, etc.	
	Output	Clutch amplifier output·····24 V DC, 3 A or less Control signal output·····0 to 5 V DC, 5 mA or less, Load resistance: 1 kΩ or more	
Weight		Approx. 3.5 kg	
Installation method		Floor surface, wall surface, and panel mounting	
Environmental specifications	Operating ambient temperature	0 to 40°C	
	Operating ambient humidity	35 to 85% RH (no condensation)	
	Vibration resistance	10 to 55 Hz, 0.5 mm (up to 4.9 m/s^2), 2 hours each in 3 axial directions	
	Impact resistance	98 m/s^2 3 times each in 3 axial directions	
	Power noise withstand level	Noise voltage 1000 Vp-p, using a noise simulator with noise width of 1 μs and frequency of 30 to 100 Hz	
	Withstand voltage	1500 V AC for 1 minute (between all terminals together and the grounding terminal)	
	Insulation resistance	500 V DC, 5 MΩ or more when measured with insulation resistance tester	
	Grounding	Class D grounding, grounding resistance 100 Ω or less	
	Operating environment	Environment must be free of corrosive gases, flammable gases as well as conductive dust, and must have low levels of dust. Free from rain and water drops.	
Major functions		Reel diameter detection ···Integrated thickness calculation method, external analog signal (ultrasonic sensor, etc.) Tension control·····Constant tension control, taper control (straight line) Control function·····Stop timer, stop gain, stop bias, acceleration/deceleration gain, mechanical loss correction, weak excitation function torque Nonlinear correction·····Polygonal line approximation corrections in 5 steps. Setting by correction number input for each clutch/brake.	

Parameter list

Setting item	Setting item		Initial value	Unit	Function mode
	Minimum	Maximum			
Tension setting	0	100	-	%	Easy/high-function
Material thickness setting	1/0.1	9,999/999.9	50	μm	Easy/high-function
Initial diameter setting	1	2000	500	mm	Easy/high-function
Taper setting	0	100	100	%	High-function
Stop timer setting	0.0	100.0	0.0	sec	High-function
Stop gain setting	5	400	100	%	High-function
Stop bias setting	0	50	0	%	High-function
Deceleration gain setting	5	400	100	%	High-function
Acceleration gain setting	5	400	100	%	High-function
Mechanical loss setting	0	50	0	%	High-function
Weak excitation setting	0	50	0	%	High-function
Setting the number of reel shaft pulses	1, 2, 4, 8		1	-	High-function
Nonlinear correction setting	0	200	0	-	High-function
Minimum diameter setting	1	Maximum diameter setting value	100	mm	Easy/high-function
Maximum diameter setting	Minimum diameter setting value	2000	500	mm	Easy/high-function

External connection

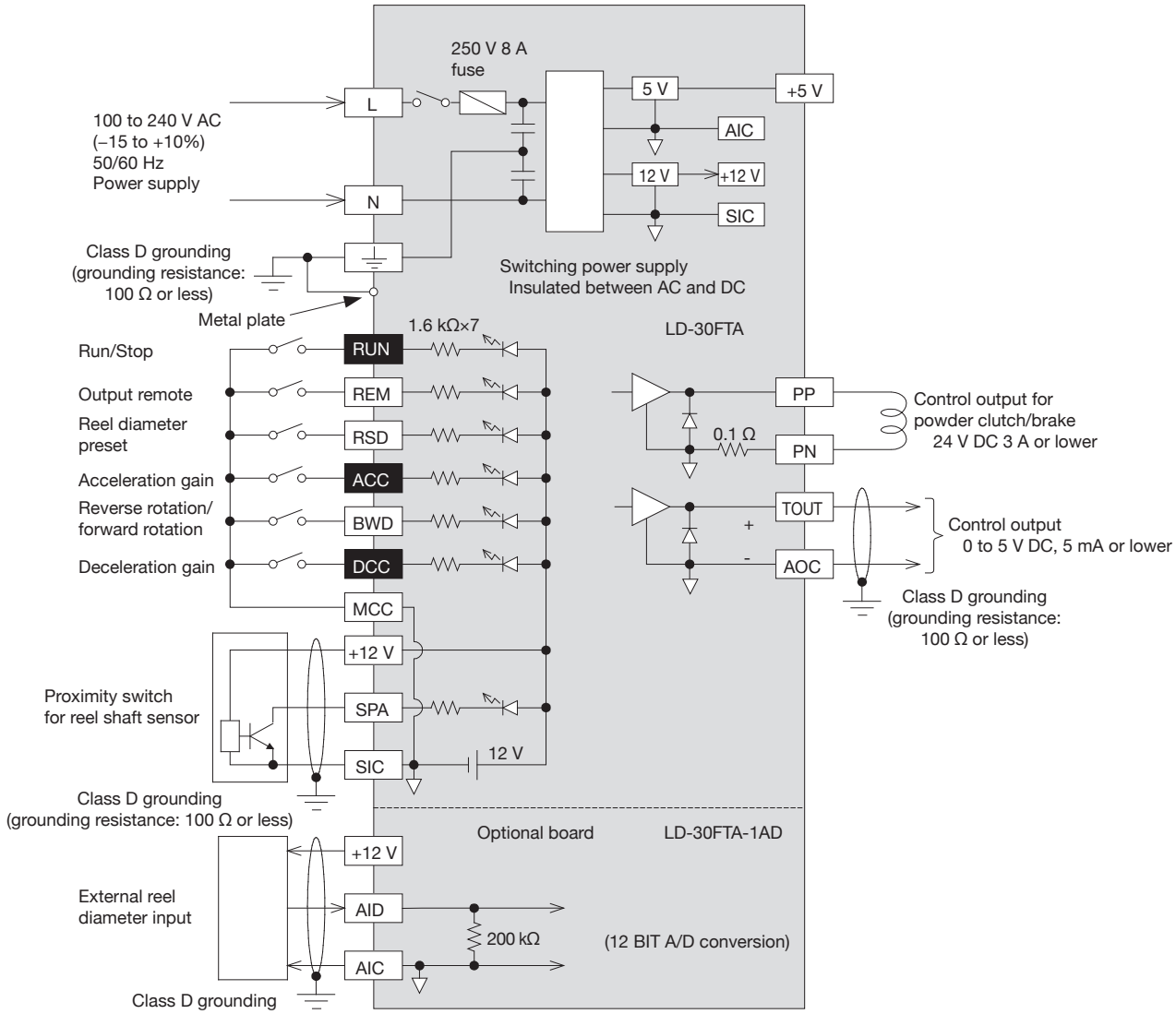

The input terminals indicated with white/black-reversed characters are effective only in the high-performance mode.

● Terminal layout

L	·	N	·	·	·	PP	RUN	RSD	BWD
⏚	·	·	·	·	PN	MCC	REM	ACC	DCC

·	+12V	SPA	+5V	·	·	TOUT	·	LSA	LSB
·	SIC	·	AIC	AID	·	AOC	·	LSG	·

LSA, LSB, and LSG are not used.

Application examples

● Using a proximity switch

This is a control example of the winding part for intermittent feed to enable punching with the material feed stopped.
In spite of intermittent feed, the take-up motor is continuously rotating and the clutch continues to apply tension while slipping.

Reel diameter D = ϕ92 → ϕ500 mm
Material Paper (thickness 200 μm)

Other possible uses
- ●Hot stamping
- ●Screen-printing

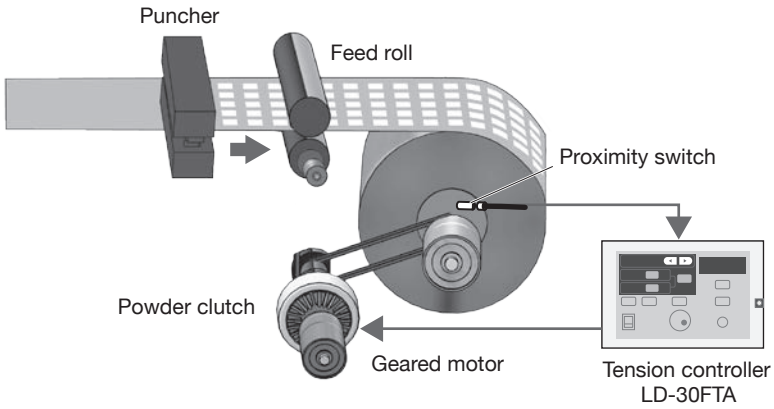

1. DIP switch setting (required only at initial setting; not required during normal operation)

	1	2	3	4	5	6	7	8
ON	Unwinding	×1	Disabled	Disabled		Normal	Easy	Run
DIP switch	Control reel	Thickness unit	Reel diameter input	Output remote	(Unavailable)	Memory initialization	Function mode	Operation mode
OFF	Wind	×0.1	Enabled	Enabled		Initial-ization	High-func-tion	Adjust-ment

(Initial setting status)

	1	2	3	4	5	6	7	8
ON	Unwinding	×1	Disabled	Disabled		Normal	Easy	Run
DIP switch	Control reel	Thickness unit	Reel diameter input	Output remote	(Unavailable)	Memory initialization	Function mode	Operation mode
OFF	Wind	×0.1	Enabled	Enabled		Initial-ization	High-func-tion	Adjust-ment

* For normal operation, set the DIP switch for the operation mode to [Run].

2. Maximum diameter setting

(Required only at initial setting; not required during normal operation)

(1) Select the maximum diameter with the setting switching key (8) and enter “ϕ500” with the pulser.

(2) Set the operation mode of the DIP switch to “RUN,” and turn the power off and turn it on again.

3. Setting procedure

(Setting is required only when the material is changed.)

(1) Press the “Material thickness Setting” key (7), and enter the material thickness “200 μm” with the pulser.

(2) Press the “Initial setting” key (6), and enter the reel diameter “ϕ92” with the pulser.

(3) Press the “Reel diameter initialization” key (3).

4. Test run procedures

(Required only at initial setting; not required during normal operation)

(1) Press the “Manual Mode Selection” key, and turn on the output ON/OFF switch.

(2) Check the functions of the connected devices such as the motor and PLC.

5. Automatic operation procedure

(1) Press the “Automatic Control Mode Selection”key.

(2) Adjust the tension with the tension-setting variable resistor.

• Maximum reel diameter display

μm

• Reel diameter display

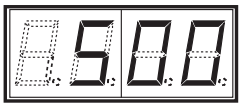

ϕ

• Material thickness display

μm

• Reel diameter display

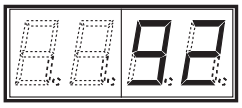

ϕ

● Using an ultrasonic sensor

Winding laminating film for the upper and lower sides of the base material. Tension is kept constant at the laminating area to prevent warps and wrinkles, and to improve bonding during lamination. An open-loop type tension controller is used because there is no space for a tension detector. The reel diameter is detected by the ultrasonic sensor, so the initial diameter and wire diameter do not need to be set.

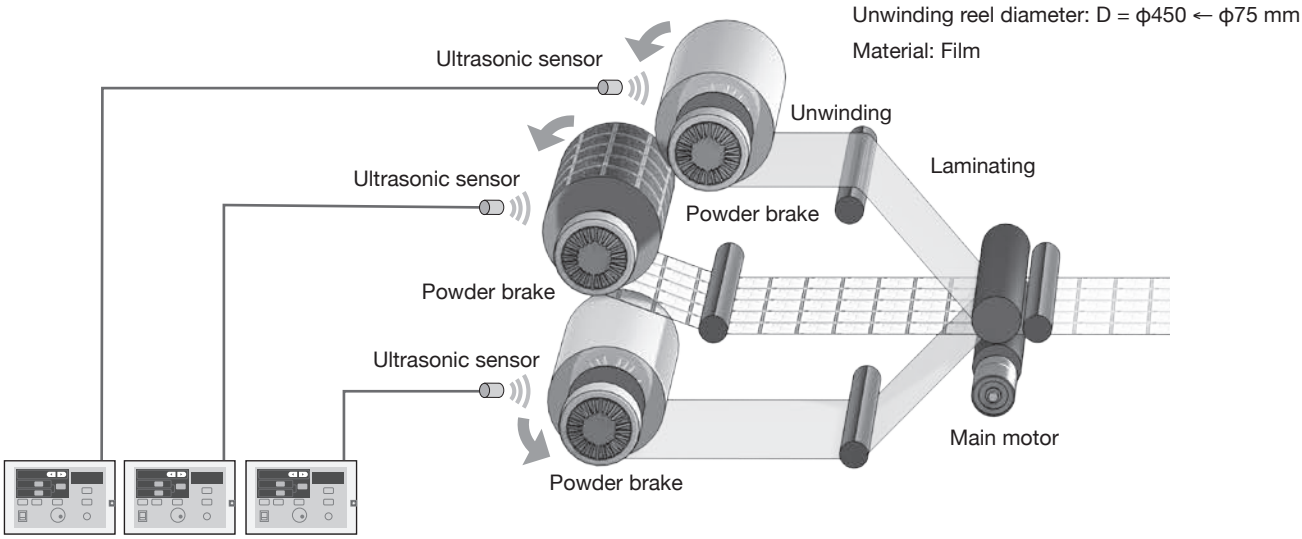

LD-30FTA + LD-30FTA-1AD

1. DIP switch setting (required only at initial setting; not required during normal operation)

	1	2	3	4	5	6	7	8
ON	Unwinding	×1	Disabled	Disabled		Normal	Easy	Run
DIP switch	Control reel	Thickness unit	Reel diameter input	Output remote	(Unavailable)	Memory initialization	Function mode	Operation mode
OFF	Wind	×0.1	Enabled	Enabled		Initial-ization	High-func-tion	Adjust-ment

(Initial setting status)

	1	2	3	4	5	6	7	8
ON	Unwinding	×1	Disabled	Disabled		Normal	Easy	Run
DIP switch	Control reel	Thickness unit	Reel diameter input	Output remote	(Unavailable)	Memory initialization	Function mode	Operation mode
OFF	Wind	×0.1	Enabled	Enabled		Initial-ization	High-func-tion	Adjust-ment

∗ For normal operation, set the DIP switch for the operation mode to [Run].

2. Teaching operation

(Required only at initial setting; not required during normal operation)

(1) Select the minimum diameter with the setting switch key, set the minimum diameter "ϕ75" with the pulser, install the smallest diameter winding reel (ϕ75), and press the reel diameter initialization key.

(2) Select the maximum diameter with the setting switch key, set the maximum diameter "ϕ450" with the pulser, install the maximum diameter winding reel, and press the reel diameter initialization key.

(3) Set the operation mode of the DIP switch to "RUN," and turn the power off and turn it on again.

• Minimum diameter display

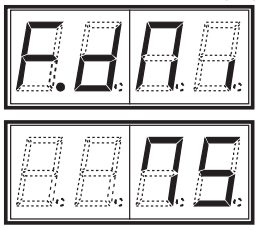

• Maximum diameter display

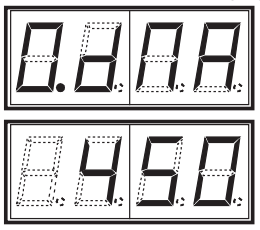

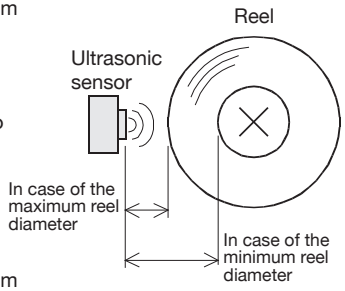

3. Manual operation procedures

(Required only at initial setting; not required during normal operation)

(1) Press the "Manual Mode Selection" key, and turn on the output ON/OFF switch.

(2) Check the functions of the connected devices such as the motor and PLC.

4. Automatic operation procedure

(1) Press the "Automatic Control Mode Selection" key.

(2) Adjust the tension with the tension-setting variable resistor.

LD-05TL tension controller

Open-loop control

The LD-05TL tension controller receives power from the 24 V DC general-purpose stabilized power supply and controls unwinding/winding tension by inputting an analog system reel diameter signal such as a potentiometer linked with the touch lever. Since the reel diameter signal processing block and the constant current (constant voltage) amplifier block are separated, it can be used only as an amplifier. This controller is used in combination with a powder clutch/brake of 24 V DC, 0.5 A or less.

Features

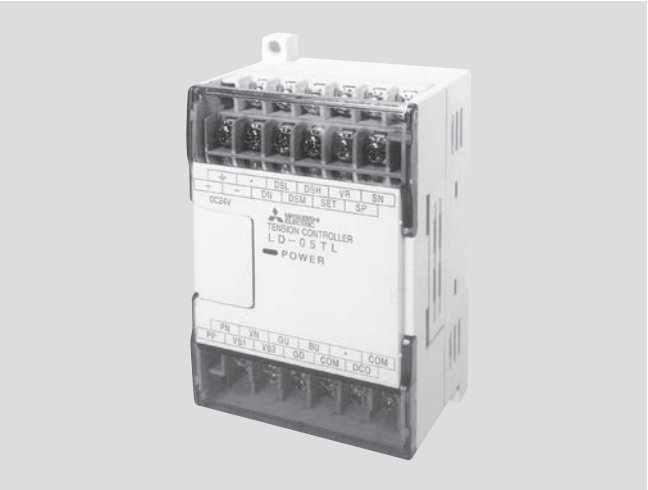

● Tension control using the touch lever

Tension control is enabled with the touch lever using the potentiometer. Automatic operation is enabled by only tension setting with the external variable resistor.

● Usable as a clutch amplifier such as for powder clutch/brake

This controller can be used as a clutch amplifier such as for powder clutch/brake by using a PLC or other kind of controller.

● Stable output characteristics against temperature fluctuation

Stable torque can be obtained by constant current control.
(Constant voltage control is also usable.)

● Not loose when stopped

The external contact signal enables inertia compensation such as powering up, powering down, and powering addition.

Outline dimensions (mm)

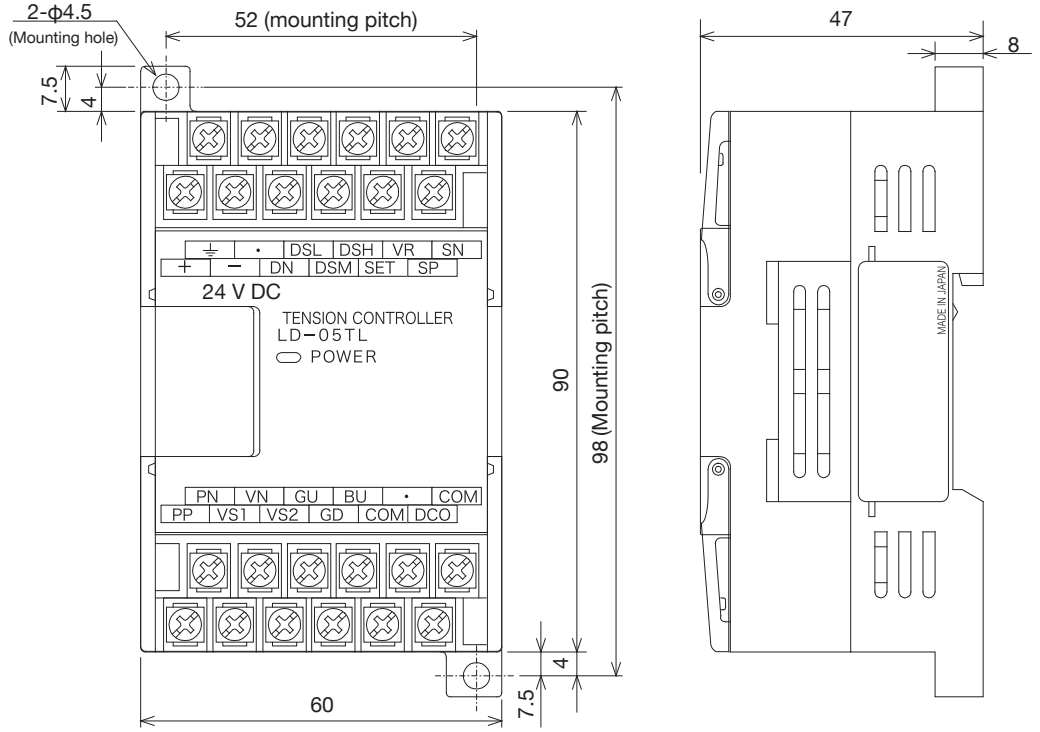

Exterior color: Munsell 0.08GY 7.64/0.81

Specifications

Item		Specifications	
Power supply		24 V DC ±15%	
Analog signal	Input	Reel diameter signal ····· Input one of the following voltage signals between the minimum diameter and maximum diameter. 0 to 5 V Internal resistance: 50 kΩ 0 to 8 V Internal resistance: 80 kΩ 0 to 10 V Internal resistance: 100 kΩ Tension setting signal ····· 0 to 5 V Internal resistance: 190 kΩ	
	Output	Control output ····· For the tension setting signal 0 to 5 V Current output ····· 0 to 0.5 A DC (in constant current control mode) Voltage output ····· 0 to 22 V DC (in constant voltage control mode)	
Contact signal	Input	Output correction signal • For powering up ····· Output multiplication of Approx. 100% to 500% • For powering down ····· Output multiplication of Approx. 0% to 100% • For powering addition ····· Approx. 0 to 0.1 A (in constant current control mode) Output addition of Approx. 0 to 4.4 V (in constant current control mode) Constant voltage/constant current switching signal	24 V DC, 7 mA
	Output	Reel diameter detection output • ON when reel diameter equals or underruns the set value. Open collector output: 30 V DC, 0.2 A or less	
Weight		Approx. 220 g	
Installation method		2 M4 screws, or 35 mm wide DIN rail mounting	
Environmental specifications	Operating ambient temperature	0 to 55°C	
	Operating ambient humidity	35 to 85% RH or less (no condensation)	
	Vibration resistance	10 to 55 Hz, 0.5 mm (up to 19.6 m/s^2), 2 hours each in 3 axial directions	
	Operating environment	Free from corrosive and flammable gases as well as dust. Free from rain and water drops.	

Note: Since the maximum output voltage of this product is approx. 20.5 V (85% of the rated voltage) or more when the power supply voltage is 24 V, and approx. 17.5 V (72% of rated voltage) or more when the power supply voltage is 20.4 V (24 V - 15%), select a clutch or brake with a sufficient torque margin.

External connection

● For control with a potentiometer attached to the touch lever

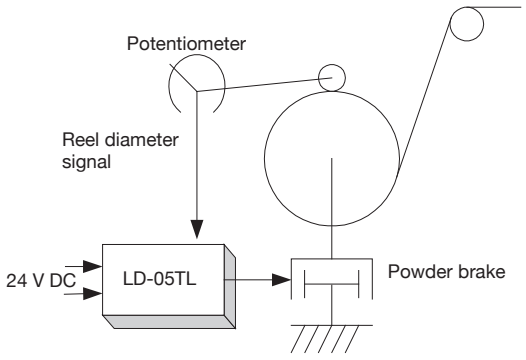

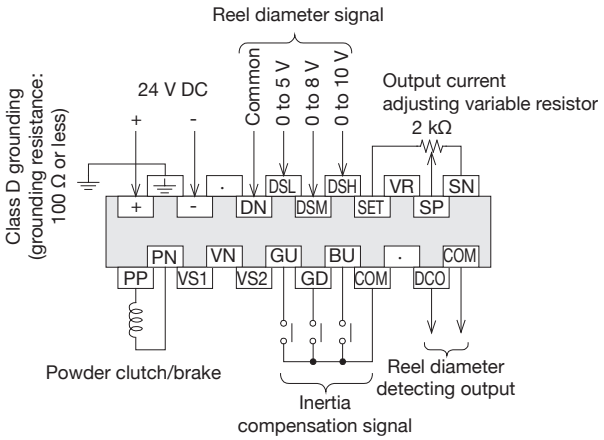

● For control with an external analog voltage signal as a clutch amplifier

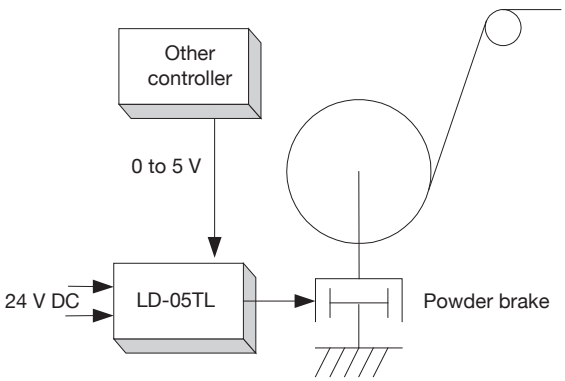

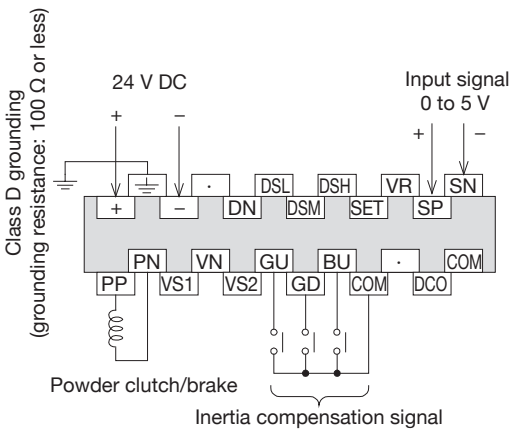

LE-50PAU power amplifier

The LE-50PAU power amplifier is used for controlling exciting current such as for a powder clutch/brake. It is thus used as a clutch amplifier for a tension controller not incorporating a clutch amplifier or for controlling with the constant current control method.

Features

● Constant current/constant voltage control method

Both constant-current and constant-voltage control are supported (setting is switched with the built-in DIP switch). Constant-current control can eliminate the effects of torque fluctuations that are caused by a rise in powder clutch/brake coil temperature and enable more stable tension control.
In a system with multiple powder clutches/brakes that are connected in parallel in which the current is distributed by a variable resistor, constant-voltage control allows easier adjustment than constant-current control.

● Nonlinear correction function of torque characteristics

The powder clutch/brake's non-linear transmission torque to exciting current characteristic is compensated in five stages. Fluctuation of tension caused by the change in reel diameter can be minimized.

● Variable input signal level setting

The input signal voltage level can be set to 0 to 5 V, 0 to 8 V, or 0 to Vmax (Vmax can be set to a level between 0.5 and 8 V).

● Built-in setting display function

4-digit LED display, 4 push buttons, and 10-position dipswitches allow for easy setting of input signal level, output full-scale value, and nonlinearity compensation data.
Inertia compensation or output can also be displayed during control.

Outline dimensions (mm)

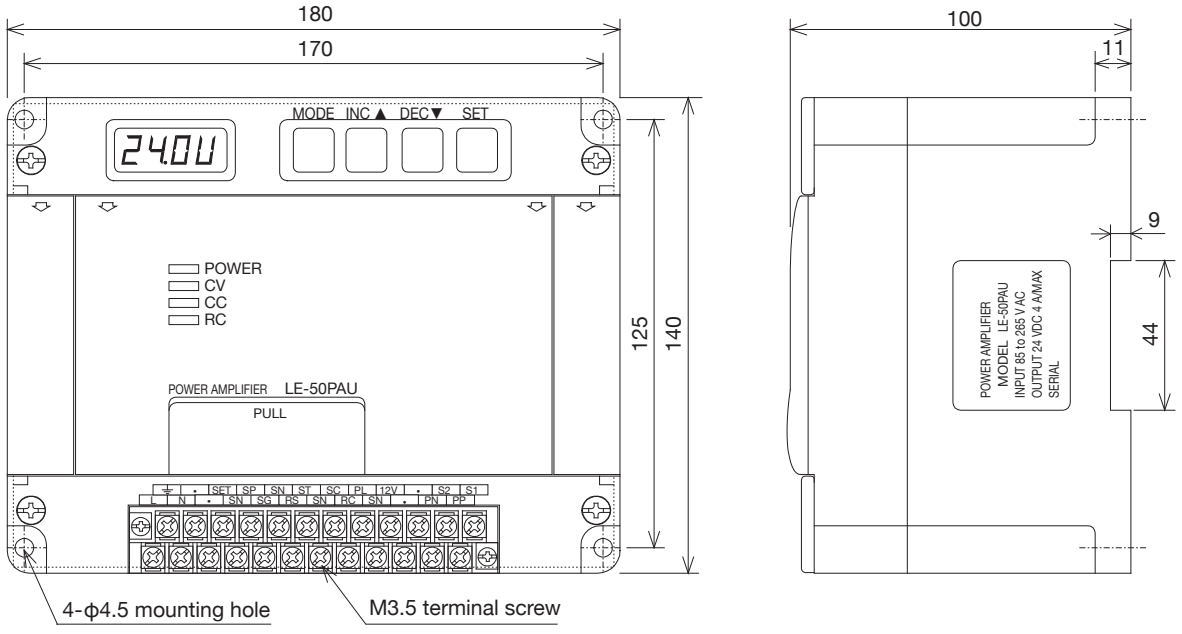

Exterior color: Munsell 7.5 GY 7.5/1

Specifications

Item		Specifications	
Power supply	Input	100 to 240 V AC (-15 to +10%), 50/60 Hz, Power consumption: 400 VA, Power supply fuse: 250 V 8 A built-in, Inrush current: 50 A 300 ms	
	Output	Power for variable resistor ····· 8 V DC Variable resistor resistance: 0.5 to 2 kΩ or more Reel shaft sensor power supply ···· 12 V DC, 15 mA or less	
Contact signal	Input	Start ····· When turned off, the stop timer activates to perform inertia compensation operation. Output remote ····· ON: Output generation, OFF: Output stop Auxiliary output ON/OFF ····· ON: Auxiliary output occurrence	12 V DC 5 mA/1 point Internal power feeding
Analog Signal	Input	Control signal ····· 0 to 8 V, Internal resistance: 22 kΩ	
	Output	Power amplifier output ····· 24 V DC, 4 A or less Auxiliary output ····· 10 V DC, 2 A or less , within 30 seconds, Load resistance: 6 Ω or more/75°C	
Weight		Approx. 2.5 kg	
Installation method		Wall-mounted	
Environmental specifications	Operating ambient temperature	0 to 55°C	
	Operating ambient humidity	35 to 85% RH (no condensation)	
	Vibration resistance	10 to 55 Hz, 0.5 mm (up to 19.6 m/s^2), 2 hours each in 3 axial directions	
	Impact resistance	98 m/s^2 3 times each in 3 axial directions	
	Power noise withstand level	Noise voltage 1000 Vp-p, using a noise simulator with noise width of 1 μs and frequency of 30 to 100 Hz	
	Withstand voltage	1500 V AC for 1 minute	between all terminals together and the case
	Insulation resistance	500 V DC, 5 MΩ or more when measured with insulation resistance tester	
	Grounding	Class D grounding, grounding resistance 100 Ω or less	
	Operating environment	Environment must be free of corrosive gases, flammable gases as well as conductive dust, and must have low levels of dust. Free from rain and water drops.	

External connection

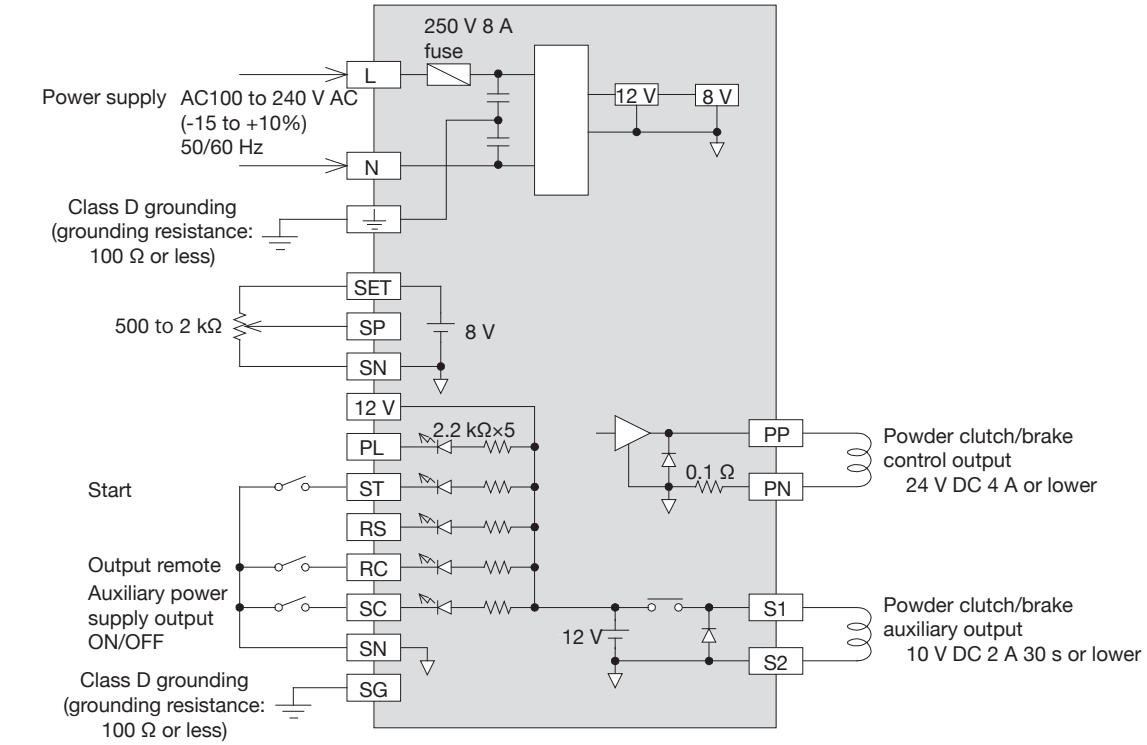

● Terminal layout

⏚	·	SET	SP	SN	ST	SC	PL	12 V	·	S2	S1
L	N	·	SN	SG	RS	SN	RC	SN	·	PN	PP

LD-40PSU power supply unit

The LD-40PSU power supply unit is a constant voltage control type clutch amplifier for a powder clutch/brake that varies the voltage based on the variable resistor on the panel surface, signal voltage from the outside, external variable resistor, etc.

Features

● External control signal (remote ON/OFF)

With an external signal of 0 to 5 V, output voltage can be controlled remotely in the range of 0 to 24 V.

● Output ON/OFF function

Output can be turned on or off with the buttons on the panel or by using the external remote contact signal (RC signal).

● Inertia compensation function

In the manual tension control mode, stop timer operation and inertia compensated output in response to the RC signal are possible.

● Load short-circuit protection/warning

The short-circuit protection circuit is triggered by a load short-circuiting. The LED on the panel turns on when the circuit is triggered.

● 2-level output setting

This device can be set to supply 2 different levels of output voltage: one with and the other without RC input.
The one without the RC input can be set to provide weak excitation, etc.

Outline dimensions (mm)

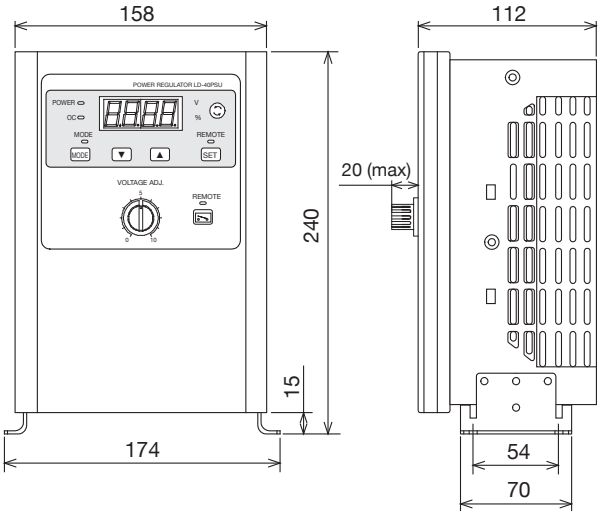

Mounting screw hole dimensions for floor mounting

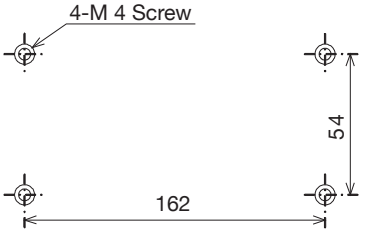

Panel cut dimension for panel mounting

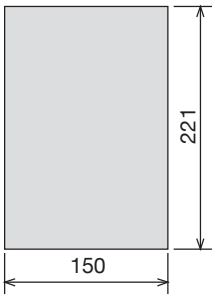

Accessory: A pair of mounting plates
4 screws (M4 × 10)
Exterior color: Munsell 7.5 GY 7.5/1 equivalent

Specifications

Item		Terminal name	Specifications
Power supply		L/N	100 to 240 V AC (+10%, -15%), 50/60 Hz Power consumption: 200 VA (at 24 V DC, 3.8 A)
Output	Clutch amplifier output	PP/PN	24 V DC 3.8 A
	Power for variable resistor	+5 V/SN	5 V DC, 10 mA or less, External variable resistor: 0.5 to 2 kΩ
Input	Analog signal	SP/SN	Control input signal: 0 to 5 V DC
	Contact signal	RC/SN	Remote output ON/OFF, 12 V DC/mA internal power feeding
Weight		Approx. 3 kg	
Environmental specifications	Ambient temperature	-5 to +55°C	
	Ambient humidity	35 to 85% RH (no condensation)	
	Vibration resistance	10 to 55 Hz, 0.5 mm (up to 4.9 m/s^2), 2 hours each in 3 axial directions	
	Impact resistance	98 m/s^2 3 times each in 3 axial directions	
	Power noise withstand level	Noise voltage 1000 Vp-p, using a noise simulator with noise width of 1 μs and frequency of 30 to 100 Hz	
	Withstand voltage	1500 V AC for 1 minute Measure between all terminals together (excluding grounding terminal) and the ground terminal, and between all terminals together (excluding grounding terminal) and the mounting bracket.	
	Insulation resistance	5 MΩ or more when measured with 500 V DC insulation resistance tester (between all terminals together and the grounding terminal)	
	Grounding	Class D grounding (100 Ω or less, common grounding with strong power field not possible)	
	Operating environment	Environment must be free of corrosive or flammable gases as well as conductive dust, and must have low levels of dust.	

External connection

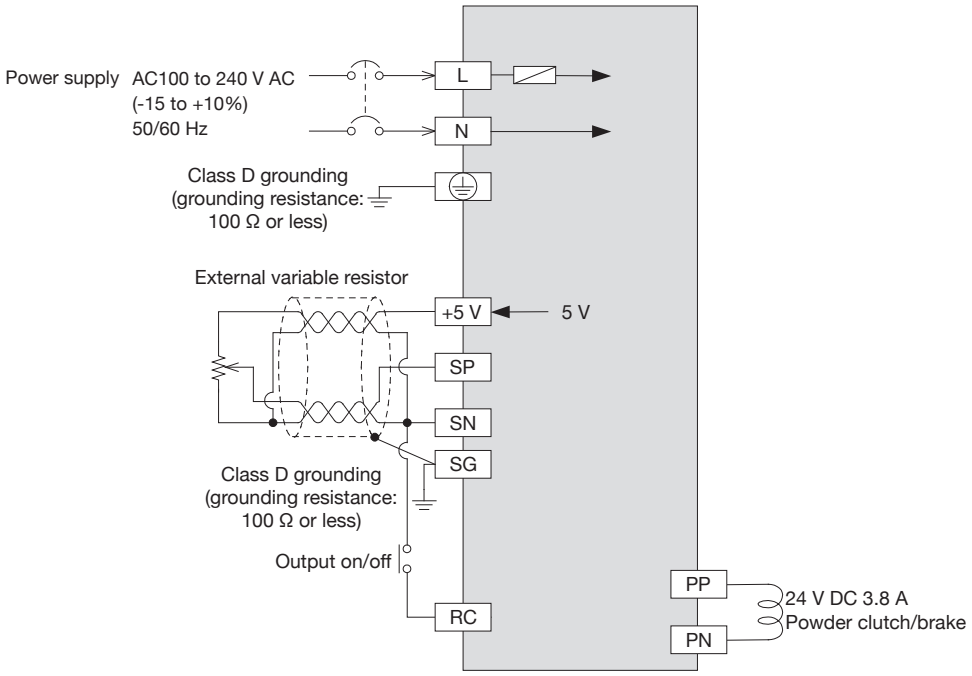

● Terminal layout

L	•	N	•	⏚	SG	RC	SN	SP	+5V	PN	PP

LD-10PAU power amplifier

The LD-10PAU-☐ power amplifier is used for a dedicated clutch for controlling the exciting current of 24 V DC of small powder clutches/brakes, which are used in devices that perform tension control such as wire, paper, or film manufacturing machines.
The constant-current control method achieves constant output current and constant generated torque even if the coil resistance changes due to fluctuations in the clutch/brake temperature to realize stable control with high precision.

Features

● Equipped with functions required in simultaneous multi-shaft control.

Small clutches/brakes are used not only for low tension single shaft control, but also for multiple-shaft simultaneous control using multiple units on one machine. This power amplifier compensates for the mechanical friction of each shaft and the difference in clutch/brake characteristics, which are problems caused in such control, and achieves stable control.
Space-saving installation by left/right close attachment to the DIN rails.

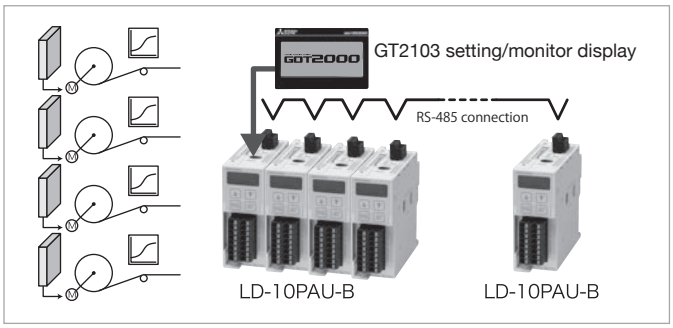

● 16 types of output torque command and inertia compensation gain can be registered and switched

Sixteen types of output torque command value and inertia compensation gain value can be stored in the internal memory. Registration memory can be externally switched from the external digital binary ON/OFF signal, the FX PLC (only LD-10PAU-B compatible) connected to RS-485, or the display (GT2103).

● Allows selection of the output current command to suit the purpose of use.

(1) Analog input (0 to 5 V, 0 to 10 V)
(2) Digital binary ON/OFF signal input (8 bits + Strobe)
(3) Key input from the surface → Internal memory (16 types can be set)
(4) Input from the graphic operation terminal → Internal memory (16 types can be set)
(5) Input from the PLC (through RS-485 communication) → Internal memory (16 types can be set, supported only in the LD-10PAU-B)

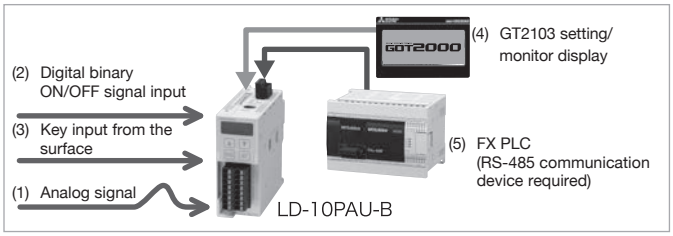

● Incorporates a correction function for the nonlinear torque characteristics of clutches and brakes.

A nonlinear correction function corresponding to the current-torque characteristics of Mitsubishi Electric clutches and brakes is built in. The rated current and nonlinear correction initial value can be set simply by setting the model number of the clutch/brake to be connected.

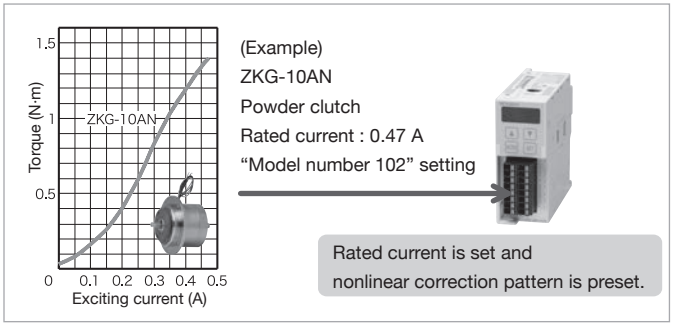

● Mitsubishi Electric display available for setting/ monitoring

Mitsubishi Electric monitor display (GT 2103) can be connected.
(Connection cable: GT10-C☐☐☐R4-8P☐
For the sample screen data for the GOT, consult your local Mitsubishi Electric representative.
In addition, the screen creation software (GT Designer2 or GT Designer3) can be used to customize the screen and create an original-design screen.

● Can change absence/presence of the output cushion operation using the external contact input

The output current can be cushioned and turned on and off as a countermeasure against residual torque ripple in hysteresis clutches and brakes.

● Equipped with open-loop control mode using analog reel diameter signal

Open-loop control is available using the analog reel diameter signal by selecting the tension controller mode.
The tension can be controlled using the reel diameter signal sent from the potentiometer or ultrasonic sensor attached to the touch lever.

● The system including clutches and brakes can be totally controlled when a PLC is connected

The LD-10PAU-B incorporating RS-485 communication can give output commands to the clutch amplifier and monitor the status when the FX series PLC (with N:N network function) is connected. This function makes it easy to control the clutch/brake including overall control of the device and to perform program development in multiple-shaft simultaneous control.

● Easy setup of multiple clutch amplifiers using the memory cassette

Various settings can be copied and read when the optional memory cassette is attached. Various settings can be automatically backed up at the time of startup when the memory cassette is attached.

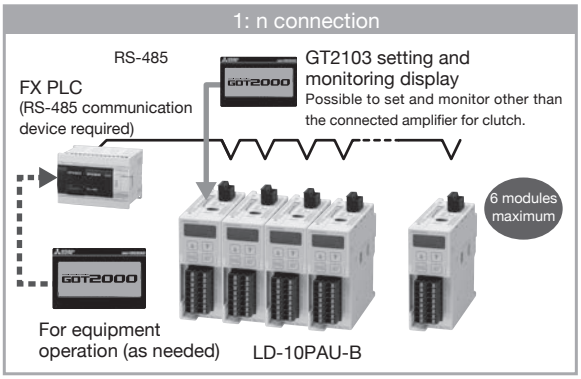

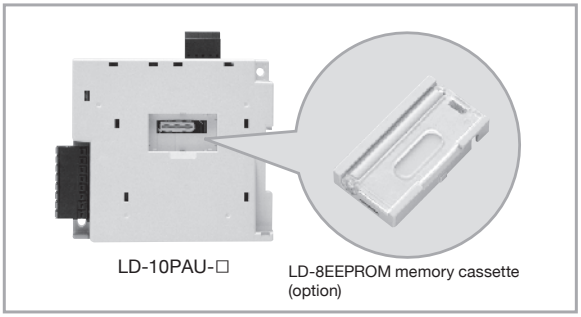

■ Parts names and terminal signal information

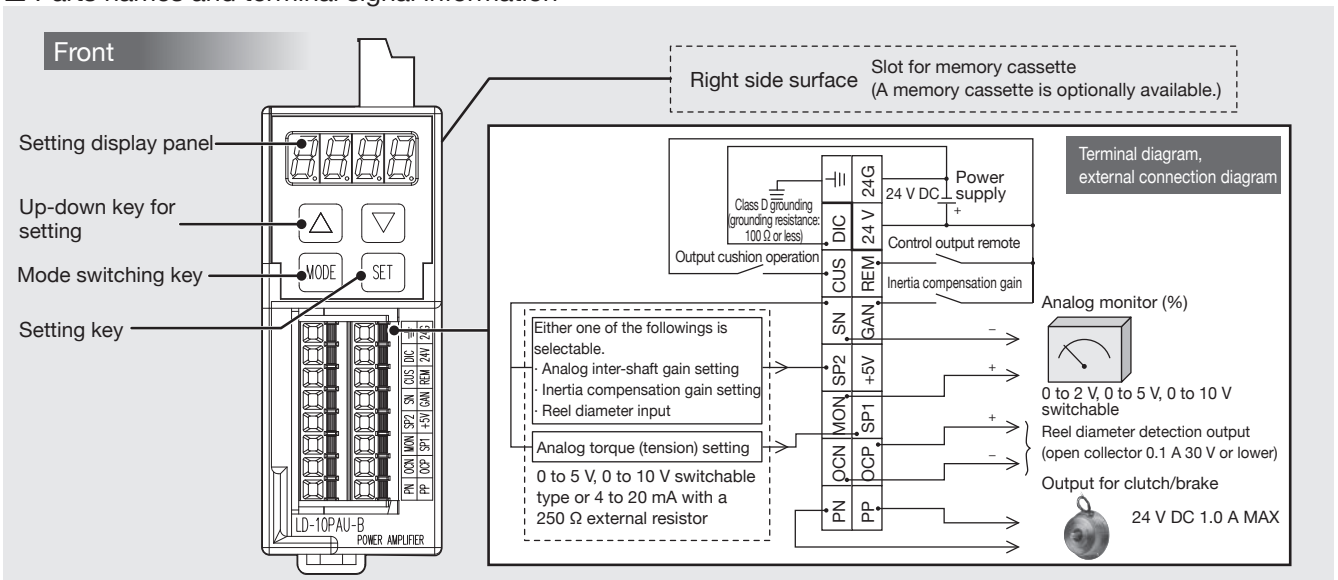

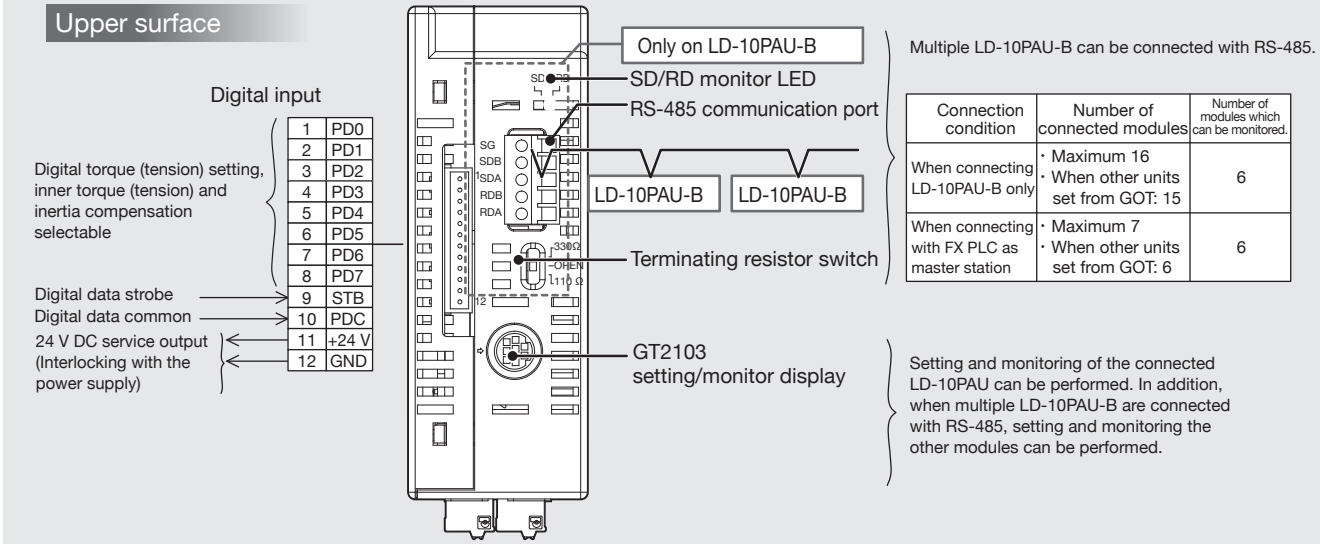

1	PD0	
2	PD1	
3	PD2	
4	PD3	
5	PD4	
6	PD5	
7	PD6	
8	PD7	
9	STB	
10	PDC	
11	+24 V	
12	GND	

Connection condition	Number of connected modules	Number of modules which can be monitored.
When connecting LD-10PAU-B only	· Maximum 16 · When other units set from GOT: 15	6
When connecting with FX PLC as master station	· Maximum 7 · When other units set from GOT: 6	6

Outline dimensions (mm)

● LD-10PAU-A

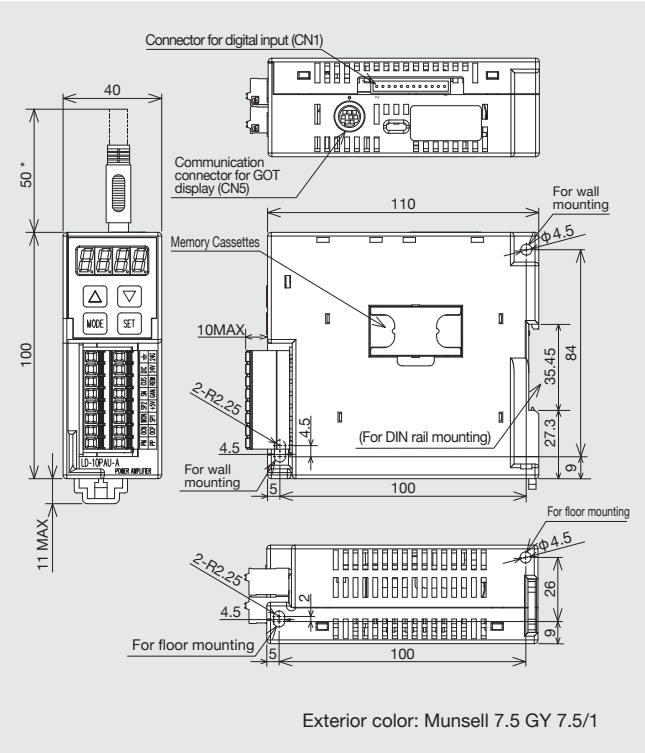

Exterior color: Munsell 7.5 GY 7.5/1

● LD-10PAU-B

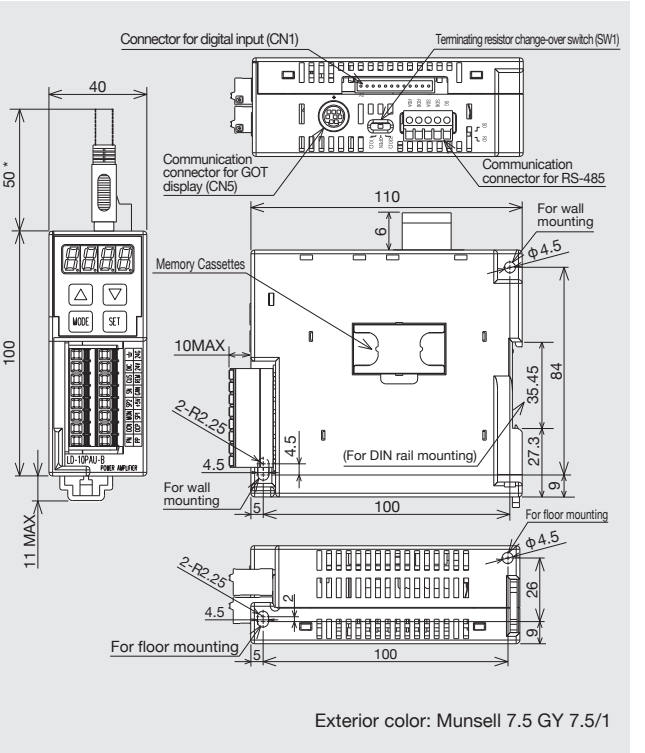

Exterior color: Munsell 7.5 GY 7.5/1

* When using the GOT display communication connector (CN5) and digital input connector (CN1), secure a space of 50 mm or more on top of the main unit.

Specifications

Item		Specifications				
Power supply	Input	24 to 29 V DC, power consumption: 40 VA, inrush current: 30 A 1 ms, allowable momentary power failure time: 5 ms				
	Output	Service power supply for external control: 5 V DC (external resistance of 0.5 to 2 kΩ) 10 mA or less				
Contact signal	Input	Control output remote ON/OFF (ON: Output OFF, OFF: Output ON)				ON current = Approx. 5 mA
		Output cushion operation ON/OFF (ON: Cushion disabled/OFF: Cushion enabled)				
		Inertia compensation gain Enable/Disable				
		Digital input (12-pin connector) Parallel torque setting or external torque selection (low-order 4 bits), inertia compensation gain selection (high-order 4 bits) Memory value selection				ON current = Approx. 5 mA
	Output	Reel diameter detection output (open collector output)				0.1 A (resistive load) 30 V or less
Analog Signal	Input	Torque (tension) setting Input resistance: 36 kΩ				0 to 5 V, 0 to 10 V switching, with 250 Ω external resistor 4 to 20 mA supported
		Select from “output inertia compensation gain setting, inter-shaft correction gain setting, reel diameter input.” Input resistance: 36 kΩ				
	Output	Output%monitor output 0 to 2 V, 0 to 5 V, 0 to 10 V switching, Load resistance: 1 kΩ or more				
Control output		Powder clutch/brake for 24 V DC system, 24 V DC, 0 to 1.0 A				
Weight		300 g				
Installation method		DIN rail, floor surface, wall surface mounting				
Environmental specifications	Operating ambient temperature	-5 to +55° C				
	Operating ambient humidity	35 to 85% RH (no condensation)				
	Storage temperature range	-25 to +75° C				
	Vibration resistance		Frequency	Acceleration	Half amplitude	10 times each in 3 axial directions (total 80 minutes each)
		DIN rail installation	10 to 57 Hz	–	0.035 mm	
			57 to 150 Hz	4.9 m/s^2	–	
		Direct installation	10 to 57 Hz	–	0.075 mm	
			57 to 150 Hz	9.8 m/s^2	–	
	Impact resistance	98 m/s^2 ···· 3 times each in 3 axial directions				
	Power noise withstand level	Noise tolerance 500 Vp-p, using a noise simulator with noise width of 1 μs and frequency of 30 to 100 Hz				
	Withstand voltage	500 V AC for 1 minute (between all terminals together and the grounding terminal)				
	Insulation resistance	5 MΩ or more when measured with 500 V DC insulation resistance tester (between all terminals together and the grounding terminal)				
	Grounding	Class D grounding (100 Ω or less, common grounding with strong power field not possible)				
	Operating environment	Environment must be free of corrosive or flammable gases as well as conductive dust, and must have low levels of dust.				

External connection

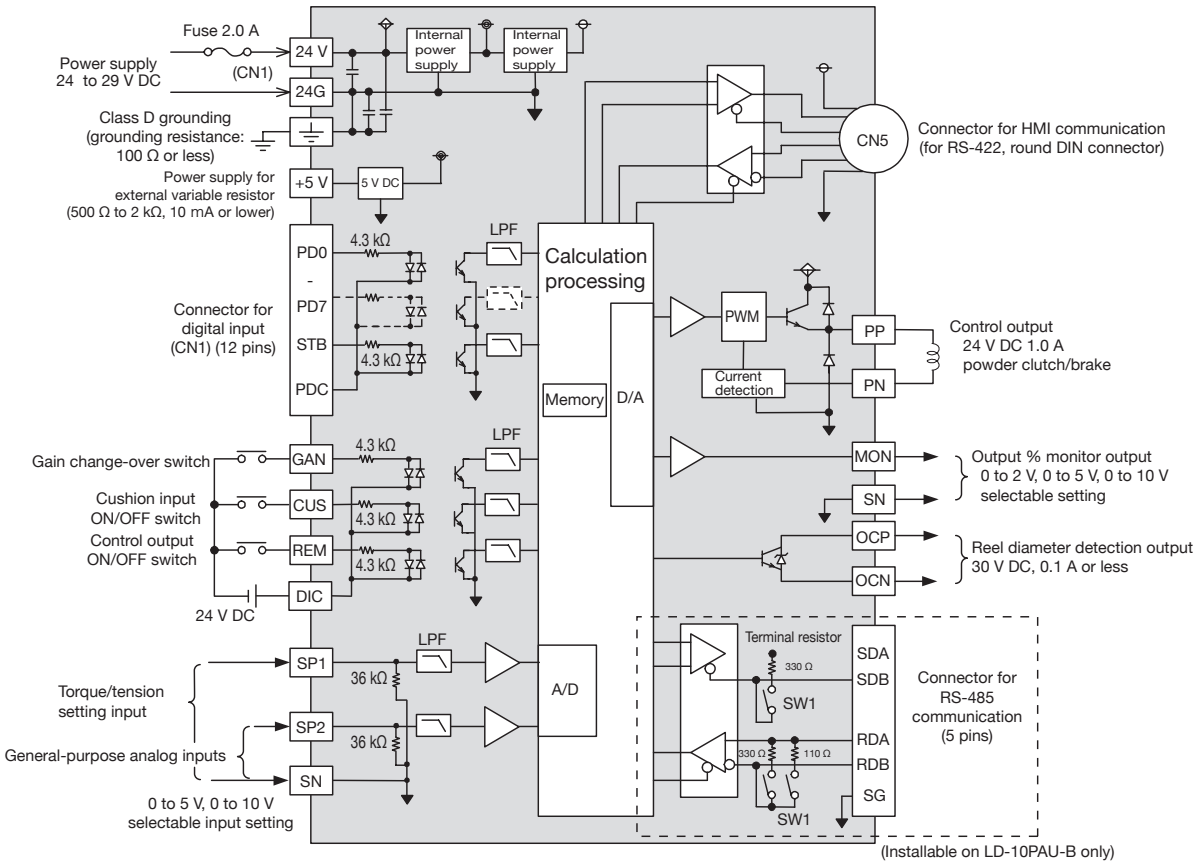

Precaution

1. Connect a fuse (2 A) to the outside for protection from short-circuit between 24 V and GND of CN1.
2. When a short circuit occurs between PP and PN, output is shut down for product protection.
3. When shutting off the control output externally by using relays or switches, the short-circuit protection circuit is activated by back EMF. So, provide a commutation circuit between PP and PN.

(Example) Switching of 2-shaft clutch/brake

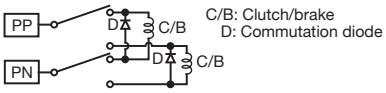

● Terminal layout

PN	OCN	MON	SP2	SN	CUS	DIC	⏚	24G
PP	OCP	SP1	+5V	GAN	REM	24V		

LM-10WA-CCL tension meter

This tension meter features flexible expandability, and supports centralized control using a network and communication for systems requiring multiple tension controls in machines that process and manufacture not only general materials such as films, metallic foils, paper, foods and electric wires but also special films and metallic foils used in lithium ion batteries, solar batteries, LCD panels, etc.

Features

● Allows detector inputs for up to 4 shafts

The LM-10WA-CCL tension meter is supplied together with one LM-10WA-TAD tension detector input adapter.
Adding a tension detector input adapter (option) enables inputs from the tension detectors of up to 4 shafts.

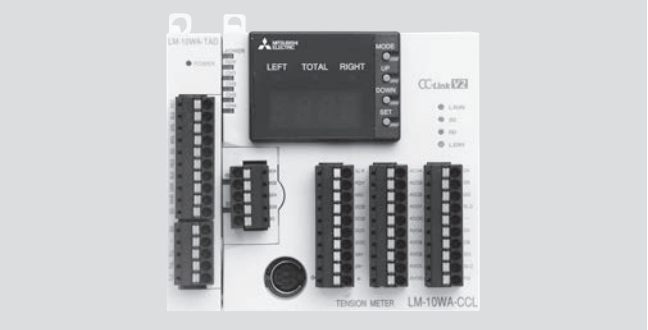

● Compliance with standards

EN standard: EC directive/CE marking (EMC directive) compliant
* For details, refer to the instruction manual.

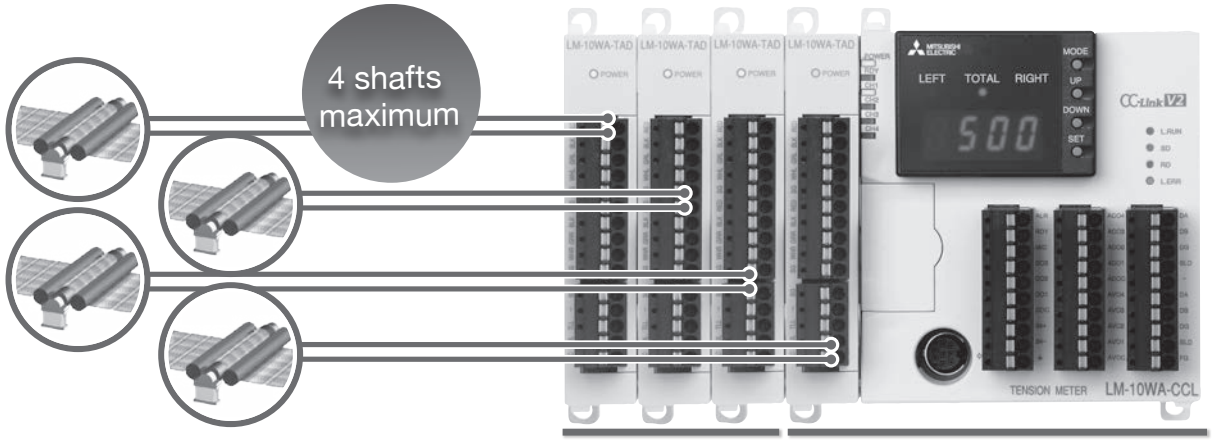

LM-10WA-TAD tension detector input adapter (option: up to 3 adapters)

LM-10WA-CCL (supplied with one LM-10WA-TAD tension detector input adapter as an accessory)

● Easy display and tension meter operation setting also enabled with internal display

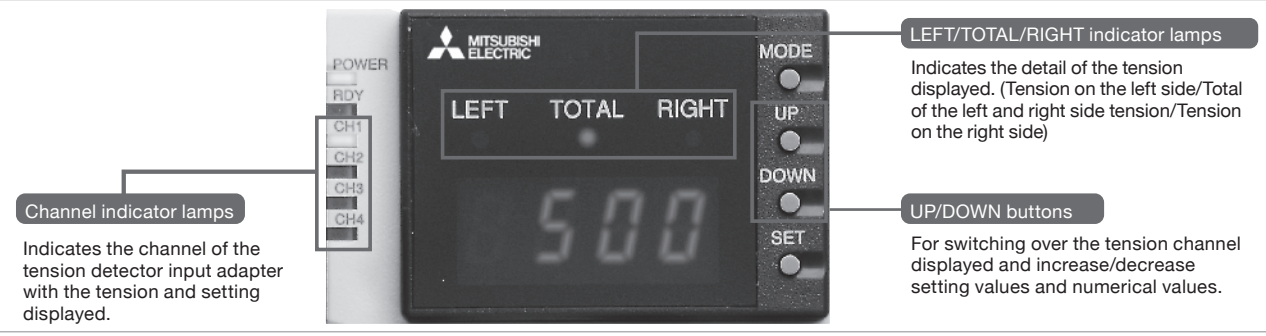

LEFT/TOTAL/RIGHT indicator lamps
Indicates the detail of the tension displayed. (Tension on the left side/Total of the left and right side tension/Tension on the right side)

Channel indicator lamps
Indicates the channel of the tension detector input adapter with the tension and setting displayed.

UP/DOWN buttons
For switching over the tension channel displayed and increase/decrease setting values and numerical values.

● Connecting to a GOT display enables display and operation with custom screens from the panel.

By using the drawing software for the GOT2000 series, original tension display and setting change screens can be created.
For the sample screen for the GT2103, consult your local Mitsubishi Electric representative.

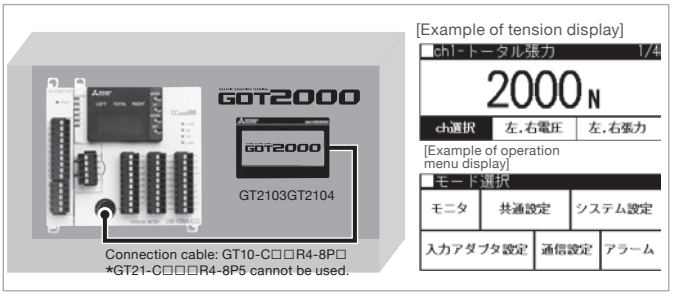

● Digital I/O terminals and analog output terminals
Supports actual voltage display of tension detector

■ Digital input
- RDY input and alarm reset input
- Free setting output: Set up to 3 of the following functions:
(RDY output, excessive input, left/right monitor unbalance, large inter-CH data deviation, network alarm generation, system alarm generation)

■ Analog outputs
- Voltage output (CH1 to CH4): 4-point output range selectable
- Current output (CH1 to CH4): 4-point output range selectable

■ Actual voltage of the tension detector
The built-in display displays the actual voltage of the tension detector. Signals can be checked easily when a problem occurs.

● Functions that enhance ease of use

■ Alarm history function
Up to 8 alarms are saved as history. The alarm notification method and action can be set.

■ Password protection function
Change of “unchangeable items in RDY state” can be disabled.

■ Reading from and writing to Excel® using MX Sheet
The optional MX Sheet is available to read the tension and write the setting value to Excel®.

■ Backup function and setting value copy function using the memory cassette
The tension meter setting values can be automatically backed up. In addition, the setting values can also be copied to multiple tension meters.

● Equipped as standard with the remote device station function of CC-Link V2 (Ver. 1.10 and Ver. 2.00)
Easy connection to FX series PLC via RS-485 communication interface

It is easy to centrally manage the tension with the PLC, check the alarm of the tension meter, and change/adjust the setting.
The remote device station function of open field network CC-Link V2 for connecting various FA equipment in wire-saving mode is included as standard.
By attaching an optional RS-485 communication interface (LM-10WA-485), the unit can be easily connected to the FX series PLC as a “slave station for N:N networks.”.

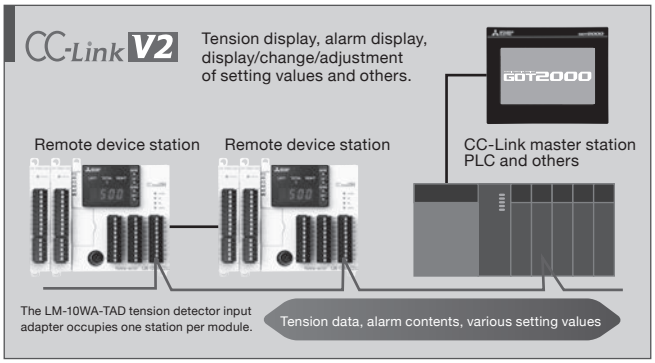

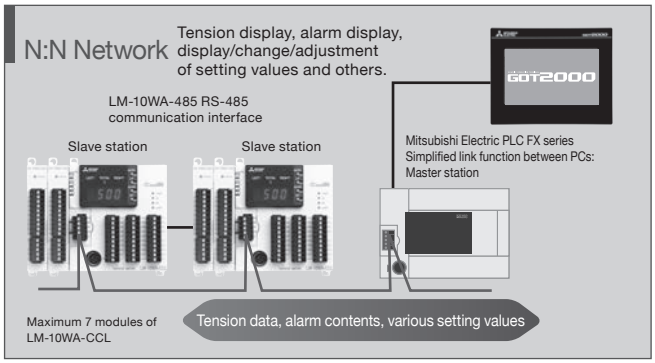

Outline dimensions (mm)

● LM-10WA-CCL

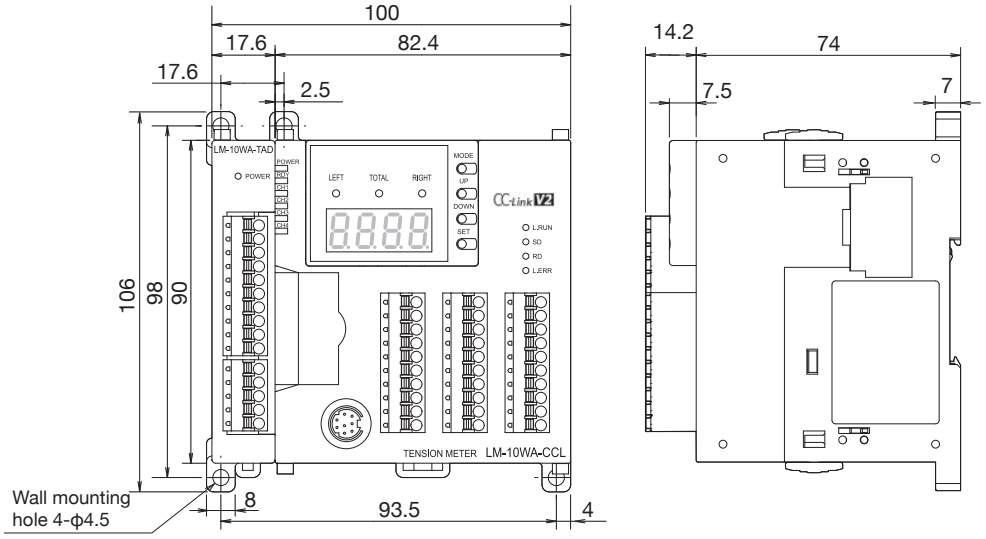

Exterior color: Munsell 0.08GY/7.64/0.81

● Option: Tension detector input adapter LM-10WA-TAD

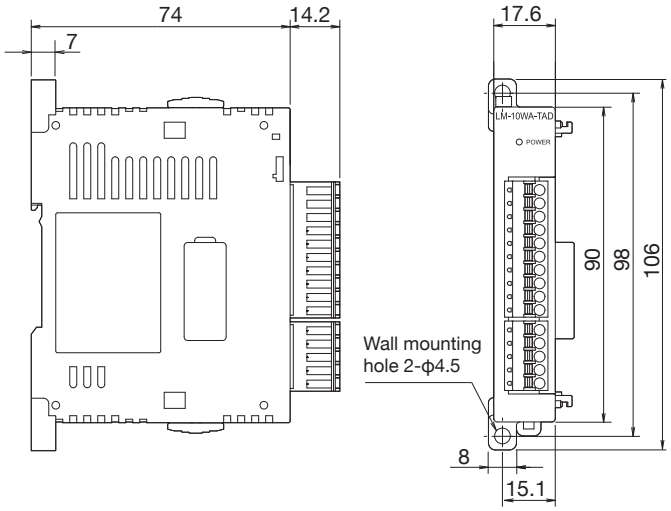

Exterior color: Munsell 0.08GY/7.64/0.81

External connection

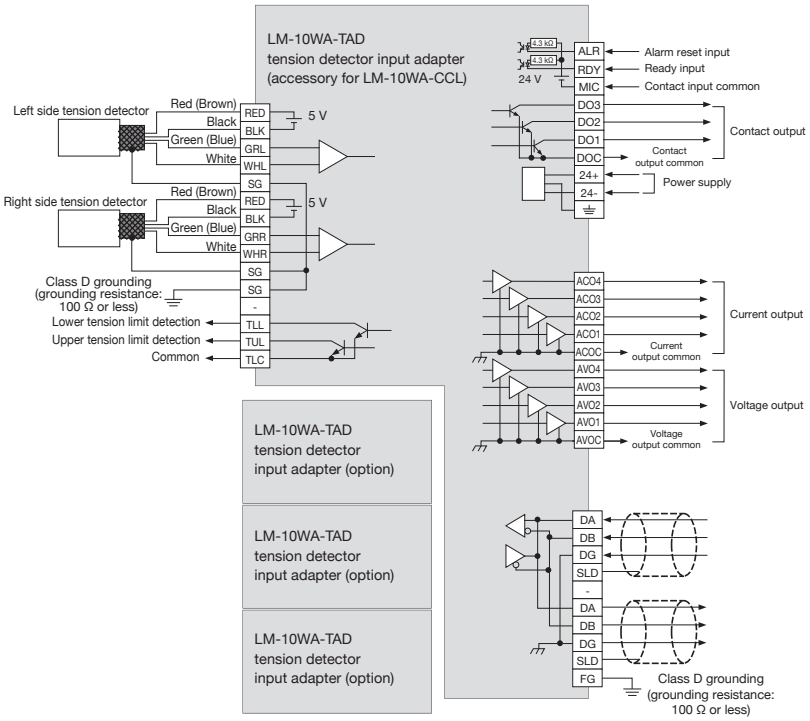

Specifications

Item	Specifications
Ambient temperature	Operating: -5 to +55°C, Storage: -25 to +75°C
Operating ambient humidity	35 to 85% RH (no condensation)
Vibration resistance (total 80 minutes each)	DIN rail installation: 10 to 57 Hz – 0.035 mm; 57 to 150 Hz – 4.9 m/s^2 – Direct installation: 10 to 57 Hz – 0.075 mm; 57 to 150 Hz – 9.8 m/s^2 – 10 times in each of X, Y and Z directions
Impact resistance	98 m/s^2 ····· 3 times each in 3 axial directions
Power noise withstand level	Noise voltage 500 Vp-p, using a noise simulator with noise width of 1 μs and frequency of 30 to 100 Hz
Withstand voltage	500 V AC for 1 minute (between all terminals together and the grounding terminal)
Insulation resistance	5 MΩ or more when measured with 500 V DC insulation resistance tester (between all terminals together and the grounding terminal)
Grounding	Class D grounding (100 Ω or less, common grounding with strong power field not possible)
Operating environment	Environment must be free of corrosive or flammable gases as well as conductive dust, and must have low levels of dust.

[LM-10WA-CCL specifications]

● Function specifications

Item		Specifications
Setting procedure		Parameters can be set by button operation on the internal setting display.
Tension signal	Number of input channels (Up to 4 channels)	Main unit: Equipped with 1-channel tension detector input adapter as standard (One detector alone as well as one each on the right and left)
		Option: Up to 3 channels of tension detector input adapters can be added.
	Support sensor	LX-TD/LX7-F tension detector, strain gauge (2 mV/V)
	Power supply for sensor	Built-in 5 V DC, 20 mA
	Alarm output	Tension lower limit detection, tension upper limit detection
Tension display	Built-in display	7-segment display on the built-in display (display by switching 1 to 4 channels by button operation)
	Analog outputs	Analog voltage output, analog current output (output range switchable)
	Others	• Display by GOT display • Reading from master station by CC-Link connection • Reading from master station by simple inter-PC link connection with FX PLC
Digital input signal		2 points (RDY input and alarm reset input)
Digital output signal		4 points (select output functions from “RDY output, excessive input, left/right monitor unbalance, large inter-CH data deviation, input adapter bus alarm, and input adapter memory alarm”)
GOT communication interface		RS-422 port: 1 channel Mitsubishi Electric GOT: Compatible with GT1020, GT1030, GT2103, and GT2104 Connection cable: GT10-C□□R4-8P□ (When the unit is connected without power supply wiring, a cable length of up to 3 m is allowed.)
CC-Link communication interface	Station type	Remote device station
	Number of occupied stations	One tension detector adapter occupies one station.
	CC-Link version	Ver. 1.10 / Ver. 2.00
Option	Tension detector input adapter	Up to 3 LM-10WA-TAD tension detector input adapters can be added. (Maximum 4 channels in total with the tension detector input adapter attached to the main unit)
	RS-485 communication	LM-10WA-485 type RS-485 communication interface can be installed for easy inter-PC link connection with the FX series PLC. * Simultaneous use of CC-Link and RS-485 communication is disabled.
	USB connectivity	LM-10WA-USB USB communication interface can be installed for connection with MX Sheet. MX Sheet can be used to read the tension value from and write the set value to Excel®. [USB cable] • MR-J3USBCBL3M (3 m) • GT09-C30USB-5P (3 m) Mitsubishi Electric System & Service Co., Ltd.
	External memory	LD-8 EEPROM type memory cassette can be installed for backup and copying settings.
Power supply		24 V DC -15% +20%, allowable momentary power failure time: 5 ms
Power consumption		20 W, inrush current: 20 A, 2 ms
Weight		Approx. 350 g
Installation method		Screwing, DIN rail

● I/O specifications

Main unit		Specifications
Contact input	READY input (RDY-DIC)	24 V DC, ON current: Approx. 5 mA
	ALARM RESET input	
Contact output	Digital output 1 to 3 (DO1 to DO3-DOC) (Output function enabled by contact output setting)	Open collector output, 0.1 A (resistive load), 30 V DC or less
Analog outputs	Analog voltage output 1 to 4 (VO1 to VO4-VOC)	Voltage output switchable (0 to 5 V, 0 to 10 V, 1 to 5 V), load resistance 1 kΩ or more
	Analog current output 1 to 4 (CO2 to CO4-COC)	Current output switchable (0 to 20 mA, 4 to 20 mA), load resistance 500 Ω or less

Tension detector input adapter		Specifications
Support sensor		LX-TD/LX7-F tension detector, strain gauge (2 mV/V)
Number of connected devices/setting		“Display total value of 1 device each on the right and left” or “1 device” can be set.
Power supply for sensor	Sensor power supply (RED-BLK)	5 V DC, 20 mA Up to 2 LX-TD tension detectors can be connected.
Tension sensor input	Left side input (GRL-WHL)	Input range switchable (LX-TD tension detector, and distortion gauge [20 mV/full scale])
	Right-side input (GRR-WHR)	
Contact output	Tension lower limit detection digital output (TLL-TLC)	Open collector output, 0.1 A (resistive load), 30 V DC or less
	Tension upper limit detection digital output (TUL-TLC)	

[Option: Tension detector input adapter LM-10WA-TAD specifications]

Tension detector input adapter		Specifications
Support sensor		LX-TD/LX7-F tension detector, strain gauge (2 mV/V)
Number of connected devices/setting		“Display total value of 1 device each on the right and left” or “1 device” can be set.
Power supply for sensor	Sensor power supply (RED-BLK)	5 V DC, 20 mA Up to 2 LX-TD tension detectors can be connected.
Tension sensor input	Left side input (GRL-WHL)	Input range switchable (LX-TD tension detector, and distortion gauge [20 mV/full scale])
	Right-side input (GRR-WHR)	
Contact output	Tension lower limit detection digital output (TLL-TLC)	Open collector output, 0.1 A (resistive load), 30 V DC or less
	Tension upper limit detection digital output (TUL-TLC)	
Weight		Approx. 80 g
Installation method		Screwing, DIN rail

● GOT device (MX Sheet)/function outline

Common device	Device per channel				Function	Monitor/ setting	Mini-mum value	Maximum value	Change during RDY
	CH1	CH2	CH3	CH4					
-	D0	D32	D64	D96	Total tension	Monitor			-
-	D1	D33	D65	D97	Left tension	Monitor			-
-	D2	D34	D66	D98	Right tension	Monitor			-
-	D3	D35	D67	D99	Output%monitor	Monitor			-
-	D4	D36	D68	D100	Left input voltage	Monitor			-
-	D5	D37	D69	D101	Right input voltage	Monitor			-
-	D6	D38	D70	D102	Input adapter version monitor	Monitor	1.00	9.99	-
-	D7 to D15	D39 to D47	D71 to D79	D103 to D111	Unavailable				
-	D16	D48	D80	D112	Sensor input type	Setting	0	1	×
-	D17	D49	D81	D113	Full scale tension	Setting	1	2000	○
-	D18	D50	D82	D114	Main tension display decimal point position	Setting	0	2	×
-	D19	D51	D83	D115	Span target tension value	Setting	1	Full scale tension	×
-	D20	D52	D84	D116	Tension detection lower limit setting	Setting	0	2000	○
-	D21	D53	D85	D117	Tension detection upper limit setting	Setting	0	2000	○
-	D22	D54	D86	D118	Tension display left gain	Setting	50.0	300.0	×
-	D23	D55	D87	D119	Tension display right gain	Setting	50.0	300.0	×
-	D24	D56	D88	D120	Tension display left bias	Setting	-50.0	50.0	×
-	D25	D57	D89	D121	Tension display right bias	Setting	-50.0	50.0	×
-	D26	D58	D90	D122	Output gain	Setting	50.0	300.0	×
-	D27	D59	D91	D123	Output bias	Setting	-50.0	50.0	×
-	D28	D60	D92	D124	Tension detection filter	Setting	0.0	2.0	○
-	D29	D61	D93	D125	Tension input filter	Setting	0.0	2	○
D126 to D127	-	-	-	-	Unavailable				
D128	-	-	-	-	Tension sampling cycle	Setting	10	60	×
D129	-	-	-	-	Tension display filter	Setting	0.5	4.0	○
D130	-	-	-	-	Output filter	Setting	0.0	4.0	○
D131	-	-	-	-	Link tension filter	Setting	0.0	4.0	○
D132	-	-	-	-	Analog monitor output mode	Setting	0	4	×
D133	-	-	-	-	Channel linkage setting	Setting	0	3	×
D134	-	-	-	-	Inter-channel linkage abnormality judgment tension	Setting	1	50	×
D135	-	-	-	-	Inter-channel linkage watch cycle	Setting	1	30	○
D136	-	-	-	-	READY input	Setting	0	1	○
D137	-	-	-	-	Alarm reset	Setting	0	1	○
D138	-	-	-	-	Password input	Setting	0	999	○
D139 to D143	-	-	-	-	Unavailable				
D144	-	-	-	-	Main system ROM Ver.	Monitor	1.00	9.99	-
D145	-	-	-	-	Memory cassette setting	Setting	0	1	×
D146	-	-	-	-	Contact output setting 1	Setting	0	6	×
D147	-	-	-	-	Contact output setting 2	Setting	0	6	×
D148	-	-	-	-	Contact output setting 3	Setting	0	6	×
D149	-	-	-	-	Transfer between main unit and input adapter	Setting	0	13	×
D150	-	-	-	-	Memory initialization	Setting	0	5	×
D151	-	-	-	-	Password setting	Setting	0	999	×
D152 to D159	-	-	-	-	Unavailable				
D160	-	-	-	-	Start station number setting	Setting	1	64	×
D161	-	-	-	-	Setting of number of occupied stations	Setting	0	Number of input adapters	×
D162	-	-	-	-	Communication speed setting	Setting	0	4	×
D163	-	-	-	-	Extended cyclic setting	Setting	1	4	×
D164	-	-	-	-	CC-Link version	Setting	1	2	×
D165	-	-	-	-	Station No. in N:N Network	Setting	0	7	×
D166 to D175	-	-	-	-	Unavailable				
D176	-	-	-	-	Alarm history 0	Monitor	0	40	-
D177	-	-	-	-	Alarm history 1	Monitor	0	40	-
D178	-	-	-	-	Alarm history 2	Monitor	0	40	-
D179	-	-	-	-	Alarm history 3	Monitor	0	40	-
D180	-	-	-	-	Alarm history 4	Monitor	0	40	-
D181	-	-	-	-	Alarm history 5	Monitor	0	40	-
D182	-	-	-	-	Alarm history 6	Monitor	0	40	-
D183	-	-	-	-	Alarm history 7	Monitor	0	40	-
D184	-	-	-	-	Alarm display time setting	Setting	0	301	×
D185	-	-	-	-	Alarm history holding setting	Setting	0	1	×

LM-10PD tension meter

The LM-10PD tension meter displays the winding, unwinding, and intermediate tension in applications that handle paper, wires, and various sheet-like materials by receiving signals from the LX7-F/LX-TD tension detector or a distortion gauge sensor, and outputs amplified signals to devices such as a recorder, external tension meter, or PLC.

Features

- Panel size of 48 × 96 realizes small size and light weight.
- Auto zero, auto span adjustment
  Zero and span adjustment of tension detector is possible with one touch.
- Digital value setting of parameters.
- Tension upper/lower limit detection function
  (detection of 2 points).
- Memory function of tension peak value.
- Usable in combination with a strain gauge type sensor.
- Each output filter can be adjusted individually.
- Manual offset/span adjustment is possible for display and output.

Panel screen configuration

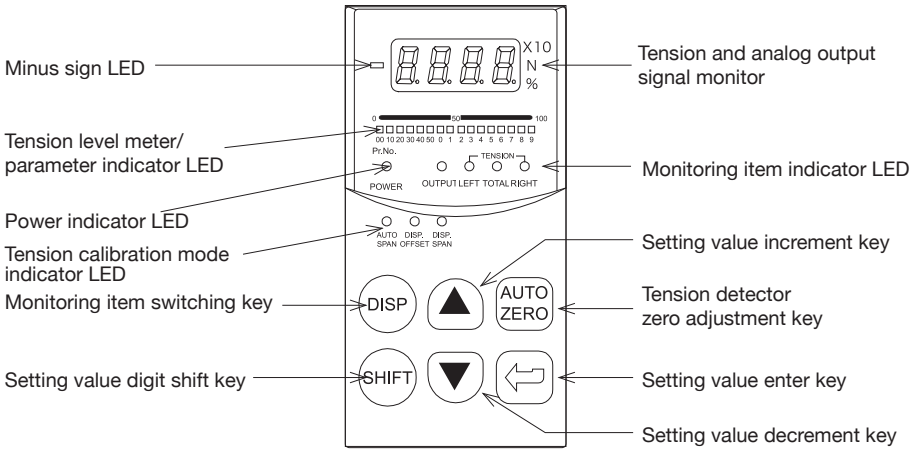

Outline dimensions (mm)

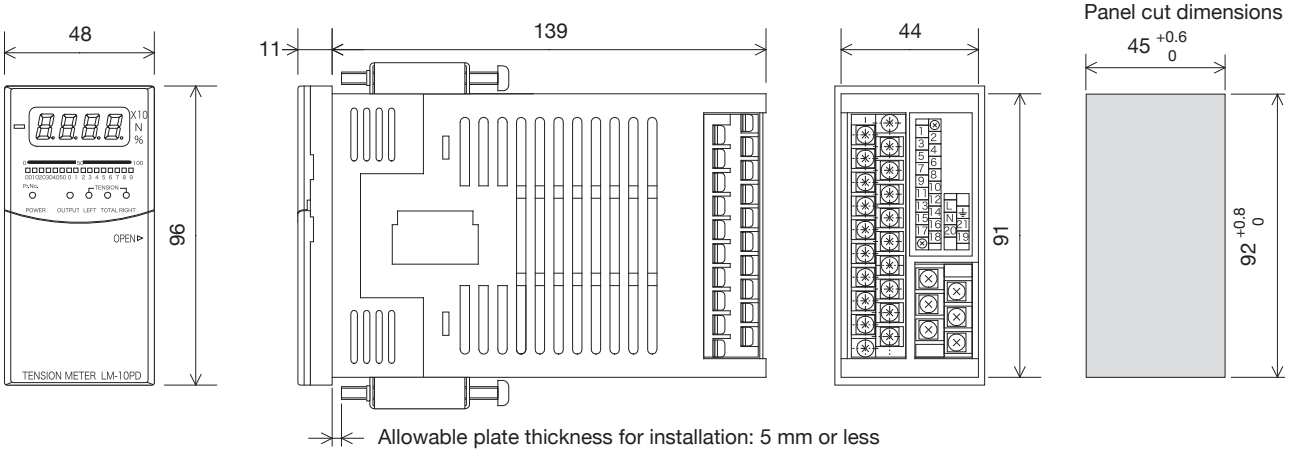

Exterior color: Munsell 7.5 GY 7.5/1
Accessories: 1 set of mounting brackets

Specifications

Item		Specifications
Power supply voltage		100 to 240 V AC (-15 to +10%), 50/60 Hz, Power consumption: 50 VA
Tension signal output		Switching between 0 to 5 V, 0 to 10 V, 1 to 5 V/FS (load resistance: 1 kΩ or more), 4 to 20 mA/FS (load resistance: 500 Ω or less)
Tension detection output		Upper and lower limit tension detection (2-point detection) Open collector output 30 V DC/0.5 A
External tension meter		DC 1 mA/FS meter (internal resistance: 1.5 kΩ or less)
Output for recorder		0 to 5 V for tension full scale (load resistance 10 kΩ or more)
Tension display		4-digit digital display with 7-segment LED. Full scale can be set within the range of 0.01 to 20000 N, unit display switching of [N] and [X10N]. Level meter display with 16 LEDs, and display switching between Left, Total, and Right
Output display		Analog output % display with 7-segment LED
Settings parameter display		LED display of item numbers and 7-segment LED display of setting value
Environmental specifications	Operating ambient temperature	0 to 55°C ····· During operation
	Operating ambient humidity	35 to 85% RH or less (no condensation) ····· During operation
	Vibration resistance	10 to 55 Hz, 0.5 mm (up to 4.9 m/s^2) , 2 hours in each of X, Y and Z directions
	Shock resistance	3 times in each of X, Y and Z directions for 98 m/s^2
	Power noise withstand level	Noise voltage 1000 Vp-p, using a noise simulator with noise width of 1 μs and frequency of 30 to 100 Hz
	Withstand voltage	1500 V AC for 1 minute (between all terminals together and grounding, between power supply terminal and input/output terminals) 500 V AC for 1 minute: Between open collector output and input/output terminals (Not insulated between input and output terminals)
	Insulation resistance	500 V DC, 5 MΩ or more by insulation resistance tester (between all terminals together and the grounding terminal)
	Operating environment	Free of corrosive and flammable gases, and must have low levels of dust.
Weight		Approx. 500 g
Installation method		Panel mounting

External connection

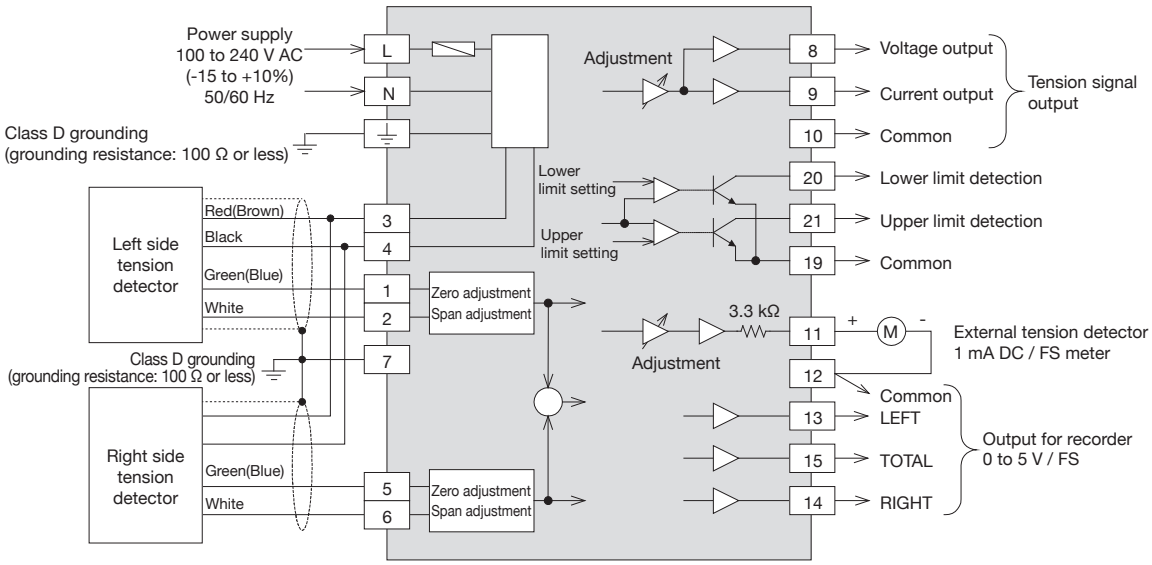

When a strain gage type tension detector is used.

2 mV DC/V

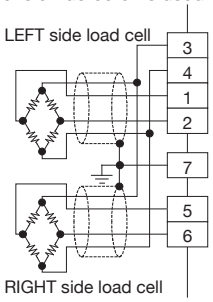

LM-10TA tension amplifier

The LM-10TA tension amplifier is used in combination with the LX-TD/LX7-F tension detector and outputs signals that correspond to winding, unwinding, or countershaft tension (to the recorder, external tension meter, controller, etc.) in applications that handle paper, electric wire, or various sheet-like materials.

Features

● Compact profile

Compact profile made possible by supporting only the essential functions. It fits easily inside a control panel or in almost any space on a machine.

● Free choice of applications

By attaching an external meter, digital or analog can be freely chosen for tension display. It can also be used easily as an input signal to the tension controller.

● Ideal for centralized display

By using a PLC and display together, tension display for each process can be performed intensively.

● Easy remote display

Using the output signal (DC 0 to 5 or 10 V), tension display can be easily done at a remote place.

● Easy recording of tension fluctuations

Tension data can be recorded by connecting a recorder and using recorder signals.

● DIN rail installation enabled

Outline dimensions (mm)

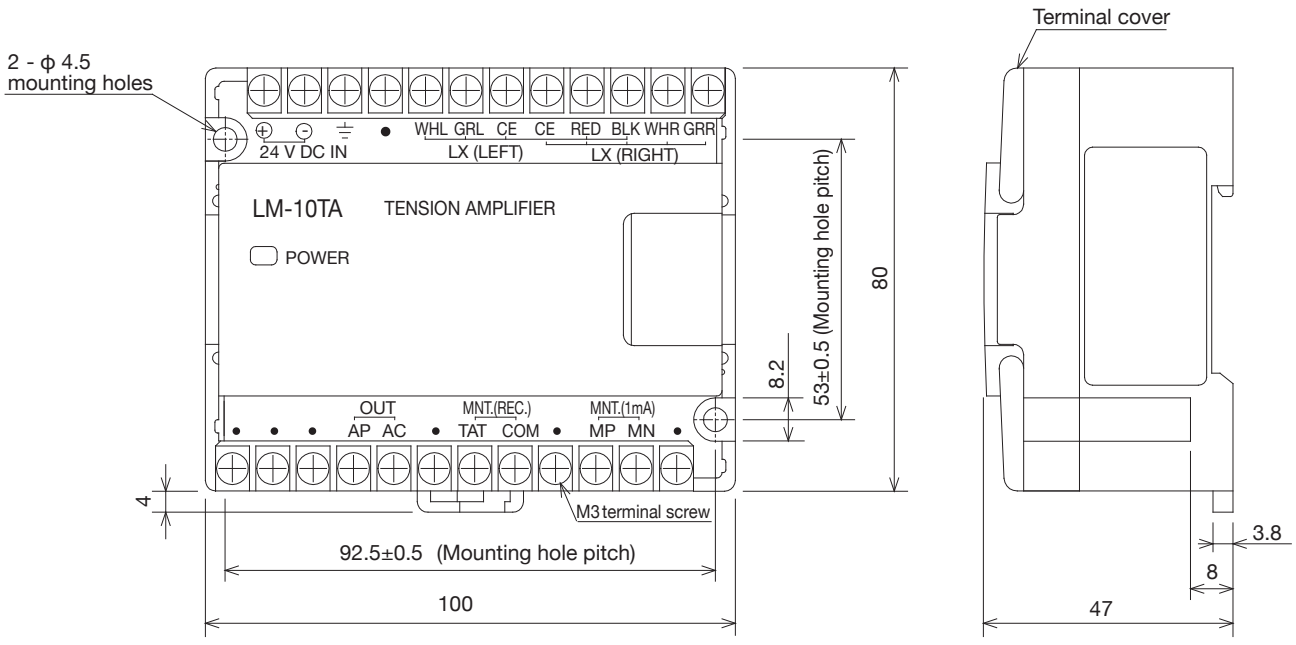

Exterior color: Munsell 7.5 GY 7.5/1

Specifications

Item		Specifications
Power supply	Input	24 V DC ±15% Power consumption: Approx. 0.2 A
	Output	Tension detector power supply: •••••• Up to 2 LX-TD/LX7-F tension detectors can be connected.
Output signal		Tension signal ····· Adjustable in the range of (0 to 5) to (0 to 10) V DC at tension scale Load resistance: 1 kΩ or more Recorder signal ····· Adjustable in the range of (0 to 5) to (0 to 10) V DC at tension scale Load resistance: 100 kΩ or more Signal for external tension meter ····· 1 mA DC ammeter Load resistance: 300 Ω or less
Adjustment variable resistor		For zero/span adjustment (4 pieces) For external tension meter (1 piece) } Built-in adjustment window
Weight		Approx. 200 g
Installation method		Screwing, DIN rail
Environmental specifications	Operating ambient temperature	0 to 55°C
	Operating ambient humidity	35 to 85% RH (no condensation)
	Vibration resistance	10 to 55 Hz, 0.5 mm (up to 19.6 m/s^2), 2 hours each in 3 axial directions
	Impact resistance	98 m/s^2 3 times each in 3 axial directions
	Power noise withstand level	Noise voltage 1000 Vp-p, using a noise simulator with noise width of 1 μs and frequency of 30 to 100 Hz
	Insulation resistance	500 V DC, 5 MΩ or more when measured with insulation resistance tester
	Grounding	Class D grounding, grounding resistance 100 Ω or less
	Operating environment	Environment must be free of corrosive gases and conductive dust, and must have low levels of dust. Free from rain and water drops.

External connection

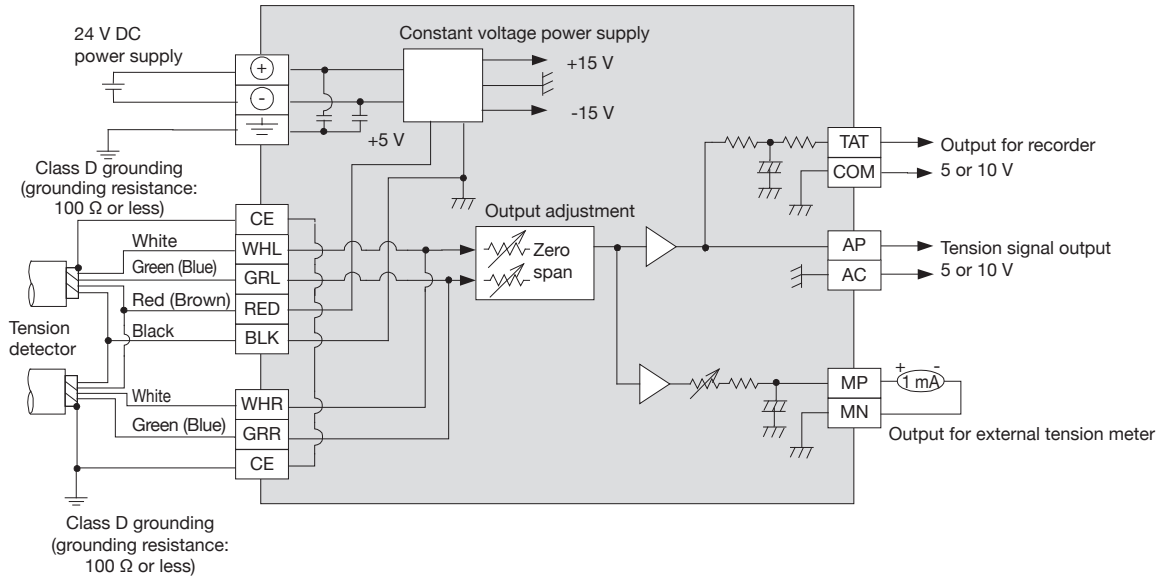

LX-TD/LX-TD-928 tension detector

The LX-TD/LX-TD-928 tension detector is used in combination with a feedback type tension controller such as LE7-40GU-L, LE-10WTA-CCL, LE-40MTA(-E), LE-40MTB(-E), or LE-30CTN.
It can also be used in combination with the LM-10PD or LM-10WA-CCL tension meter to implement tension monitoring.

Features

- The width dimension is 48 mm (in the LX-050TD model), and it helps to miniaturize a device.
- Wall mounting and floor mounting are available. A Connector connection method is adopted, and a plate for mounting a pillow block unit (option) is provided.

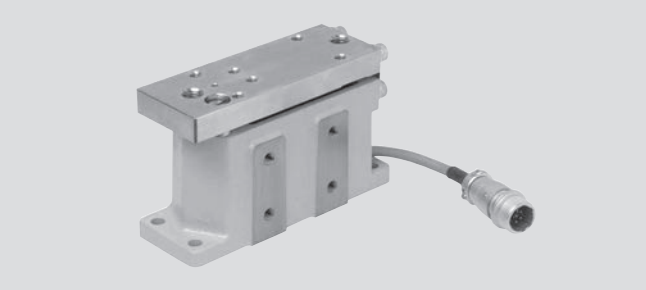

Outline dimensions (mm)

Fig. 1

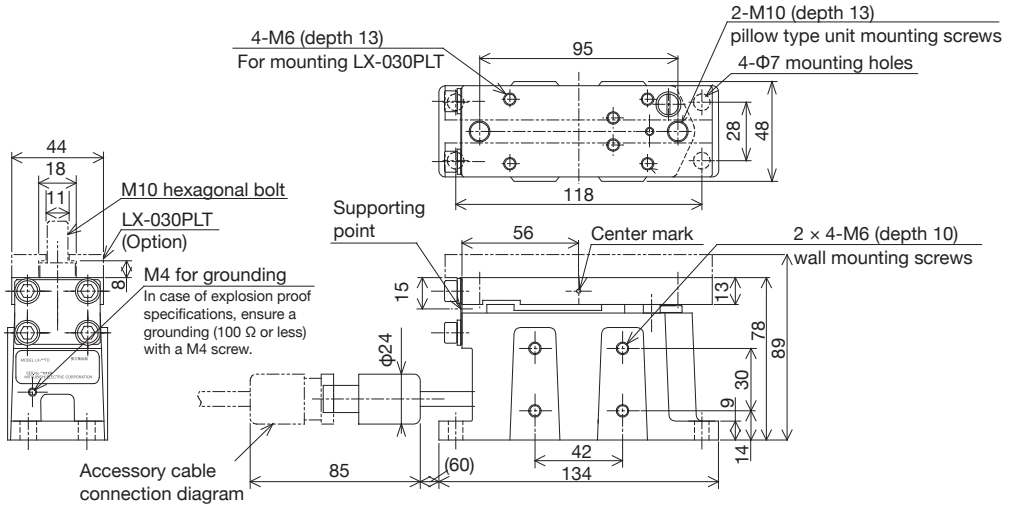

Paint color: Munsell 10 GY 7.5/1

Fig. 2

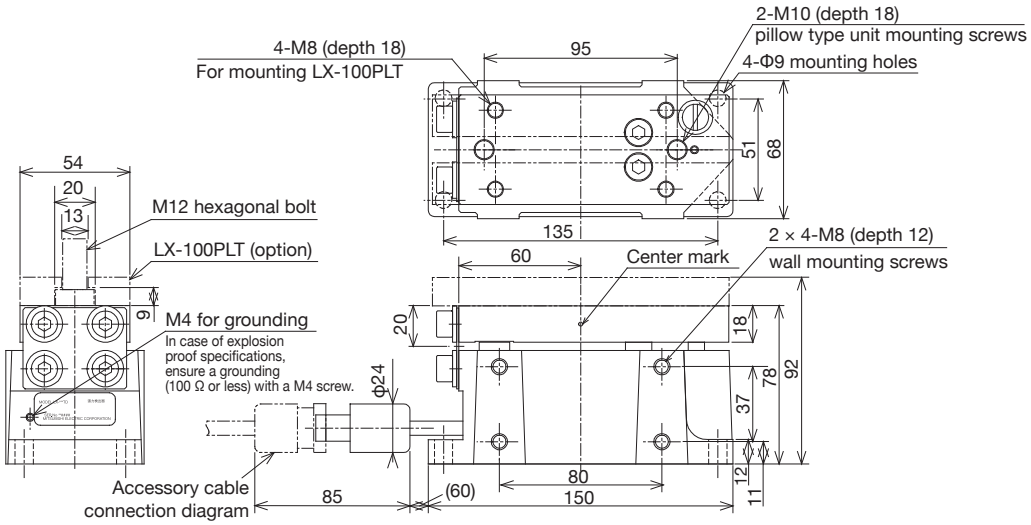

Paint color: Munsell 10 GY 7.5/1

Specifications

Item		Specifications					
Model name	Non-explosion-proof type	LX-005TD	LX-015TD	LX-030TD	LX-050TD	LX-100TD	LX-200TD
	Explosion-proof type*	LX-005TD-928	LX-015TD-928	LX-030TD-928	LX-050TD-928	LX-100TD-928	LX-200TD-928
Rated load (N)		50	150	300	500	1000	2000
Applicable load direction		Both compression and tension directions					
Installation method		Floor mounting, wall mounting, ceiling mounting					
Cable specifications		Non-explosion-proof type: 7 m (accessory), Explosion-proof type: 20 m (accessory)					
Weight (kg)		1.8				3	
Operating conditions		Ambient temperature: -5 to +60°C, Vibration: 2 m/s^2 or less					
Outline dimensions		Fig. 1				Fig. 2	
Applicable bearings		UCP201-204 UCP205 can also be used by using the optional LX-030PLT.				UCP201-204 UCP205 and UCP206 can also be used by using the optional LX-100PLT.	

* Explosion-proof structure is intrinsically safe construction Ex ia II B T4. LX-05BRR-928 safety barrier is separately required.
* Can be manufactured with the nickel plating specifications. Inquire separately.

● Selecting a tension detector

This section describes the method of selecting a tension detector corresponding to an arbitrary mounting angle and paper passing angle. Depending on the installation conditions, selection may not be possible. In this case, change the conditions and perform the selection calculation again.

· Calculating the reference angle β

Find the reference angle β from the height C of the pillow block unit.

In the figure below, the intersection of the reference line (the line connecting the fulcrum of the detector and the load center), the mounting plane, and X axis (horizontal line) is the origin of the coordinate.

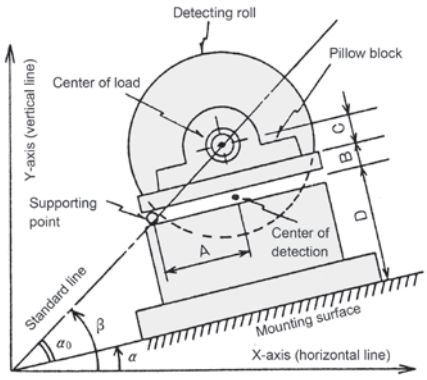

Detection type	A	B	Recommended pillow block unit
LX-005 to 050TD	56.3	15	UCP-201 to 204
LX-005 to 050TD-928	56.3	15	UCP-201 to 204
LX-100, 200TD	60.3	20	UCP-201 to 204
LX-100, 200TD-928	60.3	20	UCP-201 to 204

A: Distance between the detector's supporting point and the center of the measurement point

B: Height between the detector's supporting point and the reel mounting surface

C: Height of the pillow block unit

A: Mounting angle α = 0 to 360

α_0: Fulcrum angle $\alpha_0 = \tan^{-1}\frac{B + C}{A}$ .....(1)

β: Reference angle $\beta = \alpha \pm \alpha_0$ (+ α_0 or - α_0 depending on the position of the fulcrum)

· Component force of load and effective load

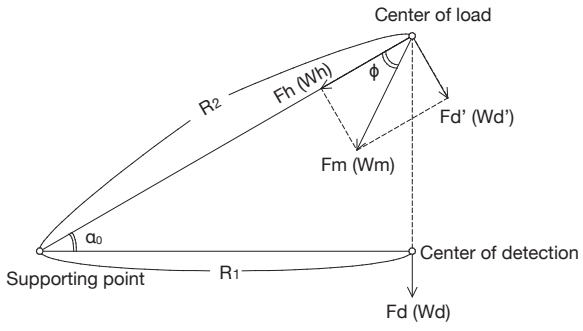

- Tension components
  Fm: Allowable tension per detector (N)
  Fh: Tension component that pulls in the direction of the supporting point (N)
  Fd: Tension component that pulls in the direction of the measurement point center (N)

- Roll load components
  Wm: Roll load per detector (N)
  Wh: Roll load component that is applied in the direction of the supporting point (N)
  Wd: Roll load component that is applied in the direction of the measurement point center (N)

$Fh = Fm \cos\phi$

$Fd = Fd'\frac{R_2}{R_1} = Fm \sin\phi/\cos\alpha_0$

Use the same formula to calculate roll load components.

● Calculating the tension components

- Compression load

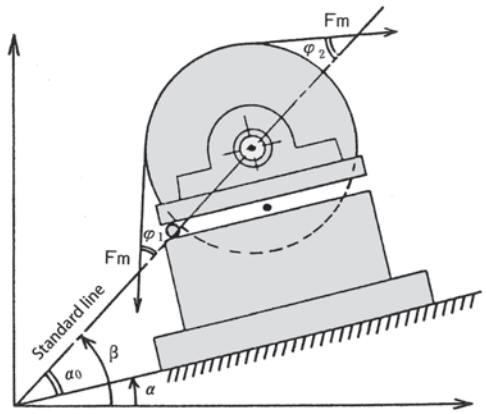

Fh = Fm (cosϕ1 - cosϕ2) ..... (2)'

Fd = Fm (sinϕ1 + sinϕ2)/cosα0 ..... (3)'

- Expansion load

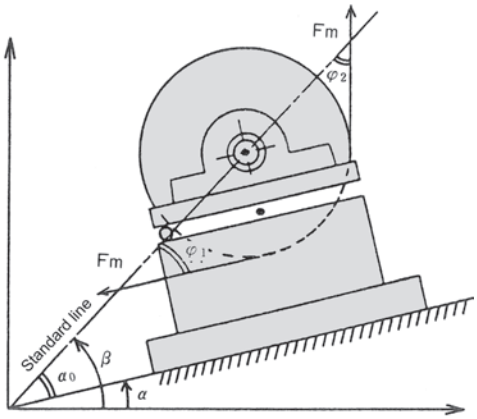

Fh = Fm (cosϕ1 - cosϕ2) ..... (2)"

Fd = -Fm (sinϕ1 + sinϕ2)/cosα0 ..... (3)"

● Calculating the roll load components

- Compression load

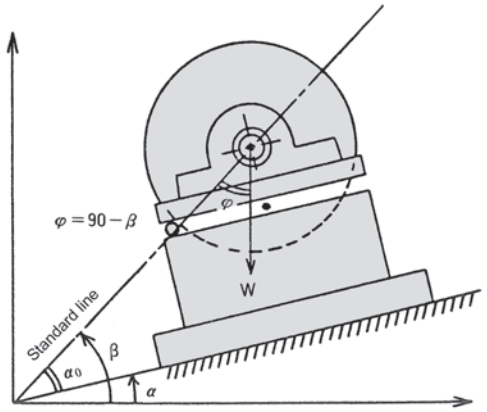

Wh = Wmcosϕ = Wmsinβ ..... (4)"

Wd = Wmsinϕ/cosα0 = Wmcosβ/cosα0 ..... (5)"

- Expansion load

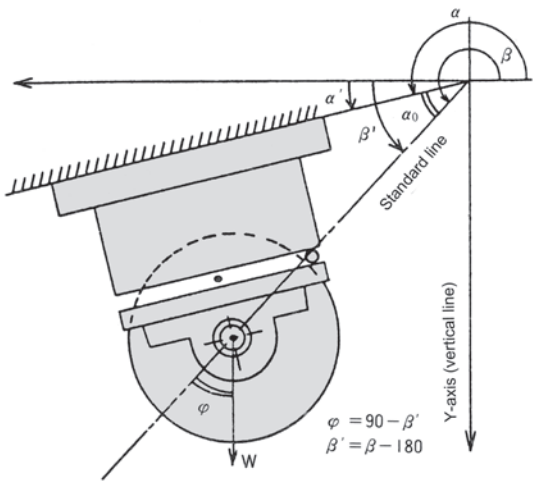

Wh = -Wmcosϕ = Wmsinβ ..... (4)"

Wd = -Wmsinϕ/cosα0 = Wmcosβ/cosα0 ..... (5)"

● Selection conditions

Select a detector whose load rating (G0) meets the following criteria.

(1) Roll load component toward the detection center point Wd = |Wmcos β/cos α0| ≤ 0.8 G0
(0 adjustment range. Ideally this value should be made as small as possible.)

(2) Tension component toward the detection center point Fd = |±Fm (sin ϕ1 + sin ϕ2) / cos α0 | ≥ 0.2 G0
(From the span adjustable range of the control device, the tension component Fd at the maximum tension is set to 20% or more of the rated load. Ideally this value should be as large as possible.)

(3) Total load that is applied in the direction of the measurement point center Gd = |Fd + Wd|

= | [± Fm (sin ϕ1 + sin ϕ2) + W m cos β] /cos α0 |

≤ G0 (when using a single detector with wire, etc. for detector protection)
≤ 0.8 G0 (when using 2 detectors with a wide material, etc. Considering the fluctuation due to tension of the material, etc. as 20%, assume it is 80% or less of the rated load.)

(4) Supporting point load that is applied to the detector Gh = |Fh + Wh|

= |Fm (cosϕ1 - cosϕ2) + Wmsinβ| ≤ 2G0 (for fulcrum protection)|

● Sample calculation

- Conditions

  Tension: F = 150 to 400 N

  Roll load: W = 250 N (including pillow block unit weight × number of units)

  Material angle: $\theta_1 = 60°$, $\theta_2 = 30°$

  Number of detectors: N = 2

  Center height of pillow block unit: 33.3 mm (UCP-204)

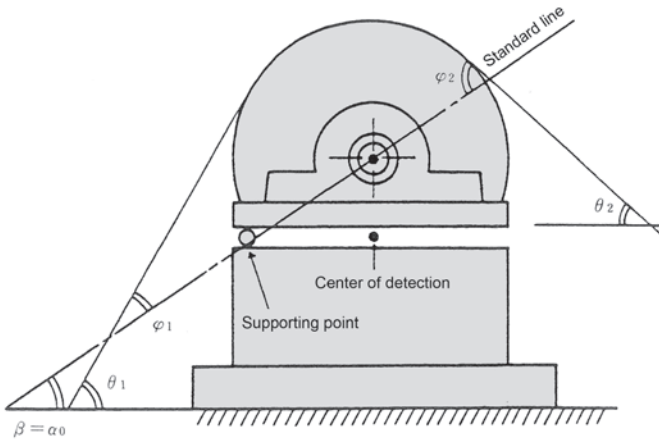

Mounting angle α = 0 (horizontal mounting)

● Detailed calculation

Temporarily select LX-100TD meeting G_0 = 1000 N.

Supporting point angle: $\alpha_0 = \tan^{-1}((20+33.3)/60.3) = 41.47°$

Reference angle: $\beta = 41.47°$

Paper feeding angle: $\phi_1 = \theta_1 - \alpha_0 = 18.53°$
$\phi_2 = \theta_2 + \alpha_0 = 71.47°$

$Fd = 400 (\sin 18.53° + \sin 71.47°)/\cos 41.47°$
$= 675.8$ N

Suppose the ratio of Fd to the rated load is Fd',

$Fd' = Fd/(N \times G_0) = 33.79\%$ ≥20% This is within the span adjustment range.
When accuracy is required, however, the larger the percentage, the better. 35% or more is recommended.

$Wd = 250 (\cos 41.47°/\cos 41.47°)$
$= 250$ N

Suppose the ratio of Wd to the rated load is Wd',

$Wd' = Wd/(N \times G_0) = 12.5\%$ ≤ 80%
≥ -80%
This is within the zero adjustment range.

Suppose the ratio of total load Gd to the rated load is Gd',

$Gd' = Fd' + Wd' = 46.29\%$ ≤ 80%
≥ -80%
This is within the allowable load range.
This is the case where the tension of the material is assumed to be 20%.
It can be used up to ±100% in the case of a single detector for wires, etc.

Similarly,
Gh = 252.1 + 165.6 = 417.7 N
Assuming that the ratio of Gh to the rated load is Gh',

$Gh' = Gh/(N \times G_0) = 20.89\%$ ≤ 100%
≥ -100%
This is within the allowable load range.

● Selection result

Based on the above calculation, the use of 2 LX-100TD tension detectors is recommended.

LX-05BRR-928 safety barrier

The LX-05BRR-928 safety barrier used in combination with the LX-TD-928 tension detector satisfies the explosion-proof structured electrical machinery apparatus type inspection guide (November 1996), and is licensed for use in designated explosive atmospheres by the Technology Institution of Industrial Safety.
(Target explosive gas explosion grade IIB, ignition degree T4) When detecting tension in an explosive gas such as in a coater or laminator, a safety barrier is connected between the tension meter and tension controller and LX-TD-928 tension detector. In an atmosphere with explosion hazards, only an LX-□□□TD-928 tension detector certified in combination with LX-05BRR-928 can be used.

Features

● Explosion-proof structure (intrinsically safe construction Exia II B T4)

By using a dedicated safety barrier, tension detectors can be used even in an explosive atmosphere.

- Acquired new standard Ex consistent with international standard

  The product may be exported to countries such as Korea where only the Ex standard can be used. (Note that details vary from country to country.)

- Acquired Explosive Gas Classification IIB, Temperature Grade T4

  The product is now used even in atmospheres of ethylene, diethyl ether, etc. where it could not be used before.

- High performance

  This product with explosion-proof performance has the same tension detection accuracy, ease of installation, and high performance as the LX-TD series.
  Thus the product can be connected to connectors and mounted on the wall, and can be controlled stably in a wide range of applications.

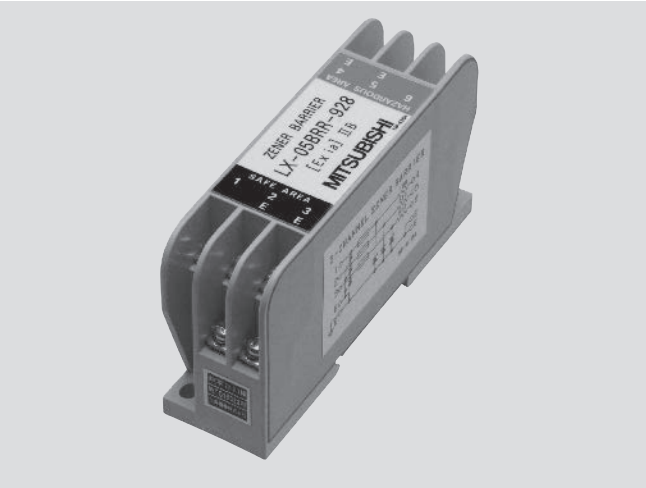

Outline dimensions (mm)

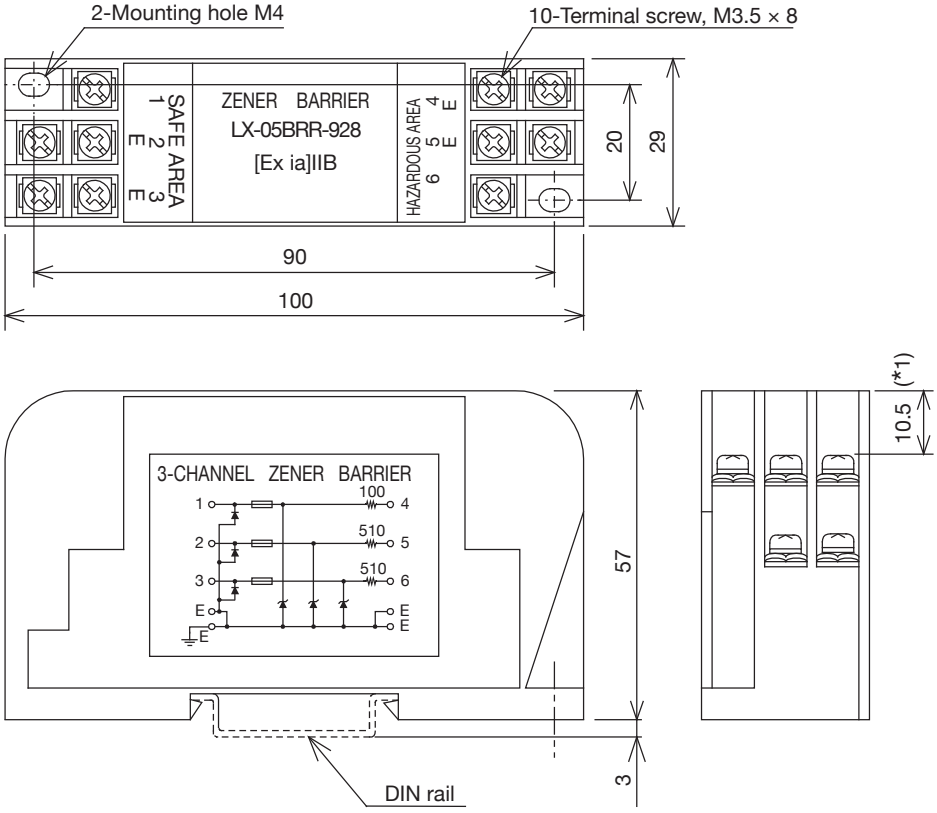

*1: If the protection class of IP20 is not satisfied with the external wiring connected to the external wiring connection part of the safety barrier, use the safety barrier by storing it in a container satisfying IP20 or more. (The dimension of *1 shall be set to 7 mm or more with the terminal attached.)

External connection (I/O lines)

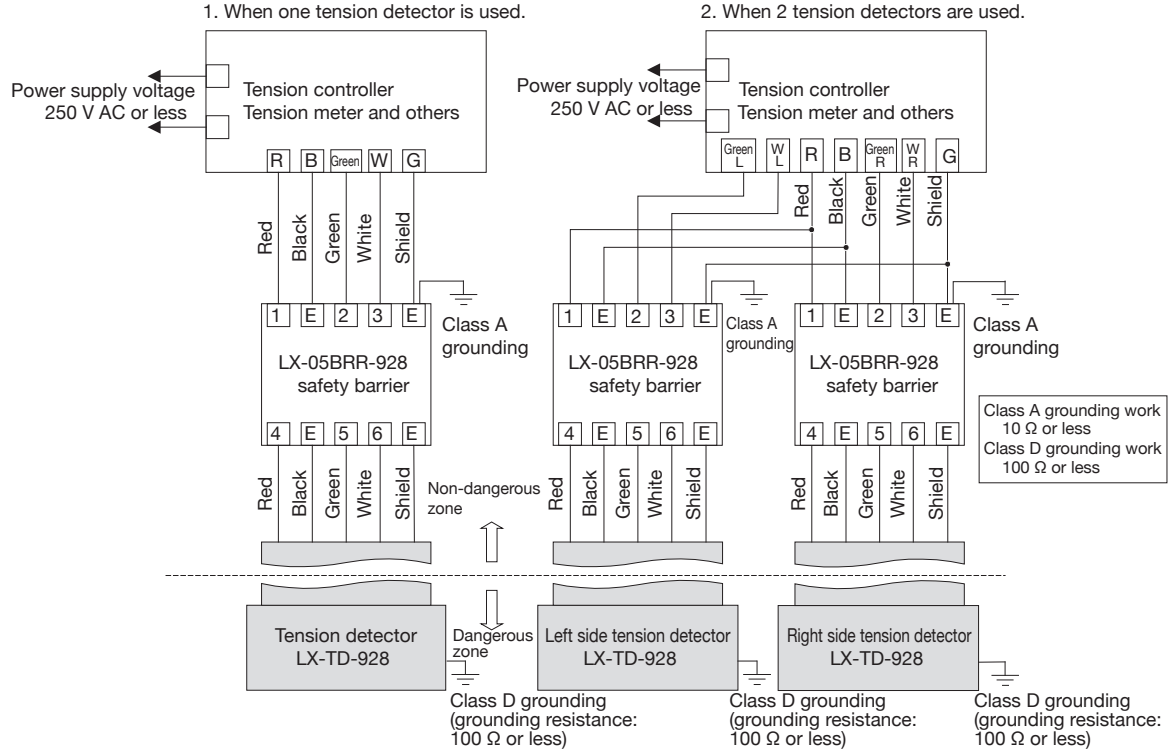

CAUTION

1. Remodeling prohibited. However, the cable can be cut.
2. Install the safety barrier in a non-hazardous area.
3. The safety barrier shall be installed with class A grounding.
4. The supply voltage of the control unit or meter shall not exceed 250 V AC or 250 V DC.
5. This figure shows the wire connection applicable when using the detector in the compression direction.
   When using it in the tensile direction, exchange the green and white wires on the control unit side (for details, refer to the instruction manual of the control unit).
6. The external wiring inductance of the intrinsically safe circuit shall be 1 mH or less and the external wiring capacitance shall be 1 μF or less.
7. If the protection class of IP20 is not satisfied with the external wiring connected to the external wiring connection part of the safety cage, store the safety cage in a container of IP20 or more.
   (The dimension of *1 in the external dimensions of the safety barrier shall be set to 7 mm or more with the terminal attached.)
8. Applicable models are as follows.
   LX-005TD-928, LX-015TD-928, LX-030TD-928, LX-050TD-928, LX-100TD-928, LX-200TD-928
9. The safety barrier is LX-05BRR-928.

● Applicable explosive gas classification

Temperature class		T1	T2	T3	T4	T5
		Over 450°C	Over 300°C to 450°C	Over 200°C to 300°C	Over 135°C to 200°C	
Explosive gas classification	IIA	Acetone Ethyl acetate Benzene Carbon monoxide O-xylene Methanol Propane Toluene	Ethanol Butyl acetate Ethyl benzene 1-Butanol N,N-Dimethylformamide	Hexane Cyclohexane Gasoline	Acetaldehyde Trityl amine	
	IIB		Ethylene		Ethyl methyl ether Diethylether	
	IIC	Hydrogen				Carbon disulfide

The gases shaded by ▒ in the above table are applicable.

Hydrogen of explosive gas classification IIC and carbon disulfide of temperature class T5 or higher are excluded.

LX7-F tension detector

The LX7-F tension detector is a flange mounted type tension detector. This tension detector is used in combination with the tension controller and tension meter to output a voltage proportional to the load applied to the detection roller.

Features

● High-accuracy sensor built in

The sensor part adopts the highly reliable differential transformer type like the stationary mounting type (LX-TD type).

● Thin disc type

The thin shape helps minimize the equipment width. Ease of changing the path line allows the adjacent rollers to be arranged closer, which improves the freedom of layout.

● Nickel plated iron body

The body is made of iron, which is used in many machine frames. Having the same thermal expansion rate as other machine frames helps suppress the effect of changes in ambient temperature. The surface is treated with electroless nickel plating to increase the corrosion resistance.

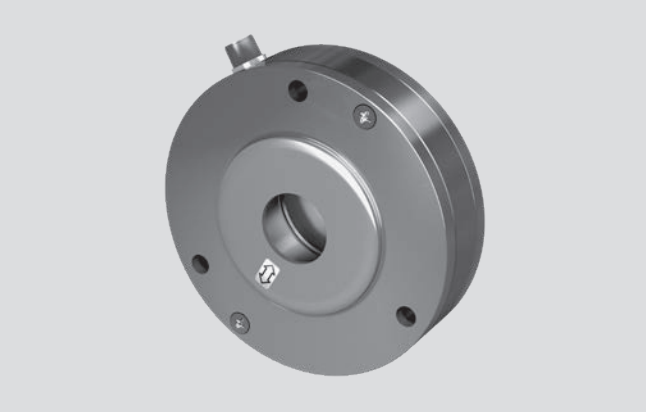

Outline dimensions (mm)

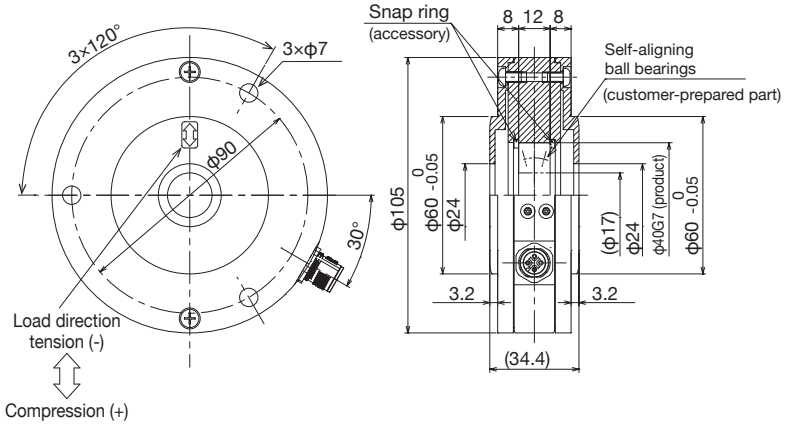

● Accessories

- Snap ring (for hole) Nominal 40 ..... 2 pcs.
- 7-m shielded cable with connector ..... 1 cable
- Seal (for preventing entry of dust, etc.) ... 2 pcs.

● Recommended bearings

Bearings are not enclosed with this product. Prepare the following recommended bearings.

Tension detector Rated load (N)	Compatible reel diameter (mm)	Bearing manufacturer and nominal No.		
		NSK Ltd.	NTN Corporation	Nachi-Fujikoshi Corporation
50/150/300/500	17	1203	1203S	1203

Specifications

Item			Specifications			
Rated load (N)			50	150	300	500
Load direction			Compression (+), tension (-)			
Maximum load withstand level			200% of rated load			
Outline dimensions			Outer diameter ϕ105 × width 34.4 mm			
Input power			5 V DC, 20 mA or less (brown: 5 V DC, black: GND)			
Output voltage			150 ±30 mV DC (when 10 kΩ load resistance is connected)			
Output voltage polarity		During compression load	Blue + White -			
		During tension load	Blue - White +			
Detection accuracy*		Temperature drift	1%/FS or less/20°C			
		Linearity	±1% or less			
		Hysteresis	0.5% or less			
Installation method			wall mounting			
Weight			1.2 kg			
Compatible shaft diameter			17 mm (when inserting bearings)			
Surface treatment (exterior part)			Electroless nickel plating			
Environmental specifications	Operating temperature/ storage temperature		-5 to 60°C (no freezing)			
	Operating humidity/ storage humidity		85% RH or less (no condensation)			
	Vibration resistance		2 m/s^2 or less			
	Impact resistance		98 m/s^2 or less: 3 times each in 3 axial directions			
	Power noise withstand level		Noise voltage 1000 Vp-p, Noise width 1 μs Measured by a noise simulator with frequency range of 30 to 100 Hz			
	Withstand voltage		1000 V AC for 1 min: Measure across all terminals grouped together and the housing.			
	Insulation resistance		100 MΩ or more when measured with 500 V DC insulation resistance tester: Measure across all terminals grouped together and the housing.			
	Operating environment		Environment must be free of corrosive or flammable gases as well as conductive dust, and must have low levels of dust.			

*: The detection accuracy is the accuracy for the isolated tension detector. The detection accuracy for the system will vary according to the machine specifications and installation accuracy, etc.

External connection

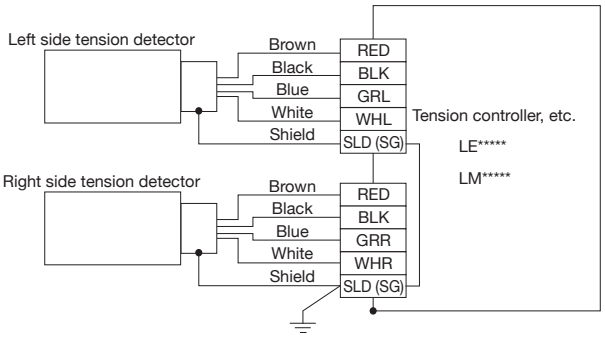

Class D grounding (grounding resistance: 100 Ω or less)

Usage precautions

LX7-F flange-type tension detector is a precision device.
Especially, the sensor part can be damaged by impact or disassembly. Please handle with care.

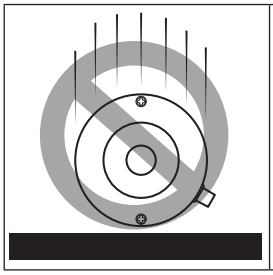

Do not drop the tension detector.

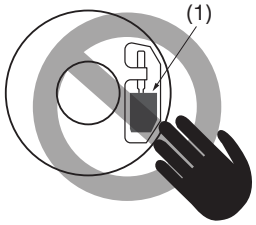

Do not touch or press the sensor part (1).

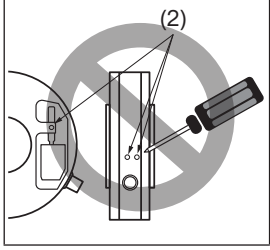

Do not loosen the sensor mounting screw (2).

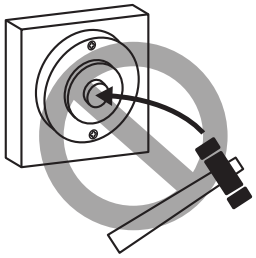

Do not hit the tension detector when installing the tension detector to the device and when
installing bearing/shaft to the tension detector.

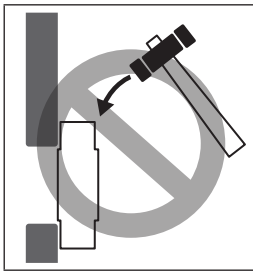

Do not hit the tension detector when performing centering adjustment.

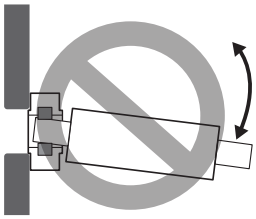

Do not pry the shaft.

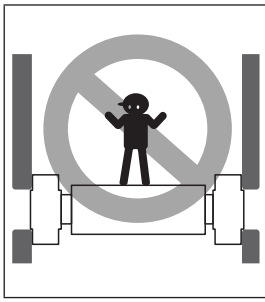

Do not apply a load which exceeds the maximum load (200% of rated load) when installing and
arranging the tension detector.
Do not use the tension detection roller as a foothold while working.

Installing the tension detector

This product is a highly sensitive detector produced with precision machining and assembly technology. Caution is required during assembly and operation.

1. Precautions for installation

1) Always use Self-aligning ball bearings so that unbalance of the tension detection rollers, mechanical machining errors such as uneven sensor mounting face, and changes in the roller length caused by temperature changes are not detected as tension. Keep mechanical machining errors mentioned above as small as possible in order to minimize tension detection errors. ISO 1940-1: 2003(E) G1-G6.3 is recommended for the tension detection roller unbalance. (Follows machine specifications)

2) When supporting the tension detection roller on both ends, align the height of the tension detector installation face.

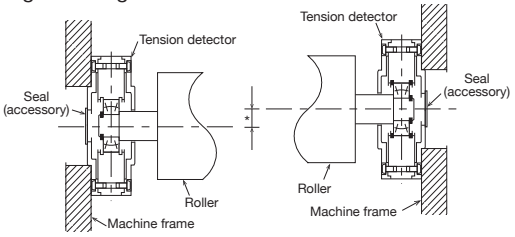

- Keep the * section as low as possible to minimize tension detection error.
- If the * section dimensions are large, there is a risk of the material snaking, the life of the bearings dropping, and the zero point output fluctuating, etc.

3) The tension resultant force according to the material angle must be within the recommended resultant force range indicated in the drawing to maintain the tension detection accuracy.

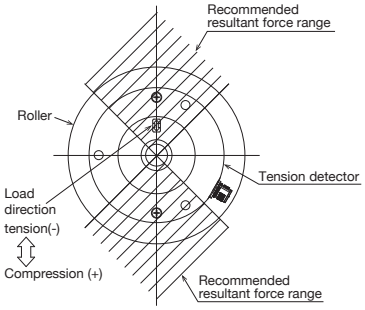

4) When a load is applied on the flange-type tension detector, the roller moves slightly with a circular motion. Adjust the direction of the connectors so that the left and right tension detectors bend in the same direction.

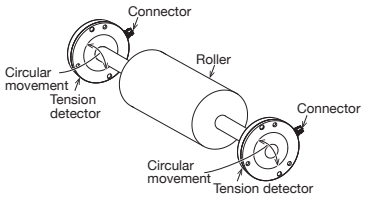

5) When using in an environment with large temperature changes, provide a mechanism to absorb the changes in tension detection rollers from the changes in temperature so that the accuracy of tension detection is not affected.

6) When operating with a low tension, keep the mechanical loss as low as possible in order to minimize the tension control error.

7) The detection roller cannot be installed on only one side.

8) Provide guide rollers on the front and rear of the tension detector so that the material angles θ1 and θ2 do not change.

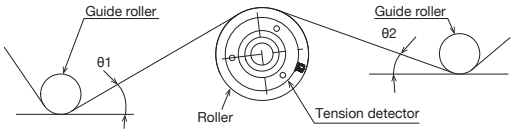

9) When using in places with high levels of dust, etc., insert a V-ring etc., where the shaft enters the product to prevent the entry of dust, etc., into the product.

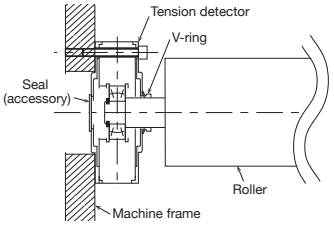

*: V-ring: Size must match user's roller size

2. Installation methods

1) This product has internal self-aligning ball bearings that support the roller shaft.

2) Provide a spigot (ϕ60) on the main unit and socket on the machine frame to position, and then install the product onto the inner side or outer side of the machine frame.

3) Use three M6 bolts (strength class 10.9 or more) to install the product onto the machine frame. (Tightening torque: 9 N•m to 12 N•m)

4) The tightening torque for the cross-recessed screw on the product cover is 1.1 N•m to 1.8 N•m.

2.1 Mounting example (when installing on wall face)

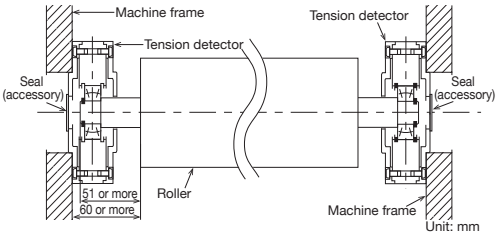

a) Loosen the cross-recessed screw on the product and open the cover (both sides).

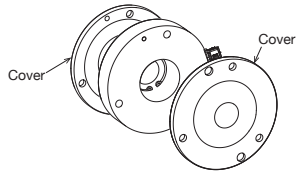

b) Attach a snap ring on the side opposite the machine frame, and tighten the cross-recessed screws to close the cover.

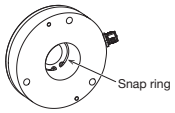

c) Pass the roller through the product.

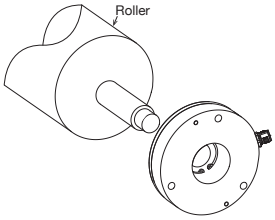

d) Mount the bearings into the roller. (Fix the shaft direction with the snap ring.)

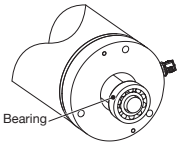

e) Slide the bearings into the product in the direction of the arrow, and attach a snap ring on the opposite side of [b]. Then, tighten the crossrecessed screws to close the cover.

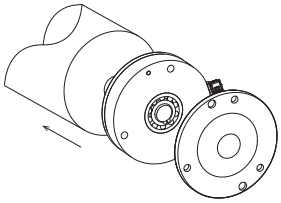

f) On the other piece of the product, slide the bearings into the product in the same way. Note that on this side, a snap ring is not attached. Tighten the cross-recessed screw and close the cover.

g) Slide the product from step [f] in the shaft direction. Make it narrower than the machine frame width and insert it.

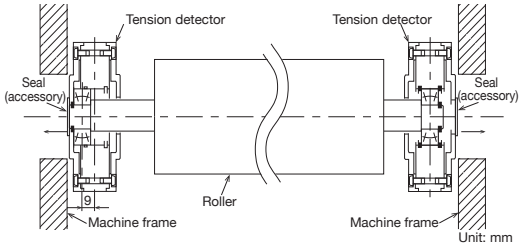

h) When installing, attach the product's spigot (ϕ60) into the socket provided on the machine frame, and install with three M6 bolts.

- Take care to prevent the entry of dust, etc., when the product cover is opened. After installing, plug the cover hole with the enclosed seal.

2.2 Mounting example (when installing on outer side of wall)

a) Loosen the cross-recessed screw on the product and open the cover (both sides).

b) Attach the machine frame side snap ring, and tighten the cross-recessed screws to close the cover.

c) Pass the roller through the product.

d) Mount the bearings into the roller. (Fix the shaft direction with the snap ring, etc.)

e) Slide the bearings into the product, and attach a snap ring on the opposite side of [b]. Then, tighten the cross-recessed screws to close the cover.

f) Set the product spigot (ϕ60) into the socket provided on the machine frame, and tighten with three M6 bolts.

g) Install the other piece of the product with the same procedure.

- Mount the bearings into the roller.
- Insert the product body into the outer ring of the bearings.
- Align the cover with the screw holes on the product unit, set the product spigot (ϕ60) into the socket provided on the machine hole, and install with the three M6 bolts.
- Take care to prevent the entry of dust, etc., when the product cover is opened. After installing, plug the cover hole with the enclosed seal.

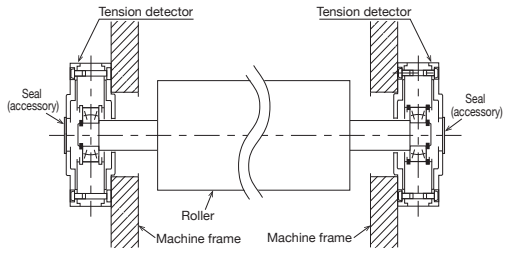

● Selecting a tension detector

Depending on the installation conditions, selection may not be possible. In this case, change the conditions and perform the selection calculation again.

[Sample calculation]

■ Conditions

- Tension F = 100 N
- Roll load W = 5 kg
- Material angle: $\theta_1 = 30°$, $\theta_2 = 60°$
- Detector angle: $\theta_d = 20°$
- Number of detectors: N = 2

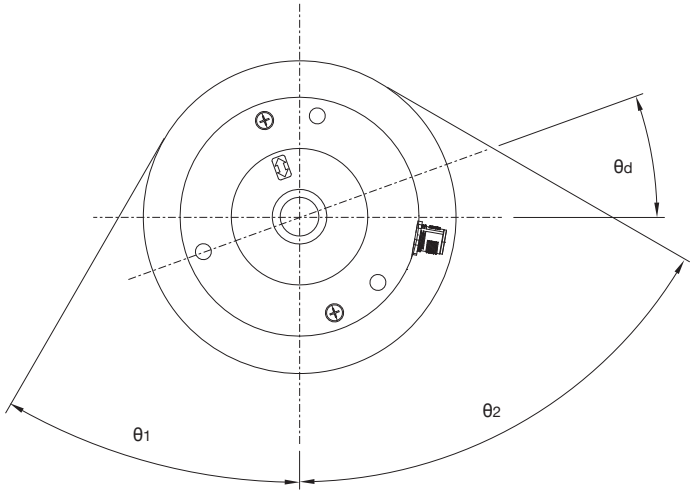

■ Detailed calculation

Temporarily select LX7-150FN meeting Go = 150 N.

(1) Load by tension $GF = (\cos(\theta_1 + \theta_d) + \cos(\theta_2 - \theta_d)) \times F$
$= (\cos(30° + 20°) + \cos(60° - 20°)) \times 100$
$= 140.9$ (N)

(2) Load by roll $GW = \cos(\theta_d) \times W$
$= \cos(20°) \times 5 \times 9.8$
$= 46.0$ (N)

(3) Total load $G = GF + GW$
$= 140.9 + 46.0$
$= 186.9$ (N)

(4) Hinge load $Gh = (\sin(\theta_1 + \theta_d) + \sin(\theta_2 - \theta_d)) \times F + \sin(\theta_d) \times W$
$= (\sin(30° + 20°) + \sin(60° - 20°)) \times 100 + \sin(20°) \times 5 \times 9.8$
$= 157.6$ (N)

(5) Judgment of calculation result

- The ratio of tension load to the rated load is
$\frac{G}{N \times Go} = \frac{140.9}{2 \times 150} = 47.0\% \geqq 20\%$ This is within the span adjustment range.
- The ratio of roll load to the rated load is
$\frac{GW}{N \times Go} = \frac{46.0}{2 \times 150} = 15.3\% \leqq 80\%$ This is within the zero adjustment range.
- The ratio of total load to the rated load is
$\frac{G}{N \times Go} = \frac{186.9}{2 \times 150} = 62.3\% \leqq 80\%$ This is within the allowable load range. (Calculated supposing the tension of the material is 20%)
- The ratio of hinge load to the rated load is
$\frac{Gh}{N \times Go} = \frac{157.6}{2 \times 150} = 52.5\% \leqq 100\%$ This is within the allowable load range.

■ Selection result

Based on the above calculation, the use of 2 LX7-150FN tension detectors is recommended.

Common Item

- Mechanical Load Torque Calculation Method
- How to Determine the Moment of Inertia *J*
- Moment of Inertia *J* Calculation Quick Reference Table
- SI Unit and Non-SI Unit Conversion Table
- Product List

Mechanical Load Torque Calculation Method

In many cases, it is difficult to calculate the net power required to operate a machine due to the setting of load conditions, transmission efficiency, etc. For this reason, it is often determined empirically. However, it is necessary to grasp the load torque to select the electromagnetic clutch, so the general formulas are listed below. Note that there are many uncertainties as described above, so values should also be based on experience.

1. From motor to torque

When the load torque is not clear and only the motor output is known, it depends on the following formula.

$$T_L = 9550 \frac{P}{N} \eta \quad \cdots\cdots (1)$$

where,
T_L: Load torque (N·m)
P: Motor rated output (kW)
N: Clutch shaft rotation speed (r/min)
η: Machine conduction efficiency from motor shaft to clutch shaft

2. Work to move up and down

(Example: Hoisting)

$$T_L = \frac{W \cdot V}{6.3N \cdot \eta} \quad \cdots\cdots (2)$$

where,
T_L: Load torque (N·m)
W: Total weight (N) of vertically moving part
V: Velocity of vertically moving part (m/min)
N: Rotation speed of shaft for obtaining torque (r/min)
η: Efficiency
(Example: Approx. 0.95 per pair of gears, chains, belts etc.)

Note: This formula can also be applied to lathe spindles that do similar work.
In this case W should be cutting resistance (N).

3. Horizontal motion work with friction

(Example: Table feed, for crane run)

$$T_L = \frac{\mu \cdot W \cdot V}{6.3N \cdot \eta} \quad \cdots\cdots (3)$$

where,
μ: Running resistance (friction coefficient)

(Example: Approx. 0.005 for ball bearings
Approx. 0.15 on bed surface *)

W: Total weight of horizontal moving parts (N)
V: Speed (m/min) of horizontal moving parts

Note: * may be even larger depending on the assembling/ finishing condition of the machine.

How to Determine the Moment of Inertia *J*

The moment of inertia *J* (kgm^2) of the rotating body can be obtained by the following equation, where the weight of the rotating body is M (kg) and the unit of length is (m).

1. Rotation body *J*

(1) Solid cylindrical body

$$J = \frac{1}{8} \cdot M \cdot D^2 \quad \cdots\cdots (1)$$

where,
J: Moment of inertia (kgm^2)
M: Weight (kg)
D: Outside diameter of rotating object (m)

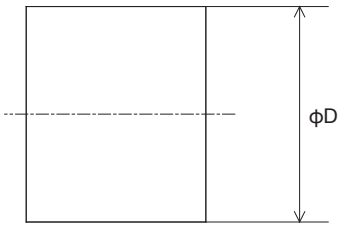

(2) Hollow cylindrical body

$$J = \frac{1}{8} \cdot M \cdot (D^2 + d^2) \quad \cdots\cdots (2)$$

where,
d: Inside diameter of rotating object (m)

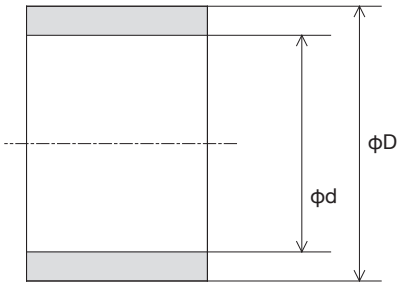

(3) Complicated shape

When the shape is as shown below, divide it into A, B, and C, find *J* of each part, and sum them up. That is,

$$J = J_A + J_B + J_C \quad \cdots\cdots (3)$$

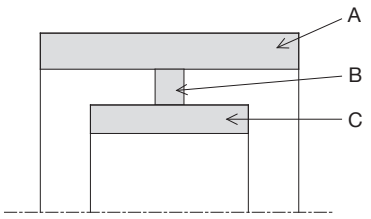

(4) Any axis x' parallel to the center axis x passing through the center of gravity of an object

$$J = J_X + M \cdot R^2 \quad \cdots\cdots (4)$$

where,
J_X: Moment of inertia of object with respect to axis x (kgm^2)
R: Distance between axes x and x' (m)

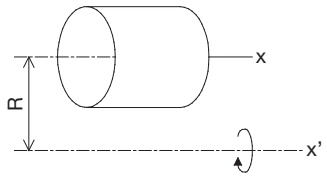

2. *J* for linear motion

(1) General formula

$$J = \frac{M \cdot V^2}{4\pi^2 \cdot N^2} \quad \cdots\cdots (5)$$

where,
M: Weight of linearly moving object (kg)
V: Speed of linearly moving object (m/min)
N: Rotation speed of the rotating shaft for obtaining *J* (r/min)

(2) *J* of various linear motion bodies

(1) When the object moves linearly with a screw [value on screw axis]

$$J = \frac{M}{4}\left(\frac{P}{\pi}\right)^2 \quad \cdots\cdots (6)$$

where,
M: Weight of linearly moving object (kg)

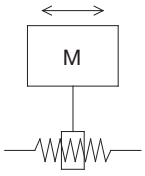

(2) Conveyor [value on Do axis]
(However, J of pulley/belt etc. is not included.)

$$J = \frac{M}{4}Do^2 \quad \cdots\cdots (7)$$

where,
Do: Diameter of pulley or the like (m)

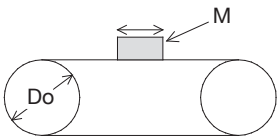

(3) When the weight moves [value on drum axis] by a rope etc. such as a crane/winch, etc.

$$J = \frac{M}{4}Do^2 \quad \cdots\cdots (8)$$

where,
Do: Drum diameter (m)

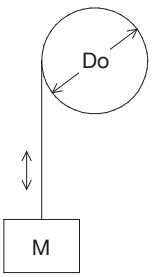

3. Conversion of *J* to clutch shaft

To convert J_B on the N_2 shaft to the clutch shaft value as shown in the following figure, do as shown in the figure below.

$$J_A = \left(\frac{N_2}{N_1}\right)^2 J_B \quad \cdots\cdots (9)$$

where,
J_A: *J* at the clutch shaft (kgm^2)
J_B: *J* on N_2 shaft (load shaft) (kgm^2)
N_1: Rotation speed on the clutch shaft (r/min)
N_2: Rotation speed on the J_B shaft (r/min)

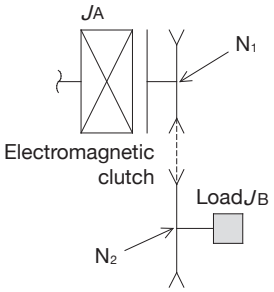

Moment of Inertia *J* Calculation Quick Reference Table

This table shows *J* (kgm^2) per 10 mm length at ϕ10 to ϕ509.

1. Steel with a specific gravity ρ = 7.85 is shown.
2. In case of hollow cylindrical body, subtract *J* of the inside diameter from *J* of the outside diameter.
3. In the case of the following materials, apply the relevant coefficients to this table.
   Casting: × 0.92 Brass: × 1.14 Aluminum: × 0.35
4. How to use the table
   Example:
   The moment of inertia of a solid cylindrical body with a diameter of 352 mm and a thickness of 25 mm is determined from the table.
   Answer:
   From the intersection of row 350 on the left and column 2 at the top, 1.1832×10^{-1} kgm^2 is obtained, which is multiplied by the thickness $\frac{25}{10}$, hence:
   $J = 1.1832 \times 10^{-1} \times \frac{25}{10} = 0.2958$ kgm^2.

Diameter (mm)	*J* (kgm^2)																			
	0		1		2		3		4		5		6		7		8		9	
10	7.7	×10^{-8}	1.13	×10^{-7}	1.6	×10^{-7}	2.2	×10^{-7}	2.96	×10^{-7}	3.9	×10^{-7}	5.05	×10^{-7}	6.44	×10^{-7}	8.09	×10^{-7}	1	×10^{-6}
20	1.23	×10^{-6}	1.5	×10^{-6}	1.81	×10^{-6}	2.16	×10^{-6}	2.56	×10^{-6}	3.01	×10^{-6}	3.52	×10^{-6}	4.1	×10^{-6}	4.74	×10^{-6}	5.45	×10^{-6}
30	6.24	×10^{-6}	7.12	×10^{-6}	8.08	×10^{-6}	9.14	×10^{-6}	1.03	×10^{-5}	1.157	×10^{-5}	1.294	×10^{-5}	1.444	×10^{-5}	1.607	×10^{-5}	1.783	×10^{-5}
40	1.973	×10^{-5}	2.178	×10^{-5}	2.398	×10^{-5}	2.635	×10^{-5}	2.889	×10^{-5}	3.16	×10^{-5}	3.451	×10^{-5}	3.761	×10^{-5}	4.091	×10^{-5}	4.443	×10^{-5}
50	4.817	×10^{-5}	5.214	×10^{-5}	5.635	×10^{-5}	6.081	×10^{-5}	6.553	×10^{-5}	7.052	×10^{-5}	7.579	×10^{-5}	8.135	×10^{-5}	8.721	×10^{-5}	9.339	×10^{-5}
60	9.988	×10^{-5}	1.067	×10^{-4}	1.139	×10^{-4}	1.214	×10^{-4}	1.293	×10^{-4}	1.376	×10^{-4}	1.462	×10^{-4}	1.553	×10^{-4}	1.648	×10^{-4}	1.747	×10^{-4}
70	1.85	×10^{-4}	1.958	×10^{-4}	2.071	×10^{-4}	2.189	×10^{-4}	2.311	×10^{-4}	2.438	×10^{-4}	2.571	×10^{-4}	2.709	×10^{-4}	2.853	×10^{-4}	3.002	×10^{-4}
80	3.157	×10^{-4}	3.317	×10^{-4}	3.484	×10^{-4}	3.657	×10^{-4}	3.837	×10^{-4}	4.023	×10^{-4}	4.216	×10^{-4}	4.415	×10^{-4}	4.622	×10^{-4}	4.835	×10^{-4}
90	5.056	×10^{-4}	5.285	×10^{-4}	5.521	×10^{-4}	5.765	×10^{-4}	6.017	×10^{-4}	6.277	×10^{-4}	6.546	×10^{-4}	6.823	×10^{-4}	7.18	×10^{-4}	7.403	×10^{-4}
100	7.707	×10^{-4}	8.02	×10^{-4}	8.342	×10^{-4}	8.674	×10^{-4}	9.016	×10^{-4}	9.368	×10^{-4}	9.73	×10^{-4}	1.01	×10^{-3}	1.048	×10^{-3}	1.088	×10^{-3}
110	1.128	×10^{-3}	1.17	×10^{-3}	1.213	×10^{-3}	1.257	×10^{-3}	1.302	×10^{-3}	1.348	×10^{-3}	1.395	×10^{-3}	1.444	×10^{-3}	1.494	×10^{-3}	1.545	×10^{-3}
120	1.598	×10^{-3}	1.652	×10^{-3}	1.707	×10^{-3}	1.764	×10^{-3}	1.822	×10^{-3}	1.882	×10^{-3}	1.942	×10^{-3}	2.005	×10^{-3}	2.069	×10^{-3}	2.134	×10^{-3}
130	2.201	×10^{-3}	2.27	×10^{-3}	2.34	×10^{-3}	2.411	×10^{-3}	2.485	×10^{-3}	2.56	×10^{-3}	2.636	×10^{-3}	2.715	×10^{-3}	2.795	×10^{-3}	2.877	×10^{-3}
140	2.961	×10^{-3}	3.046	×10^{-3}	3.133	×10^{-3}	3.223	×10^{-3}	3.314	×10^{-3}	3.407	×10^{-3}	3.502	×10^{-3}	3.599	×10^{-3}	3.698	×10^{-3}	3.799	×10^{-3}
150	3.902	×10^{-3}	4.007	×10^{-3}	4.114	×10^{-3}	4.223	×10^{-3}	4.335	×10^{-3}	4.448	×10^{-3}	4.564	×10^{-3}	4.682	×10^{-3}	4.803	×10^{-3}	4.926	×10^{-3}
160	5.051	×10^{-3}	5.178	×10^{-3}	5.308	×10^{-3}	5.44	×10^{-3}	5.575	×10^{-3}	5.712	×10^{-3}	5.852	×10^{-3}	5.994	×10^{-3}	6.139	×10^{-3}	6.287	×10^{-3}
170	6.437	×10^{-3}	6.59	×10^{-3}	6.745	×10^{-3}	6.903	×10^{-3}	7.064	×10^{-3}	7.228	×10^{-3}	7.395	×10^{-3}	7.564	×10^{-3}	7.737	×10^{-3}	7.912	×10^{-3}
180	8.09	×10^{-3}	8.272	×10^{-3}	8.456	×10^{-3}	8.643	×10^{-3}	8.834	×10^{-3}	9.027	×10^{-3}	9.224	×10^{-3}	9.424	×10^{-3}	9.627	×10^{-3}	9.834	×10^{-3}
190	1.004	×10^{-2}	1.026	×10^{-2}	1.047	×10^{-2}	1.069	×10^{-2}	1.092	×10^{-2}	1.114	×10^{-2}	1.137	×10^{-2}	1.161	×10^{-2}	1.184	×10^{-2}	1.209	×10^{-2}
200	1.233	×10^{-2}	1.258	×10^{-2}	1.283	×10^{-2}	1.309	×10^{-2}	1.335	×10^{-2}	1.361	×10^{-2}	1.388	×10^{-2}	1.415	×10^{-2}	1.443	×10^{-2}	1.47	×10^{-2}
210	1.499	×10^{-2}	1.528	×10^{-2}	1.557	×10^{-2}	1.586	×10^{-2}	1.616	×10^{-2}	1.647	×10^{-2}	1.678	×10^{-2}	1.709	×10^{-2}	1.741	×10^{-2}	1.773	×10^{-2}
220	1.805	×10^{-2}	1.838	×10^{-2}	1.872	×10^{-2}	1.906	×10^{-2}	1.94	×10^{-2}	1.975	×10^{-2}	2.011	×10^{-2}	2.046	×10^{-2}	2.083	×10^{-2}	2.119	×10^{-2}
230	2.157	×10^{-2}	2.194	×10^{-2}	2.233	×10^{-2}	2.271	×10^{-2}	2.311	×10^{-2}	2.35	×10^{-2}	2.391	×10^{-2}	2.431	×10^{-2}	2.473	×10^{-2}	2.515	×10^{-2}
240	2.557	×10^{-2}	2.6	×10^{-2}	2.643	×10^{-2}	2.687	×10^{-2}	2.732	×10^{-2}	2.777	×10^{-2}	2.822	×10^{-2}	2.869	×10^{-2}	2.915	×10^{-2}	2.963	×10^{-2}
250	3.01	×10^{-2}	3.059	×10^{-2}	3.108	×10^{-2}	3.158	×10^{-2}	3.208	×10^{-2}	3.259	×10^{-2}	3.31	×10^{-2}	3.362	×10^{-2}	3.415	×10^{-2}	3.468	×10^{-2}
260	3.522	×10^{-2}	3.576	×10^{-2}	3.631	×10^{-2}	3.687	×10^{-2}	3.744	×10^{-2}	3.801	×10^{-2}	3.858	×10^{-2}	3.917	×10^{-2}	3.976	×10^{-2}	4.035	×10^{-2}
270	4.096	×10^{-2}	4.157	×10^{-2}	4.218	×10^{-2}	4.281	×10^{-2}	4.344	×10^{-2}	4.408	×10^{-2}	4.472	×10^{-2}	4.537	×10^{-2}	4.603	×10^{-2}	4.67	×10^{-2}
280	4.737	×10^{-2}	4.805	×10^{-2}	4.874	×10^{-2}	4.943	×10^{-2}	5.014	×10^{-2}	5.084	×10^{-2}	5.156	×10^{-2}	5.299	×10^{-2}	5.302	×10^{-2}	5.376	×10^{-2}
290	5.451	×10^{-2}	5.526	×10^{-2}	5.603	×10^{-2}	5.68	×10^{-2}	5.758	×10^{-2}	5.837	×10^{-2}	5.916	×10^{-2}	5.996	×10^{-2}	6.078	×10^{-2}	6.16	×10^{-2}
300	6.242	×10^{-2}	6.326	×10^{-2}	6.411	×10^{-2}	6.496	×10^{-2}	6.582	×10^{-2}	6.669	×10^{-2}	6.757	×10^{-2}	6.846	×10^{-2}	6.935	×10^{-2}	7.026	×10^{-2}
310	7.117	×10^{-2}	7.21	×10^{-2}	7.303	×10^{-2}	7.397	×10^{-2}	7.492	×10^{-2}	7.588	×10^{-2}	7.685	×10^{-2}	7.782	×10^{-2}	7.881	×10^{-2}	7.981	×10^{-2}
320	8.081	×10^{-2}	8.183	×10^{-2}	8.285	×10^{-2}	8.388	×10^{-2}	8.493	×10^{-2}	8.598	×10^{-2}	8.704	×10^{-2}	8.812	×10^{-2}	8.92	×10^{-2}	9.029	×10^{-2}
330	9.14	×10^{-2}	9.251	×10^{-2}	9.363	×10^{-2}	9.476	×10^{-2}	9.591	×10^{-2}	9.706	×10^{-2}	9.823	×10^{-2}	9.94	×10^{-2}	1.0059	×10^{-1}	1.0178	×10^{-1}
340	1.0299	×10^{-1}	1.0421	×10^{-1}	1.0543	×10^{-1}	1.0667	×10^{-1}	1.0792	×10^{-1}	1.0918	×10^{-1}	1.1045	×10^{-1}	1.1174	×10^{-1}	1.1303	×10^{-1}	1.1433	×10^{-1}
350	1.1565	×10^{-1}	1.1698	×10^{-1}	1.1832	×10^{-1}	1.1967	×10^{-1}	1.2103	×10^{-1}	1.224	×10^{-1}	1.2379	×10^{-1}	1.2581	×10^{-1}	1.2659	×10^{-1}	1.2801	×10^{-1}
360	1.2944	×10^{-1}	1.3089	×10^{-1}	1.3234	×10^{-1}	1.3381	×10^{-1}	1.3529	×10^{-1}	1.3679	×10^{-1}	1.3829	×10^{-1}	1.3981	×10^{-1}	1.4134	×10^{-1}	1.4288	×10^{-1}
370	1.4444	×10^{-1}	1.4601	×10^{-1}	1.4759	×10^{-1}	1.4918	×10^{-1}	1.5079	×10^{-1}	1.524	×10^{-1}	1.5404	×10^{-1}	1.5568	×10^{-1}	1.5734	×10^{-1}	1.5901	×10^{-1}
380	1.607	×10^{-1}	1.6239	×10^{-1}	1.6411	×10^{-1}	1.6583	×10^{-1}	1.6757	×10^{-1}	1.6933	×10^{-1}	1.7109	×10^{-1}	1.7287	×10^{-1}	1.7466	×10^{-1}	1.7647	×10^{-1}
390	1.7829	×10^{-1}	1.8013	×10^{-1}	1.8198	×10^{-1}	1.8384	×10^{-1}	1.8572	×10^{-1}	1.8761	×10^{-1}	1.8952	×10^{-1}	1.9144	×10^{-1}	1.9338	×10^{-1}	1.9533	×10^{-1}
400	1.9729	×10^{-1}	1.9927	×10^{-1}	2.0127	×10^{-1}	2.0328	×10^{-1}	2.053	×10^{-1}	2.0734	×10^{-1}	2.094	×10^{-1}	2.1147	×10^{-1}	2.1356	×10^{-1}	2.1566	×10^{-1}
410	2.1777	×10^{-1}	2.1991	×10^{-1}	2.2205	×10^{-1}	2.2422	×10^{-1}	2.264	×10^{-1}	2.2859	×10^{-1}	2.308	×10^{-1}	2.3303	×10^{-1}	2.3528	×10^{-1}	2.3753	×10^{-1}
420	2.3981	×10^{-1}	2.421	×10^{-1}	2.4441	×10^{-1}	2.4674	×10^{-1}	2.4908	×10^{-1}	2.5144	×10^{-1}	2.5381	×10^{-1}	2.562	×10^{-1}	2.5861	×10^{-1}	2.6104	×10^{-1}
430	2.6348	×10^{-1}	2.6594	×10^{-1}	2.6841	×10^{-1}	2.7091	×10^{-1}	2.7342	×10^{-1}	2.7595	×10^{-1}	2.7849	×10^{-1}	2.8106	×10^{-1}	2.8364	×10^{-1}	2.8624	×10^{-1}
440	2.8886	×10^{-1}	2.9149	×10^{-1}	2.9414	×10^{-1}	2.9681	×10^{-1}	2.995	×10^{-1}	3.0221	×10^{-1}	3.0494	×10^{-1}	3.0768	×10^{-1}	3.1044	×10^{-1}	3.1322	×10^{-1}
450	3.1602	×10^{-1}	3.1884	×10^{-1}	3.2168	×10^{-1}	3.2454	×10^{-1}	3.2741	×10^{-1}	3.3031	×10^{-1}	3.3322	×10^{-1}	3.3615	×10^{-1}	3.391	×10^{-1}	3.4208	×10^{-1}
460	3.4507	×10^{-1}	3.4808	×10^{-1}	3.5111	×10^{-1}	3.5416	×10^{-1}	3.5723	×10^{-1}	3.6032	×10^{-1}	3.6342	×10^{-1}	3.6655	×10^{-1}	3.697	×10^{-1}	3.7287	×10^{-1}
470	3.7606	×10^{-1}	3.7927	×10^{-1}	3.8251	×10^{-1}	3.8576	×10^{-1}	3.8903	×10^{-1}	3.9232	×10^{-1}	3.9564	×10^{-1}	3.9897	×10^{-1}	4.0233	×10^{-1}	4.0571	×10^{-1}
480	4.0911	×10^{-1}	4.1253	×10^{-1}	4.1597	×10^{-1}	4.1943	×10^{-1}	4.2291	×10^{-1}	4.2642	×10^{-1}	4.2995	×10^{-1}	4.335	×10^{-1}	4.3707	×10^{-1}	4.4066	×10^{-1}
490	4.4428	×10^{-1}	4.4792	×10^{-1}	4.5158	×10^{-1}	4.5526	×10^{-1}	4.5886	×10^{-1}	4.6269	×10^{-1}	4.6644	×10^{-1}	4.7021	×10^{-1}	4.7401	×10^{-1}	4.7783	×10^{-1}
500	4.8167	×10^{-1}	4.8554	×10^{-1}	4.8942	×10^{-1}	4.9334	×10^{-1}	4.9727	×10^{-1}	5.0123	×10^{-1}	5.0521	×10^{-1}	5.0922	×10^{-1}	5.1325	×10^{-1}	5.173	×10^{-1}

How to calculate *J*

Steel: $J = D4 \times L \times 775$ [kgm^2] Aluminum: $J = D4 \times L \times 270$ [kgm^2]

Brass: $J = D4 \times L \times 880$ [kgm^2] where, D: diameter (m), L: length (m)

SI Unit and Non-SI Unit Conversion Table

The transition to SI units has been carried out since October 1, 1999, but some terms still require conversion. The following reference table shows conversion factors related to clutches and brakes.

Physical quantity	Non-SI unit (symbol)	SI unit (symbol)	Conversion relation
Length	Micron (μ)	Meter (m)	1 μ = 1 μm
Frequency	Cycle (c) Cycle per second (c/s)	Hertz (Hz)	1c = 1 c/s = 1 Hz
Magnetic field strength	Amperage per meter (AT/m) Oersted (Oe)	Ampere meter (A/m)	1 AT/m = 1 A/m 10e ≒ 79 A/m
Magnetomotive force	Ampere-turn (AT)	Ampere (A)	1 AT = 1 A
Magnetic flux density	Gamma (γ) Gauss (G)	Tesla (T)	1 γ = 1 nT 1 G = 100 μT
Magnetic flux density	Maxwell (Mx)	Weaver (Wb)	1 Mx = 10 nWb
Sound pressure level	Phone	Decibel (dB)	1 phone = 1 dB
Force (load and tension)	Weight kg (kgf) Weight gram (gf) Weight ton (tf)	Newton (N)	1 kgf ≒ 9.8 N 1 gf ≒ 9.8 mN 1 tf ≒ 9.8 kN
Moment of force (torque)	Weight kilogram meter (kgf·m)	Newton meter (N·m)	1 kgf·m ≒ 9.8 N·m
Pressure	Weight kilogram per square meter (kgf/m^2)	Pascal (Pa)	1 kgf/m^2 ≒ 9.8 Pa
Stress	Weight kilogram per square meter (kgf/m^2)	Pascal (Pa)	1 kgf/m^2 ≒ 9.8 Pa
Work (energy)	Weight kilogram meter (kgf/m)	Joule (J)	1 kgf·m ≒ 9.8 J
Rate	Weight kilogram meter per second (kgf/m/s)	Watt (W)	1 kgf·m/s ≒ 9.8 W
Calorie	Calorie (cal)	Joule (J)	1 cal ≒ 4.2 J
Rotation	Rotation speed (rpm)	Rotation speed (r/min)	1 rpm = 1 r/min
Time	Second (sec) Minute (min) (reference) Hour (Hr) (reference)	Second (s) Minute (min) Hour (h)	1 sec = 1 s 1 min = 1 min 1 Hr = 1 h
Moment of inertia	GD^2 ($kgfm^2$)	Moment of inertia (kgm^2)	1 $kgfm^2$ ≒ 0.25 kgm^2
Temperature	Degree (°C)	Celsius degree (°C)	1°C = 1°C
Temperature difference	Degree (deg)	Celsius degree (°C)	1 deg = 1°C
Weight	Weight kg (kgf)	Kilogram (kg)	1 kgf = 1 kg

For details other than the above, refer to ISO 1000.

Product List (clutch/brake)

Type			Model name	Page
Powder clutch	Protruding shaft	Natural cooling type	ZKG-5AN	A-10
			ZKG-10AN	
			ZKG-20AN	
			ZKG-50AN	
			ZKG-100AN	
			ZKB-0.06AN	A-12
			ZKB-0.3AN	
			ZKB-0.6AN	
		Natural cooling type (Forced air cooling)	ZKB-1.2BN	A-14
			ZKB-2.5BN	
			ZKB-5BN	
			ZKB-10BN	A-16
			ZKB-20BN	
			ZKB-40BN	
		Explosion-proof natural cooling type	ZKB-1.2B4-909	A-18
			ZKB-5B4-909	
			ZKB-10B2-909	
			ZKB-20B2-909	
	Through-shaft	Natural cooling type	ZA-0.6A1	A-20
			ZA-1.2A1	
			ZA-2.5A1	
			ZA-5A1	
			ZA-10A1	
			ZA-20A1	

Type			Model name	Page
Powder brake	Protruding shaft	Natural cooling type	ZKG-5YN	A-22
			ZKG-10YN	
			ZKG-20YN	
			ZKG-50YN	
			ZKB-0.06YN	A-24
			ZKB-0.3YN	
			ZKB-0.6YN	
		Natural cooling type (Forced air cooling)	ZKB-1.2XN	A-26
			ZKB-2.5XN	
			ZKB-5XN	
			ZKB-10XN	A-28
			ZKB-20XN	
			ZKB-40XN	
		Thermoblock cooling	ZKB-2.5HBN	A-30
			ZKB-5HBN	
			ZKB-10HBN	
			ZKB-20HBN	
			ZKB-40HBN	
		Water cooling type	ZKB-2.5WN	A-32
			ZKB-5WN	
			ZKB-10WN	A-34
			ZKB-20WN	
			ZKB-40WN	
	Through-shaft	Natural cooling type	ZA-0.6Y	A-36
			ZA-1.2Y1	
			ZA-2.5Y1	
			ZA-5Y1	
			ZA-10Y1	A-38
			ZA-20Y1	
			ZA-40Y	
		Natural cooling type Thin type	ZX-0.3YN-24	A-40
			ZX-0.6YN-24	
			ZX-1.2YN-24	

Product List (tension controller)

Type			Model name		Page
Feedback tension controller			LE7-40GU-L	0 to 24 V DC for control, Rated: 2.7 A constant voltage/constant current control switchable	B-4
			LE-10WTA-CCL	24 V DC tension controller (1 LM-10WA-TAD tension detector input adapter included)	B-16
			LE-30CTN	24 V DC, 3 A built-in clutch amplifier, Kanji display type	B-21
			LE-40MTA	24 V DC, 4 A built-in clutch amplifier, built-in auxiliary power supply, standard type	B-28
			LE-40MTB	24 V DC, 4 A built-in clutch amplifier, built-in auxiliary power supply, high-function type	
			LE-40MTA-E	LE-40MTA panel surface/LCD English display type	
			LE-40MTB-E	LE-40MTB panel surface/LCD English display type	
			LE-60EC	Extension cable for LE-40MTB (MTB-E) (for CC-Link extension block)	
			LE-40MD	Reel diameter calculation unit (used in combination with LE-40MTB/LE-40MTB-E)	B-37
Open-loop type tension controller			LD-10WTB-CCL	24 V DC tension controller (1 reel diameter calculation adapter LD-10WTB-DCA included)	B-16
			LD-30FTA	24 V DC, 3 A integrated thickness type	B-40
			LD-05TL	24 V DC, 0.5 A touch lever (potentiometer) type	B-46
Clutch amplifier			LD-40PSU	24 V DC, 3.8 A power supply unit	B-50
			LD-10PAU-A	24 V DC, 1.0 A power amplifier	B-54
			LD-10PAU-B	24 V DC, 1.0 A power amplifier (with RS-485 inter-station communication function)	
			LE-50PAU	24 V DC, 4 A power amplifier	B-48
Tension Meter			LM-10WA-CCL	Tension Meter	B-56
			LM-10PD	Tension Meter	B-61
			LM-10TA	Tension amplifier	B-63
Tension detector and explosion-proof safety barrier	Standard	Stationary type	LX-005TD	Rated load 50 N	B-65
			LX-015TD	Rated load 150 N	
			LX-030TD	Rated load 300 N	
			LX-050TD	Rated load 500 N	
			LX-100TD	Rated load 1000 N	
			LX-200TD	Rated load 2000 N	
		Flange type	LX7-50FN17	Rated load 50 N	B-71
			LX7-150FN17	Rated load 150 N	
			LX7-300FN17	Rated load 300 N	
			LX7-500FN17	Rated load 500 N	
	Explosion-proof	Stationary type	LX-005TD-928	Rated load 50 N	B-65
			LX-015TD-928	Rated load 150 N	
			LX-030TD-928	Rated load 300 N	
			LX-050TD-928	Rated load 500 N	
			LX-100TD-928	Rated load 1000 N	
			LX-200TD-928	Rated load 2000 N	
			LX-05BRR-928	Safety barrier: One required for each detector	B-69
Option			LE7-DCA	Reel diameter calculation option	B-9
			LE7-CCL	Network option	B-13
			LE7-ATT	Attachment	B-15
			LM-10WA-TAD	Tension detector input adapter	B-18, 61
			LD-10WTB-DCA	Reel diameter calculation adapter	B-18
			LM-10WA-USB	USB interface	B-18
			LM-10WA-485	RS-485 communication interface	B-18
			LD-30FTA-1AD	Analog input option board for LD-30FTA	B-41
			LD-8EEPROM	EEPROM cassette (8 k bytes)	B-53
			LD-10PAU-CAB1M	Digital input cable (1 m) for LD-10PAU-□	–
			LX-030PLT	For LX-005TD, 015TD, 030TD, and 050TD	B-65
			LX-100PLT	For LX-100TD and 200TD	

Safety precautions

(Please read before considering installation.)

Safety Guidelines

- Before using our products, please read this catalog and instruction manual carefully, pay sufficient attention to safety, and use the products properly.
- These products are manufactured as general-purpose products for general industry. They are not designed or manufactured for use with equipment or systems that may affect human life.
- If you are considering using these products for nuclear power, power generation, aerospace, medical, or passenger vehicle equipment or systems, consult our sales department.
- Although the products shown in this catalog are manufactured under strict quality control, please make sure to incorporate a systematic backup and fail safe function when installing the products in a facility where failure of a product may cause a serious accident or loss.

The safety precautions are classified into [⚠ WARNING] and [⚠ CAUTION] in this catalog. The meaning and symbols for each classification are as follows.

⚠ WARNING	If not operated properly, it may lead to a dangerous situation and cause death or serious injury.
⚠ CAUTION	If not operated properly, it may lead to a dangerous situation and cause a moderate or minor injury. Alternatively, it may cause damage to property.

Precautions for clutches/brakes in general

⚠ WARNING Install a protective cover.

If a rotating object is exposed to the outside, a dangerous situation could occur if a part of the human body such as a hand, finger, etc. comes in contact. Install a protective cover with sufficient ventilation to prevent contact with the human body. In addition, make sure to provide a safety mechanism which immediately stops the rotating object when the cover is opened.

⚠ WARNING Make sure to operate the products within the allowable heat capacity.

If operated exceeding the allowable heat capacity, the working surfaces may become red-hot due to excessive heat buildup and cause a fire. In addition, the products may not perform as designed. Make sure to operate the products within the allowable heat capacity.

⚠ WARNING Do not operate the products exceeding the allowable rotation speed.

If operated exceeding the allowable rotation speed, the products may break and be scattered due to excessive vibration. Make sure to operate the products within the allowable rotation speed and install a protective cover.

⚠ WARNING Upon breaking the DC current, make sure to install a surge absorber in parallel with the clutch/brake coil.

Breaking the DC current may generate a massive surge voltage and adversely affect peripheral equipment. Use a surge absorber (diode, varistor, protective resistor, and so on).

⚠ WARNING When designing the system, make sure to specify electrical wire of a suitable size for the specified current capacity.

Make sure to use electrical wire of a suitable size for the specified current capacity. If the electrical wire is not thick enough, the insulator may melt and cause an insulation failure. The failure may cause an electric shock, electric leakage, or fire.

⚠ WARNING Check the surrounding environment.

Do not operate the products in an environment exposed to dust, high temperature, condensation, wind, and rain. Additionally, do not mount the products in a location where vibration or shock is directly applied. Otherwise, it may lead to damage, malfunction, and insufficient performance of the products.

⚠ WARNING Make sure not to operate the products in an atmosphere where an ignition and/or explosion may occur.

Slipping may cause sparks at the working surfaces in the products. Do not operate the products in an atmosphere containing oils, fats, or flammable gas which may cause an ignition and/or explosion. In addition, make sure to enclose the main unit of the products at a location where there are flammable materials such as cotton. Note that enclosing the main unit lowers the allowable heat dissipation of the product. (Please consider using a pressure-resistant explosion-proof powder clutch.)

⚠ WARNING When designing the system, make sure to avoid the infiltration of water, oils, and fats.

If the products are exposed to water, oils, and fats, such contaminants will eventually reach the working surfaces and significantly lower the torque. This may cause the machine to run by inertia or go out of control, which may lead to an accidental injury.

⚠ WARNING Make sure to operate the products within the rated torque.

If operated exceeding the rated torque, it may cause loss of efficiency and mechanical damage leading to injury. Make sure to operate the products within the rated torque.

⚠ WARNING Make sure to use bolts having the specified strength and to install devices to securely prevent looseness.

The bolts, depending on the strength, may be sheared and damaged, which may lead to injury. Use bolts that satisfy the requirements stipulated in Strength Classification II 7T of JIS B 1051 or better and prevent looseness by using an adhesive, spring washers, etc.

Precautions for tension controllers in general

⚠ WARNING Make sure to construct an emergency stop circuit externally isolated from the tension controllers.

Make sure to construct an emergency stop circuit for the machine externally isolated from the products. Otherwise, the machine may go out of control and cause an accident when a malfunction occurs.

⚠ WARNING Provide class D grounding (100 Ω or less).

Make sure to provide the grounding terminal and sheet metal body of the products with class D grounding (100 Ω or less) using electrical wires with a thickness of 2 mm^2 or more. Failure to do so may cause electric shock.

* Provide class A grounding (10 Ω or less) for the safety barrier.

⚠ WARNING Do not operate the switches and keys with wet hands.

Do not operate the switches and keys with wet hands. Doing so may cause an electric shock.

⚠ WARNING Make sure not to operate the products in an atmosphere where an ignition and/or explosion may occur.

Doing so may cause a fire and/or explosion.

⚠ WARNING Do not modify or disassemble.

Do not modify or disassemble. It may cause a malfunction and accidents such as fire, injury, etc.

⚠ CAUTION Make sure to isolate the strong current system wiring and weak current system wiring from each other.

Make sure to isolate the strong current system wiring and weak current system wiring from each other and do not provide any common grounding. Otherwise, electric noise accumulated on the weak current system wiring may cause a malfunction.

⚠ WARNING When designing the system, make sure to specify electrical wire of a suitable size for the specified current capacity.

Make sure to use electrical wire of a suitable size for the specified current capacity. If the electrical wire is not thick enough, the insulator may melt and cause an insulation failure. The failure may cause an electric shock, electric leakage, or fire.

⚠ CAUTION Check the surrounding environment.

Do not mount the products in an environment or location exposed to dust, oil mist, conductive dust, corrosive gas, high temperature, condensation, wind, and rain. Additionally, do not mount the products in a location where vibration or shock is directly applied. Otherwise, it may lead to damage, malfunction, and deterioration of the products.

Notes

- We shall not be held responsible for any damages and losses caused by repair, disassembly, or modification performed by a third party other than Mitsubishi Electric Corporation or those appointed by Mitsubishi Electric Corporation.
- The safety precautions and specifications shown in this catalog are subject to change without prior notice.

Trademarks and Registered Trademarks

- Microsoft, Microsoft Access, Excel, SQL Server, Visual Basic, Visual C++, Visual Studio, Windows, Windows NT, Windows Server, Windows Vista, and Windows XP are either registered trademarks or trademarks of Microsoft Corporation in the United States and/or other countries.
- Ethernet is a registered trademark of Fuji Xerox Co., Ltd. in Japan.
- The company names, system names and product names mentioned in this document are either registered trademarks or trademarks of their respective companies.
- In some cases, trademark symbols such as '™' or '®' are not specified in this document.

YOUR SOLUTION PARTNER

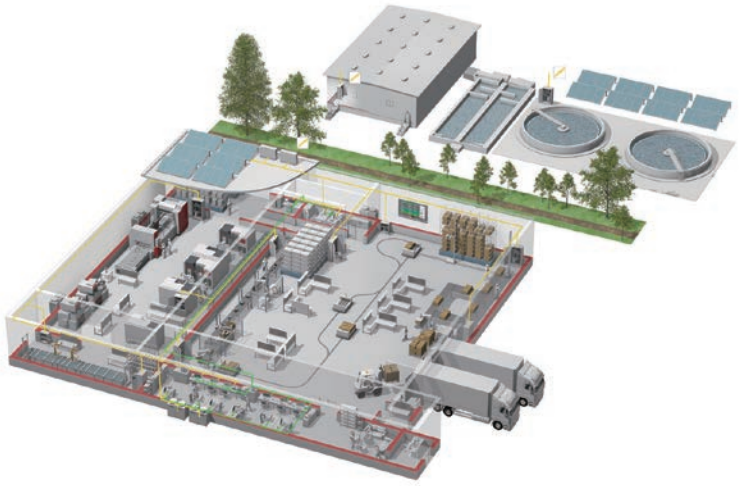

Mitsubishi Electric offers a wide range of automation equipment from PLCs and HMIs to CNC and EDM machines.

A NAME TO TRUST

Since its beginnings in 1870, some 45 companies use the Mitsubishi name, covering a spectrum of finance, commerce and industry.

The Mitsubishi brand name is recognized around the world as a symbol of premium quality.

Mitsubishi Electric Corporation is active in space development, transportation, semi-conductors, energy systems, communications and information processing, audio visual equipment and home electronics, building and energy management and automation systems, and has 237 factories and laboratories worldwide in over 121 countries.

This is why you can rely on Mitsubishi Electric automation solution - because we know first hand about the need for reliable, efficient, easy-to-use automation and control in our own factories.

As one of the world's leading companies with a global turnover of over 4 trillion Yen (over $40 billion), employing over 100,000 people, Mitsubishi Electric has the resource and the commitment to deliver the ultimate in service and support as well as the best products.

Low voltage: MCCB, MCB, ACB

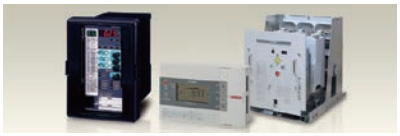

Medium voltage: VCB, VCC

Power monitoring, energy management

Compact and Modular Controllers

Inverters, Servos and Motors

Visualisation: HMIs

Numerical Control (NC)

Robots: SCARA, Articulated arm

Processing machines: EDM, Lasers, IDS

Transformers, Air conditioning, Photovoltaic systems

* Not all products are available in all countries.

ELECTROMAGNETIC CLUTCH/BRAKE

TENSION CONTROLLER

MITSUBISHI ELECTRIC CORPORATION

HEAD OFFICE: TOKYO BLDG., 2-7-3, MARUNOUCHI, CHIYODA-KU, TOKYO 100-8310, JAPAN

http://Global.MitsubishiElectric.com

L(NA)17025ENG-B 1908(MEE)

Printed August 2019

All trademarks acknowledged.