for a greener tomorrow

MITSUBISHI ELECTRIC

Changes for the Better

FACTORY AUTOMATION

ELECTROMAGNETIC CLUTCHES AND BRAKES
TENSION CONTROLLER

Tension Control Complete Guide

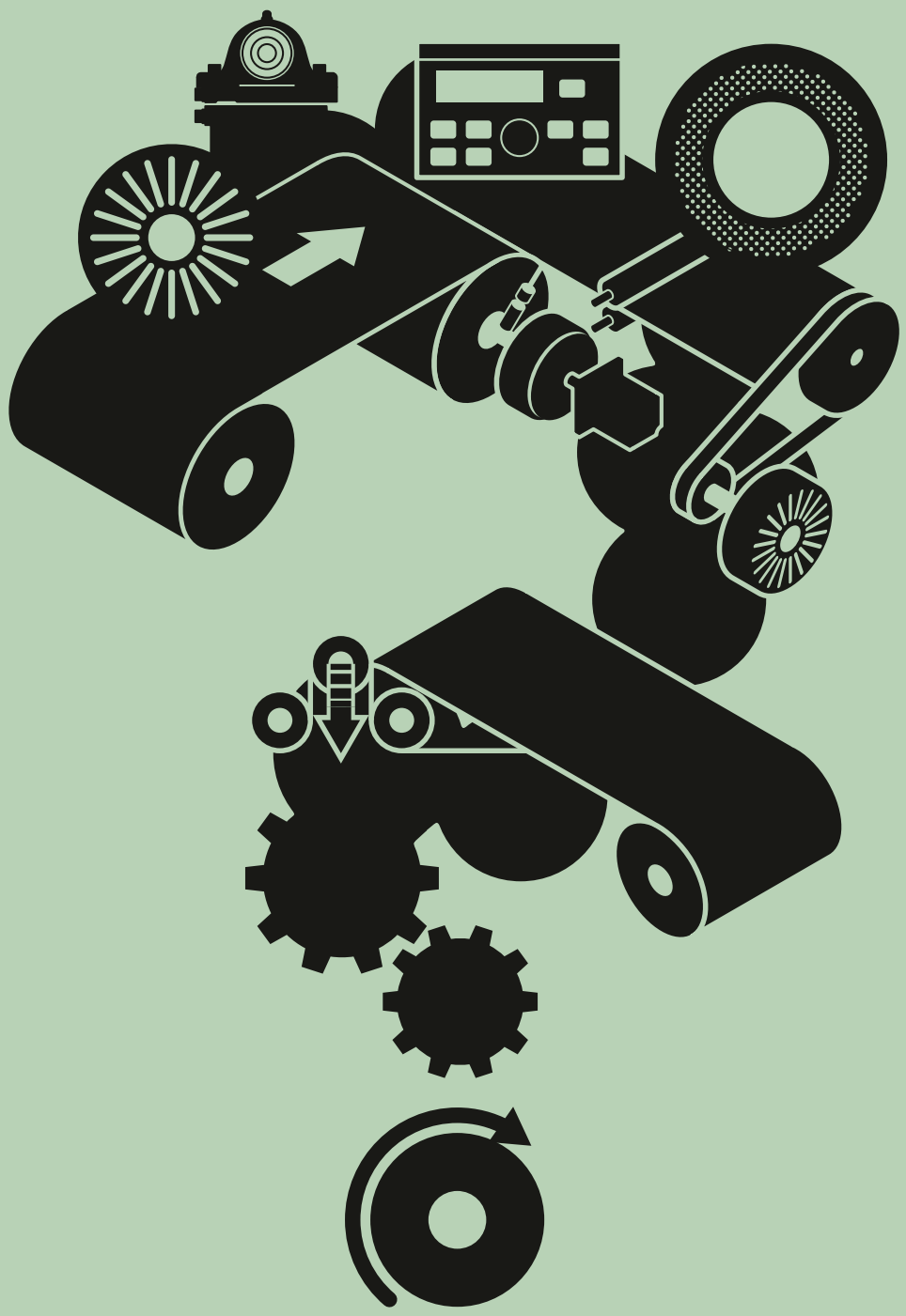

Tension Control Complete Guide

CONTENTS

Chapter 1 Outline of Tension Control

1-1 What is tension control? ····· 6
1-2 Places where tension control is used ····· 8
1-3 Products to which tension control is applied ····· 9
1-4 Tension control in manufacturing process ····· 10
1-5 Let's look for tension control around you ····· 14
1-6 Effect of introducing tension control ····· 16

Chapter 2 Basis of Tension Control

2-1 What is tension? ····· 20
2-2 What is torque? ····· 21
2-3 Forces causing tension ····· 21

Chapter 3 Torque Control and Speed Control

3-1 Torque control and speed control ····· 26
3-2 How to use torque control and speed control properly ····· 30
3-3 Examples of speed control ····· 30
3-4 System design flow ····· 32

Chapter 4 Types of Tension Control (Torque Control)

4-1 Manual control ····· 34
4-2 Open-loop control ····· 37
4-3 Closed-loop control ····· 40

Chapter 5 What Is a Tension Detector?

5-1 What is a tension detector? ····· 44
5-2 Types and features of tension detectors ····· 45
5-3 Selection of tension detectors ····· 46
5-4 Tension and load ····· 48
5-5 Cautions on attaching the tension detector ····· 49

Chapter 6 Actuator

6-1 Types and features of actuators ····· 54
6-2 Powder clutch/brake ····· 55
6-3 AC servo motor and inverter/motor ····· 58
6-4 Air clutches/brakes (manufactured by other companies) ····· 60
6-5 Differences between control using motors and control using powder ····· 61
6-6 Actuator selection flow ····· 62
6-7 Selecting an actuator ····· 63

Chapter 7 Basis of Tension Control System Construction

7-1 Basic tension control system ····· 78
7-2 Configuration of the tension control system ····· 83
7-3 Taper tension control ····· 90

Chapter 8 Application Examples

8-1 Business form printing machine ····· 92
8-2 Offset printing machine ····· 93
8-3 Gravure printing machine ····· 94
8-4 Screen printing machine ····· 95
8-5 Unwinder ····· 96
8-6 Punching machine ····· 97
8-7 Inflatable extruder + 2-shaft film winder ····· 98
8-8 Multiple cutter ····· 99
8-9 Slitter (1) ····· 100
8-10 Laminator ····· 101
8-11 Rolling machine ····· 102
8-12 Film cleaning machine ····· 103
8-13 Plating machine ····· 104
8-14 Winder ····· 105
8-15 Thickness measuring instrument ····· 106
8-16 Steel plate plating line ····· 107
8-17 Static electricity eliminating device ····· 108
8-18 Slitter (2) ····· 109
8-19 Laminator ····· 110
8-20 Film processing machine ····· 111

Chapter 9 Trouble Examples and Corrective Actions

Chapter 10 Questions and Answers

10-1 Frequently asked questions about powder clutches and powder brakes ····· 118
10-2 Frequently asked questions about tension controllers ····· 125

Chapter 1

Outline of Tension Control

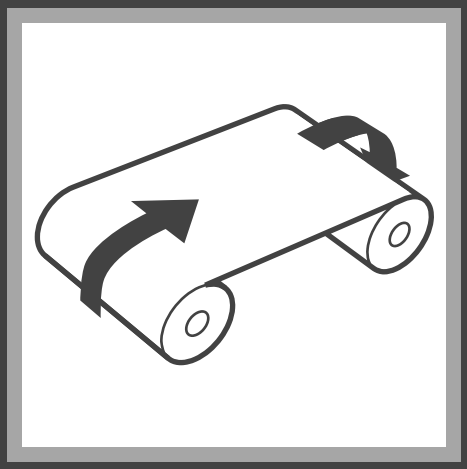

1-1 What is tension control?
1-2 Places where tension control is used
1-3 Products to which tension control is applied
1-4 Tension control in manufacturing process
1-5 Let's look for tension control around you
1-6 Effect of introducing tension control

Chapter 1

Outline of Tension Control

1-1 What is tension control?

Various processing including printing, coating and slitting is applied to long materials such as paper and films by using roll-to-roll type control.
To ensure stable processing, it is important to control the material tension properly and accurately.

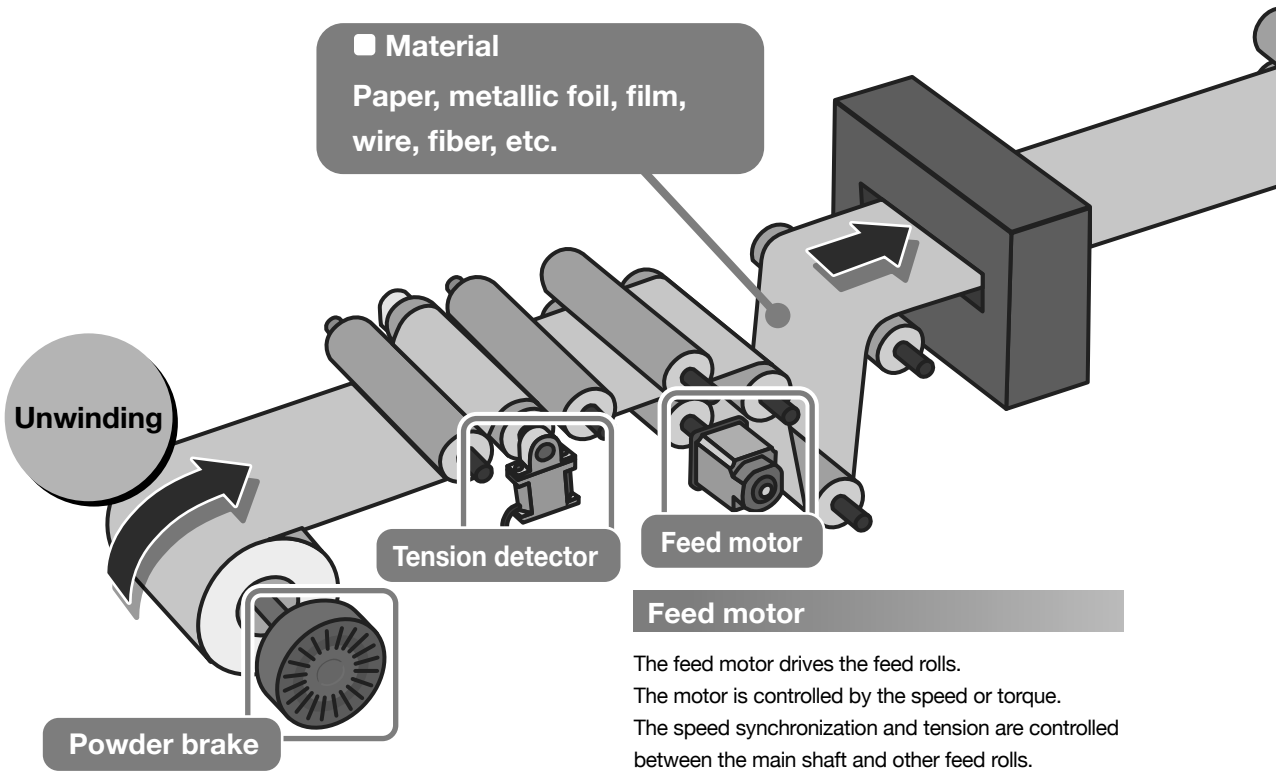

Feed motor

The feed motor drives the feed rolls.
The motor is controlled by the speed or torque.
The speed synchronization and tension are controlled between the main shaft and other feed rolls.

Unwinding section

The unwinding tension is determined by the braking torque of the powder brake installed in the unwinding section.
For keeping the tension constant, it is necessary to decrease the braking torque in accordance with the decrease of the reel diameter.

Equipment required for tension control

Powder clutch

Powder brake

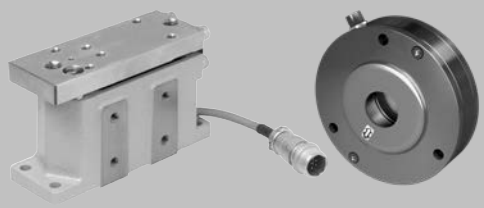

Tension detector

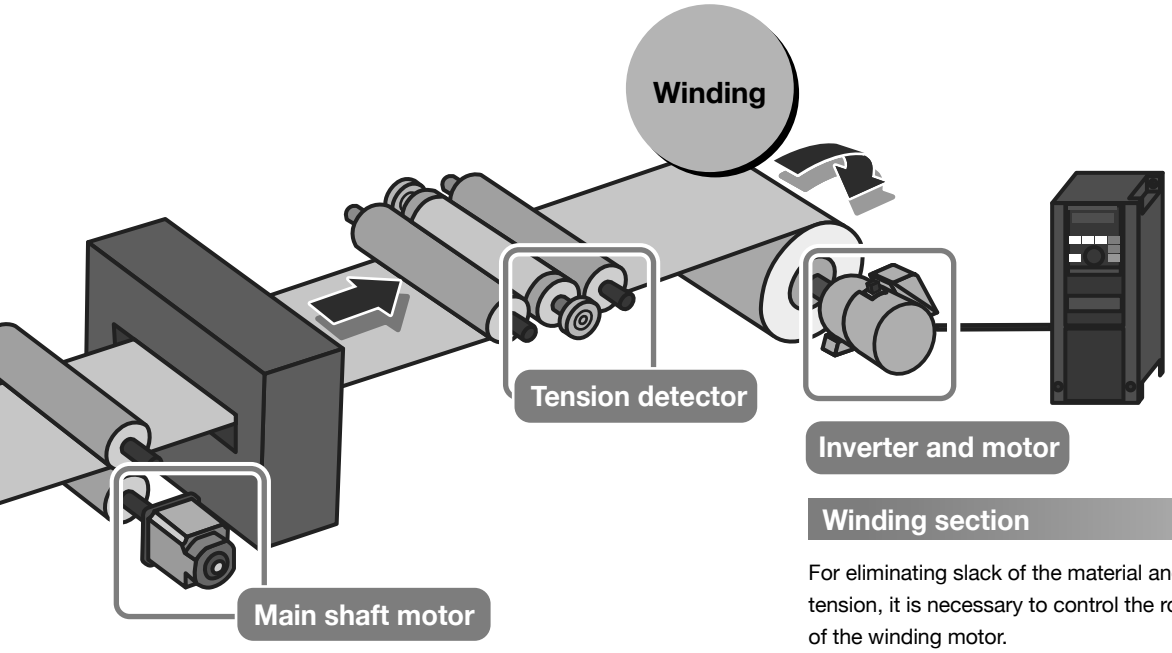

Winding section

For eliminating slack of the material and generating tension, it is necessary to control the rotation speed of the winding motor.
The winding speed can be adjusted correctly by vector control of the motor with the inverter.

Main shaft motor

The main shaft motor drives the main shaft to feed the long material from left to right.
The feed speed (line speed) is determined by the motor speed, which is not related to the tension.
However, a motor enabling large output is required when the tension is high.

Advantages of tension control

Accurate : Improving the processing accuracy

High speed : Improving the time efficiency

No waste : Improving the material efficiency


Tension controller


AC servo motor


Inverter


Vector control motor


Geared motor

1-2 Places where tension control is used

● Making materials

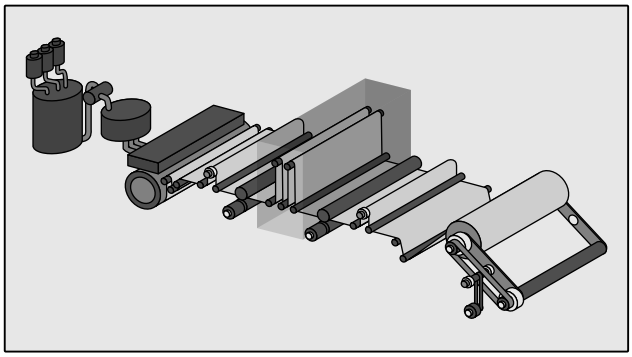

Films, paper, foils, wires and fibers

● Processing

Printing

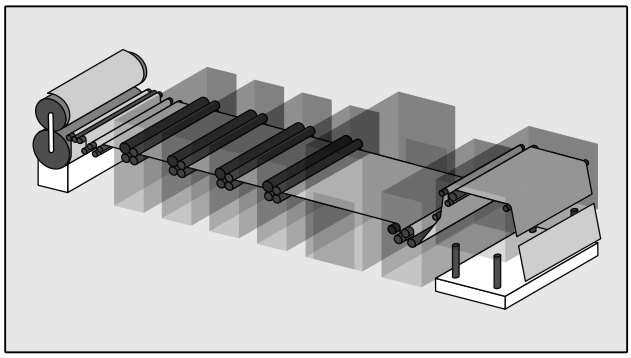

Slitting

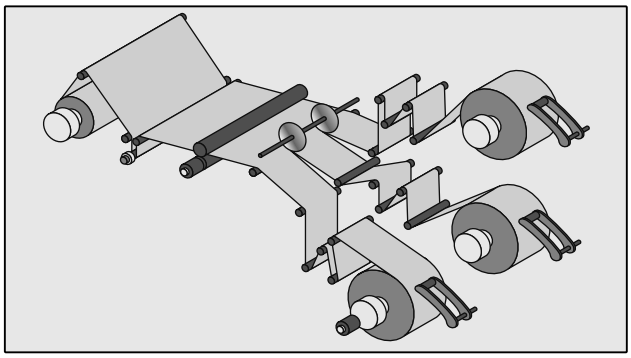

Coating

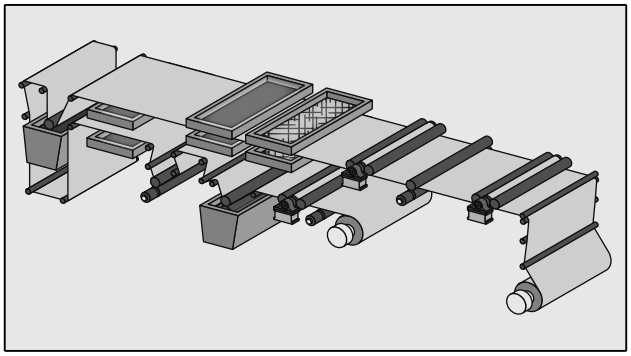

Laminating

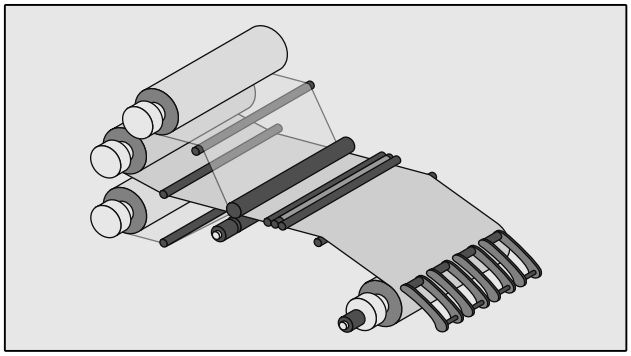

● Inspection

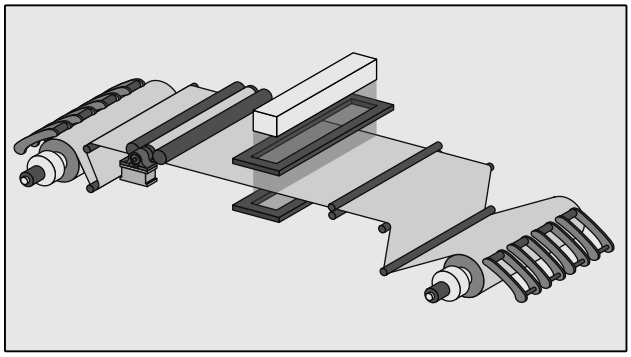

Quality control

1-3 Products to which tension control is applied

Paper	Plastic sheets	Films	Laminated products
Aluminum foils	Copper foils	Metallic foils	Wires
Electronic devices	Optical films	High-tech fibers	

- **Plastic shopping bag manufacturing process**

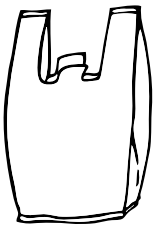

Plastic shopping bags (for supermarkets) and garbage bags are manufactured by an inflatable extruder.
Heated and melted material such as polyethylene and polypropylene is extruded into a cylindrical shape by blowing air. The extruded cylindrical material is cooled, made flat when the air is discharged from the cavity, shaped into a bag-shaped sheet, and then wound.

- **If the tension of the material (paper, film, etc.) is low**

If the tension of the material (paper, film, etc.) is low, the material may become slack or form wrinkles during printing.
If the tension is too high, the material may shrink after printing.
If the tension is unstable, color shift may occur during printing.

1-4 Tension control in manufacturing process

■ 1-4-1 Example: Snack food bag manufacturing process

This section explains various industrial machines which use tension control, while focusing on the snack food bag manufacturing process as an example.

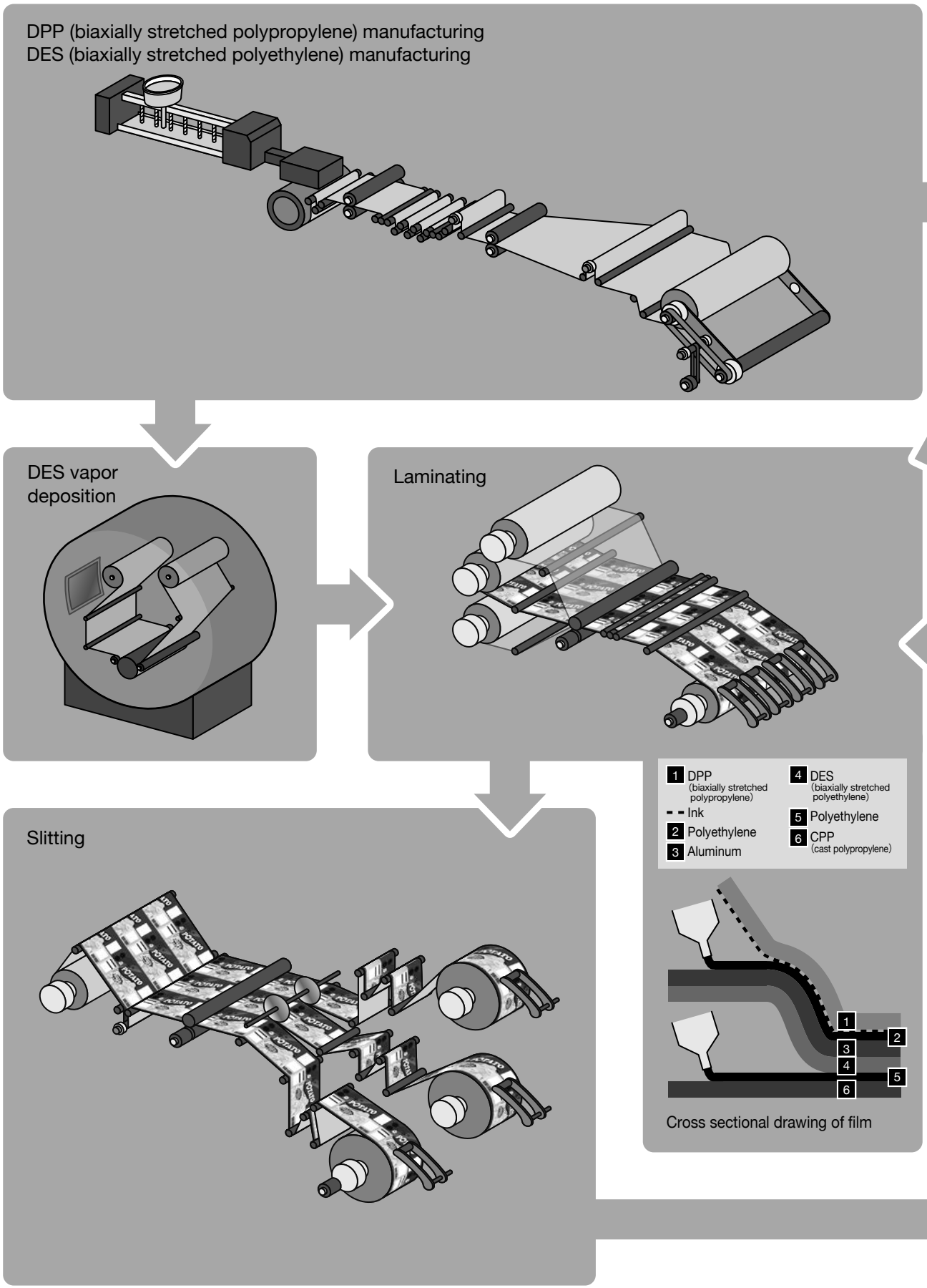

Snack food bags are manufactured using tension control technology.
These bags consist of six layers including an aluminum layer to shield snack foods against ultraviolet rays, oxygen, moisture, oil, etc. (for assuring preservability and safety), and keep the flavor.

Printing on polypropylene

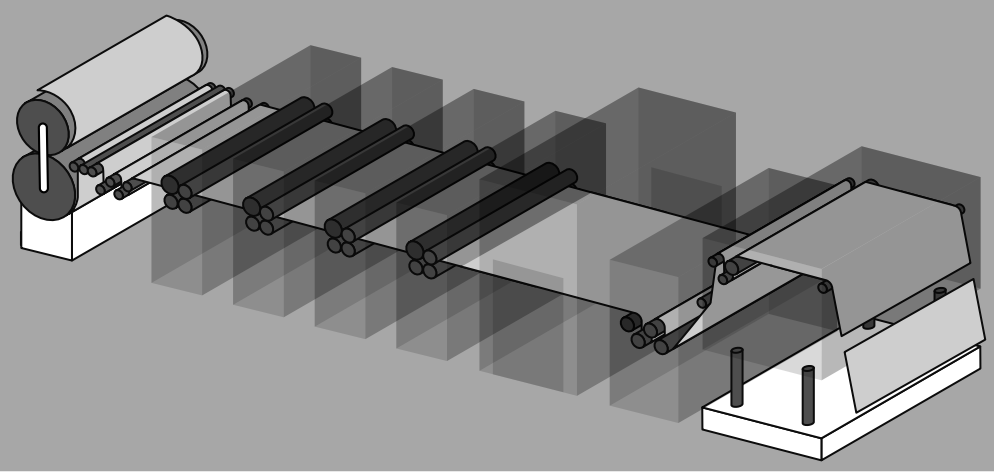

CPP(cast polypropylene) manufacturing

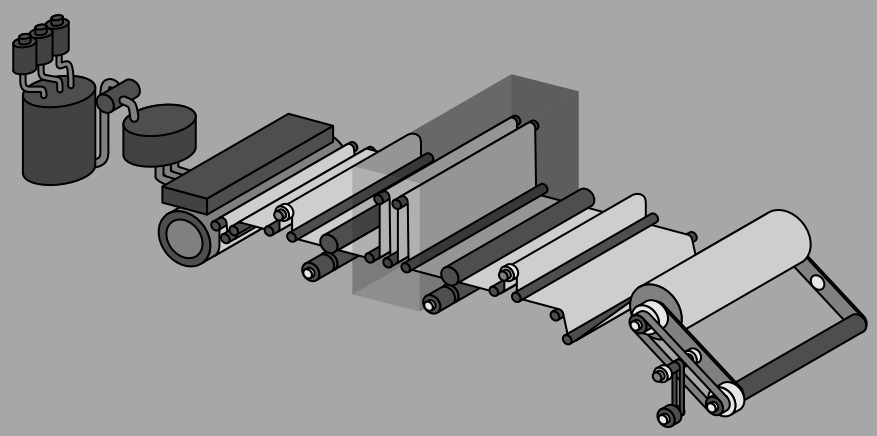

Bag making

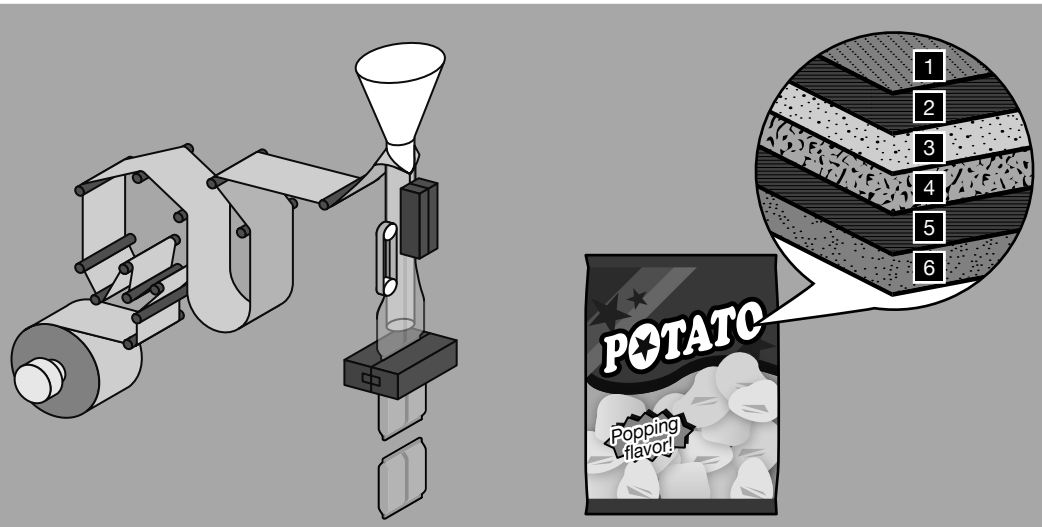

■ 1-4-2 Example: Lithium-ion battery production line

This section introduces an example of a process in which tension control is used in a production line for lithium-ion batteries.

Slitting

After the material is machined, it is cut with the slitter to fit in the battery container.

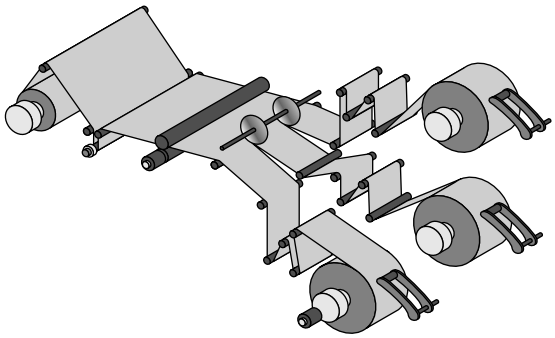

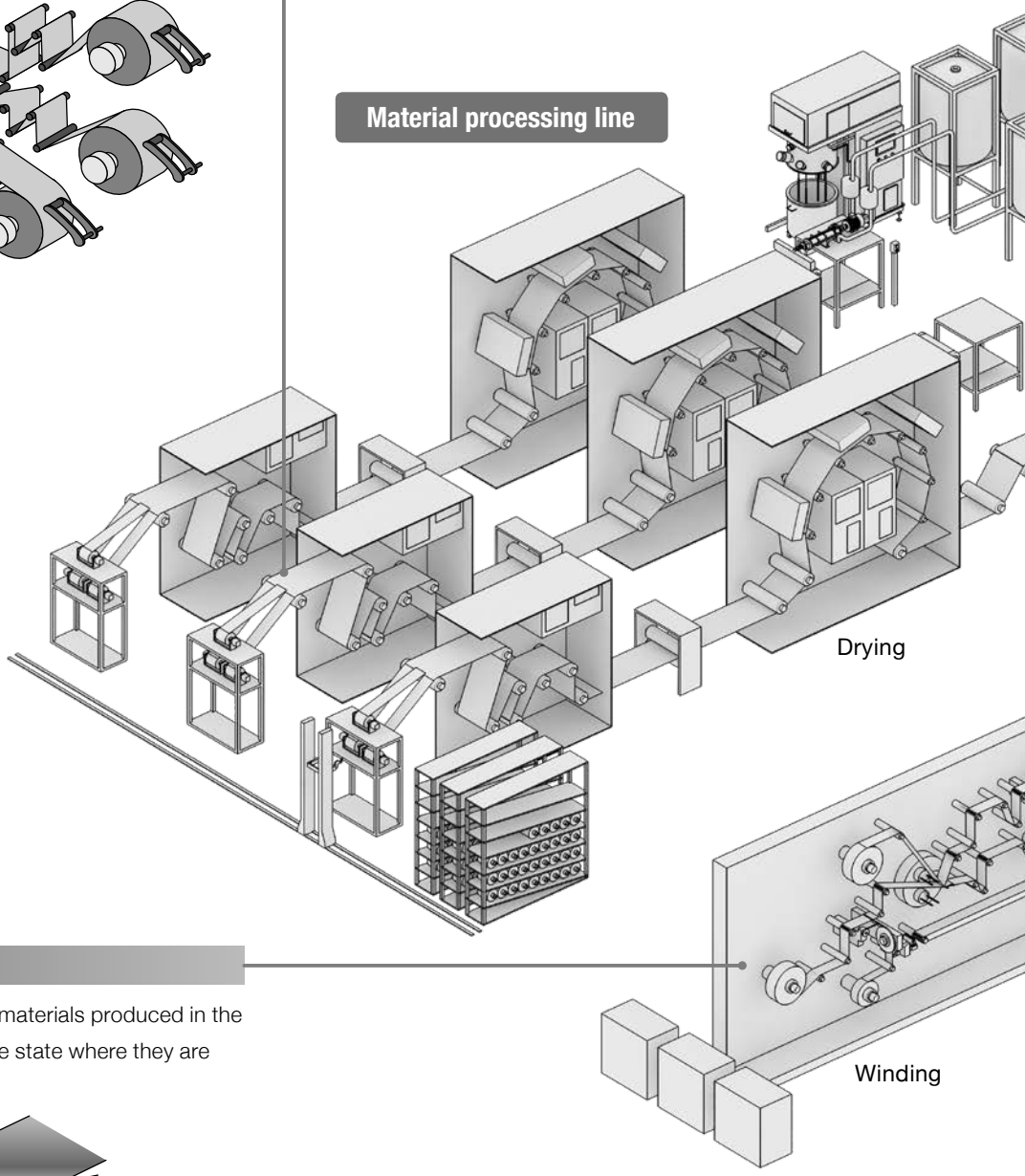

Winding

The positive and negative electrode materials produced in the material processing line are put in the state where they are insulated by the separator.

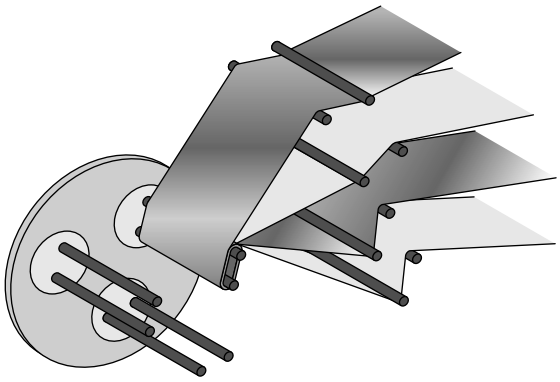

Coating

Apply slurry (mixture paint) to the positive electrode material (aluminum foil) and the negative electrode material (copper foil).

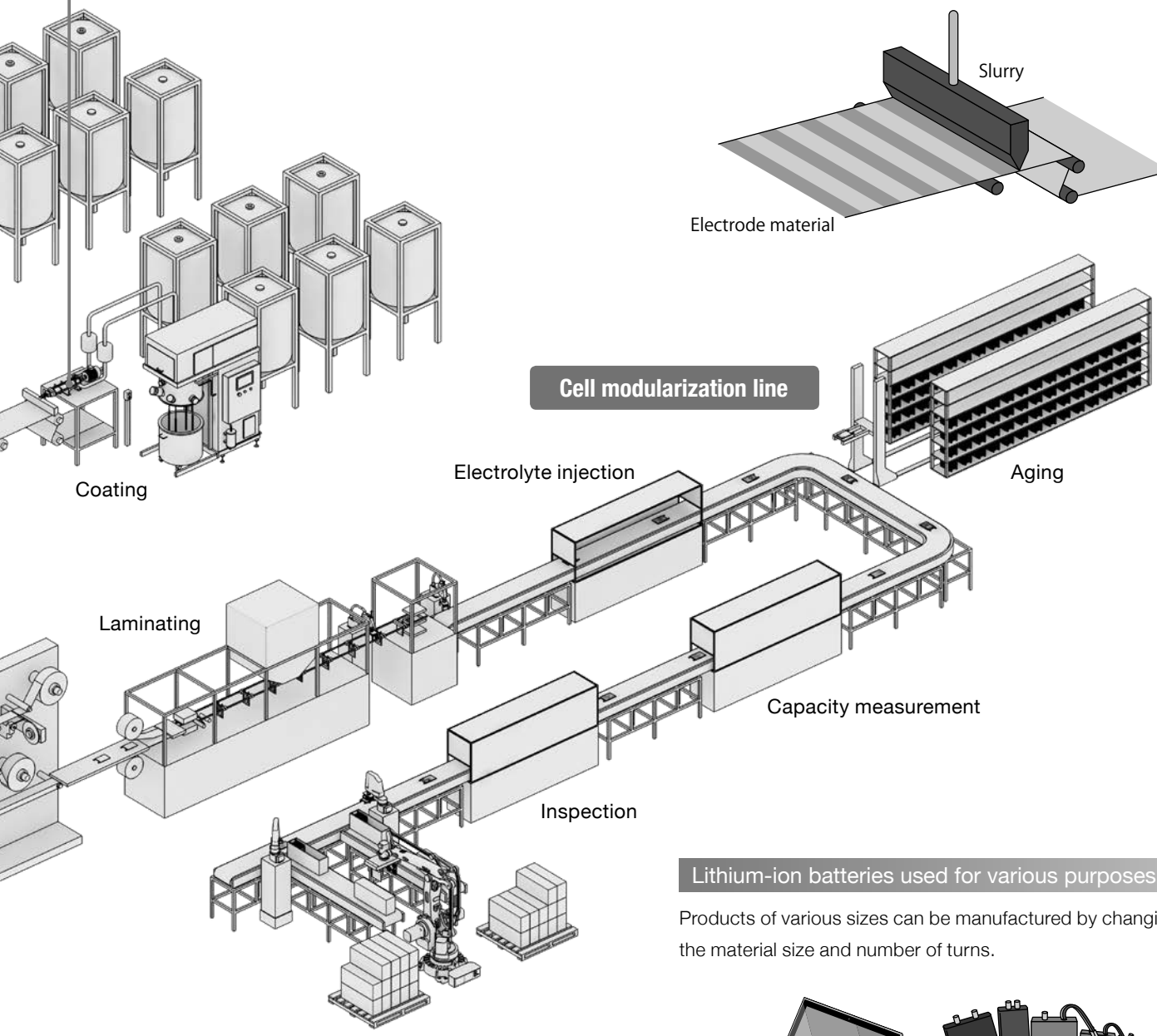

Lithium-ion batteries used for various purposes

Products of various sizes can be manufactured by changing the material size and number of turns.

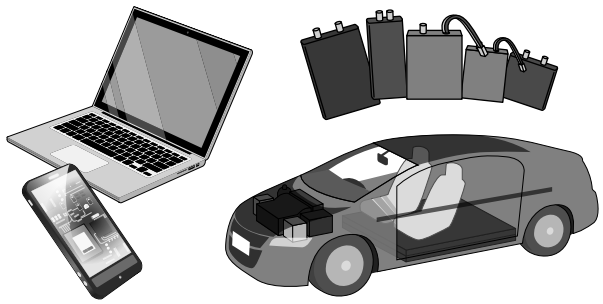

1-5 Let's look for tension control around you

Aircraft

● For example:

Carbon fiber is attractive for improving fuel efficiency, improving cruising range and reducing carbon dioxide emissions. Tension control technology is also used in the production of carbon fiber and for processing molded products containing carbon fiber.

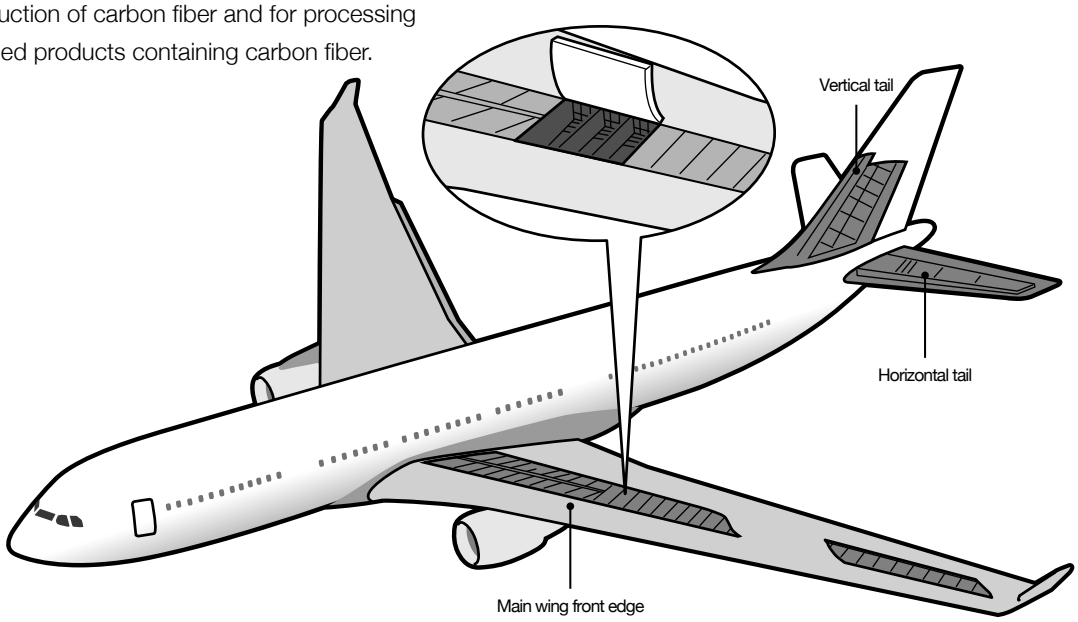

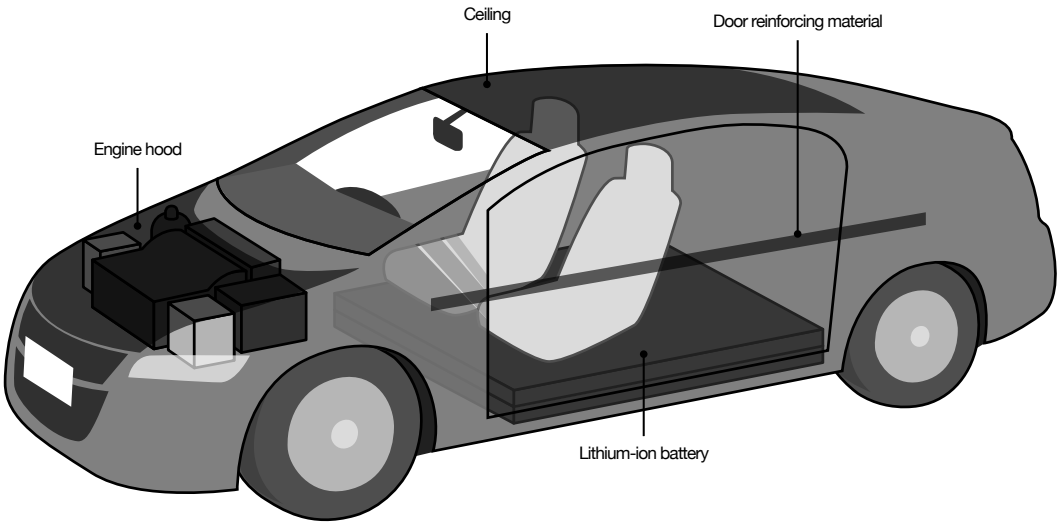

Automobile parts

● For example:

For the same purpose as with aircraft, tension control technology is used in processing molded products containing carbon fiber.

Lithium-ion battery

● For example:

Batteries such as for mobile phones are made by laminating thin metal foils such as aluminum. Advanced tension control is required to evenly laminate thin metal foils.

Ceramic capacitors

● For example:

Electronic circuits are built into mobile phones, and are mounted on printed-circuit boards.
Tension control technology is also used to manufacture cubic components of 1 to 2 mm called ceramic capacitors, a type of electronic component.

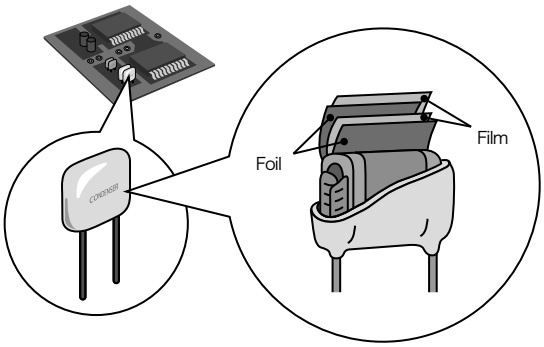

Polarizing plates and protective materials

● For example:

In liquid crystal televisions, tension control technology is used in high-function sheets for liquid crystal, film capacitors and others.

1-6 Effect of introducing tension control

● If tension control is not used

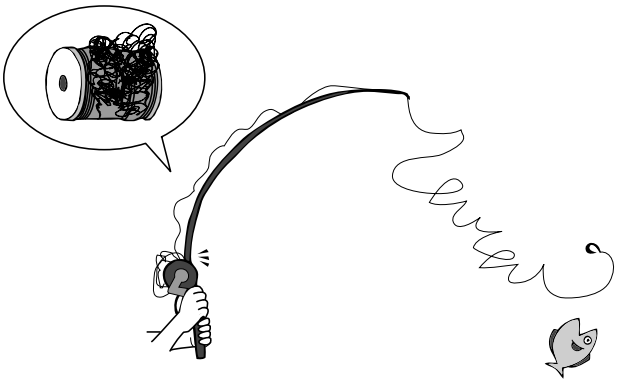

What happens when winding without tension control?
Imagine the shape of a roll of toilet paper unwound and then rewound by hand, or the shape of a fishing reel wound without a weight.
The shape will not be wound neatly!

■ 1-6-1 Improving the wound shape

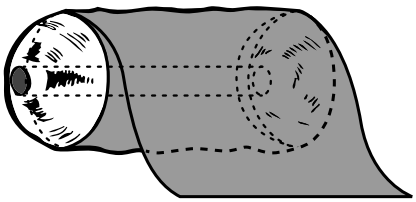

In the material processing and winding stages, satisfactory wound shape can be achieved by tension control.
If tension control is not performed properly, the following problems may occur:

- Chrysanthemum pattern:
  The center is crushed due to tight winding.
- Dented roll:
  The center is dented after winding.
- Arc-shaped curve and bamboo shoot:
  The material slips out of place during winding.
- Shoulder-missing roll:
  Both sides are missed during winding.

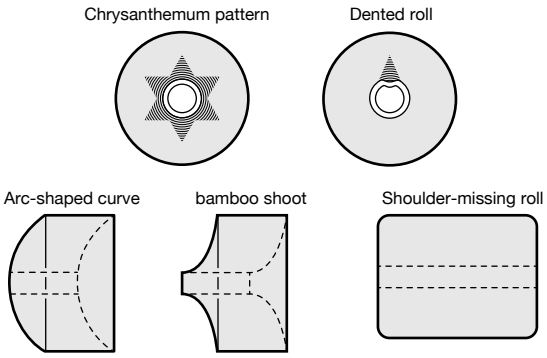

■ 1-6-2 Improving the printing quality

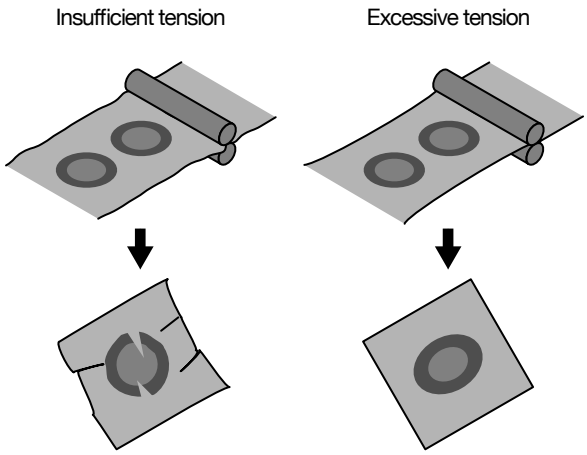

If the tension is insufficient, wrinkles form on the material surface during printing, and the printing pattern may become discontinuous.
If the tension is excessive, the material is stretched too much during printing. When the tension is lost after printing, the material may shrink and the printed pattern may be deformed.
By keeping the proper tension, neatly finished multicolor printing is achieved.
If the tension is not constant or fluctuates in each printing unit, colors may overflow or bleed, and the printed pattern may be deformed.

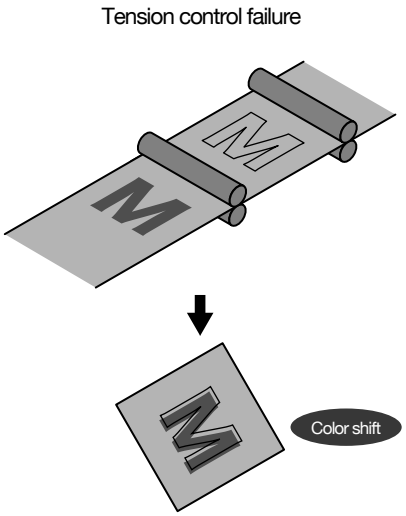

■ 1-6-3 Improving the processing quality in the slitter

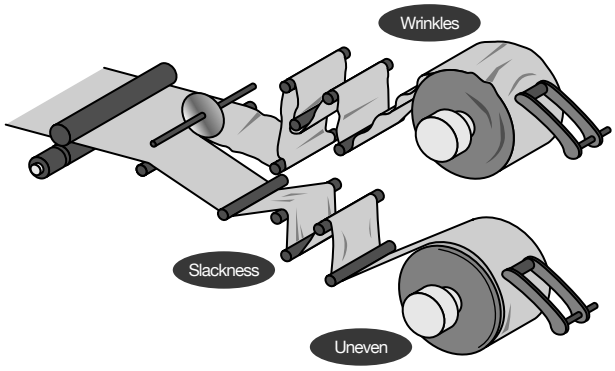

Tension control only in each winding reel shaft is not sufficient.
If the tension is not the same in the upper area and the lower area, the width may be uneven, and wrinkles and slackness may occur.

■ 1-6-4 Improving the processing quality in the laminator

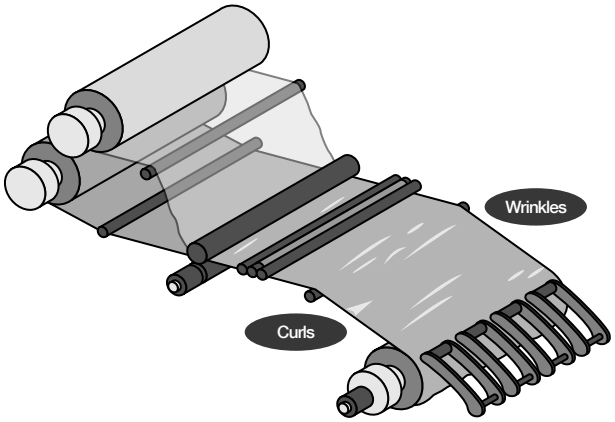

If the tension is not controlled properly between the upper area and the lower area, wrinkles and curls may form due to elongation and shrinkage of the material.

■ 1-6-5 Improving the processing quality in the coater

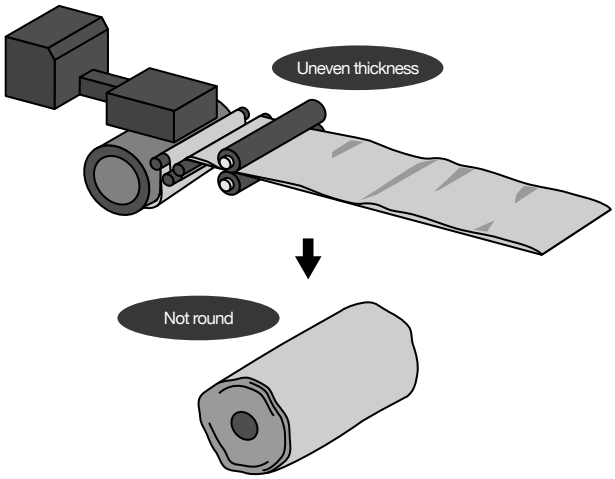

If the tension is uneven between before coating and after coating, the material thickness may become uneven and the product quality may deteriorate.

Point! Why is tension control required?

The purpose of tension control varies depending on the material and machine.
When the tension is controlled properly, the material can be transferred to the next process (such as printing, laminating and machining) with proper tension, which stabilizes the material travel, ensures dimensional accuracy and achieves satisfactory winding.

Chapter 2

Basis of Tension Control

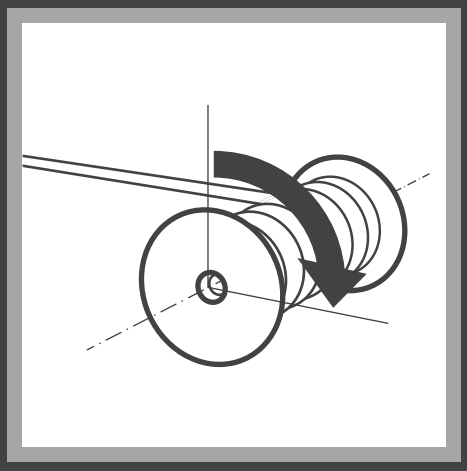

2-1 What is tension?

2-2 What is torque?

2-3 Forces causing tension

Chapter 2 Basis of Tension Control

2-1 What is tension?

Various physical phenomena occur in machines which process long materials.
However, it is difficult to link them with phenomena which occur in daily life.

● Pulling force and pulled force

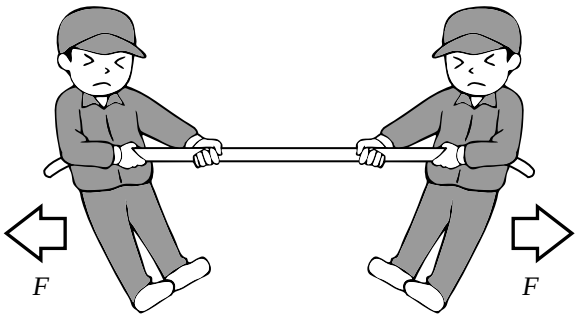

When two people pull a rope against each other, tension is applied to the rope.
Clearly, the pulling force (F) and the pulled force (F) balance each other and the same tension is applied by both people while the rope is stopped.

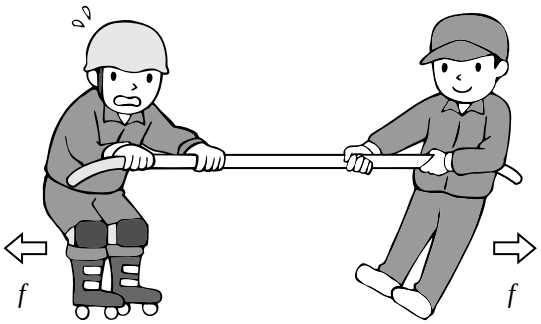

What is the tension when the rope is moving?
If one side is not fixed, the rope moves to the right. A smaller force (f) acts on the rope.
This means that the tension is not determined by the force on the pulling side when the rope is moving. The tension is affected by the force on the pulled side.

2-2 What is torque?

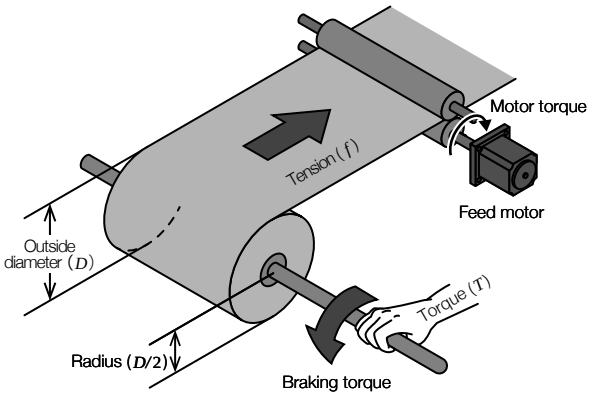

The left figure shows the relationship between the tension and the torque when a long material is fed out. The term "torque" refers to the force applied to the rotary shaft.
When a long material is fed out, it is fed rightward because the braking torque of the reel shaft is weaker than the motor torque.
In this case, the tension (f) applied to the material is determined by the braking torque (T) on the weaker side.
The expression below shows the relationship between the torque (T) and the tension (f) at that time:

$$\text{Tension } (f) = \frac{\text{Torque } (T)}{\text{Radius } (D/2)}$$

2-3 Forces causing tension

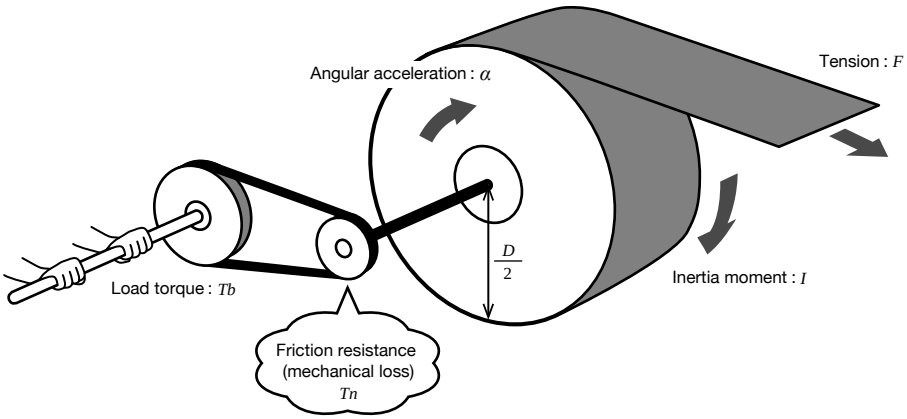

Next, let's consider an example of forces which cause tension in actual machines.
Which forces act when a long material is fed out?
The major forces are as follows:

- ◆ Tension generated by pulling: F
- ◆ Inertia moment: I
- ◆ Angular acceleration: α
- ◆ Torque generated when the angular acceleration changes during acceleration/deceleration: $I \times \alpha$
- ◆ Friction resistance generated by friction of the shaft: Tn
- ◆ Load torque: Tb (corresponding to the braking torque)

The following equation of motion shows the rotational motion:

$$F \times \frac{D}{2} = I \times \alpha + Tn + Tb$$

Tension | Radius | Inertia moment | Angular acceleration | Friction resistance | Load torque

"$I \times \alpha$" is generated when the angular acceleration changes during acceleration or deceleration, and has no effect when the speed is constant.
The friction resistance "Tn" is caused by friction resistance (mechanical loss) generated when the bearing which supports the shaft, gear or belt is driven.
"Tn" changes in accordance with the temperature and rotation speed. The bearing changes in accordance with the gap accuracy and seal type, and its value is not constant.
"Tb" is the load torque generated by the brake, etc.
To control the tension, it is necessary to control these three torques properly.

■ 2-3-1 Inertia moment

The inertia moment is an index which expresses the difficulty of rotating in the rotating body.
The mass in linear motion indicates the "difficulty of moving" and "difficulty of stopping" when a force is applied.
The inertia moment in rotational motion indicates the "difficulty of rotating" and "difficulty of stopping" when a force to cause rotation is applied.
For example, it is difficult to start rotating a reel shaft that has a large outside diameter or large mass, but the shaft inherently continues to rotate once it starts rotating. This property is referred to as "The inertia moment is large".
The expression below shows the property:

$$\text{Inertia moment} = \Sigma[(\text{Distance from center of rotation}) \times (\text{Mass})]$$

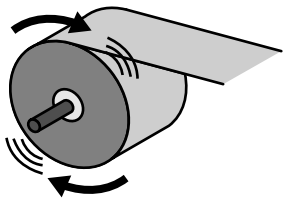

The inertia moment is small.

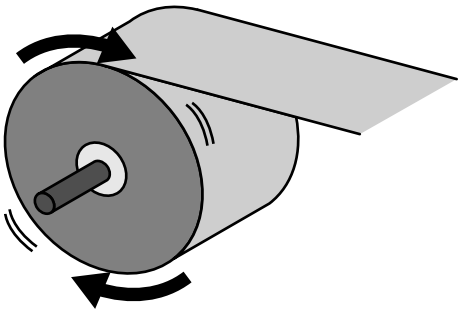

The inertia moment is large.

It is necessary to consider the inertia when accelerating or decelerating a rotating body. The torque "T" required for accelerating a rotating body whose inertia is "I" is as follows:

$$T = I \times \alpha$$

Accordingly, it is necessary to consider that the torque appears as tension on the + side (pulling side) when accelerating the rotating body by pulling it, and appears as tension on the - side (slacking side) when decelerating the rotating body.
Torque is not generated during steady operation at a constant speed because the angular acceleration " α " is 0.

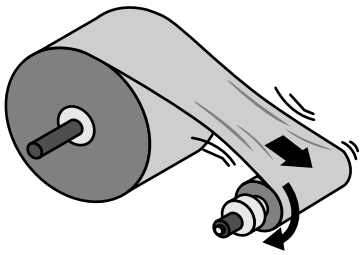

Accelerated

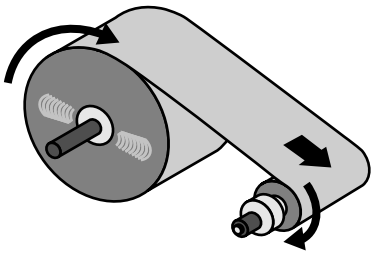

Constant speed

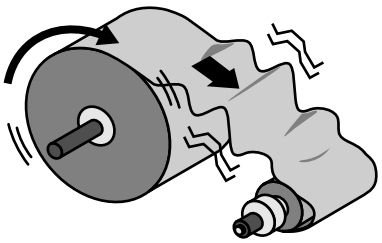

Decelerated

■ 2-3-2 Force generated by the friction resistance (mechanical loss)

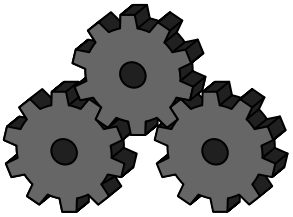

Gear

Bearing

When the shaft rotates, friction resistance is generated in the bearing which supports the shaft, gear, pulley, etc.
The friction resistance also causes tension.
Because the effect of the friction resistance cannot be ignored when controlling low tension, proper measures are required.

Point!

Let's study the basic concepts of tension, torque, inertia moment and friction resistance (mechanical loss)!

MEMO

Chapter 3

Torque Control and Speed Control

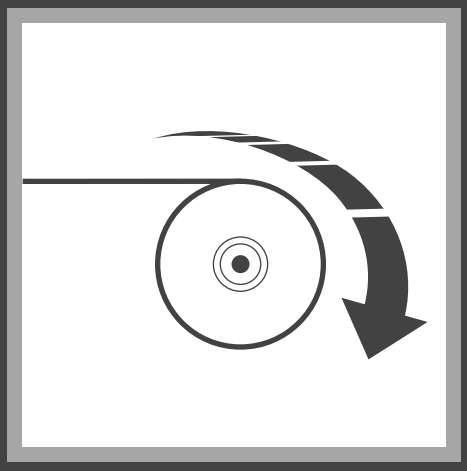

3-1 Torque control and speed control

3-2 How to use torque control and speed control properly

3-3 Examples of speed control

3-4 System design flow

Chapter 3 Torque Control and Speed Control

3-1 Torque control and speed control

There are two main methods of tension control, the method using torque control and the method using speed control.

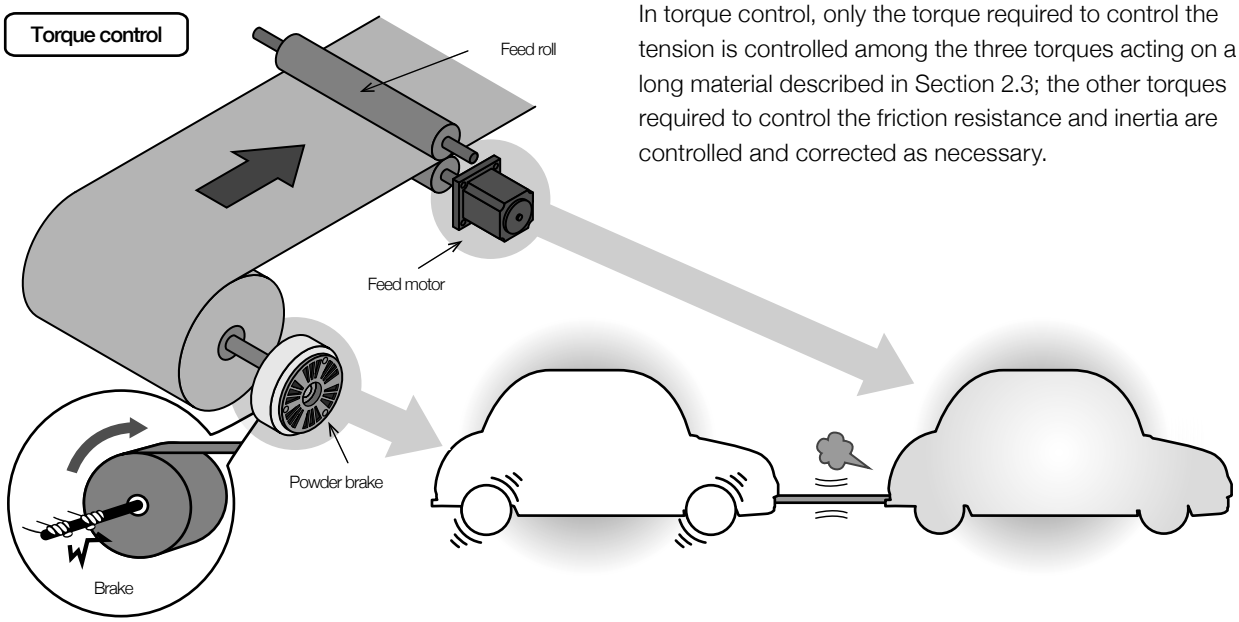

In torque control, only the torque required to control the tension is controlled among the three torques acting on a long material described in Section 2.3; the other torques required to control the friction resistance and inertia are controlled and corrected as necessary.

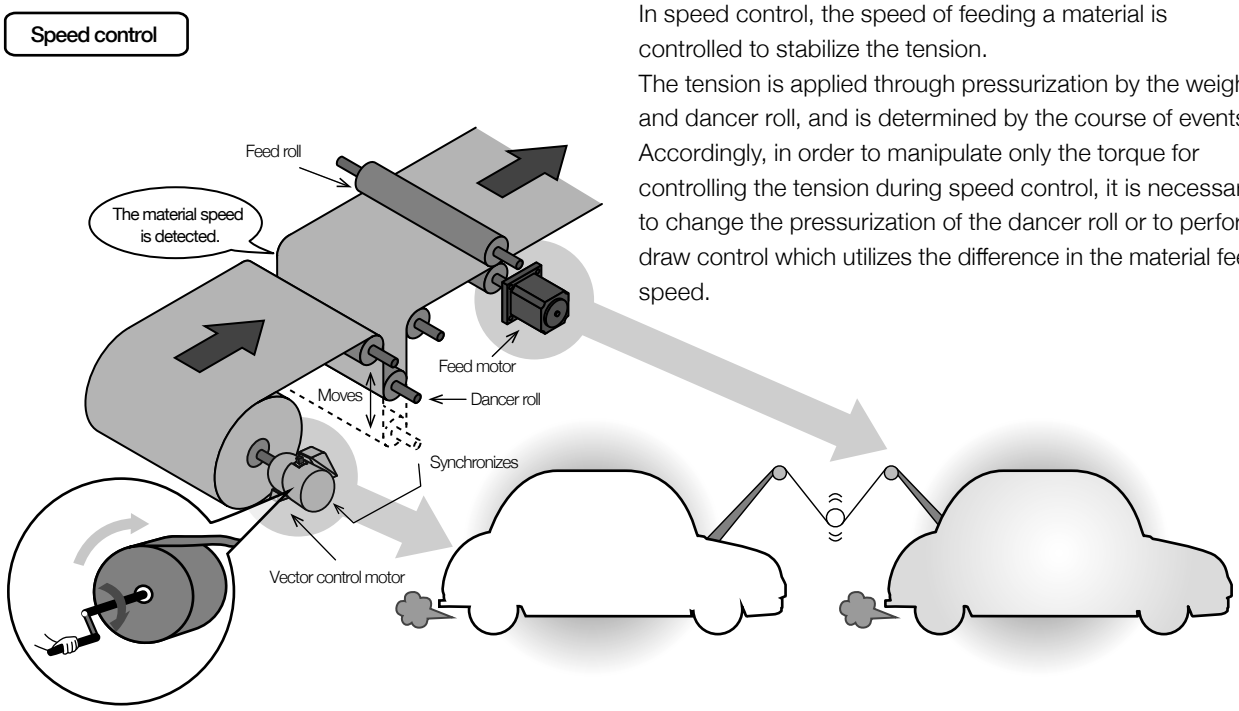

In speed control, the speed of feeding a material is controlled to stabilize the tension.
The tension is applied through pressurization by the weight and dancer roll, and is determined by the course of events. Accordingly, in order to manipulate only the torque for controlling the tension during speed control, it is necessary to change the pressurization of the dancer roll or to perform draw control which utilizes the difference in the material feed speed.

■ 3-1-1 Mechanism of torque control

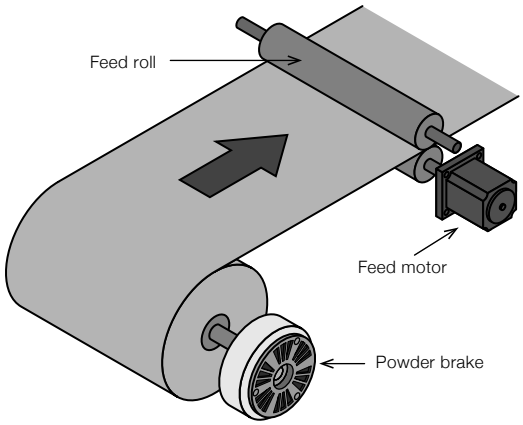

The left figure shows an example of torque control during unwinding. In torque control, the effect of inertia caused by acceleration/deceleration and the friction resistance are almost constant when the material moving speed is constant. Accordingly, the tension can be controlled easily only by applying a constant braking torque.
The rotation speed of the reel shaft is determined by the course of events based on the feed speed and reel diameter (material diameter wound around the reel shaft). By adopting an actuator* which generates a constant torque even if the rotation speed changes, the intended tension can be achieved easily without considering changes in the rotation speed of the reel shaft only by changing the torque for controlling the tension.

> * An actuator is:
> Driving equipment such as clutches, brakes and motors installed in the winding reel shaft and unwinding reel shaft.

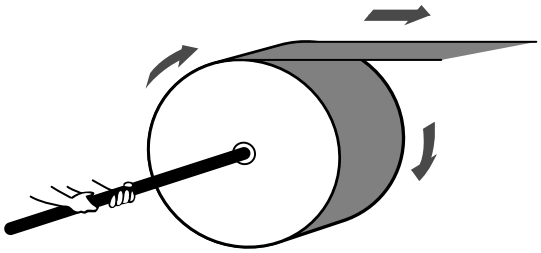

Control is difficult when the inertia is large!

On the other hand, if the effect of the inertia (inertia moment) during acceleration/deceleration and the mechanical friction change considerably during torque control, it is difficult to completely eliminate fluctuations of the tension caused by such changes.
As the reel diameter becomes larger, the inertia of the reel becomes larger accordingly, and the torque required to compensate the inertia increases.
Accordingly, torque control becomes more difficult with larger inertia and higher acceleration/deceleration speed.

Applicable equipment

Powder clutch
ZKB-BN

Powder brake
ZKB-XN

AC servo motor
MELSERVO-J4

Inverter
(for vector control)
FR-A800

Vector control motor
SF-V5RU

■ 3-1-2 Mechanism of speed control

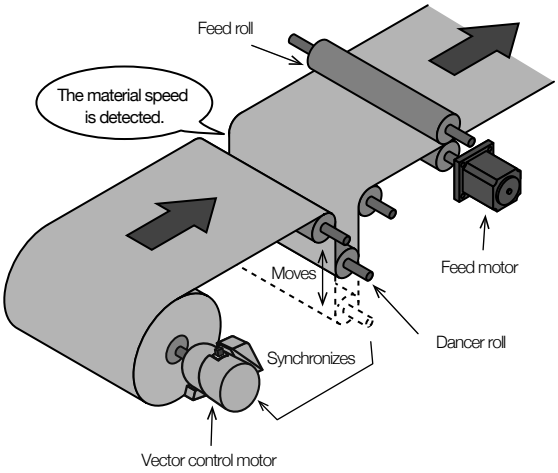

The left figure shows an example of speed control during unwinding.
In actual machines, the rotation speed of the motor which feeds out the material is controlled.
For applying the tension, the weight is hung on the dancer roll* as shown in the left figure or the dancer roll is pressurized by the air cylinder, etc.

> * A dancer roll is:
> A follower roll (guide roll) whose spindle can move longitudinally or laterally.
> The tension of the material is determined by the load applied to the dancer roll spindle.

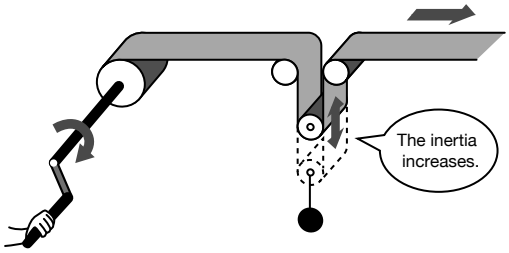

It is difficult to follow motions.

In speed control, the speed of the material moving in the machine is detected, and the machine is controlled so that other driving parts of the machine synchronize with the detected speed. Accordingly, it is easy to stabilize the movement of the material.
In addition, because the torque is determined by the course of events even if the torque caused by inertia and the torque caused by mechanical friction fluctuate, the stability of the material deteriorates less.
However, because it is not possible to change only the torque for controlling the tension, the tension accuracy is low. In speed control using a dancer roll, the tension is changed by the weight attached to the dancer roll or the pressurization applied to the dancer roll by the air cylinder, etc. If a weight is attached, the inertia of the dancer roll increases. As a result, the response of speed detection becomes low, and the tension may fluctuate in some cases.
If the dancer roll is pressurized by the air cylinder, etc., fluctuations in the air cause fluctuations in the tension.
Accordingly, the absolute control accuracy of the tension is lower than that in torque control.

■ Dancer roll

Dancer rolls are rollers which move considerably longitudinally or laterally, and are classified into weight dancer rolls, spring dancer rolls, etc.

● Weight dancer roll

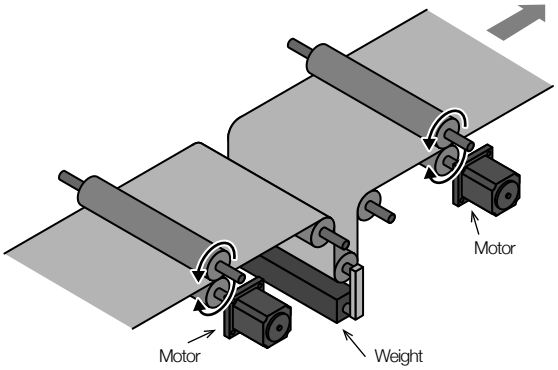

- The tension is 1/2 of the mass of the weight.
- The dancer roll position is not related to the tension.
- The dancer roll position depends on the difference between the input speed and the output speed.
- The material is easily made stable even during acceleration or deceleration.
- Synchronization is achieved easily even if the material between the driving controlled shafts is long.
- It is necessary to change the mass of the weight in order to change the tension.

● Spring dancer roll

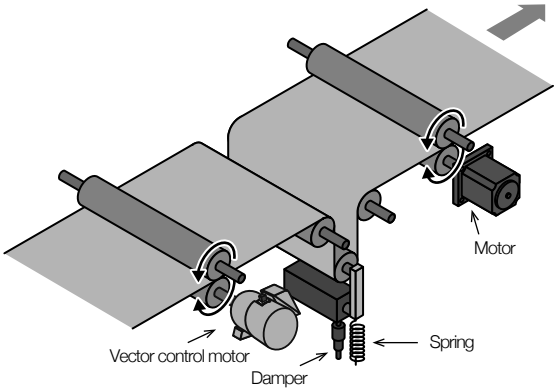

- The spring force of the spring causes the tension.
- The dancer roll position is changed by the tension.
- The dancer roll position is not changed by the difference in speed.
- The tension control accuracy is better compared with the weight dancer roll.
- The dancer roll absorbs shock.
- It is necessary to stabilize the spring (so a damper is required).

Applicable equipment

AC servo motor
MELSERVO-J4

Inverter
(for vector control)
FR-A800

Vector control motor
SF-V5RU

3-2 How to use torque control and speed control properly

	Torque control	Speed control
• Tension accuracy	**Good** The accuracy is determined by the torque generated by the actuator, and detailed control is possible.	**Bad** The tension is determined by the weight attached to the dancer roll or the pressurization by the air cylinder. It is not possible to change only the torque used for controlling the tension even if the tension changes.
• Availability of acceleration/deceleration • Considerable change in reel diameter • Low tension	**Bad** Control is difficult because it is affected by changes in the torque caused by changes in the inertia. Because the reel shaft can rotate only when it is pulled by a force overcoming the inertia of the reel shaft, the lower limit of tension is restricted.	**Good** Because the tension is determined by the weight attached to the dancer roll or the pressurization by the air cylinder even if acceleration or deceleration is performed, the control is less affected by acceleration or deceleration. Because the reel shaft can be driven, the tension can be made low by positively feeding out the material.

Torque control is not applicable to all usage conditions. In the same way, speed control is not applicable to all usage conditions.
It is necessary to select a proper method in accordance with the actual usage conditions. In order to select a proper method, it is necessary to understand the features of each method.

3-3 Examples of speed control

❶ Method using the tension detector*

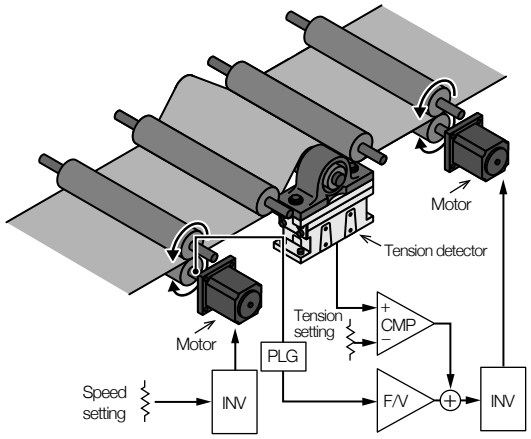

[Features of speed control using the tension detector*]

- Speed control can be performed using a simple configuration.
- The tension accuracy is better than the method using the dancer roll.
- The tension stability is rather low.
- The controllability considerably changes in accordance with the characteristics of the material.

* A tension detector is:
Equipment which converts the tension into load once, and takes the load as the electrical signal.

❷ Method using the dancer roll (Pressurization by air cylinder)

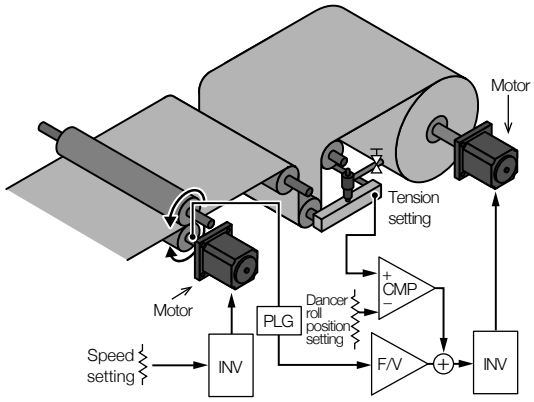

[Features of speed control using the dancer roll]

- The tension stability is high even with acceleration or deceleration.
- Synchronization can be easily achieved even if the path is long.
- The dancer roll absorbs shock.
- The tension accuracy depends on the air pressure and machine mechanism.

❸ Method using the dancer roll (Pressurization by powder clutch)

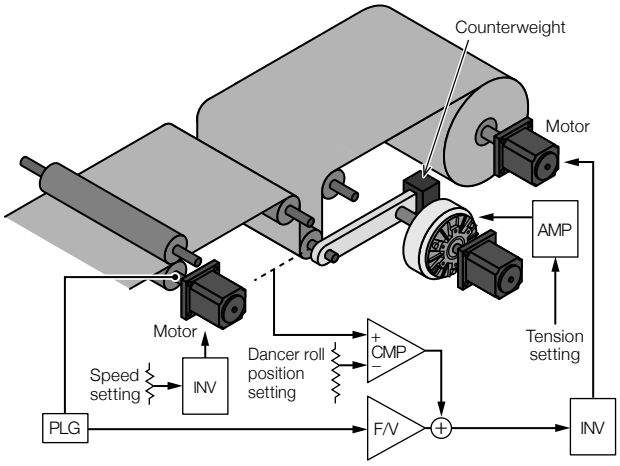

[Features of speed control using the powder clutch]

- The tension can be changed by the torque of the powder clutch.
- The dancer roll position depends on the difference between the input speed and the output speed.
- Synchronization can be easily achieved even if the path is long.
- The dancer roll position is not related to the tension.

❹ Method using draw control

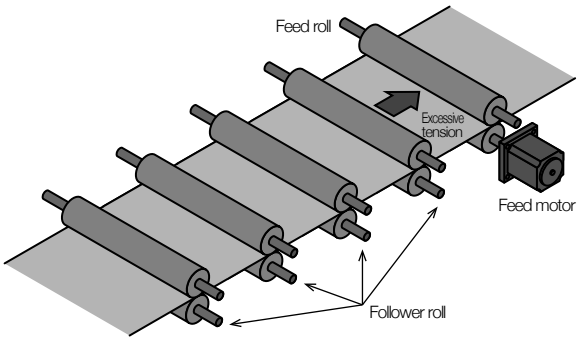

When many follower rolls are driven by the traveling material as shown in the left figure, the tension may become excessive toward the head area due to the effect of mechanical loss in the follower rolls.
For driving each follower roll to prevent excessive tension, it is necessary to control the speed in accordance with the elongation and shrinkage of the material.

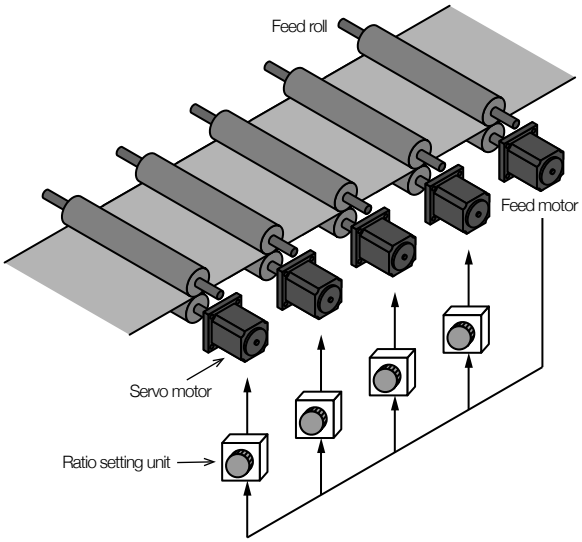

It is possible to drive each roll using the servo motors, and to drive the servo motors in the rear area at a higher speed than the servo motors in the front area using the ratio setting units as shown in the left figure.
The elongation percentage is approximately 0.1 to 5%.

The method of driving rolls in the rear area at a higher speed in this way is called draw control. The operation tension is determined by the elongation percentage property of the material.

Applicable equipment

AC servo motor
MELSERVO-J4

Inverter
FR-A800

Stationary tension detector
LX-TD

Flange-type tension detector
LX7-F

3-4 System design flow

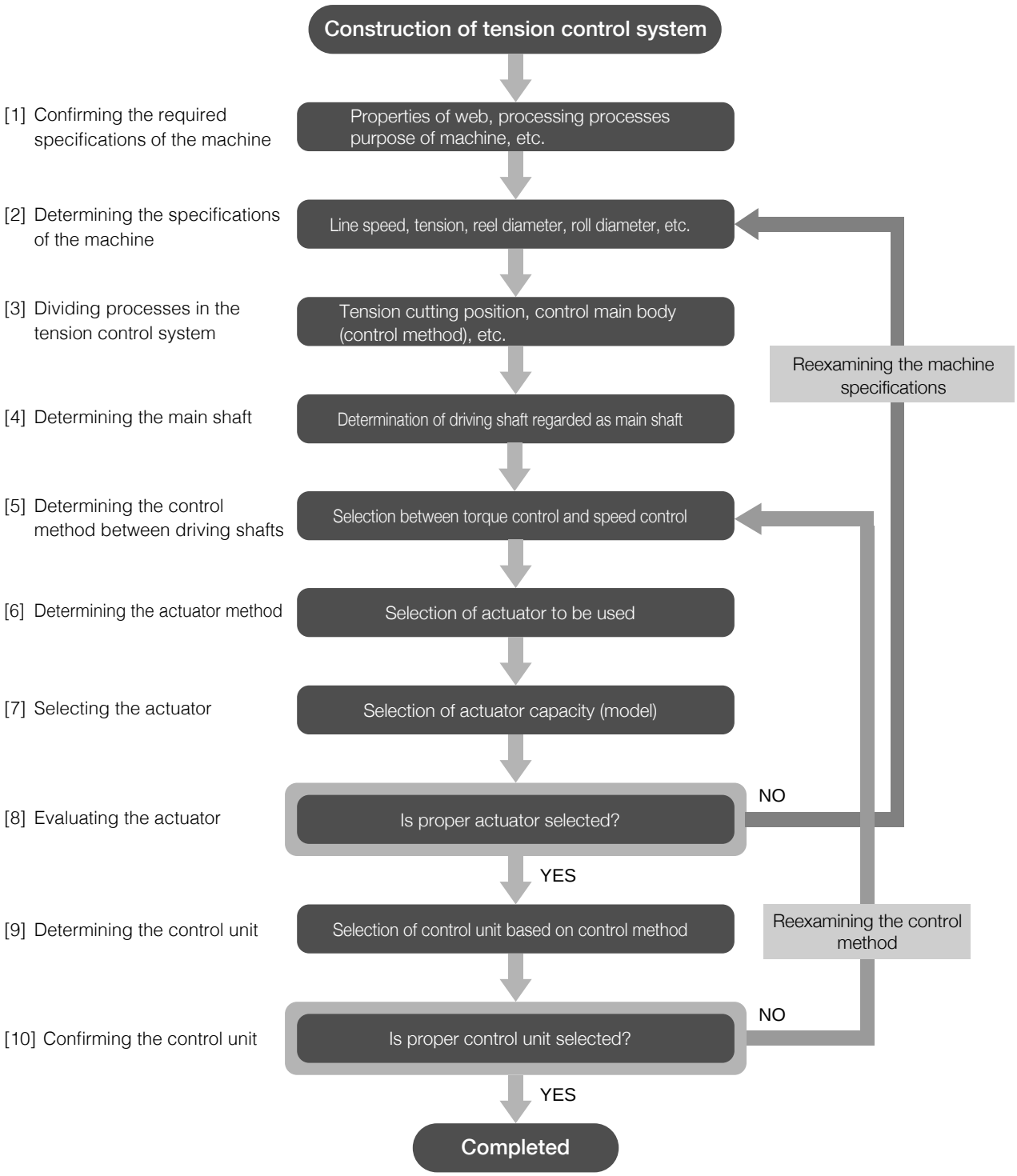

Point!

Let's consider the combination of control type (torque control or speed control) and auxiliary device (dancer roll or tension detector).

Chapter 4

Types of Tension Control (Torque Control)

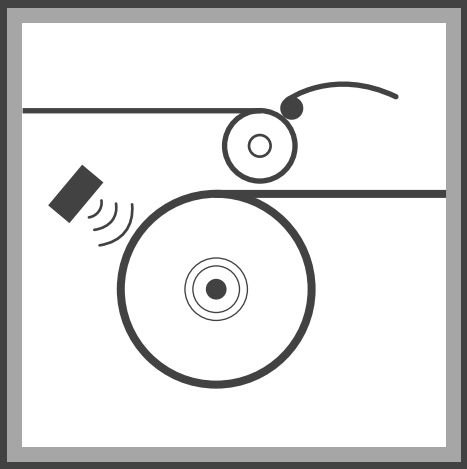

4-1 Manual control

4-2 Open-loop control

4-3 Closed-loop control

Chapter 4 Types of Tension Control (Torque Control)

Tension control (torque control) is classified into three types: "manual control", "open-loop control (reel diameter detection method)" and "closed-loop control (tension feedback method)".

4-1 Manual control

■ 4-1-1 What is manual tension control?

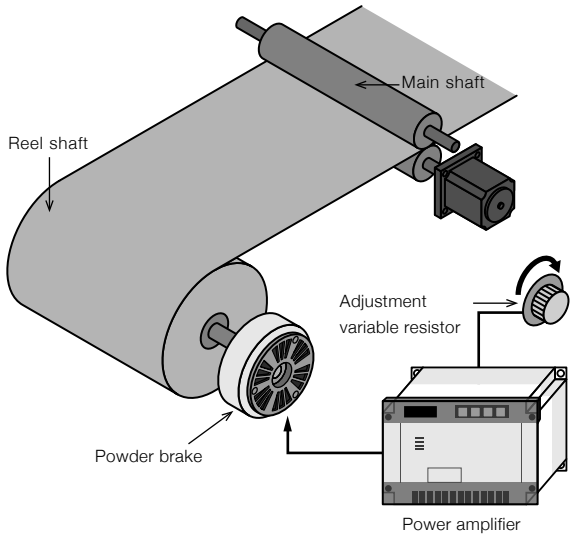

In manual tension control, the excitation current or applied voltage of the clutch or brake is adjusted gradually in accordance with changes in the reel diameter during winding or unwinding so that almost constant tension can be obtained. Various power supply units are available in manual control including the one which automatically compensates changes in the supply voltage and the one which offers constant current even if the temperature of the excitation coil changes in the clutch or brake.

[Advantages]

- ◆ When compared with the mechanical type
  - The control stability is high.
  - Adjustment is easy.
- ◆ The initial cost of introduction is low.

[Disadvantages]

- ◆ The control accuracy is low.
- ◆ The control quality depends on the human senses.
- ◆ Only gradual control is available.

Applicable equipment

Manual power supply unit
LD-40PSU

Power amplifier
LE-50PAU

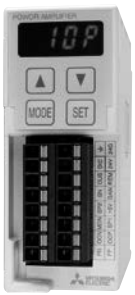

Power amplifier
LD-10PAU

The LD-40PSU (constant-voltage type manual power supply unit) incorporating the adjustor, LE-50PAU (constant-voltage/ constant-current selectable type power amplifier) to be combined with an external adjustor and LD-10PAU (constant-current control type power amplifier) are available. Among them, the power amplifiers are used also to amplify the output signal from the tension controller described later and excite the clutch or brake.
Various other power supply units and parts are available.

■ 4-1-2 Usage example of manual power supply unit

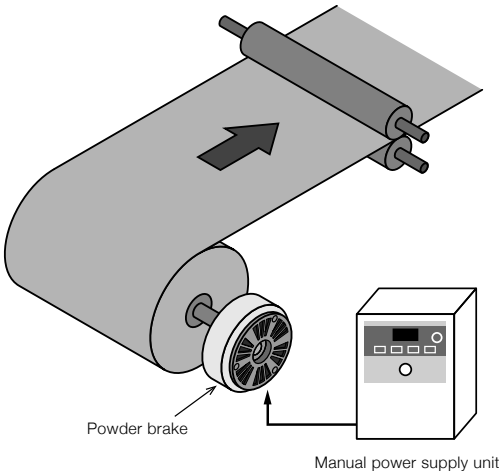

When the reel diameter ratio (Maximum diameter/Minimum diameter) is small in the processing machine for paper, film, wire, etc., for the intermediate shaft whose reel diameter does not change, or when high tension accuracy is not required, the manual power supply unit is used as shown in the left figure.
Though high tension accuracy is not expected, the tension can be changed easily using the variable resistor provided on the panel of the power supply unit. In addition, because the structure is simple, the tension can be adjusted at low cost.

■ 4-1-3 Usage example of power amplifier

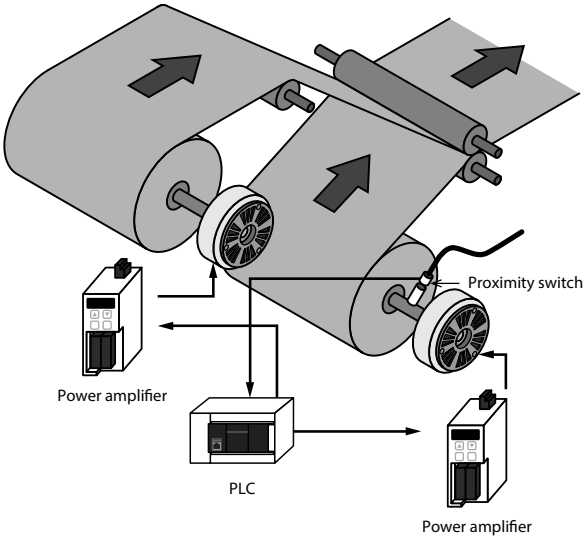

When there are many controlled shafts and the PLC performs centralized control, it is recommended to use the power amplifier as shown in the left figure so that the powder brake/clutch can be used very easily.

■ 4-1-4 Usage example of power amplifier unit (In motor inspection)

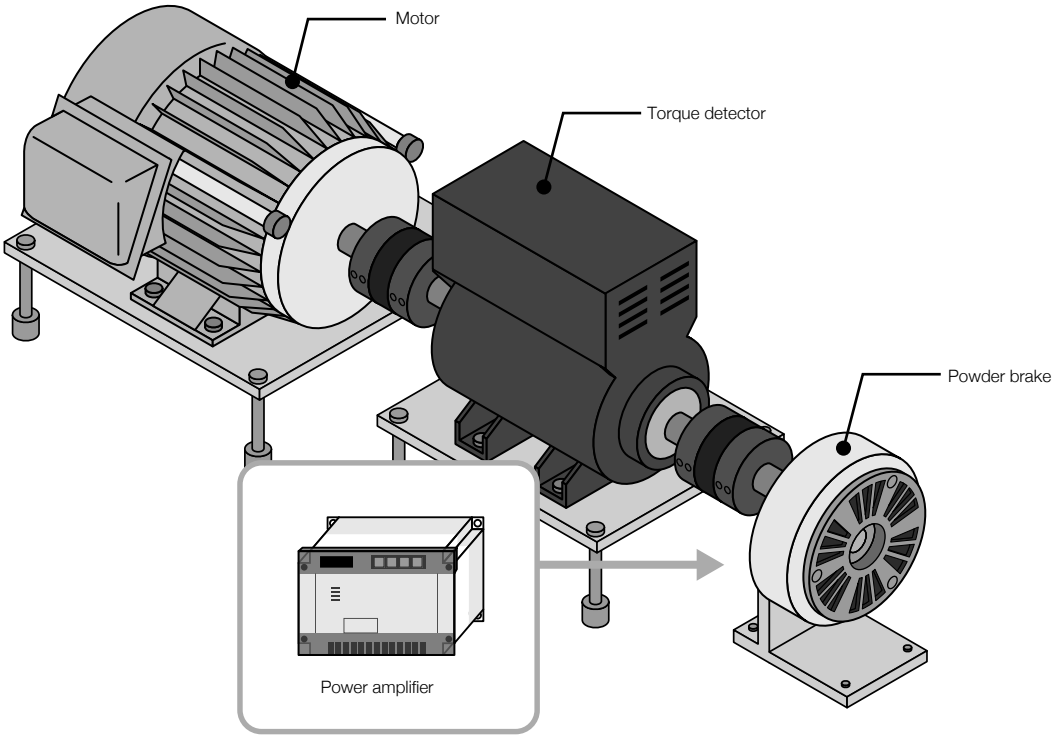

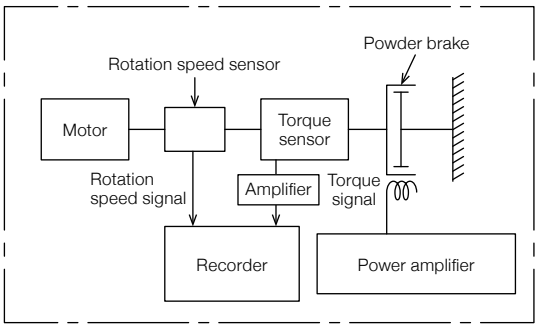

The powder brake is effective as a load of the motor load testing unit.
As an example, select a powder brake for measuring the characteristics of a motor with speed reducer whose output is 600 W (Torque: 44 Nm, rotation speed: 130 r/min) as shown in the left figure.

The heat dissipation "P" is as follows:

$$P = 0.105 \times T \times Nr = 0.105 \times 44 \times 130 = 600\ (W)$$

(As shown in the calculation result, the motor output is equivalent to the heat dissipation of the powder brake.)

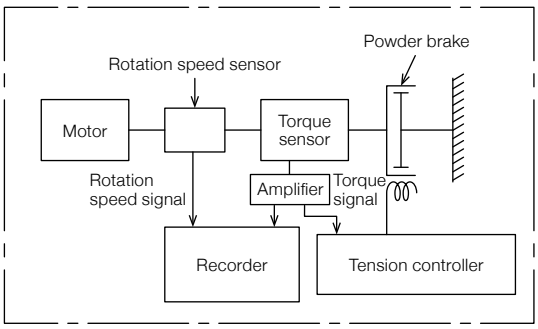

Select the powder brake ZKB-5HBN. (Allowable continuous heat dissipation: 1100 W, rated torque: 50 Nm, allowable rotation speed: 1800 r/min)
The load torque applied to the motor is changed by changing the excitation current of the powder brake using the constant-current type power amplifier, and then changes in the motor current and rotation speed are recorded.
Feedback control is enabled when the signal from the torque detector is sent to the tension controller.

4-2 Open-loop control

■ 4-2-1 What is open-loop control?

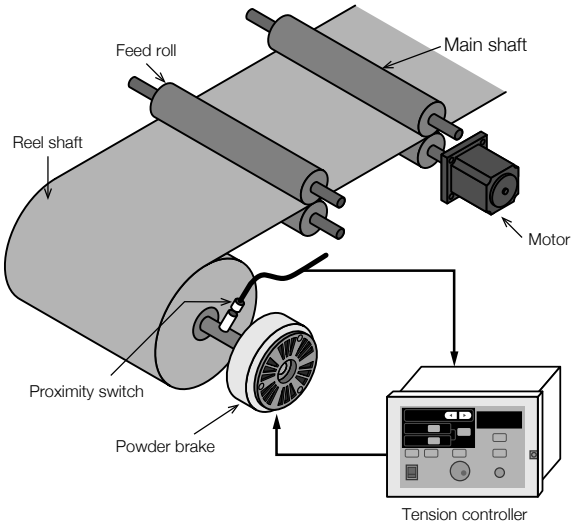

In open-loop control, the reel diameter is detected in the winding section and unwinding section, and the winding torque and unwinding braking torque are controlled based on the reel diameter.
When the tension is kept constant in open-loop control, the reel diameter and reel shaft torque are controlled proportionally. As a result, stable tension control is achieved without the sensitive effect of abrupt disturbances compared with the tension detection method (closed-loop control) described later.
Open-loop control is available also in simple taper control and control of such machines that cannot be combined with the tension detector.
However, because open-loop control is affected by torque changes and linearity of the actuator and mechanical loss, the absolute accuracy of tension is rather lower than feedback control.

[Advantages]

- ◆ The initial cost of introduction is lower than that of closed-loop control.
- ◆ Stable control is achieved.
- ◆ A tension detector is not required.
- ◆ Taper control is easy.

[Disadvantages]

- ◆ The effect of mechanical loss and actuator characteristics cannot be ignored.
- ◆ The controlled tension cannot be grasped.

Applicable equipment

Tension controller
LE7-40GU-L + LE7-DCA
(Reel diameter calculation option)

Open-loop tension controller
LD-30FTA

Open-loop tension controller
LD-10WTB-CCL

■ 4-2-2 Reel diameter detection and calculation method

Method to detect the reel diameter by touching the material
- Touch arm (lever) method

Method to detect the reel diameter without touching the material
- Ultrasonic method

Method to calculate the reel diameter without touching the material
- Integrated thickness detection method
- Speed & thickness setting method
- Ratio calculation method

● Touch arm (lever) method

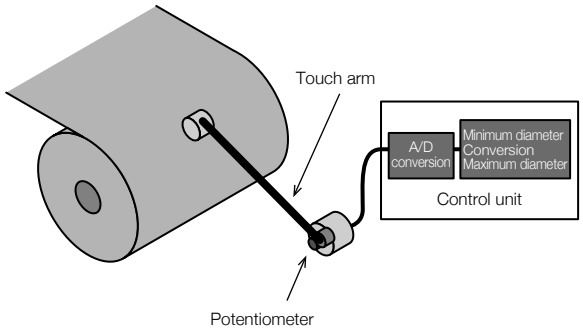

In this method, the moving angle of the roll in contact with the reel diameter is detected by the motion of the lever, and a signal in proportion to the reel diameter is obtained.

- ◆ The potentiometer, differential transformer, etc. are available as arm angle detection sensors.
- ◆ Care is required so that the material surface is not damaged by the contact.
- ◆ It is necessary to adjust the pressing pressure of the arm.

● Ultrasonic method

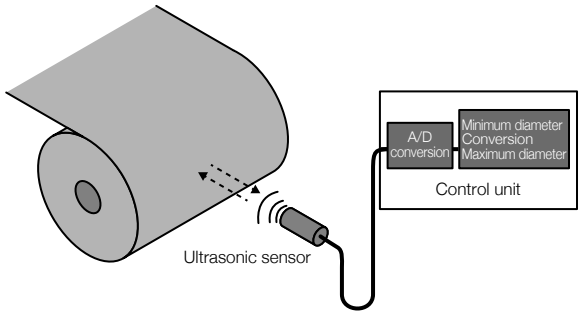

In this method, the signal returned by reflection is read by the ultrasonic sensor, and then the reel diameter is obtained.

- ◆ The material is not damaged because contact is not required.
- ◆ Some materials cannot be detected by the ultrasonic sensor.
- ◆ The reel diameter increase/decrease direction does not agree with the voltage change direction.

● Integrated thickness detection method

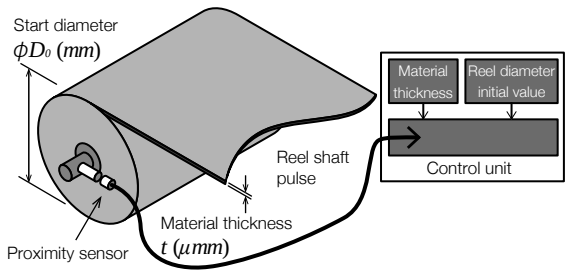

In this method, the reel diameter is calculated from the reel shaft rotation speed detected by the proximity switch attached to the reel shaft, reel shaft initial value and material thickness.
In this method, the current reel diameter is obtained by calculating the accumulated material thickness with reference to the reel diameter initial value by utilizing the fact that the reel diameter changes by twice the material thickness per rotation of the reel shaft.

- ◆ The noncontact type reel diameter calculation can be performed easily only by installing one proximity sensor.
- ◆ Errors may be generated due to elongation of the material and involvement of the air.
- ◆ When the material is thick, the pulse number per rotation can be increased.

● Speed & thickness setting method (Sensorless method)

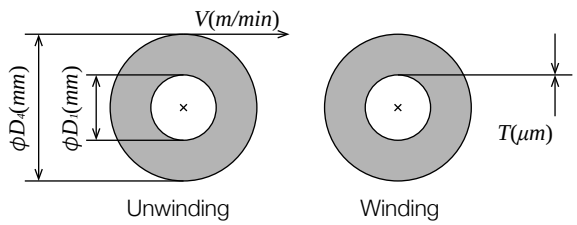

D_1 = Minimum diameter (mm) $D=\sqrt{D_1^2+4TVt/\pi}$ ···Winding

D_4 = Maximum diameter (mm) $D=\sqrt{D_4^2-4TVt/\pi}$ ···Unwinding

t = Operation time (min)

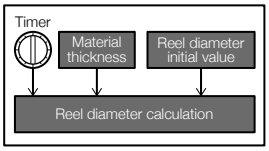

In this method, the reel diameter changing in accordance with the lapse of time is calculated from the material thickness set value and average speed value.

The left expression shows the reel diameter D (mm) when the material having the thickness T (μm) is wound and unwound at the line speed V (m/min).

When the minimum diameter D_1 (for winding) or maximum diameter D_4 (for unwinding) is set as the initial value and the material thickness T and average speed V are set, the change in reel diameter D with lapse of time can be automatically calculated using the left expression.
This method is called "speed & thickness setting method".

● Ratio calculation method

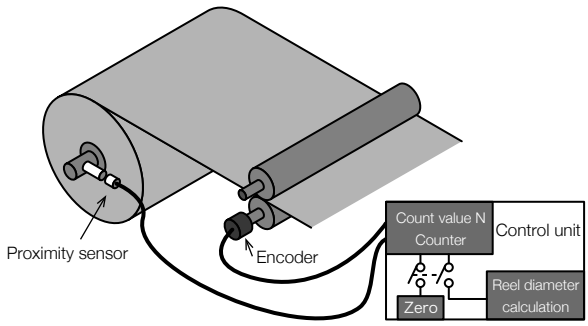

In this method, two sensors, the proximity switch attached to the reel shaft and the rotary encoder detecting the rotation speed of the feed roll, are used.

In this method, the reel diameter is calculated by counting the pulse number of the rotary encoder per rotation of the reel shaft by utilizing the fact that the rotation cycle of the reel increases as the reel diameter increases and the pulse number of the rotary encoder installed in the feed roll having a constant diameter does not change provided the speed is constant.
Because errors caused by changes in the material thickness due to elongation of the material and involvement of the air are not generated, the reel diameter can be calculated with higher accuracy compared with the integrated thickness monitoring method provided slip does not occur between the feed roll and the material.

- ◆ The reel diameter can be calculated with high accuracy.
- ◆ The resolution of the reel diameter calculation is determined by the pulse number of the encoder.
- ◆ Accurate calculation of the reel diameter is possible only after the reel shaft rotates twice.

4-3 Closed-loop control

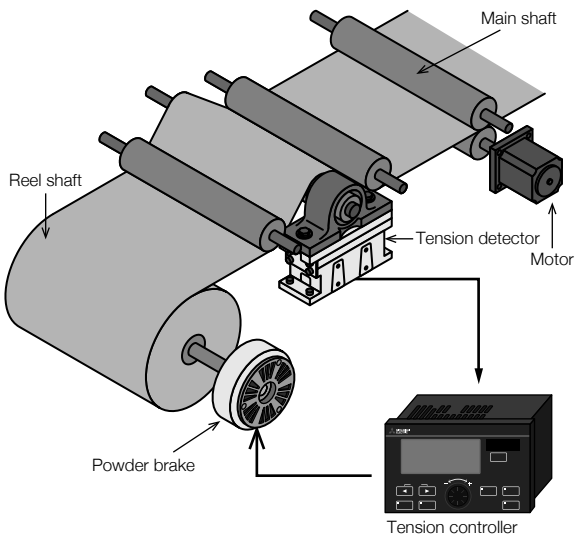

In the closed-loop control method, which is also called the tension feedback method, the material tension is directly monitored by the tension detector, and the monitored value is fed back so that the monitored value becomes equivalent to the tension control target value.

Though accurate tension equivalent to the target value is obtained, the phenomenon of "hunting" easily occurs due to short-time disturbances. To cope with this, proportional integral control is generally performed.

Because the tension is fed back, the tension accuracy is better than that of open loop control.

[Advantages]

- ◆ The control accuracy is high.
- ◆ The controlled tension can be read directly.
- ◆ The torque characteristics of the actuator are also corrected.

[Disadvantages]

- ◆ The control is susceptible to short-time disturbances.
- ◆ The initial cost of introduction is large.
- ◆ It is necessary to coordinate the machine manipulation and control.

Applicable equipment

Tension controller
LE7-40GU-L

Closed-loop tension controller
LE-10WTA-CCL

Point!

Classification of tension control methods

The tension control methods of powder clutches/brakes are mainly classified into the following three types:

- Manual control ····· The material tension is adjusted by human senses.
- Open-loop control ····· Controlled torque in proportion to the reel diameter is generated.
- Closed-loop control ····· The tension is detected by the sensor, and then controlled so that it matches the target value.

MEMO

Chapter 5

What Is a Tension Detector?

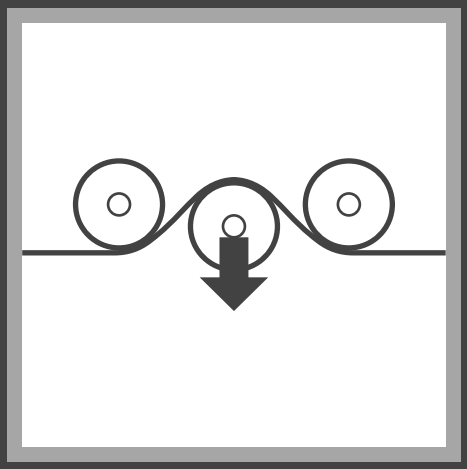

5-1 What is a tension detector?
5-2 Types and features of tension detectors
5-3 Selection of tension detectors
5-4 Tension and load
5-5 Cautions on attaching the tension detector

Chapter 5 What Is a Tension Detector?

5-1 What is a tension detector?

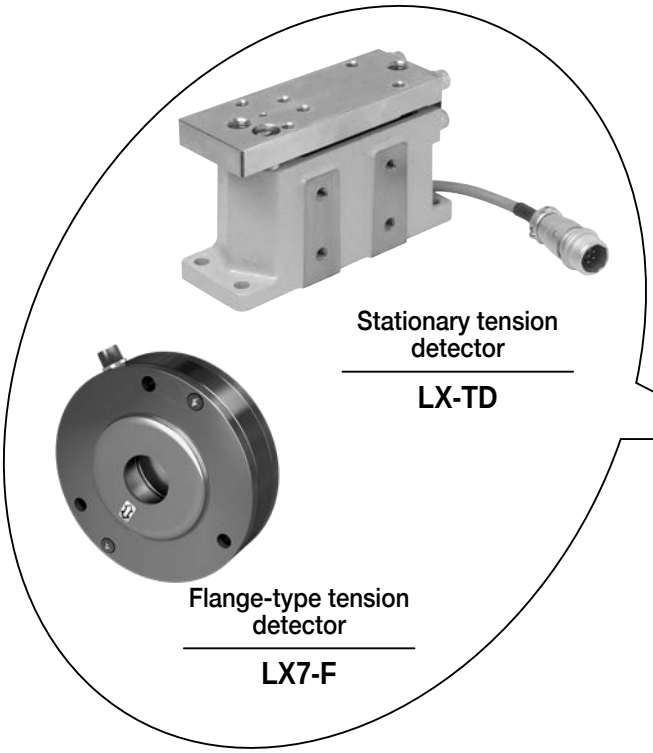

A tension detector is a device which converts tension into load once, and uses the load as an electrical signal.
A detection roller is installed above the tension detector and guide rollers are installed before and after the tension detector, and the material passes through each roller. By this setup, the tension applied to the material is applied as load on the tension detector via the detection roller.

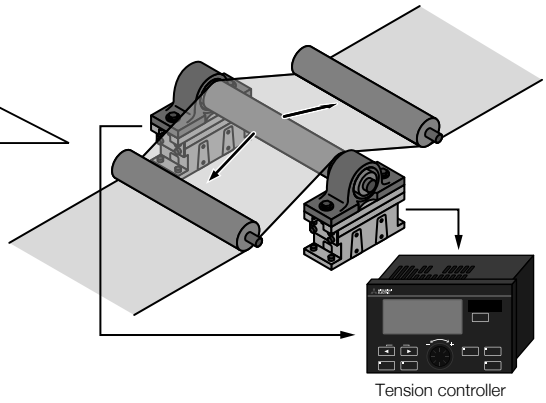

The internal flat spring bends in accordance with the load applied to the tension detector, and the load is output as an electrical signal by the differential transformer.

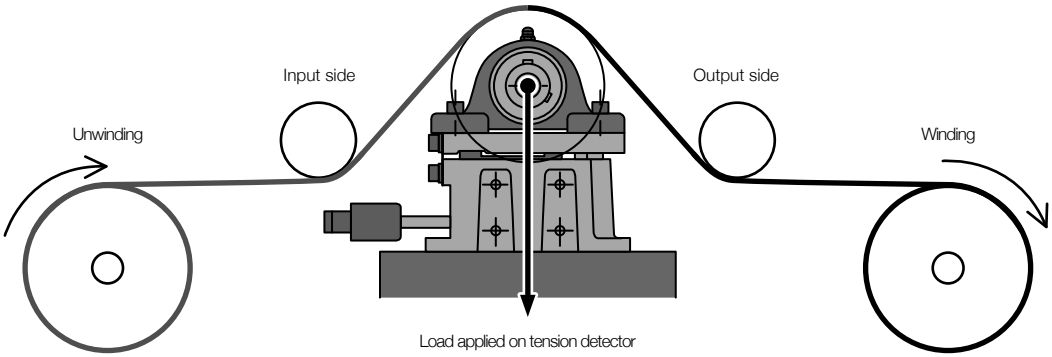

5-2 Types and features of tension detectors

● Differential transformer type

The LX-TD and LX7-F tension detectors manufactured by Mitsubishi Electric Corporation use a differential transformer.

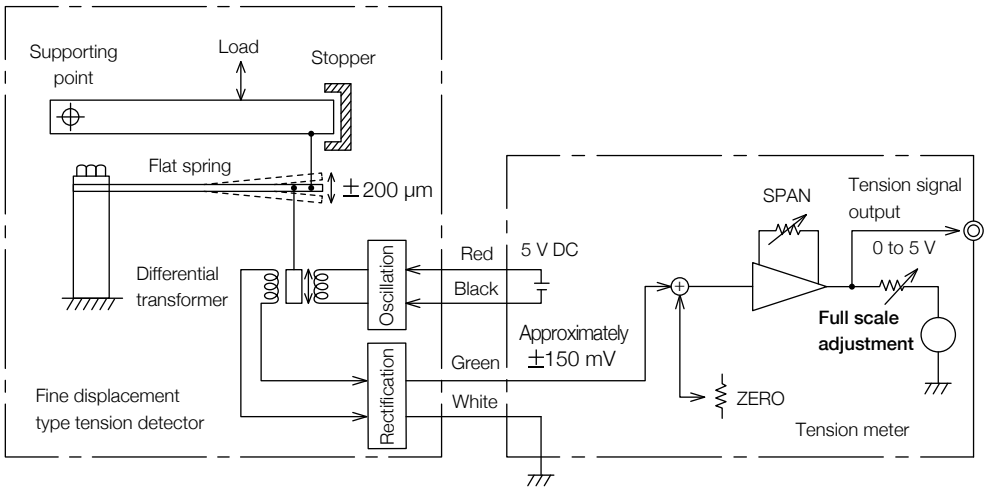

[Features of differential transformer type]

- The sensor section does not contact the detection target, and is highly resistant to shock.
- Because the output voltage is high, this type of sensor is highly resistant to electrical shock compared with other types of sensors.
- Fewer errors are generated during amplification.
- Correction is required against temperature changes.

● Other types

◇ Strain gauge type

- The structure is simple because the sensor can be directly pasted to the spring.
- The output voltage is small.
- Correction is required against temperature changes.
- This type is susceptible to humidity.

◇ Pressductor®

- The load can be detected even if the displacement is small.
- This product is suitable for high tension.
- The amplifier circuit is complicated.
- The price is high.

◇ Magnetostriction type

- The sensor section does not contact the detection target, and is highly resistant to shock.
- Correction is required against temperature changes.
- The response speed is slow.
- The amplifier circuit is complicated.

5-3 Selection of tension detectors

■ 5-3-1 How to select a tension detector

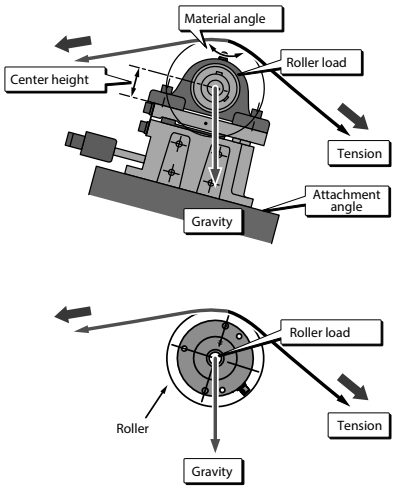

The following conditions should be examined in order to select a proper tension detector:

◆ Tension detector types
- Stationary type
- Flange type

◆ Range of tension usage

◆ Weight of the tension detection roller

◆ Tension detector attachment angle

◆ Input/output material angle

◆ Center height of the pillow block (Stationary type only)

● Load caused by the material angle and tension

(1)

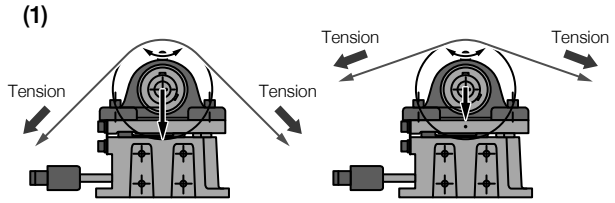

Figure (1) shows that the load applied to the tension detector differs with a change of material angle even if the tension is the same.
Because the load applied to the tension detector varies depending on several conditions including the material angle even if the tension is the same, it is necessary to select a proper tension detector in accordance with the existing conditions.

● Load caused by the tension detection roller and load caused by the tension

(2)

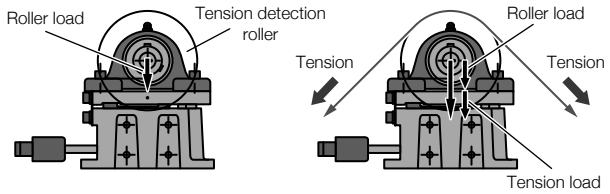

The loads applied to the tension detector can be classified into the following two types as shown in Figure (2):
- Load caused by the tension detection roller: Roller load
- Load caused by the tension: Tension load

A proper tension detector can be selected by calculating the above two loads.

● Load caused by the tension detection roller

(3)

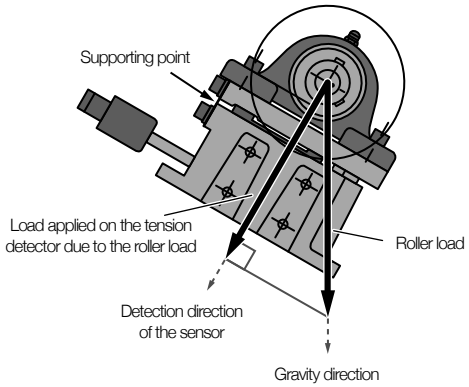

Because the tension detector detects the load around the supporting point as described above, the roller load detected by the tension detector differs with a change of tension detector attachment angle as shown in Figure (3).

● Effect of the center height (Stationary type)

(4)

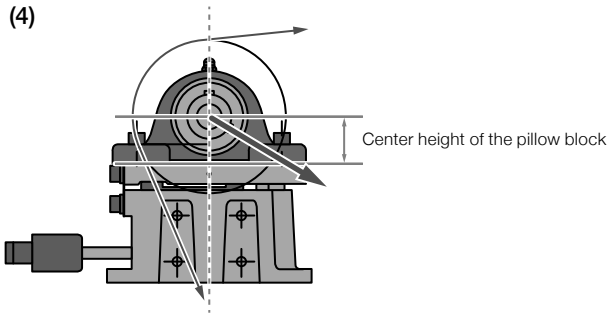

A pillow block (bearing) is used to connect the tension detector and tension detection roller as shown in Figure (4). The height of the pillow block (bearing) is called the "center height". The tension load detectable by the tension detector varies depending on the center height.

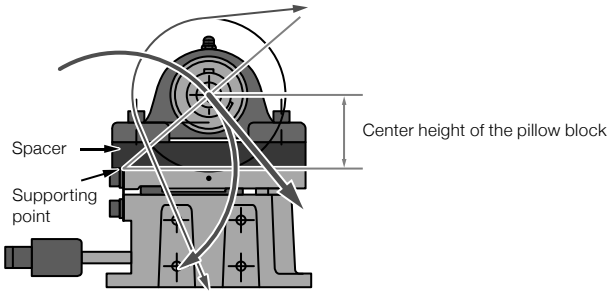

When the center height changes, the distance between the "supporting point of the tension detector" and the "center of the tension detection roller" changes accordingly.
In the same way as the principle of leverage, the tension load detectable by the tension detector changes even if the tension is the same.

5-4 Tension and load

■ 5-4-1 Load direction and detection direction

(1)

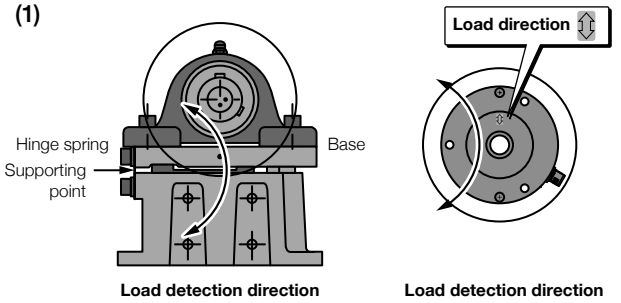

Figure (1) shows the relationship between the tension and the load applied to the tension detector. The tension detector uses the center of the hinge spring as the supporting point, and detects the load in the rotation direction whose center is the supporting point.
Because the amount of deflection of the base is extremely small, the load detection direction can be effectively regarded as perpendicular to the tension detector.

(2)

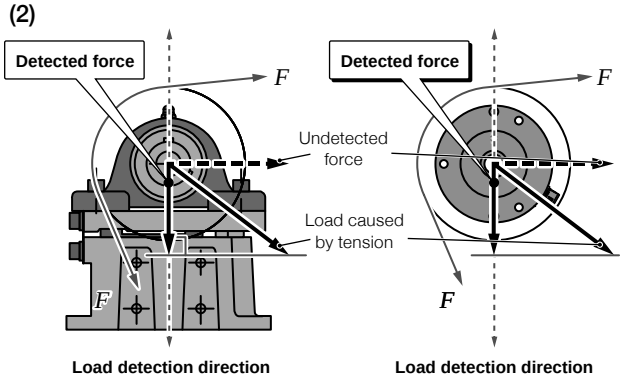

When the tension is applied as shown in Figure (2), the load is applied in the arrow direction due to the tension.
However, the tension detector actually detects only the force in the vertical direction as the load, and does not detect the force in the horizontal direction.
As described above, loads applied to the tension detector can be classified into "detected force" and "undetected force".

● Load direction and detection direction

(3)

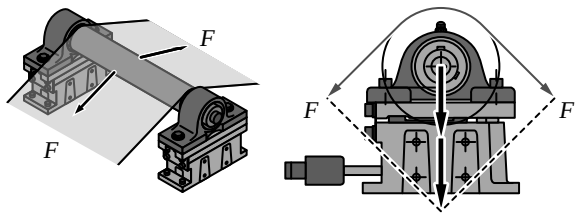

The tension is applied in two directions, on the input side and on the output side, as shown in Figure (3) and Figure (4).
The sum of both forces is applied as the load on the tension detector.
When two tension detectors are used as shown in Figure (3) and Figure (4), the applied load is "(Load caused by tension on input side + Load caused by tension on output side)/2".

(4)

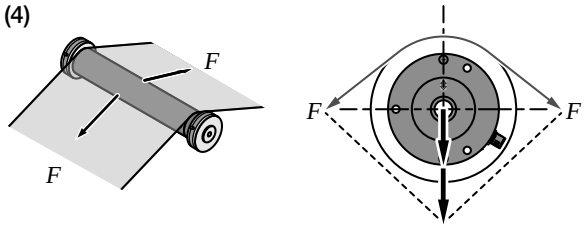

5-5 Cautions on attaching the tension detector

■ 5-5-1 How to attach the tension detector (Stationary type)

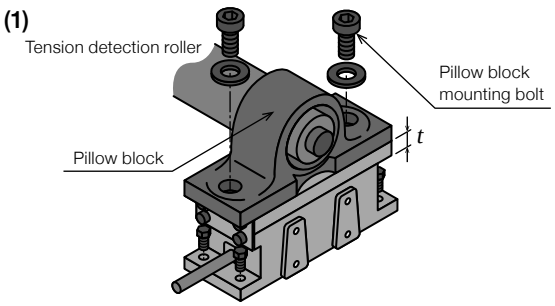

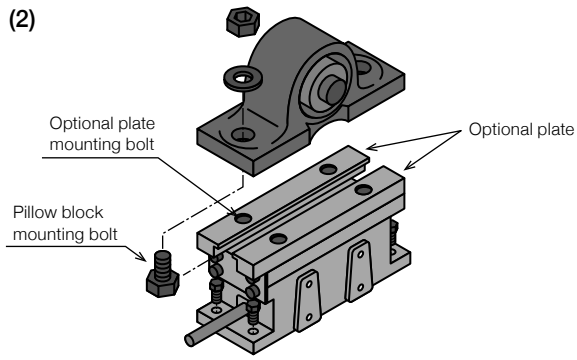

Because the tension detector is highly sensitive equipment manufactured by precise processing and assembly, care is required when attaching it.

(1) Attachment using the standard pillow block

The pillow block and pillow block mounting bolts are not provided as standard accessories.
Make sure that the length of the pillow block mounting bolts does not exceed the thickness "t" of the mounting base on the tension detector side.
If the length of the bolts exceeds "t", the bolts will touch the inside of the tension detector, may hinder accurate detection, and may cause a failure.

(2) Attachment using the optional plate

The pillow block and pillow block mounting bolts are not provided as standard accessories.
The optional plate mounting bolts are provided as accessories with the optional plate.

● Using the automatic aligning pillow block

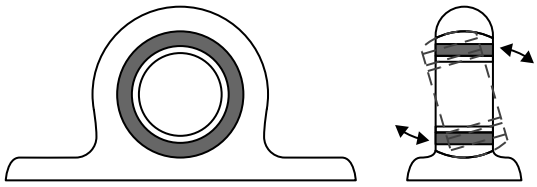

Automatic aligning pillow block

Make sure to use the automatic aligning pillow block as the bearing so that machining errors including imbalanced tension detection roller and non-parallel sensor mounting face and changes in the roller length caused by temperature changes are not detected as the tension.
The automatic aligning pillow block can mitigate the stress caused by the inclination of the tension detection roller and the effect of deviated material path and uneven thickness.

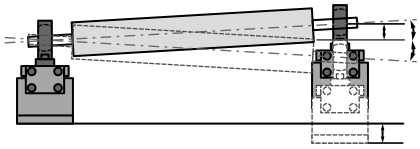

Inclination of the tension detection roller

The pillow block can mitigate the stress caused by the inclination of the tension detection roller.

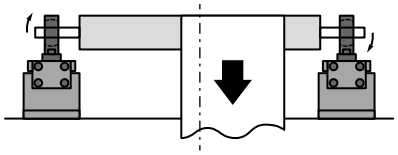

Deviated material path

The pillow block can mitigate the effect of deviated material path (when the edge position control is used) and of uneven thickness.

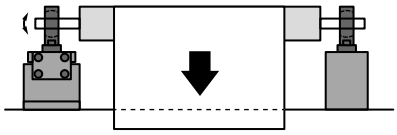

Only one tension detector

The pillow block can mitigate the effect of the inclination of the tension detection roller when only one tension detector is used.

■ 5-5-2 How to attach the tension detector (Flange type)

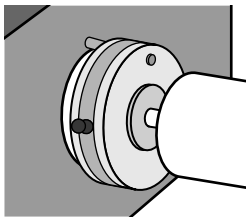

Attaching to the inside of the machine frame

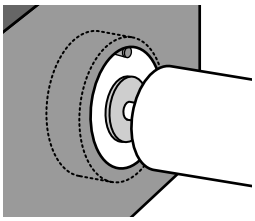

Attaching to the outside of the machine frame

The flange type tension detector can be attached in the following two ways.

◆ When attaching to the inside of the machine frame

◆ When attaching to the outside of the machine frame

● When attaching to the inside of the machine frame

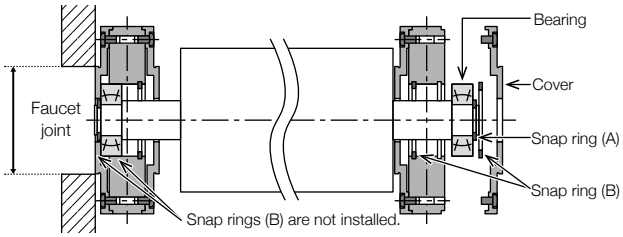

By attaching to the inside of the machine frame, the projection on the outside of the machine frame can be eliminated (decreased). This reduces restrictions such as on the installation location of the machine. Also, the machine frame can be kept narrow.

● When attaching to the outside of the machine frame

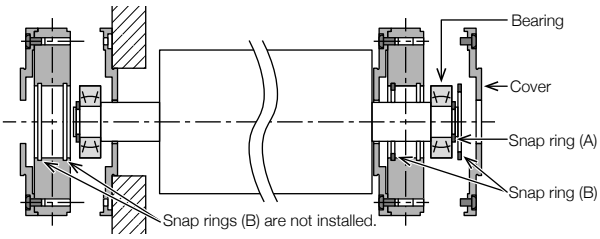

By attaching to the outside of the machine frame, it becomes easy to install and maintain the detector.

■ 5-5-3 Cautions on attaching the tension detector

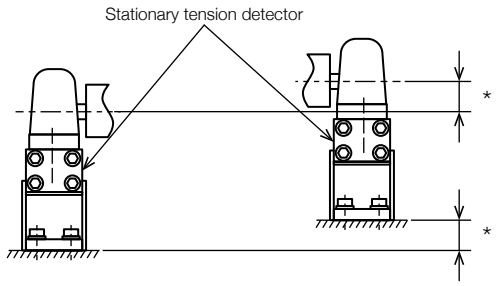

When supporting the tension detection roller at both ends, align the height of the tension detector mounting face. Minimize the dimension marked with "*" to reduce the tension detection error.
If the dimension marked with "*" is large, the material may meander, the bearing life may be shortened, and the zero-point output may change.
When using the spacer for aligning the height, make sure that the shape of the spacer can cover the entire mounting face.

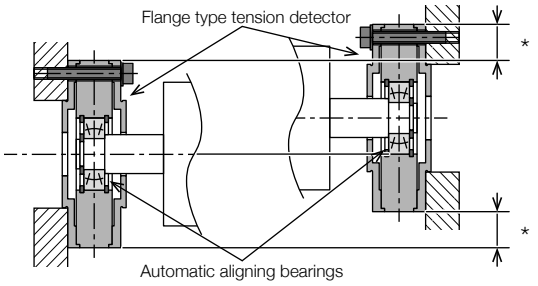

For the flange type tension detector, be sure to use self-aligning bearings. Using the automatic aligning bearings can mitigate the stress caused by the inclination of the tension detection roller and the effects of deviated material path and uneven thickness.

● When using in an environment with large temperature changes

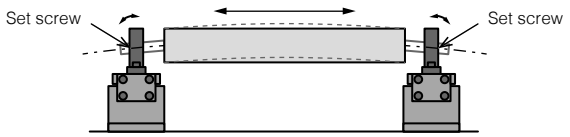

Elongation/shrinkage of the tension detection roller

The effect of elongation/shrinkage of the tension detection roller caused by changes in the ambient temperature can be mitigated.

When using the tension detector in an environment with large temperature changes, install a mechanism to absorb changes in the tension detection roller length caused by temperature changes so that the tension detection accuracy is not affected.
For example, the effect of elongation/shrinkage of the tension detection roller can be mitigated by loosening only one set screw used to fix the tension detection roller shaft in the bearing inner ring.

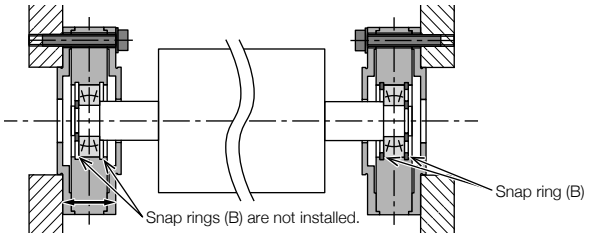

In the case of the flange type tension detector, attaching the snap ring (B) only to the tension detector on the right side enables the tension detector on the left side to slide without being fixed in the left and right directions, thus relieving the effect of expansion and contraction of the tension detection roller due to changes in the ambient temperature.

Point! LX-TD tension detector

When the material is wide, use two LX-TD tension detectors in total, one at each end of the tension detection roller, so that the tension across the full width can be detected accurately even if the material is stretched on only one side.
Only one LX-TD tension detector may be installed on either side when the material is not stretched on one side. Use two LX7-F tension detectors in total, one at each end.

● Usage precautions

LX7-F flange-type tension detector is a precision device.
Especially, the sensor part can be damaged by impact or disassembly. Please handle with care.

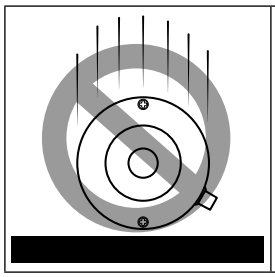

Do not drop the tension detector.

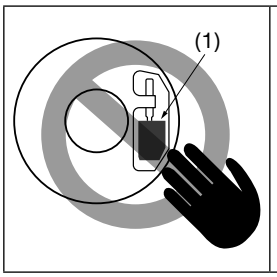

Do not touch or press the sensor part (1).

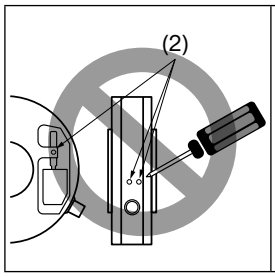

Do not loosen the sensor mounting screw (2).

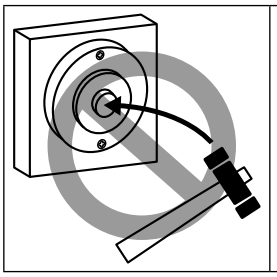

Do not hit the tension detector when installing the tension detector to the device and when installing bearing/shaft to the tension detector.

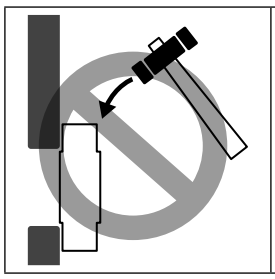

Do not hit the tension detector when performing centering adjustment.

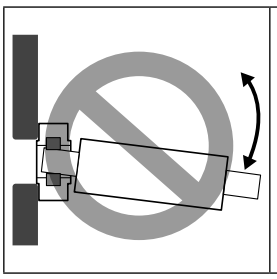

Do not pry the shaft.

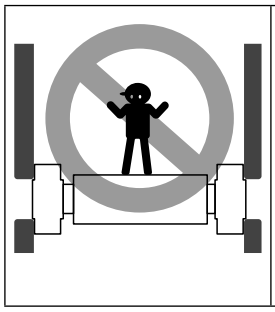

Do not apply a load which exceeds the maximum load (200% of rated load) when installing and arranging the tension detector.
Do not use the tension detection roller as a foothold while working.

Chapter 6

Actuator

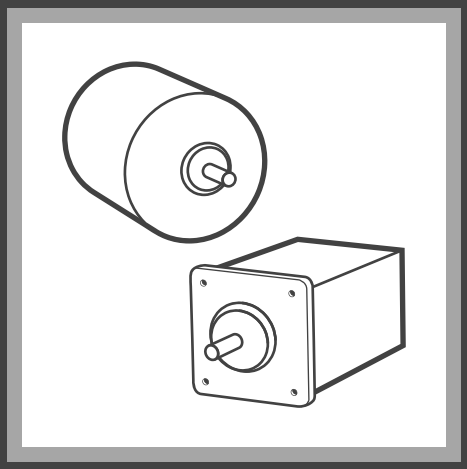

6-1 Types and features of actuators
6-2 Powder clutch/brake
6-3 AC servo motor and inverter/motor
6-4 Air clutches/brakes (manufactured by other companies)
6-5 Differences between control using motors and control using powder
6-6 Actuator selection flow
6-7 Selecting an actuator

Chapter 6 Actuator

Motors, clutches, brakes, etc. which move machines are called actuators.

6-1 Types and features of actuators

Because each actuator has advantages and disadvantages, it is necessary to select proper actuators in accordance with the purpose.

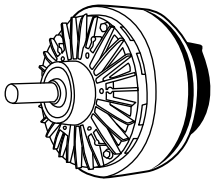

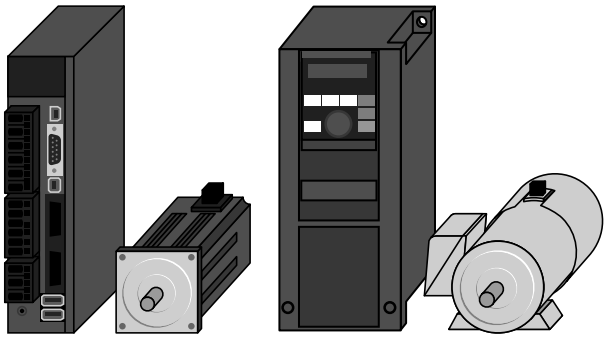

Item / Type	Powder clutch/brake	Air clutch/brake	AC servo motor	Inverter (Vector control)
Torque linearity	3	3	4	4
Torque reproducibility	3	2	4	4
Torque control range	4 (1 to 100%)	3 (5 to 100%)	4 (1 to 100%)	3 (2 to 100%)
Life	3 (Powder)	2 (Pad)	4	4
Installation cost	4	4	1	2
Line speed	Low to medium	High	High	Medium to high

1 Strongly disagree
2
3
4 Strongly agree

6-2 Powder clutch/brake

■ 6-2-1 Structure of clutch/brake

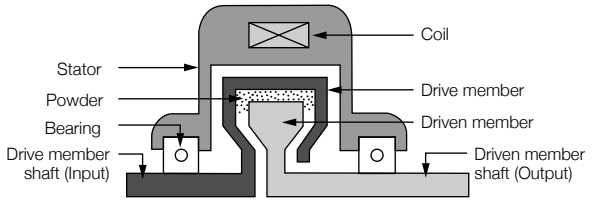

The torque is not transmitted while the current is OFF.

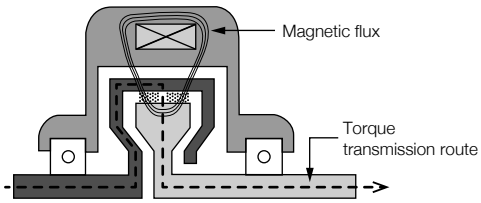

Powders are connected in a chain state along the magnetic flux and the torque is transmitted while the current is ON.

This subsection explains the types and features of actuators used in tension control.

Powder clutches/brakes are the most common actuators used for tension control.
The left figure shows their principle of operation. Powder (magnetic iron powder) is filled between the drive member and the driven member.
When the excitation coil applies magnetism to the powder, the torque is transmitted between the drive member and the driven member, and the equipment works as a clutch.
When the driven member is fixed, the equipment works as a brake.

[Features]
[1] The torque is proportional to the excitation current.
[2] Continuous slip operation is available, and the torque does not change even if the slip rotation speed changes.

Applicable equipment

Powder clutch
ZKB-BN

Powder brake
ZKB-XN

■ 6-2-2 Cautions on using powder clutches/brakes

[Installation]

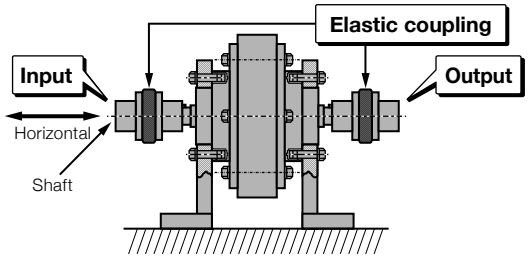

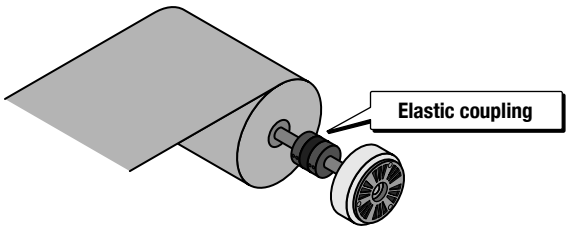

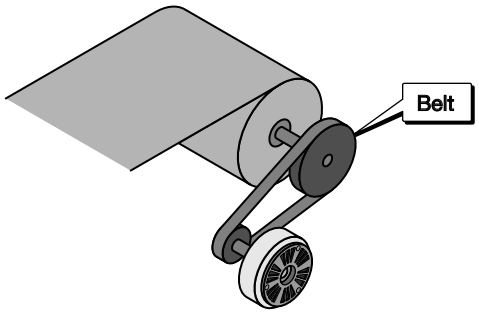

- **Using the high-speed rotation side as the input side**

Use the powder clutch in the regular installation status in which the high-speed rotation side is set as the input side. It is not recommended to use the powder clutch in the reverse installation status for continuous idling because the torque characteristics may deteriorate and the powder life may be shortened.

- **How to connect the input shaft and output shaft of the powder clutch/brake**

There are mainly two methods to connect the powder clutch/brake shaft and load shaft: the method using a coupling and the method using a belt and chain.
In the connection method using a coupling, use an elastic coupling, and make sure that the concentricity and squareness between the two shafts meet the values allowed for the elastic coupling that is used.
In the connection method using a belt and chain, make sure that the load applied to the shaft is less than the allowable shaft load determined in accordance with the shaft strength and allowable radial load of the bearing.
Refer to the corresponding catalog for the allowable shaft load.

[Running-in operation]

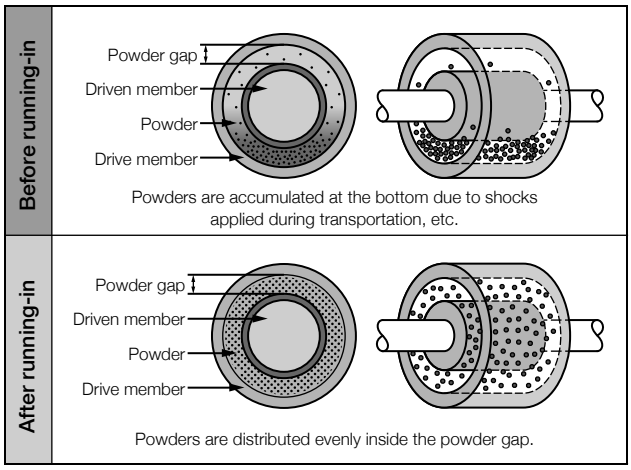

Powder inside the powder clutch/brake is distributed unevenly due to shocks applied during transportation, etc. Perform the running-in operation before starting regular operation.

To attain the original performance of the powder clutch/brake, it is important that the powder is distributed evenly inside the powder gap.
If powder is distributed unevenly, the torque may become lower, fluctuate or become uneven. As a result, the powder clutch/brake cannot deliver its original performance.

The running-in operation makes unevenly distributed powder distributed evenly inside the powder gap to generate stable torque in proportion to the excitation current.
Refer to the corresponding catalog or instruction manual for the running-in operation procedure.

[Simple torque measurement method]

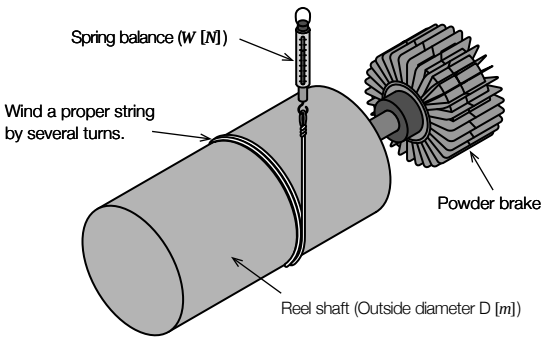

Read the value indicated by the spring balance while pulling up the spring balance at a constant speed as shown in the left figure.
(Measure the torque during rotation in the power-on status after the running-in operation.)

$$\text{Torque}(T)=W\times\frac{D}{2}\ [Nm]$$

[Idling torque]

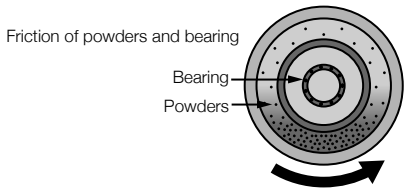

Even if the excitation current is shut down completely, idling torque is generated in the powder clutch/brake due to the magnetism remaining in components and the friction of the powder and bearing.
Torque control is available at a torque larger than the idling torque. Refer to the corresponding catalog for the idling torque shown for each model.

Idling torque ≤ Available torque ≤ Rated torque

[Minimum rotation speed]

● If the rotation speed is low

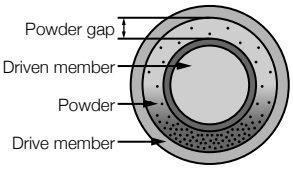

● If the rotation speed is high

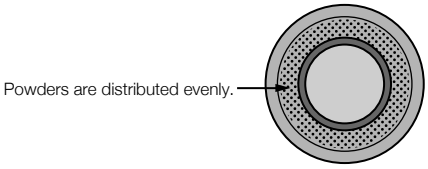

The minimum rotation speed required for operation is determined in the powder clutch/brake. In the powder brake, the minimum rotation speed is 15 r/min. In the powder clutch, the minimum difference in the rotation speed between the input and the output is 15 r/min.
(This means that both the powder clutch and the powder brake require a slip rotation speed of 15 r/min or more.)
If the slipping rotation speed is low, internal powder may be distributed unevenly and stable torque performance may not be obtained, or a considerable time may be required until the prescribed torque is achieved at startup.
The ZKB, ZKG and ZX type powder clutches/brakes can be used when the slip rotation speed becomes approximately 5 r/min.

Powder brakes	The rotation speed should be 15 *r/min* or more.
Powder clutches	The difference in the rotation speed between the input and the output should be 15 *r/min* or more.

[Moisture absorption of powder]

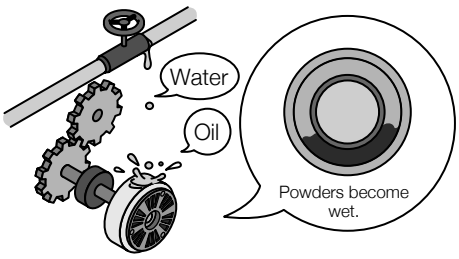

The performance of the powder clutch/brake may be unstable if the powder becomes wet. Take care to ensure that water, oil, etc. does not enter the inside.
Especially when the powder clutch/brake is installed near the gear box, oil may enter the inside via the shaft. Perform complete sealing.
Because the powder clutch/brake does not have a sealed structure, it cannot be used in an environment in which it is directly exposed to oil mist, oil or water.

6-3 AC servo motor and inverter/motor

■ 6-3-1 What are an AC servo motor and inverter/motor?

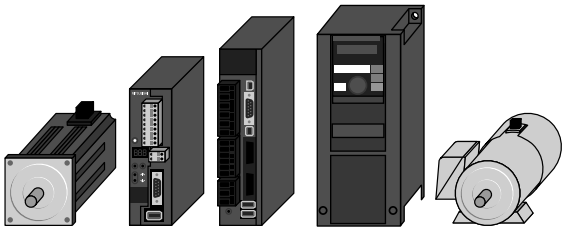

The Mitsubishi Electric MELSERVO-J4 Series AC servo motors and FR-A800 Series general-purpose inverters can be operated in torque control mode to perform winding and unwinding.
In torque control mode, servo motors and inverters/motors are controlled so that a torque proportional to the command input is obtained. Accordingly, it is possible to obtain a constant tension by giving the command input in proportion to the reel diameter.

◇ What is an AC servo motor?
A servo motor is a motor controlled so as to comply faithfully with commands.

- Commands refer to the position (motor rotation angle), rotation speed and rotation force (torque).
- The motor status in response to a command is fed back and controlled.
- A servo motor having a synchronous motor is called an AC servo motor in Mitsubishi Electric Corporation.
- An AC servo motor is a kind of inverter in a broad sense.

◇ What is an inverter?
An inverter is a device used to convert frequency.

- An inverter for motor control refers to a device which changes the power frequency of a motor (generally, an induction motor) to change the rotation speed of the motor.
- Each manufacturer generally classifies inverters into several ranks by the motor control function.

◇What is an inverter (vector control)?
An inverter (vector control) refers to an induction motor combined with an encoder for detecting the position/rotation speed and a cooling fan.

- Inverters (vector control) can control the position (motor rotation angle), rotation speed and rotation force (torque).
- Inverters (vector control) can achieve higher-quality control than general-purpose inverters for motor control though the accuracy is lower than that of AC servo motors.
- In tension control, inverters (vector control) offer higher stability of rotation speed because the inertia inside the motor is larger than that of AC servo motors.
- Inverters (vector control) offer smoother transition between the power running torque region and the regenerative torque region than AC servo motors.

Applicable equipment

AC servo motor
MELSERVO-J4

Inverter
(for vector control)
FR-A800

■ 6-3-2 Cautions on using the AC servo motor and inverter (vector control)/motor

[1] The nominal motor output is determined by the rated rotation speed and output torque in continuous operation at the rated rotation speed.
Large torque is required at the maximum reel diameter in winding and rewinding, and the rotation speed becomes high at the minimum reel diameter. This means that a large-capacity motor is required when the reel diameter ratio (ratio between the maximum reel diameter and the minimum reel diameter) is high.
However, the motor capacity can be reduced in some cases by utilizing the constant output area. For winding and unwinding, a vector motor that can take a wide constant output area is effective.

[2] For tension control, the rated torque, not the short-time maximum torque, should be examined in the motor.

[3] Compared with the AC servo motor, the start-up delay of the motor during winding control of low tension and small reel diameter may be a problem. Care must be taken when selecting the capacity and gear ratio in winding control with large torque ratio (maximum reel diameter/ minimum reel diameter × maximum tension/minimum tension).

[4] AC servo motors are generally suitable for use at high rotation speed. Their output torque is extremely small compared with powder clutches/brakes, and speed reducers are required to drive the reel shaft. If the gear ratio of the speed reducers is too high, accurate tension control cannot be achieved.

[5] When the torque command crosses the regenerative area and power running area, AC servo motors are not suitable for control requiring high accuracy because the torque linearity is not good.

[6] AC servo motors are not suitable for use at low speed because cogging torque is generated in the low-speed area.

[7] In AC servo motors, the recommended value of the load inertia moment ratio is determined for winding and unwinding against the inertia moment of motors.
Refer to the corresponding catalog for details.

●AC servo motor

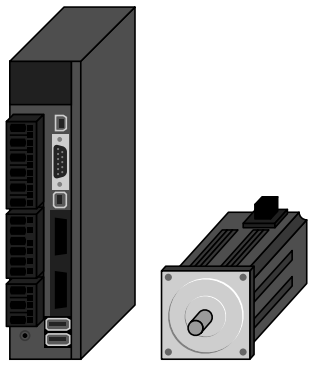

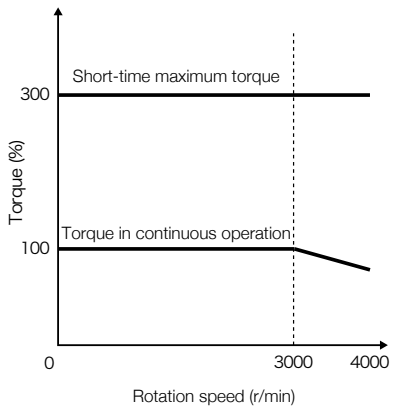

●Inverter/motor

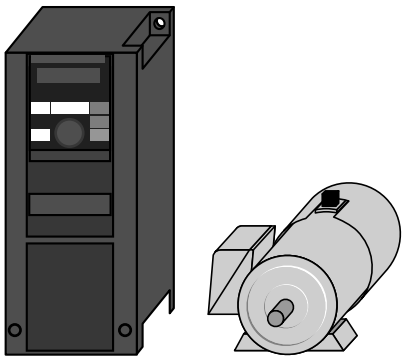

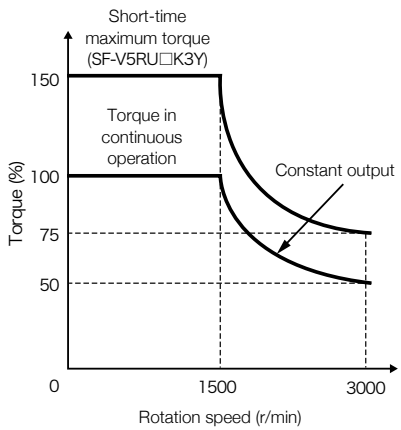

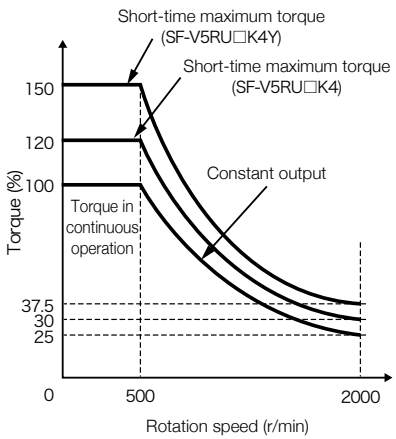

6-4 Air clutches/brakes (manufactured by other companies)

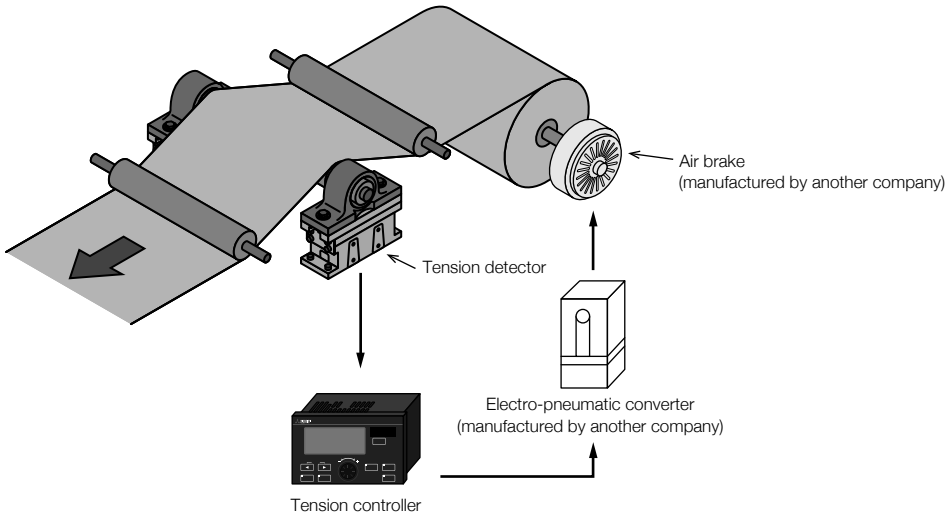

Air clutches/brakes (manufactured by other companies) transmit the torque by pressing the friction plate with air. Air clutches/brakes are used for winding and unwinding with relatively large torque and heat capacity compared with powder clutches/brakes. In this case, a Mitsubishi Electric tension controller can be used via an electro-pneumatic converter.

[Features]

- The torque is almost proportional to the air pressure.
- The torque can be changed by changing the number of calipers.
- The torque changes in accordance with the slip rotation speed.
- Friction powder is generated from the calipers and disc.

6-5 Differences between control using motors and control using powder

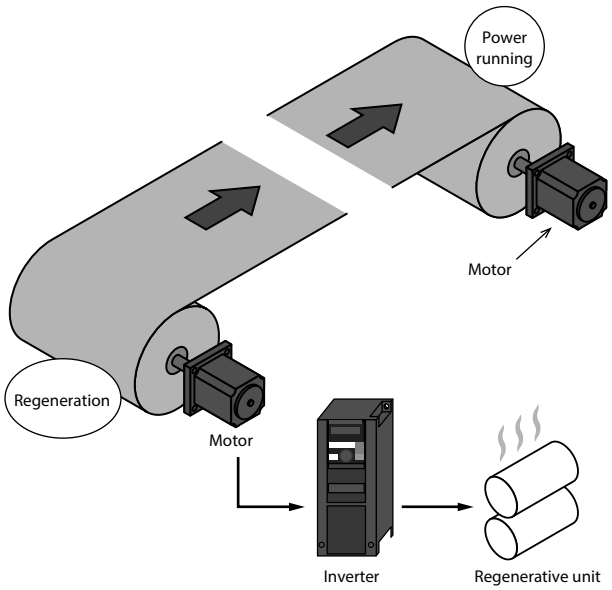

• Control using motors

Motors are used on the side rotating the load (power running side) and the side rotated by the load (regenerative side).
When motors are used for winding and unwinding:
Winding side: Side rotating the load (power running side)
Unwinding side: Side rotated by the load (regenerative side)
On the regenerative side, the motor works as a generator, and generates electrical energy. Because the generated electrical energy returns to the AC servo amplifier or inverter, it is necessary to release it by returning it to heat or power. The regenerative unit or regenerative converter is used for this purpose.

[Rotation speed]

When driving the motor with an inverter, the torque may be insufficient if the rotation speed is low, so the tendency is to increase the gear ratio.
However, if the gear ratio is too high, mechanical loss and torque fluctuation may increase.
In the AC servo motor, torque ripple (torque unevenness) is generated due to the switching of the motor magnetic pole at low rotation speed.
Motors are not perfect, and it is necessary to select a proper actuator in accordance with the usage conditions.

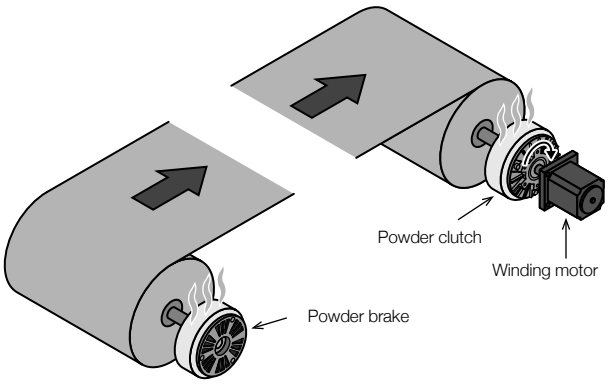

• Control using powder

[Powder clutch and powder brake]

The clutch is generally used for winding in combination with a motor.
The clutch is sometimes used for unwinding in combination with a reverse rotation motor when the line speed is low.
The clutch transmits the motor power to the load shaft, or shuts down the motor power.
One of the features of the powder clutch is that it can transmit power while slipping. Accordingly, the powder clutch can make the rotation speed extremely low or zero on the load shaft side, which cannot be achieved by control using motors.
However, slip changes into heat energy and generates heat.
The brake applies braking to the power of the load shaft.
Because the powder brake applies braking with slipping, slip changes into heat energy and generates heat.
The generated heat reduces the powder life. In addition, it is necessary to observe the restriction on heat generation (allowable heat dissipation).

6-6 Actuator selection flow

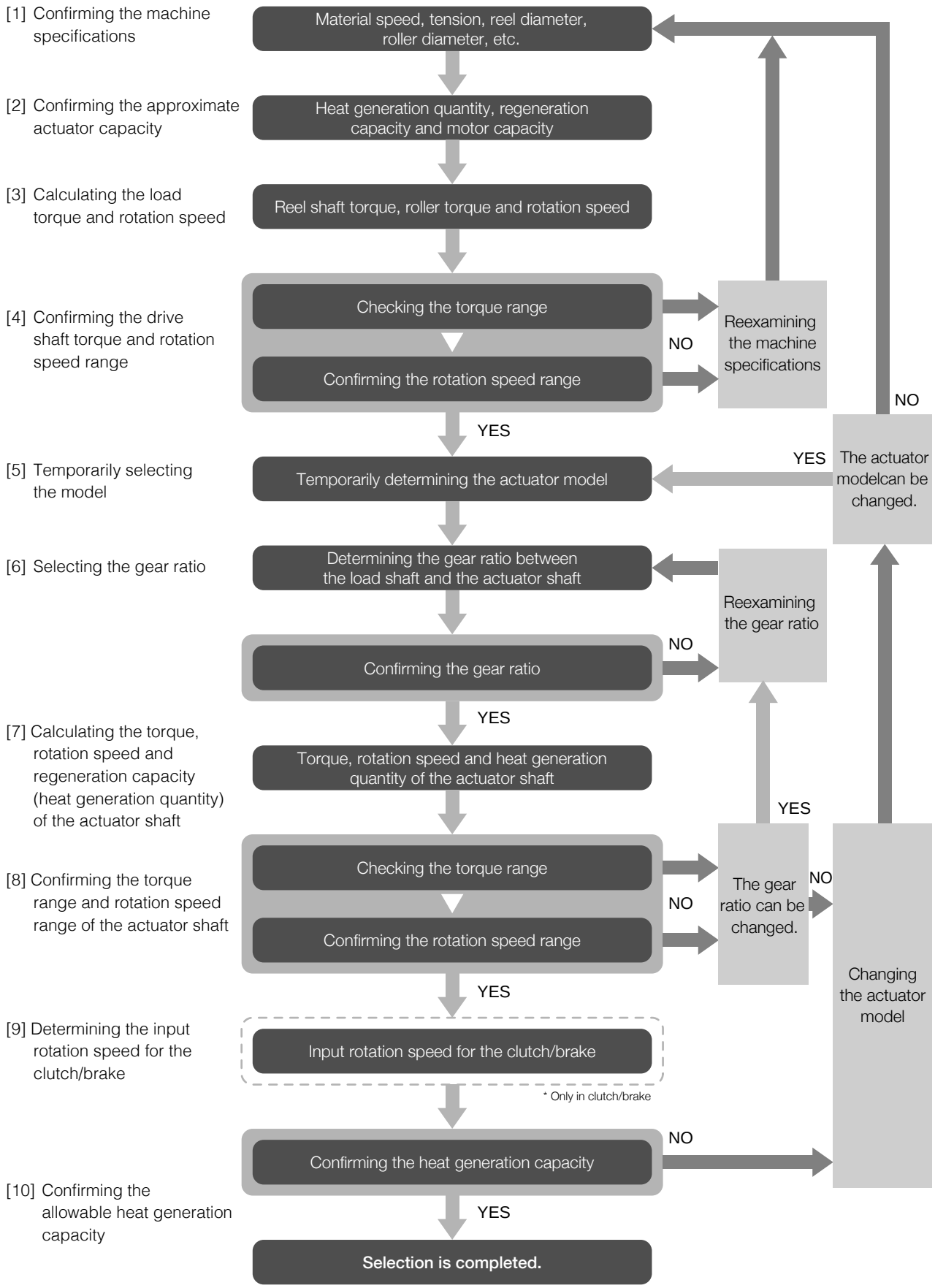

The above figure shows the flow of selecting an actuator.
First, confirm the machine specifications, and calculate the approximate capacity of the actuator. Next, temporarily select the model in accordance with the load shaft, torque and rotation speed. Finally, set the gear ratio, and confirm that the torque, rotation speed and capacity of the actuator shaft are acceptable.

6-7 Selecting an actuator

■ 6-7-1 Powder brake for unwinding

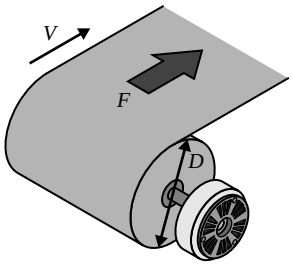

Usage conditions	
Tension (F)	40 to 80 N
Reel diameter (D)	75 to 250 mm
Line speed (V)	5 to 15 m/min
Reduction ratio	1

This subsection shows a calculation example of a powder brake for unwinding.
Calculate the torque, rotation speed and heat dissipation based on the usage conditions.
The maximum value and minimum value of the braking torque required at the start and end of unwinding can be obtained as follows:

$$Tmax = \frac{Dmax}{2} \times Fmax = \frac{0.25}{2} \times 80 = 10\ Nm$$

$$Tmin = \frac{Dmin}{2} \times Fmin = \frac{0.075}{2} \times 40 = 1.5\ Nm$$

The maximum value and minimum value of the rotation speed can be obtained as follows:

$$Nmax = \frac{Vmax}{(\pi \times Dmin)} = \frac{15}{(\pi \times 0.075)} = 63.7\ r/min$$

$$Nmin = \frac{Vmin}{(\pi \times Dmax)} = \frac{5}{(\pi \times 0.25)} = 6.4\ r/min$$

The heat dissipation can be obtained as follows:

$$P = 0.105 \times T \times N = 0.0167 \times F \times V = 0.0167 \times 80 \times 15 = 20\ W$$

Select a proper powder brake model based on the above calculation results.
Select a model such that the torque, rotation speed and heat dissipation do not exceed the allowable values.
In these conditions, the model ZKB-1.2XN is available.

■ 6-7-2 Powder clutch for winding

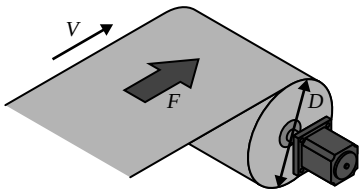

Usage conditions	
Tension (F)	40 to 80 N
Reel diameter (D)	75 to 250 mm
Line speed (V)	5 to 15 m/min
Reduction ratio	1

This subsection shows a calculation example of a powder clutch for winding.
Calculate the torque, rotation speed and heat dissipation based on the usage conditions.
The maximum value and minimum value of the clutch torque required at the start and end of winding can be obtained as follows:

$$Tmax = \frac{Dmax}{2} \times Fmax = \frac{0.25}{2} \times 80 = 10\ Nm$$

$$Tmin = \frac{Dmin}{2} \times Fmin = \frac{0.075}{2} \times 40 = 1.5\ Nm$$

The maximum value and minimum value of the rotation speed on the output side can be obtained as follows:

$$Nomax = \frac{Vmax}{(\pi \times Dmin)} = \frac{15}{(\pi \times 0.075)} = 63.7\ r/min$$

$$Nomin = \frac{Vmin}{(\pi \times Dmax)} = \frac{5}{(\pi \times 0.25)} = 6.4\ r/min$$

In clutches, the rotation speed Ni on the "heat dissipation" input side should be considered also and calculated as follows:

$$Ni = Nomax + 15 = 78.7\ r/min \text{ (Temporarily)}$$
$$\rightarrow 90\ r/min \text{ (Reduction ratio 1/20)}$$

The heat dissipation can be obtained as follows:

$$P = 0.105 \times Tmax \times (Ni\text{-}No) = 0.105 \times 10 \times (90\text{-}6.4) = 87.8\ W$$

Because the heat dissipation varies depending on the motor rotation speed, it is necessary to select temporarily also the specifications of the winding motor to be used.
Select a powder clutch model such that the torque, rotation speed and heat dissipation do not exceed the allowable values.
In these conditions, the model ZKB-1.2BN is available.

● Selecting the winding motor

[Geared motor selection conditions]

Rotation speed: $90\ r/min$ → Reduction ratio: $1/20$
Torque: $10.0\ Nm \times 2 \rightarrow 20\ Nm$ or more
Safety factor

[GM-S characteristics table]

Output (kW)	Rotation speed of output shaft (r/min)		Nominal reduction ratio	Actual reduction ratio	Allowable torque of output shaft (Nm)	
	50 Hz	60 Hz			50 Hz	60 Hz
0.2	500	600	1/3	1/3.07	3.5	2.9
	300	360	1/5	1/4.97	5.9	4.9
	150	180	1/10	1/9.93	12	9.8
	100	120	1/15	1/14.81	18	15
	75	90	1/20	1/20.08	24	20
	60	72	1/25	1/23.85	29	25
	50	60	1/30	1/28.88	33	29
	37.5	45	1/40	1/41.07	47	39
	30	36	1/50	1/48.96	59	49
	. . .					

[Geared motor selection result]

Output: 0.2 kW
Reduction ratio: 1/20

● What is reverse rotation input?

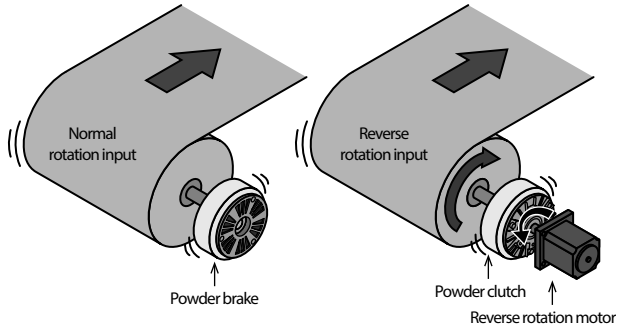

■ Unwinding side (Powder brake)

When the input rotation speed is lower than the minimum rotation speed in the powder brake

Minimum rotation speed		Model
5 r/min or less	→	ZKG, ZKB or ZX
15 r/min or less	→	ZA

In this case, replace the powder brake with the combination of "powder clutch + reverse rotation motor".

When the line speed is extremely low during unwinding, the input rotation speed may be lower than the minimum rotation speed in the powder brake.
In such a case, replace the powder brake with the combination of "powder clutch and reverse rotation motor".
It is called reverse rotation input because the motor rotates in the reverse direction of the reel shaft rotation direction.
Connect the output side (or input side) of the powder clutch to the unwinding reel shaft, connect the geared motor to the input side (or output side), and then always rotate the geared motor in the direction reverse to the rotation direction of the unwinding reel shaft. By this configuration, sufficient slip rotation speed can be secured, and stable torque control is achieved.
With regard to the powder clutch installation direction, usually connect its input side to the side of higher rotation speed. For example, when the line speed is low and the rotation speed of the unwinding reel shaft is always low, connect the input side of the powder clutch to the motor.
When the reel diameter at the start of unwinding is large and sufficient slip rotation speed can be obtained during almost all operation time even though the rotation speed is temporarily low at the start of unwinding, connect the output side of the powder clutch to the motor.

[Example of selecting the reverse rotation input]

This section shows an example of actually selecting the powder clutch and geared motor for reverse rotation on the unwinding side.

◆ When the line speed is low.

V:1 to 5 m/min

■ Selection result: Powder brake

Conditions

Tension	F: 40 to 80 [N]
Reel diameter	D: 75 to 250 [mm]
Line speed	V: 1 to 5 [m/min]

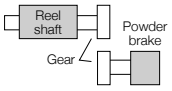

Reel shaft

Torque	T: 1.500 to 10.00 [Nm]
Rotation speed	N: 1.3 to 21.2 [r/min]
Approximate heat dissipation	P: MAX 6.7 [W]

Torque $T=\frac{D[m]\times F[N]}{2}$

Rotation speed $N=\frac{V[m/min]}{3.14\times D[m]}$

Heat dissipation $P=0.0167\times Fmax[N]\times Vmax[m/min]$

Gear ratio $R=\frac{\text{Brake shaft rotation speed}}{\text{Reel shaft rotation speed}}$

Recommended model

Model name: ZKB-1.2XN
Gear ratio R: 1

Model data Torque: 0.12 to 12 [Nm]
Rotation speed: 5 to 1800 [r/min]
Allowable heat dissipation: 95 to 140 [W]

Brake shaft

Torque	Tb: 1.500 to 10.00 [Nm] (12.5 to 83.3[%])
Rotation speed on output side	Nb: 1.3 to 21.2 [r/min]
Heat dissipation	P: MAX 6.7 [W]
Allowable heat dissipation	Pp: 95.5 [W] at 6.4 [r/min]

Calculation check

Tmin	Tmax
Good	*Good*
Nmin	Nmax
Bad	*Good*
	Pmax
	Good

Change the conditions, and select the model again.

Cooling method

Natural cooling

◆ Rotation speed on the output side

Reverse rotation input is effective!

Minimum value $Nmin$

"1.3 r/min < 5 r/min" ... NG

■ Selection result: Powder brake (Reverse rotation input)

Conditions

Tension	F: 40 to 80 [N]
Reel diameter	D: 75 to 250 [mm]
Line speed	V: 1 to 5 [m/min]

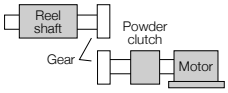

Reel shaft

Torque	T: 1.500 to 10.00 [Nm]
Rotation speed	N: 1.3 to 21.2 [r/min]
Approximate heat dissipation	P: MAX 6.7 [W]

Note: Because the rotation speed is too low, use a clutch with reverse rotation input.

Torque $T=\frac{D[m]\times F[N]}{2}$

Rotation speed $N=\frac{V[m/min]}{3.14\times D[m]}$

Heat dissipation P= P0 (Unwinding quantity) + P1(Reverse rotation input)
P0=0.0167 × Fmax[N] × Vmax[m/min]
P1=0.105 × No[r/min] × Tmax[Nm]

Gear ratio $R=\frac{\text{Clutch shaft rotation speed}}{\text{Reel shaft rotation speed}}$

Recommended model

Model name: ZKB-1.2BN
Gear ratio R: 1

Model data Torque: 0.12 to 12 [Nm]
Rotation speed: 5 to 1800 [r/min]
Allowable heat dissipation: 95 to 140 [W]

Clutch shaft

Reverse rotation input	No: 5.0 to 91.0 [r/min]
Torque	Tc: 1.500 to 10.00 [Nm] (12.5 to 83.3[%])
Rotation speed on output side	Nc: 1.3 to 21.2 [r/min]
Heat dissipation	P: 11.9 to 102.2 [W]
Allowable heat dissipation	Pp: 95.4 to 102.3 [W]

Note: Set the clutch input freely in the above range.

Calculation check

Tmin	Tmax
Good	*Good*
	Nmax
	Good
Pmin	Pmax
Good	*Good*

The selection is OK.

Cooling method

Natural cooling

● In the case of unwinding

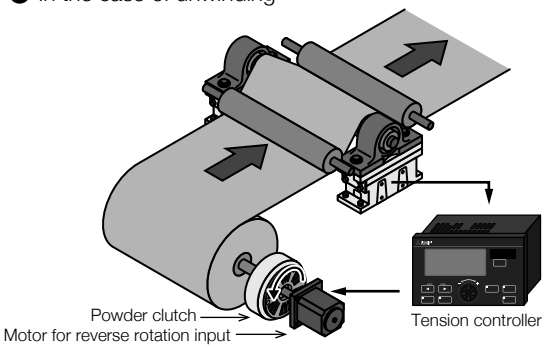

First, select the powder brake for unwinding.
As a result of calculation with the above conditions, no powder brake is available because there is an area where the rotation speed on the output side of the brake shaft is lower than the minimum rotation speed of "5 r/min".
In such a case, reverse rotation input is effective.

Perform the calculation using the same conditions as the previous calculation.
In these conditions, the model ZKB-1.2BN is recommended.

[Selection of geared motor for reverse rotation input]

■ Selection result: Powder brake (Reverse rotation input)

Conditions

Tension	F: 40 to 80 [N]
Reel diameter	D: 75 to 250 [mm]
Line speed	V: 1 to 5 [m/min]

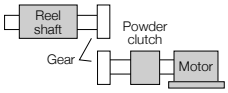

Reel shaft

Torque	T: 1.500 to 10.00 [Nm]
Rotation speed	N: 1.3 to 21.2 [r/min]
Approximate heat dissipation	P: MAX 6.7 [W]

Note: Because the rotation speed is too low, use a clutch with reverse rotation input.

Torque $T = \frac{D[m] \times F[N]}{2}$

Rotation speed $N = \frac{V[m/min]}{3.14 \times D[m]}$

Heat dissipation P= P0 (Unwinding quantity) + P1(Reverse rotation input)
P0=0.0167 × Fmax[N] × Vmax[m/min]
P1=0.105 × No[r/min] × Tmax[Nm]

Gear ratio $R = \frac{\text{Clutch shaft rotation speed}}{\text{Reel shaft rotation speed}}$

Recommended model

Model name: ZKB-1.2BN
Gear ratio R: 1
Model data Torque: 0.12 to 12 [Nm]
Rotation speed: 5 to 1800 [r/min]
Allowable heat dissipation: 95 to 140 [W]

Clutch shaft

Reverse rotation input	No: 5.0 to 91.0 [r/min]
Torque	Tc: 1.500 to 10.00 [Nm] (12.5 to 83.3[%])
Rotation speed on output side	Nc: 1.3 to 21.2 [r/min]
Heat dissipation	P: 11.9 to 102.2 [W]
Allowable heat dissipation	Pp: 95.4 to 102.3 [W]

Note: Set the clutch input freely in the above range.

Calculation check

Tmin	Tmax
Good	*Good*
	Nmax
	Good
Pmin	Pmax
Good	*Good*

The selection is OK.

Cooling method

Natural cooling

Key points

- Reverse rotation input No $5.0\ to\ 91.0\ r/min$
- Torque Tc $1.500\ to\ 10.00\ Nm$

Next, select the geared motor for reverse rotation input. Key points for selecting the motor are rotation speed and required torque.

Clutch specifications	Geared motor specifications

■ Clutch input No

$5.0\ to\ 91.0\ r/min$ → 5<Output side<91 r/min
Rotation speed

■ Torque Tc

$1.500\ to\ 10.00\ Nm$ → Allowable torque of output shaft
$10.00 \times \underbrace{2}_{\text{Safety factor}} = 20\ Nm$ or more

Select a model so that the rotation speed is within the reverse rotation input range (5 to 91 r/min in this case) and the required torque is the maximum torque (10 Nm in this case) or more of the clutch. It is recommended that the motor torque is twice or more the maximum torque of the clutch to allow a margin.
When the rotation speed and torque of the motor are determined, determine the output and reduction ratio with reference to the motor characteristics table.
As an example, select a geared motor from the characteristics table of the geared motor GM-S.

[GM-S characteristics table]

Output (kW)	Rotation speed of output shaft (r/min)		Nominal reduction ratio	Actual reduction ratio	Allowable torque of output shaft (Nm)	
	50 Hz	60 Hz			50 Hz	60 Hz
0.2	500	600	1/3	1/3.07	3.5	2.9
	300	360	1/5	1/4.97	5.9	4.9
	150	180	1/10	1/9.93	12	9.8
	100	120	1/15	1/14.81	18	15
	75	90	1/20	1/20.08	24	20
	60	72	1/25	1/23.85	29	25
	50	60	1/30	1/28.88	33	29
	37.5	45	1/40	1/41.07	47	39
	30	36	1/50	1/48.96	59	49
	⋮					

[Geared motor selection result]

Output: 0.2 kW
Reduction ratio: 1/20

● What is constant-slip control?

■ Winding side (Powder clutch)

Constant-slip control is effective when the allowable heat dissipation is smaller than the heat dissipation during operation.

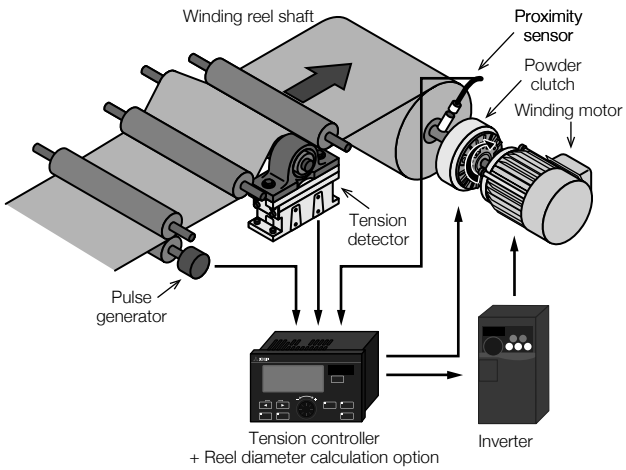

Constant-slip control is effective when there is no proper powder clutch model for the winding side because the allowable heat dissipation is exceeded.
Powder clutches are often used for controlling the tension of various winding machines, but there is no proper model in some cases because the heat generation during operation exceeds the allowable heat dissipation of any powder clutch. In such a case, the heat dissipation can be reduced by decreasing the input rotation speed of the powder clutch using the inverter and tension controller.
In this method, the inverter is controlled by the speed output signal, and the input rotation speed of the powder clutch is decreased as the reel diameter becomes larger to achieve constant slip.

[Selection example for constant-slip control]

◆ When the line speed is low

V:50 *to* 150 *m/min*

■ **Selection result: Powder clutch**

Conditions

Tension	F: 200 to 400 [N]
Reel diameter	D: 75 to 250 [mm]
Line speed	V: 50 to 150 [m/min]
Taper ratio	a: 0

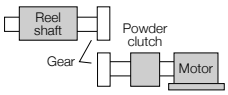

Reel shaft

Torque	T: 7.500 to 50.00 [Nm]
Rotation speed	N: 63.7 to 636.9 [r/min]
Approximate heat dissipation	P: MAX 3084.7 [W]

Torque $T=\frac{D[m]\times F[N]}{2}\times(1-a)$

Rotation speed $N=\frac{V[m/min]}{3.14\times D[m]}$

Heat dissipation $P1=0.105\times[No-Nmin]\times Tcmax$

Gear ratio $R=\frac{\text{Clutch shaft rotation speed}}{\text{Reel shaft rotation speed}}$

Taper ratio $R=\frac{\text{Tension at winding start - Tension at winding end}}{\text{Tension at winding start}}$

Recommended model

Model name: ZKB-40BN (Forced air cooling)

Gear ratio R: 1

Model data Torque: 4 to 400 [Nm]
Rotation speed: 5 to 1800 [r/min]
Allowable heat dissipation: 2800 to 2800 [W]

Clutch shaft

Clutch input	No: 641.9 to 642.0 [r/min]
Torque	Tc: 7.500 to 50.00 [Nm] (1.9 to 12.5[%])
Rotation speed on output side	Nc: 63.7 to 636.9 [r/min]
Heat dissipation	P: 3035.8 to 3036.1 [W]
Allowable heat dissipation	Pp: 2800.0 to 2800.0 [W]

Calculation check

Tmin	Tmax
Good	*Good*
	Nmax
	Good
Pmin	Pmax
Bad	*Bad*

Note: Set the clutch input freely in the above range.

Cooling method

Forced air cooling (Air: 20 × 10^4 Pa = 2 m^3/min)

Caution

- Closed-loop control (feedback control) is recommended because the powder clutch may be used with the torque of 5% or less.
- Minimize the mechanical loss as much as possible because the powder clutch may be used in the low torque area.
- Air piping, etc. is required separately

This section shows an example of selecting constant-slip control.
First, select the powder clutch for winding.
As a result of calculation with these conditions, no powder clutch can be selected because the heat dissipation exceeds the allowable heat dissipation.
In such a case, constant-slip control is effective.

◆ Rotation speed on the output side

Constant-slip control is effective!

Allowable heat dissipation (2800 W)	<	Heat dissipation (3035.8 W)

■ Selection result: Powder clutch (Constant slip)

Conditions

Tension	F: 200 to 400 [N]
Reel diameter	D: 75 to 250 [mm]
Line speed	V: 50 to 150 [m/min]
Taper ratio	a: 0

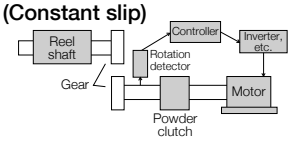

Reel shaft

Torque	T: 7.500 to 50.00 [Nm]
Rotation speed	N: 63.7 to 636.9 [r/min]
Approximate heat dissipation	P: MAX 3084.7 [W]

Note: Because the heat generation quantity per unit time caused by slip is too large, change the input rotation speed using the inverter, etc. when using the powder clutch.

Torque $T=\frac{D[m]\times F[N]}{2}\times(1-a)$

Rotation speed $N=\frac{V[m/min]}{3.14\times D[m]}$

Heat dissipation $P1=0.105\times[No-Nmin]\times Tcmax$

Gear ratio $R=\frac{\text{Clutch shaft rotation speed}}{\text{Reel shaft rotation speed}}$

Taper ratio $R=\frac{\text{Tension at winding start - Tension at winding end}}{\text{Tension at winding start}}$

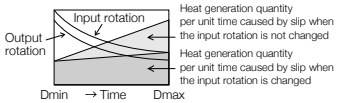

Recommended model

Recommended model

Model name: ZKB-5BN

Gear ratio R: 1

Model data Torque: 0.5 to 50 [Nm]
Rotation speed: 5 to 1800 [r/min]
Allowable heat dissipation: 180 to 360 [W]

Clutch shaft

Slip rotation speed	No: 5.0 to 40.0 [r/min]
Torque	Tc: 7.500 to 50.00 [Nm] (15.0 to 100.0 [%])
Rotation speed on output side	Nc: 63.7 to 636.9 [r/min]
Heat dissipation	P: 26.3 to 210.0 [W]
Allowable heat dissipation	Pp: 200.6 to 210.8 [W]

Calculation check

Tmin	Tmax
Good	*Good*
	Nmax
	Good
Pmin	Pmax
Good	*Good*

The slection is OK.

Note: Control the input rotation speed so that the slip rotation speed is within the above range.

<Constant-slip control>

Perform the calculation using the same conditions as the previous calculation.

In these conditions, the model ZKB-5BN is recommended.

[Selection example of motor for constant-slip control]

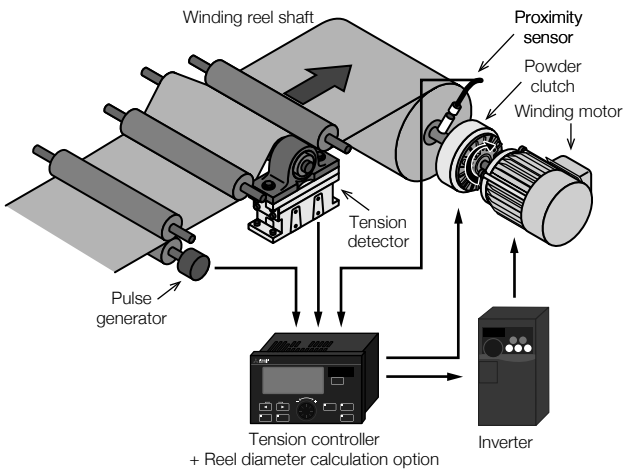

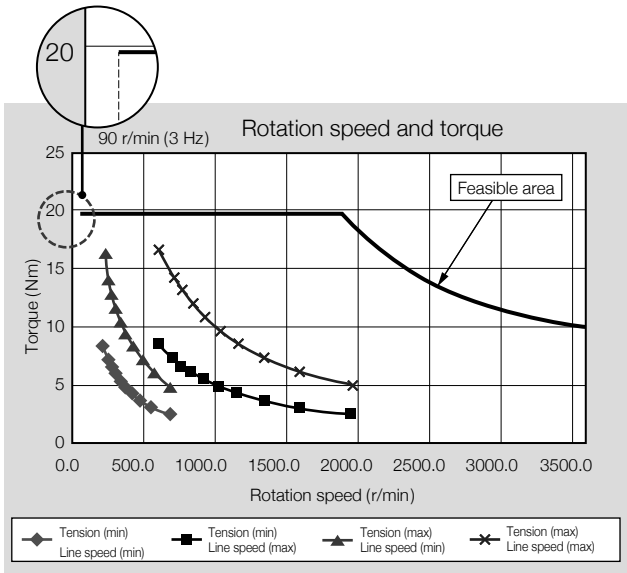

(1) Motor capacity

$$P = \frac{0.0167 \times Vmax \times Fmax \times Dmax}{Dmin} = \frac{0.0167 \times 150 \times 400 \times 0.25}{0.075} = 3340\ W$$

(2) Winding reel shaft torque

$$T = \frac{F \times D}{2} = \frac{(200 \text{ to } 400) \times (0.075 \rightarrow 0.25)}{2} = 7.5 \text{ to } 50\ Nm$$

(3) Winding reel shaft rotation speed

$$N = \frac{V}{(\pi \times D)} = \frac{(50 \text{ to } 150)}{(3.14 \times (0.075 \rightarrow 0.25))} = 63.7 \text{ to } 637\ r/min$$

(4) Motor shaft rotation speed

Suppose that the slip rotation speed of the clutch is 30 r/min

$$Nm = N + 30 = (63.7\ to\ 637) + 30 = 93.7\ to\ 667\ r/min$$

(5) Temporarily selecting the motor

Motor capacity: 3340 W⟶Rated output: 3.7 kW

Motor: SF-HRCA-3.7 K

Inverter: FR-E720-3.7 K

Rated torque: 19.6 Nm (Available torque ratio: 1:50)

Rotation speed: 3600 r/min maximum

(Rated rotation speed: 1800 r/min)

(Available rotation speed ratio: 1:100)

(6) Setting the gear ratio R

[1] From the required torque

$$Rt = \frac{\text{Winding reel shaft torque } (max)}{\text{Motor rated torque}} = \frac{50}{19.6} = 2.55 \text{ or more should be set.}$$

[2] From the rotation speed setting

$$\frac{\text{Motor rotation speed } (max)}{\text{Motor shaft rotation speed } (max)}$$

$$Rn = \frac{3600}{667} = 5.4 \text{ or less should be set.}$$

$$Rt < R < Rn$$

$$2.55 < R < 5.4 \rightarrow Set\ R\ to\ "3".$$

(7) Motor shaft torque

$$T' = T \times \frac{1}{R} = \frac{(7.5 \text{ to } 50)}{3} = 2.5 \text{ to } 16.7\ Nm$$

12.8 to 85.2% of the rated torque

(8) Motor shaft rotation speed

N' = N×R = (667 to 93.7) × 3 = 281.1 to 2001 r/min

7.8 to 55.6% of the maximum rotation speed

■ 6-7-3 Motor available only in combination with an inverter (for torque control)

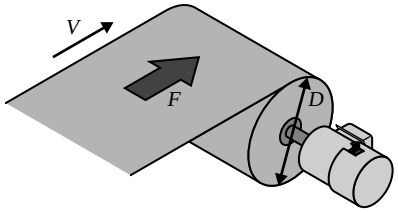

Usage conditions	
Tension (F)	50 to 100 N
Reel diameter (D)	90 to 500 mm
Line speed (V)	100 to 200 m/min

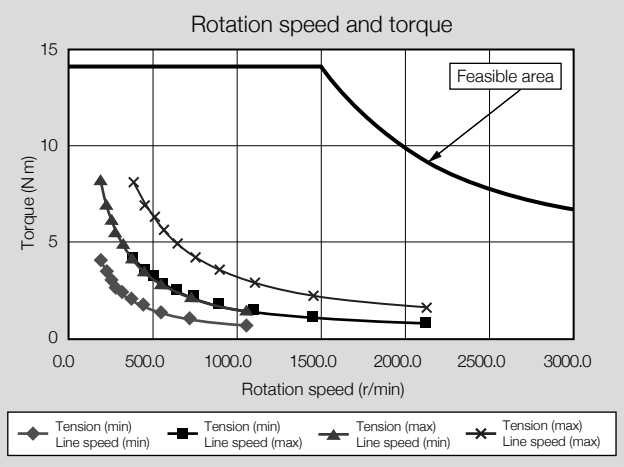

(1) Motor capacity

$$P = \frac{0.0167 \times Vmax \times Fmax \times Dmax}{Dmin} = \frac{0.0167 \times 200 \times 100 \times 0.5}{0.09} = 1856\ W$$

(2) Winding reel shaft torque

$$T = \frac{F \times D}{2} = \frac{(50\ \text{to}\ 100) \times (0.09 \rightarrow 0.5)}{2} = 2.3\ \text{to}\ 25\ Nm$$

(3) Winding reel shaft rotation speed

$$N = \frac{V}{(\pi \times D)} = \frac{(100\ \text{to}\ 200)}{(3.14 \times (0.09 \rightarrow 0.5))} = 63.6\ \text{to}\ 707\ r/min$$

(4) Temporarily selecting the motor

Motor capacity: 1856 W → Rated output: 2.2 kW

Motor: SF-V5RU2K Vector control

Inverter: FR-A840-3.7K

Rated torque: 14.1 Nm (Available torque ratio: 1:50)

Rotation speed: 3000 r/min maximum

(Rated rotation speed: 1500 r/min)

(Available rotation speed ratio: 1:1500)

(5) Setting the gear ratio R

[1] From the required torque

$$Rt = \frac{\text{Winding reel shaft torque}\ (max)}{\text{Motor rated torque}} = \frac{25}{14.1} = 1.77\ \text{or more should be set.}$$

[2] From the rotation speed setting

$$\frac{\text{Motor rotation speed}\ (max)}{\text{Motor shaft rotation speed}\ (max)}$$

$$Rn = \frac{3000}{707} = 4.24\ \text{or less should be set.}$$

$$Rt < R < Rn$$

$$1.77 < R < 4.24 \rightarrow Set\ R\ to\ "2".$$

(6) Motor shaft torque

$$T' = T \times \frac{1}{R} = \frac{(2.3\ \text{to}\ 25)}{2} = 1.15\ \text{to}\ 12.5\ Nm$$

8.2 to 88.7% of the rated torque

(7) Motor shaft rotation speed

$$N' = N \times R = (63.6\ to\ 707) \times 2 = 127.2\ to\ 1414\ r/min$$

4.24 to 47.1% of the maximum rotation speed

(8) Regenerative resistor

A regenerative resistor may be required when a motor available only in combination with an inverter is used for unwinding.

Regenerative power

$$PR = 0.0167 \times Vmax \times Fmax = 0.0167 \times 200 \times 100 = 334\ W$$

Resistor unit GRZG300-5Ω

(Allowable continuous power: 600 W)

■ 6-7-4 AC servo motor (for torque control)

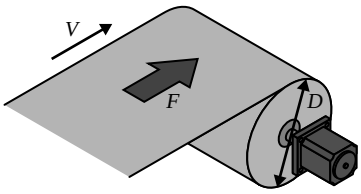

Usage conditions	
Tension (F)	50 to 100 N
Reel diameter (D)	90 to 500 mm
Line speed (V)	100 to 200 m/min

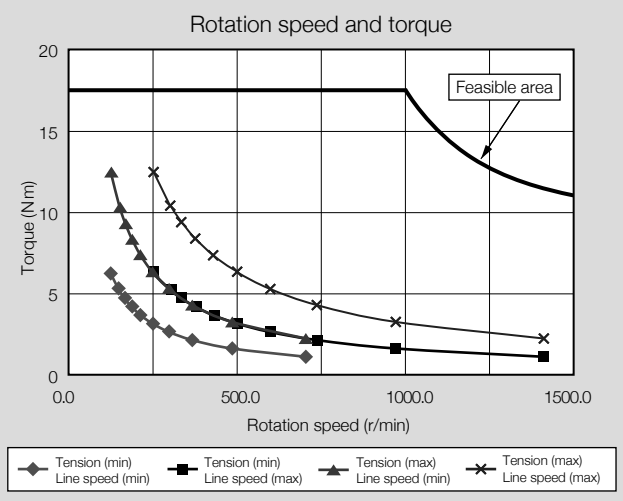

(1) Motor capacity

$$P = \frac{0.0167 \times Vmax \times Fmax \times Dmax}{Dmin} = \frac{0.0167 \times 200 \times 100 \times 0.5}{0.09} = 1856\ W$$

(2) Winding reel shaft torque

$$T = \frac{F \times D}{2} = \frac{(50\ \text{to}\ 100) \times (0.09 \rightarrow 0.5)}{2} = 2.3\ \text{to}\ 25\ Nm$$

(3) Winding reel shaft rotation speed

$$N = \frac{V}{(\pi \times D)} = \frac{(100\ \text{to}\ 200)}{(3.14 \times (0.09 \rightarrow 0.5))} = 63.6\ \text{to}\ 707\ r/min$$

(4) Temporarily selecting the motor

Motor capacity: 1856 W → Rated output: 2.0 kW

Motor: HG-SR201

amplifier: MR-J4-200A

Rated torque: 19.1 Nm (Available torque ratio: 1:100)

Rotation speed: 1500 r/min maximum

(Available rotation speed ratio: 1:1500)

(5) Setting the gear ratio R

[1] From the required torque

$$Rt = \frac{\text{Winding reel shaft torque}\ (max)}{\text{Motor rated torque}} = \frac{25}{19.1} = 1.3\ \text{or more should be set.}$$

[2] From the rotation speed setting

$$\frac{\text{Motor rotation speed}\ (max)}{\text{Motor shaft rotation speed}\ (max)}$$

$$Rn = \frac{1500}{707} = 2.12\ \text{or less should be set.}$$

$$Rt < R < Rn$$

$$1.3 < R < 2.12 \rightarrow Set\ R\ to\ "2".$$

(6) Motor shaft torque

$$T' = T \times \frac{1}{R} = \frac{(2.3\ \text{to}\ 25)}{2} = 1.15\ \text{to}\ 12.5\ Nm$$

6.0 to 65.4% of the rated torque

(7) Motor shaft rotation speed

$$N' = N \times R = (63.6\ to\ 707) \times 2 = 127\ to\ 1414\ r/min$$

8.4 to 94.2% of the maximum rotation speed

(8) Regenerative resistor

A regenerative resistor may be required when a motor available only in combination with an AC servo motor is used for unwinding.

Regenerative power

$$PR = 0.0167 \times Vmax \times Fmax = 0.0167 \times 200 \times 100 = 334\ W$$

Regenerative resistor built into the MR-J4-200A: 100 W

Accordingly, the external regenerative resistor MR-RB30 (Allowable regenerative power: 300 W) is required.

■ 6-7-5 Motor available only in combination with an inverter (for speed control)

[In the case of unwinding]

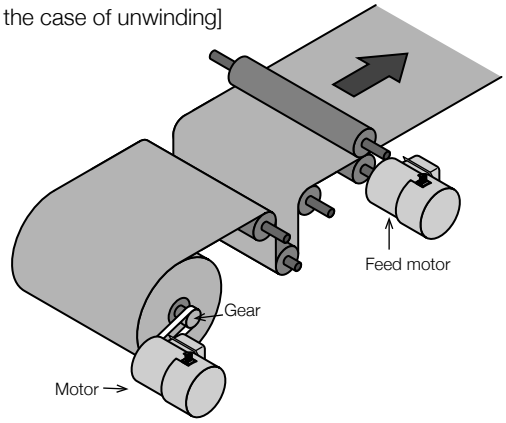

[In the case of winding]

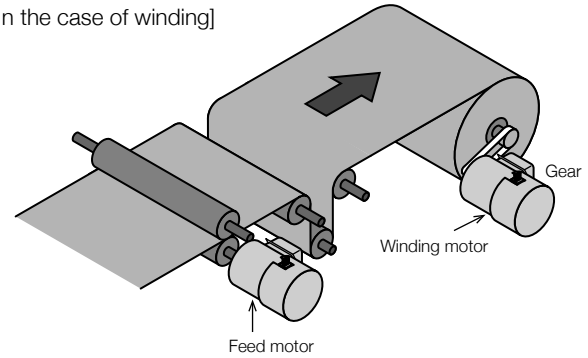

Usage conditions	
Tension (F)	100 to 200 N
Reel diameter (D)	90 to 500 mm
Line speed (V)	200 to 300 m/min
Acceleration/deceleration time (t)	20 sec
Maximum reel shaft inertia moment (I)	15 kgm^2

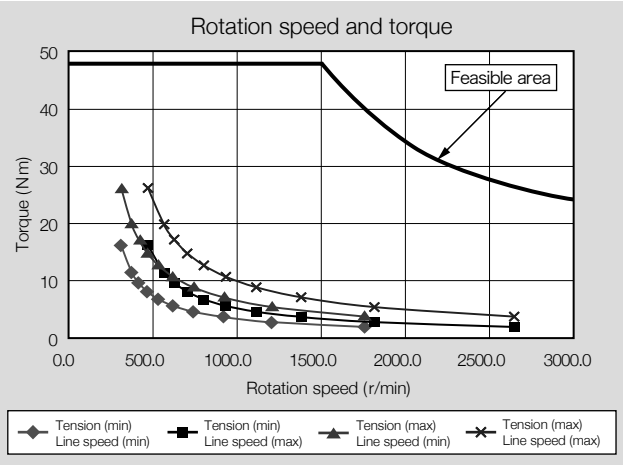

(1) Motor capacity

$$P = \frac{0.0167 \times Vmax \times Fmax \times Dmax}{Dmin} = \frac{0.0167 \times 300 \times 200 \times 0.5}{0.09} = 5566\ W$$

(2) Required torques

[1] Shaft torque

$$T = \frac{F \times D}{2} = \frac{(100 \text{ to } 200) \times (0.09 \rightarrow 0.5)}{2} = 4.5 \text{ to } 50\ Nm$$

[2] Torque generated by acceleration/deceleration

$$T2max = I \times \alpha = 15 \times 1 = 15\ Nm$$

Angular acceleration: α angular speed: ω

$$\alpha = \frac{\omega}{t} = \frac{(2\pi \times N/60)}{t} = \frac{(2\pi \times 191/60)}{20} = 1\ rad/s^2$$

[3] Torque required in the reel shaft

$$T = T1max + T2max = 50 + 15 = 65\ Nm$$

(3) Winding reel shaft rotation speed

$$N = \frac{V}{(\pi \times D)} = \frac{(200 \text{ to } 300)}{(3.14 \times (0.09 \rightarrow 0.5))} = 127 \text{ to } 1061\ r/min$$

(4) Temporarily selecting the motor

Motor capacity: 5566 W → Rated output: 7.5 kW

Motor: SF-V5RU7K

Inverter: FR-A820-11K

Rated torque: 47.7 Nm (Available torque ratio: 1:20)

Rotation speed: 3000 r/min maximum

(Rated rotation speed: 1500 r/min)

(Available rotation speed ratio: 1:200)

(5) Setting the gear ratio R

[1] From the required torques

$$Rt = \frac{\text{Winding reel shaft torque } (max)}{\text{Motor rated torque}} = \frac{65}{47.7} = 1.36 \text{ or more should be set.}$$

[2] From the rotation speed setting

$$\frac{\text{Motor rotation speed } (max)}{\text{Motor shaft rotation speed } (max)}$$

$$Rn = \frac{3000}{1061} = 2.82 \text{ or less should be set.}$$

$$Rt < R < Rn$$

$$1.36 < R < 2.82 \rightarrow Set\ R\ to\ "2.5".$$

(6) Motor shaft torque

$$T' = T \times \frac{1}{R} = \frac{(4.5 \text{ to } 65)}{2.5} = 1.8 \text{ to } 26\ Nm$$

3.7 to 54.5% of the rated torque

(7) Motor shaft rotation speed

$$N' = N \times R = (12\ to\ 1061) \times 2.5 = 318\ to\ 2653\ r/min$$

10.6 to 88.4% of the maximum rotation speed

■ 6-7-6 AC servo motor (for speed control)

[In the case of unwinding]

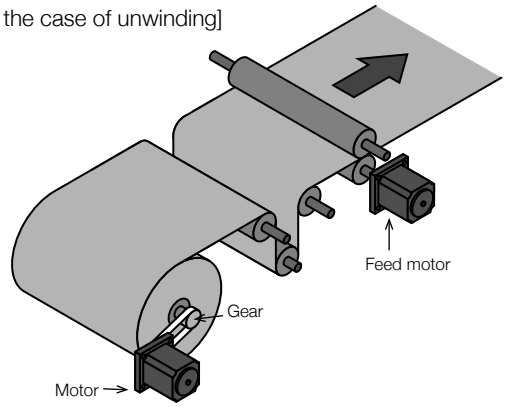

[In the case of winding]

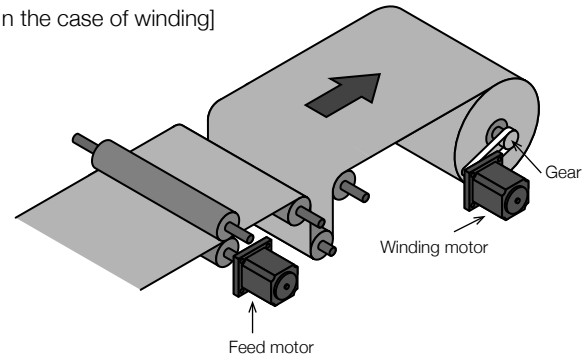

Usage conditions	
Tension (F)	100 to 200 N
Reel diameter (D)	90 to 500 mm
Line speed (V)	200 to 300 m/min
Acceleration/deceleration time (t)	20 sec
Maximum reel shaft inertia moment (I)	15 kgm²

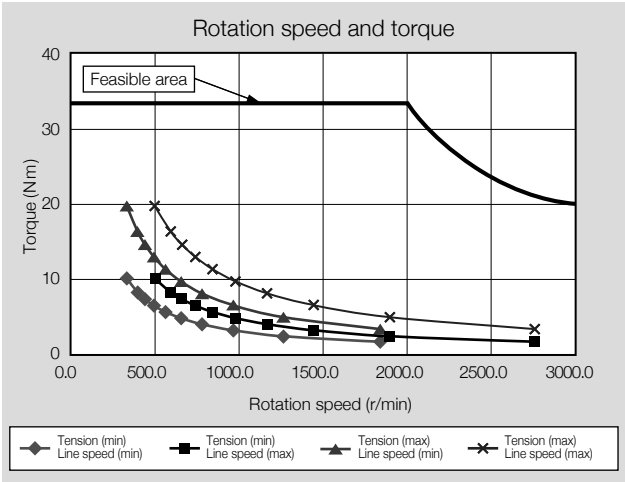

(1) Motor capacity

$$P = \frac{0.0167 \times Vmax \times Fmax \times Dmax}{Dmin} = \frac{0.0167 \times 300 \times 200 \times 0.5}{0.09} = 5566\ W$$

(2) Required torques

[1] Shaft torque

$$T = \frac{F \times D}{2} = \frac{(100 \text{ to } 200) \times (0.09 \rightarrow 0.5)}{2} = 4.5 \text{ to } 50\ Nm$$

[2] Torque generated by acceleration/deceleration

$$T2max = I \times \alpha = 1.5 \times 1 = 1.5\ Nm$$

Angular acceleration: α angular speed: ω

$$\alpha = \frac{\omega}{t} = \frac{(2\pi \times N/60)}{t} = \frac{(2\pi \times 191/60)}{20} = 1\ rad/s^2$$

[3] Torque required in the reel shaft

$$T = T1max + T2max = 50 + 1.5 = 51.5\ Nm$$

(3) Winding reel shaft rotation speed

$$N = \frac{V}{(\pi \times D)} = \frac{(200 \text{ to } 300)}{(3.14 \times (0.09 \rightarrow 0.5))} = 127 \text{ to } 1061\ r/min$$

(4) Temporarily selecting the motor

Motor capacity: 5566 W → Rated output: 7 kW

Motor: HG-SR702

Servo amplifier: MR-J4-700A

Rated torque: 33.4 Nm (Available torque ratio: 1:100)

Rotation speed: 3000 r/min maximum

(Rated rotation speed: 2000 r/min)

(Available rotation speed ratio: 1:50)

Motor inertia moment: 154×10^{-4} kgm² (0.0154 kgm²)

Recommended load inertia moment ratio: 15 times or less

(5) Setting the gear ratio R

[1] From the required torques

$$Rt = \frac{\text{Winding reel shaft torque } (max)}{\text{Motor rated torque}} = \frac{51.5}{33.4} = 1.54 \text{ or more should be set.}$$

[2] From the rotation speed setting

$$\frac{\text{Motor rotation speed } (max)}{\text{Motor shaft rotation speed } (max)}$$

$$Rn = \frac{3000}{1061} = 2.82 \text{ or less should be set.}$$

$$Rt < R < Rn$$

$$1.54 < R < 2.82 \rightarrow Set\ R\ to\ "2.6".$$

(6) Motor shaft torque

$$T' = T \times \frac{1}{R} = \frac{(4.5 \text{ to } 51.5)}{2.6} = 1.7 \text{ to } 19.8\ Nm$$

5.4 to 66.5% of the rated torque

(7) Motor shaft rotation speed

$$N' = N \times R = (127\ to\ 1061) \times 2.6 = 330\ to\ 2759\ r/min$$

11 to 92% of the maximum rotation speed

(8) Load inertia moment ratio

$$\frac{\text{Load shaft inertia moment ratio}}{R^2} < \text{(Motor inertia moment) x (Load inertia moment ratio)}$$

$$\frac{1.5}{2.6^2} < 0.0154 \times 15$$

$$0.221 < 0.231 \rightarrow OK$$

Point! When selecting an actuator

First, learn the features of various actuators, identify the machine specifications, and then select a proper actuator. Next, perform detailed calculations for selection, and check whether the temporarily selected actuator meets the intended specifications. It is necessary to examine actuators carefully because selecting a proper actuator has the largest impact on machine performance and economic efficiency.

Chapter 7

Basis of Tension Control System Construction

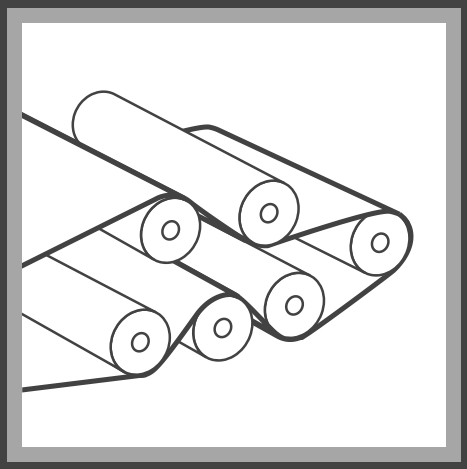

7-1 Basic tension control system

7-2 Configuration of the tension control system

7-3 Taper tension control

Chapter 7

Basis of Tension Control System Construction

When constructing an actual tension control system, it is necessary to set the machine specifications suitable for each material and to construct a system that meets the machine specifications.
The machine specifications differ with different materials, and the system configuration differs considerably when the machine specifications are different.

7-1 Basic tension control system

■7-1-1 System having only the unwinding section and winding section

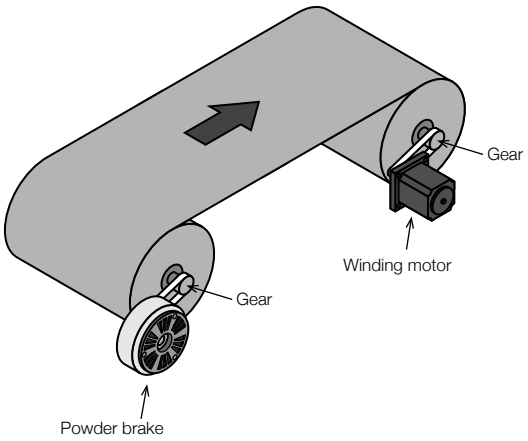

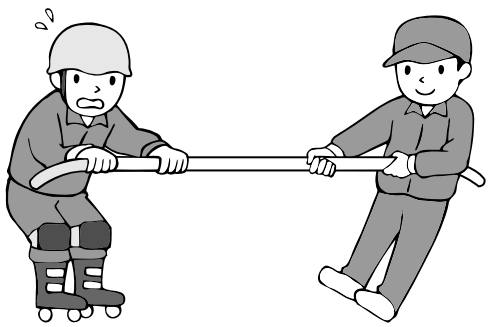

The simplest tension control system is a machine which unwinds and winds a material. In such a system, the speed should be controlled in either the unwinding section or winding section regarded as the pulling side, and the other section should be controlled as the pulled side. The pulling side works as the main shaft in the system.

In the system shown in the left figure, the unwinding section is controlled by the powder brake. The powder brake is an actuator designed for torque control, and can work only as the pulled side. Accordingly, the tension should be controlled on the unwinding section. On the other hand, the winding motor should control the speed so that the peripheral speed of the wound material is kept constant even if the reel diameter changes.

The winding section working as the pulling side can be controlled by the torque or speed. Even if several free rollers are installed in the intermediate section, the tension from the unwinding section to the winding section is determined by the result of unwinding control in this system.

●Configuration example

In the configuration without intermediate shafts, either the winding reel shaft or the unwinding reel shaft is controlled by the torque, and the other shaft is controlled by the speed.
In example (1), the unwinding reel shaft is controlled by the torque, and the winding reel shaft is controlled by the speed.
In example (2), the unwinding reel shaft is controlled by the speed, and the winding reel shaft is controlled by the torque.
Actuators for torque control include powder clutches/brakes, servo motors (in torque control mode), inverters/motors (equipped with encoder), etc. Actuators for speed control include servo motors (in speed control mode), inverters/motors (not equipped with encoder), etc. The regenerative unit is required separately when the motor is used on the regenerative side (for braking).

(1) Unwinding side: Torque control, winding side: Speed control

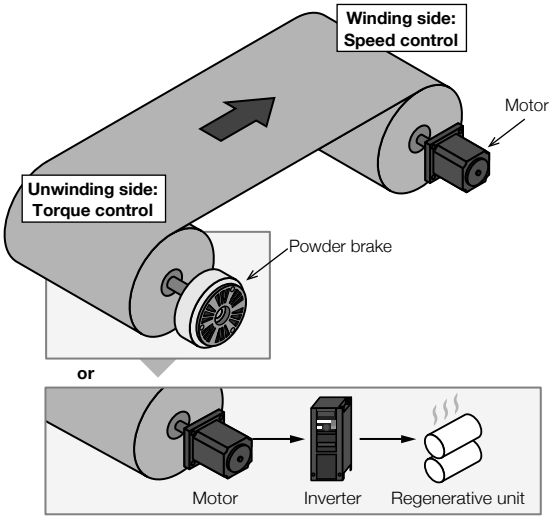

(2) Unwinding side: Speed control, winding side: Torque control

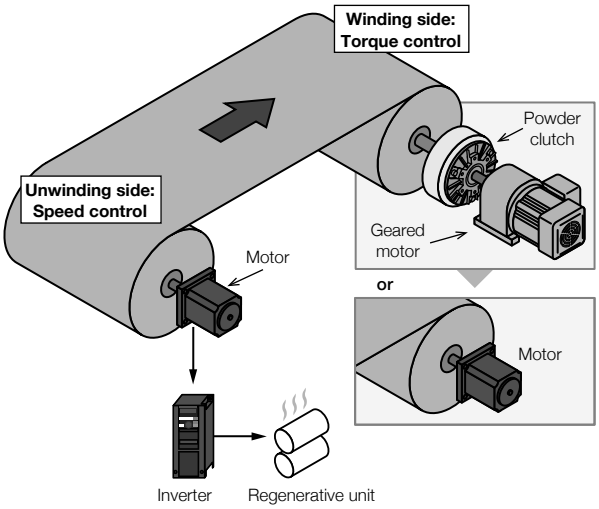

■7-1-2 System having an intermediate main shaft

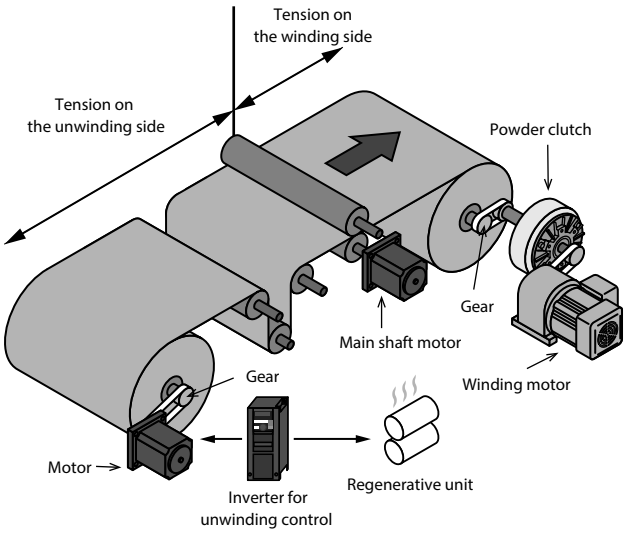

The left figure shows the basic tension control system in which the main shaft is added in the intermediate section of the machine shown in Subsection 7-1-1. The intermediate nip roll keeps the material speed constant.
The material speed can become uneven due to the eccentricity of the wound material in the machine shown in Subsection 7-1-1. On the other hand, the material speed is stable in this system because the external shape of the nip roll installed in the intermediate section does not change.
In this system, the control should be such that the main shaft works as the pulling side in the relationship between the unwinding reel shaft and the main shaft and between the winding shaft and the main shaft. The control method can be determined freely for the winding reel shaft which winds the material fed from the unwinding reel shaft (pulled side) or main shaft.
In the left figure, the unwinding reel shaft is controlled by the speed using the dancer roll and inverter, and the winding reel shaft is controlled by the torque using the powder clutch. The tension is constant from unwinding to winding in the machine shown in Subsection 7-1-1, but the tension for unwinding (from the main shaft to the unwinding reel shaft) and the tension for winding (from the main shaft to the winding reel shaft) can be controlled separately in this system.

●A weak main shaft making the entire system unstable

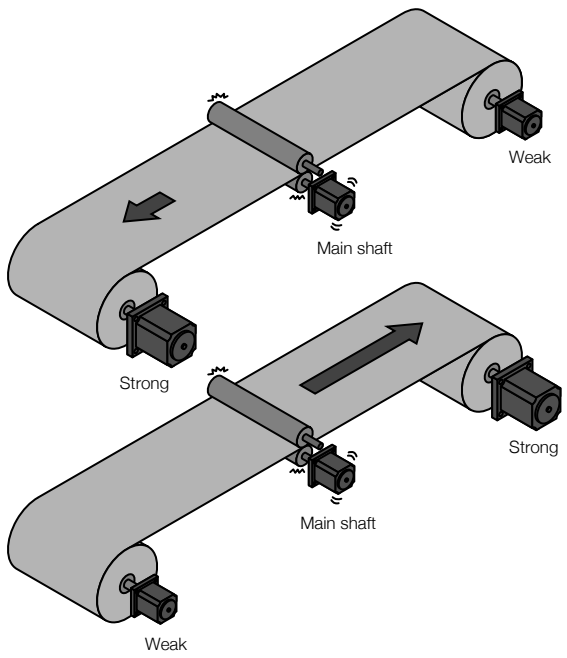

The main shaft is controlled by the speed. If the driving force of the main shaft is insufficient, the material speed may be unstable due to changes in the tension for unwinding or winding. In addition, the force caused by the inertia of the entire machine is applied to the main shaft during acceleration or deceleration.

●Installing a main shaft having the force to support the entire system

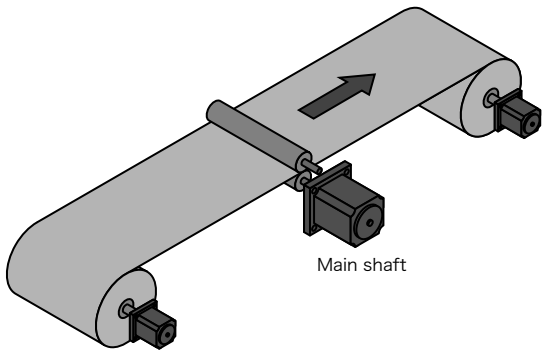

Accordingly, the main shaft should have a driving force that can control the material stably at a constant speed even if the tension for unwinding or winding changes or if the acceleration or deceleration of the machine causes an effect.

●Configuration example

In a system having an intermediate main shaft, control the unwinding reel shaft and winding reel shaft by the torque or speed, and control the intermediate shaft by the speed. Four types of combination are available as shown below.
Actuators for torque control include powder clutches/brakes, servo motors (in torque control mode), inverters/motors (equipped with encoder), etc.
Actuators for speed control include servo motors (in speed control mode), inverters/motors (not equipped with encoder), etc.
The regenerative unit is required separately when the motor is used on the regenerative side (for braking).

(1) Unwinding side: Torque control, winding side: Torque control

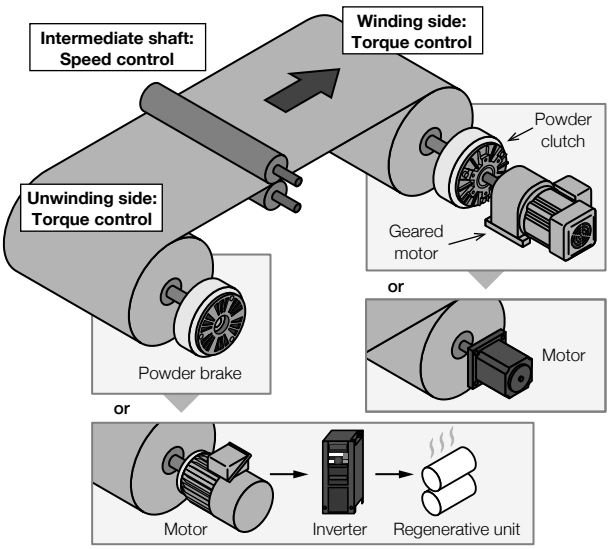

(2) Unwinding side: Torque control, winding side: Speed control

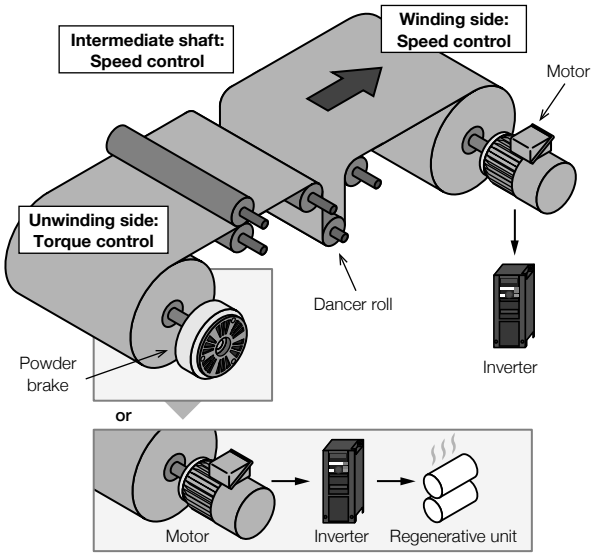

(3) Unwinding side: Speed control, winding side: Torque control

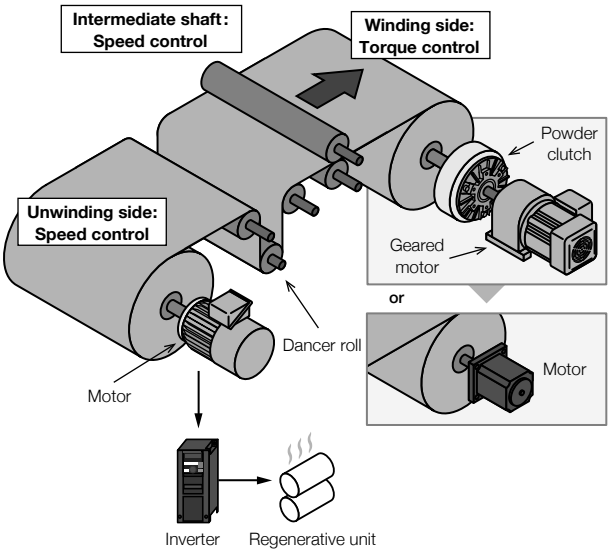

(4) Unwinding side: Speed control, winding side: Speed control

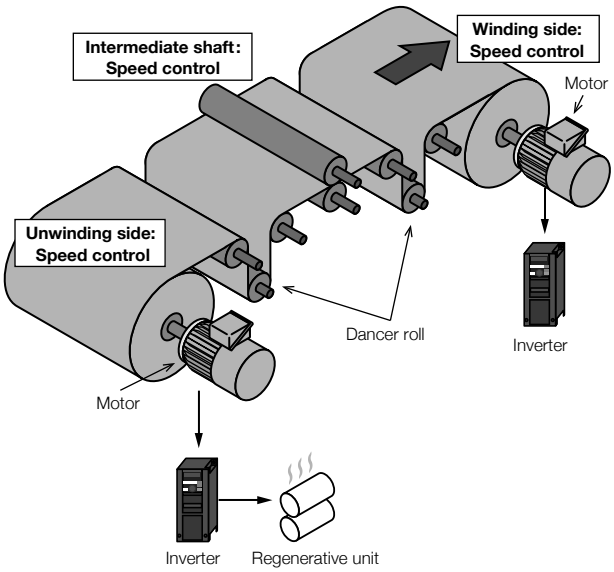

■7-1-3 Advantages and disadvantages of the intermediate shaft

Intermediate shaft	Unwinding	Winding	Advantage	Disadvantage
Not installed	Torque control	Speed control	- The configuration is simple because the main shaft works also as the winding reel shaft. (A separate main shaft does not exist.) - The material surface is not damaged because the material is not nipped.	- The tension for winding and tension for unwinding cannot be set separately. - The speed fluctuates considerably compared with the system in which the main shaft is set separately. - The regenerative converter is required when the motor is installed on the unwinding side.
	Speed control	Torque control		
Installed	Torque control	Torque control	- The line speed is stable. - Because the material is nipped by the intermediate shaft, the tension for winding and tension for unwinding can be set separately. - The system can cope with low tension because the motor can positively feed out the material when the dancer roll is used. The dancer roll mitigates fluctuations of the tension even if the machine accelerates or decelerates.	- An actuator is required for each of the winding reel shaft, unwinding reel shaft and main shaft. - The material surface may be damaged because the material is nipped.
	Speed control	Torque control		
	Torque control	Speed control		
	Speed control	Speed control		

Powder clutches/brakes are suitable for torque control at low line speed, and motors are suitable for torque control at high line speed.

Actuators for torque control: Powder clutches/brakes, servo motors (in torque control mode), inverters/motors (equipped with encoder), etc.
Actuators for speed control: Servo motors (in speed control mode), inverters/motors (not equipped with encoder), etc.

7-2 Configuration of the tension control system

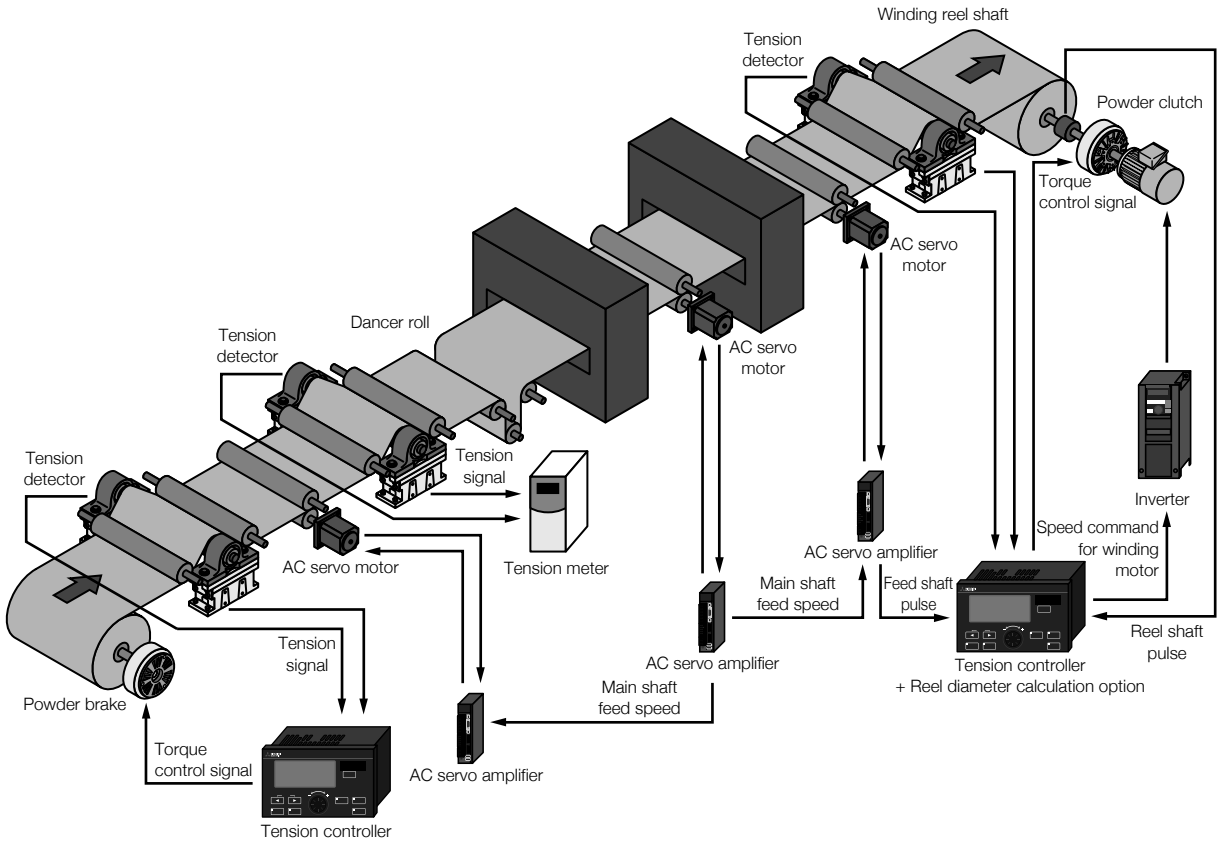

■7-2-1 Nip roll

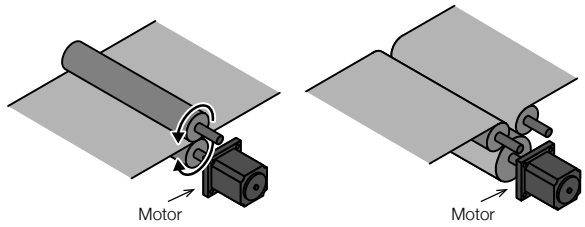

Nip roll mechanism　　Nip roll alternative mechanism

The tension of the material fed in the machine is changed in each process. In addition, the role of tension control is different in each section of the machine. Accordingly, it is necessary to change over the control in each section of the machine even for a material that is fed continuously. To achieve the changeover of control, driving rolls are installed in the middle of the machine for dividing each control section.

Nip rolls which nip the material from above and from below are generally used as the mechanism for driving the material in the middle. Nip rolls usually nip the material with a constant pressure given by the air cylinder.

If the material cannot be nipped due to the nature of the processes, the material may be wound around rubber rolls so that the surface friction of the driving rolls becomes as large as possible.

■7-2-2 Setting the main shaft

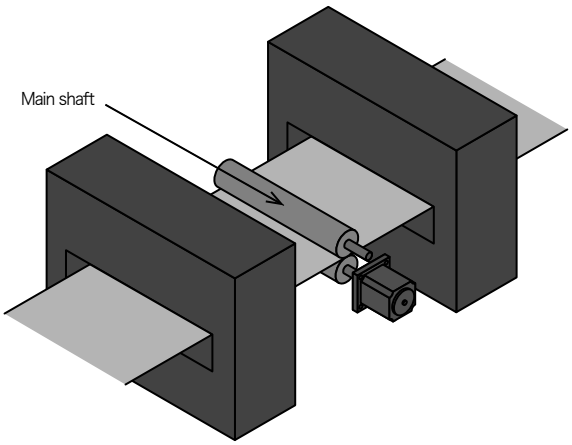

It is essential that the machine has only one main shaft and that its speed is controlled. The main shaft determines the processing speed of the entire machine, and other driving shafts should follow the main shaft to feed the web stably. The main shaft works as the leader of the entire machine. In the same way that a human leader should exert leadership to control, conduct and lead a group, the main shaft should have sufficient force to lead the entire machine properly. The term "force" here refers to sufficiently stable speed control and torque.
The material is affected by three types of forces (torques): "force of the tension", "force caused by the inertia" and "force caused by mechanical friction". The main shaft should rotate stably even if these forces change successively. Especially when the machine accelerates or decelerates, the torque caused by the inertia of all rotating parts of the machine is applied to the main shaft. This fact should be considered when selecting the actuator for the main shaft.

■7-2-3 Tension control method

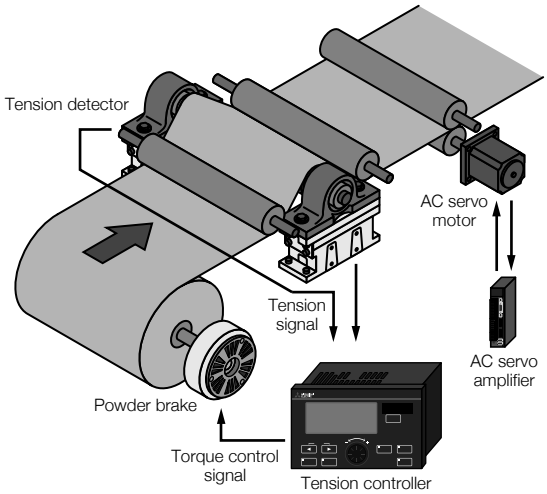

[Unwinding control]

Unwinding control is performed in the area from the reel from which the material is unwound to the first driving roll. Unwinding control is required to unwind the material whose diameter changes at a constant tension. In unwinding control, the driving roll should work as the pulling side and the unwinding reel shaft should work as the pulled side.
In some machines including resin film forming machines, the unwinding section does not exist because resin is fed out continuously in a film shape.

●Unwinding mechanism

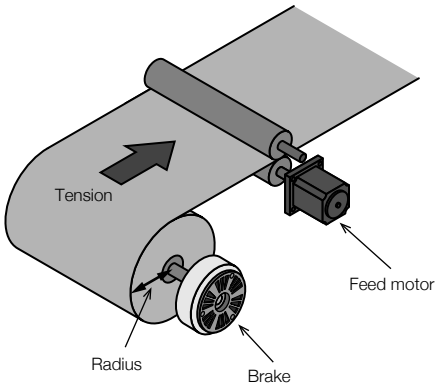

[1-shaft unwinding mechanism]

The brake is installed in the reel shaft. Because of the relationship "Unwinding tension = Braking torque/Unwinding radius", a constant tension can be achieved when the braking torque is decreased in accordance with the decrease of the reel diameter.
A speed increaser and speed reducer such as gear and pulley are installed as necessary between the reel shaft and the brake.

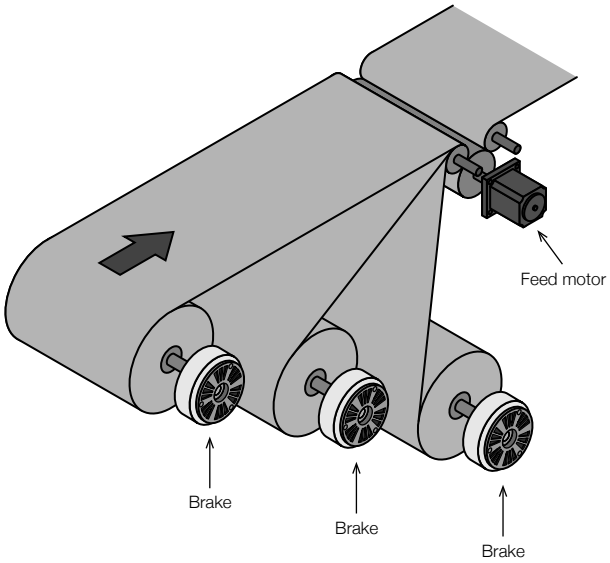

[Simultaneous multi-shaft unwinding mechanism]

In the single cutter (overlapped paper cutting machine), yarn sizing machine and film laminator, long materials wound around multiple reels are unwound at the same time. When overall tension control is performed, the torque of each brake should be even. The intended tension (tension set value) is changed in accordance with the thickness, width, strength, etc. of the material. In addition, because the reel diameter is always changing, each brake should have sufficient performance to adjust the torque in a wide range.

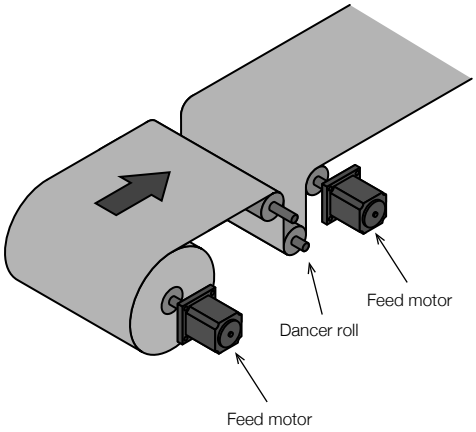

[Unwinding mechanism with motor]

■Positive unwinding mechanism

In the following cases, the reel shaft may be driven by the motor to achieve positive unwinding:

- When the reel is heavy, and manual operations such as initial paper passing should be made easy
- When the peripheral speed of the preparatory reel should be controlled so that it becomes equivalent to the unwinding speed of the currently used reel in the automatic paper splicing device (auto paster)
- When the tension caused by mechanical loss of the unwinding shaft is high compared with the intended unwinding tension
- When the acceleration tension caused by the reel inertia is high at startup (Positive unwinding and compensation of the mechanical loss or inertia are required.)

In the above cases, tension control by the speed using the dancer roll mechanism is generally required.

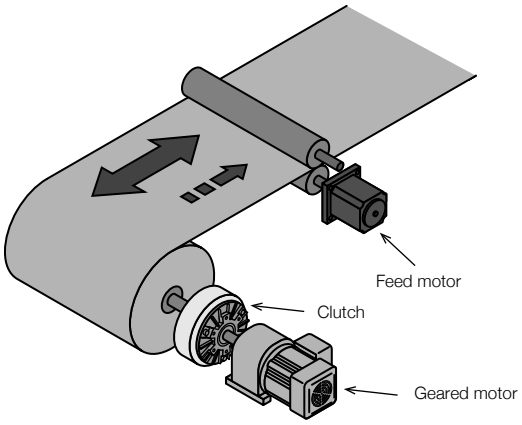

■Unwinding mechanism driven by reverse rotation

In the following cases, the motor and clutch are used instead of the brake to drive the reel by reverse rotation:

- When the material is wound and unwound between a pair of reels in the rewinding machine
- When the rotation speed of the brake is 5 r/min (15 r/min in the ZA type) or less on the unwinding side

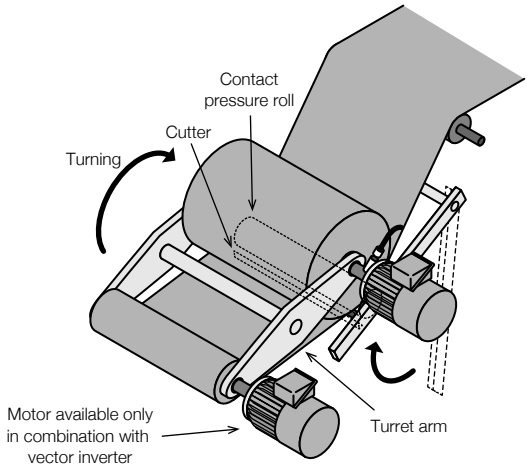

[Automatic paper splicing mechanism]

This mechanism is designed to splice the material (paper) without stopping the machine using two or three unwinding reels installed in the turning arm (turret arm) by the following procedure:

(1) Double-sided adhesive tape is put on the outer periphery of the new shaft in advance.
(2) The arm turns to move the new shaft near the upper surface of the unwound material.
(3) The new shaft is predrive , and the peripheral speed of the new shaft is made equivalent to the machine speed.
(4) The traveling material is pressed onto the new shaft using the contact pressure roll, and the material in the new shaft is connected to the traveling material.
(5) The cutter is actuated, and cuts the material in the original shaft.

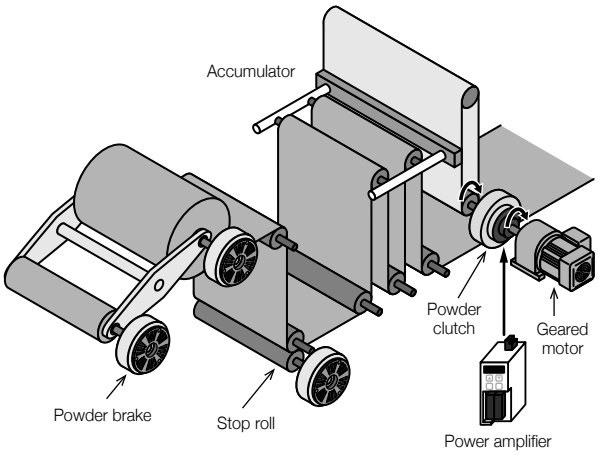

Two or three reel shafts are installed in the turning arm (turret arm), and paper is spliced by the following procedure:

(1) The arm turns to move the preparatory reel to the lower surface of the unwound material.
(2) The brake is applied to the stop roll of the accumulator to stop unwinding.
(3) The lifting roll of the accumulator moves down, and continues to feed paper. The tension is kept constant by controlling the torque of the clutch for moving up the lifting roll.
(4) The material in the new reel and original reel (stopped) is pressurized, and the original paper is cut.
(5) The brake of the stop roll is released, and the lifting roll moves up.
(6) The torque of the unwinding brake is controlled to keep the prescribed tension.

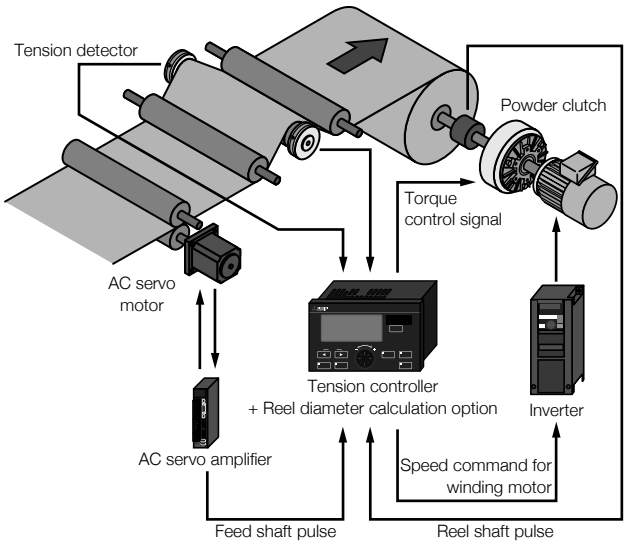

[Winding control]

Winding control is performed in the reel which winds the material from the final driving roll.

In the machine adopting winding control, the material should be wound into a neat shape because the material will be used in the next machine. To achieve a neat shape, the tension is not kept constant, but is decreased gradually as the reel diameter increases (taper tension) in some cases. Alternatively, a mechanism to prevent the involvement of air during winding may be installed.

In winding control also, the driving roll should work as the pulling side and the winding shaft should work as the pulled side. In some machines in which the cut status is the final product such as newspaper printing machines and cutters, winding control is not performed.

●Winding mechanism

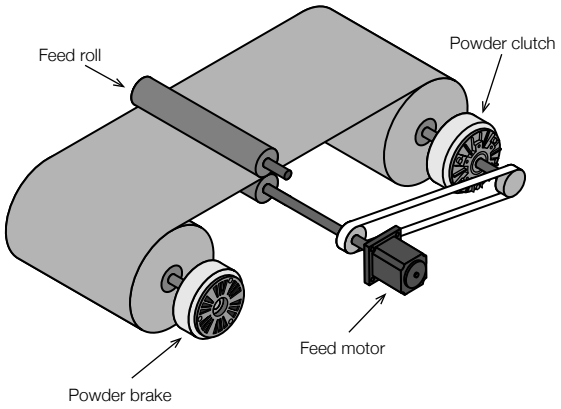

[Small-capacity winding mechanism]

The material winding speed is kept constant by the rotation speed of the feed roll. The torque of the clutch is increased as the winding reel diameter increases to keep the tension constant.

Though the input rotation speed of the clutch is constant, the rotation speed on the output side decreases and the slip rotation speed (difference between the input rotation speed and the output rotation speed) increases as the reel diameter increases.

The speed reduction mechanism such as gear and pulley is installed as necessary in the input shaft and output shaft of the clutch.

Heat generation in the clutch and brake is proportional to the product of the slip rotation speed and transmission torque. In the unwinding brake, the heat generation amount is always constant because the slip rotation speed is low when the torque is high (that is, the reel diameter is large) and the torque is small when the slip rotation speed is high (that is, the reel diameter is small).

In the case of a clutch, the slip rotation speed is high when the torque is high, and thermally unfavorable phenomena may occur. A large-sized motor is required for winding in the same way. The unwinding power (W) can be calculated approximately by the expression "0.0167 × Line speed (m/min) × Tension (N)".

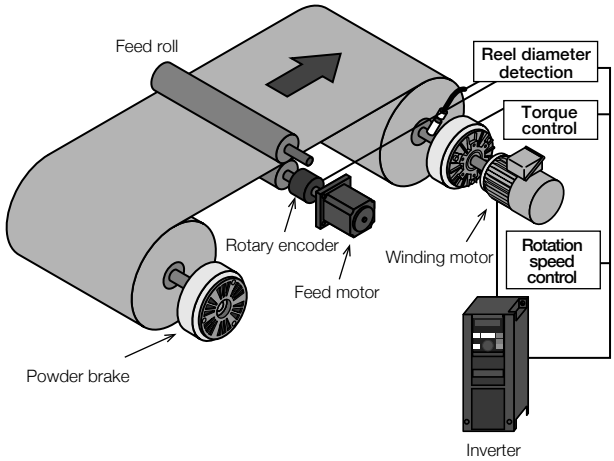

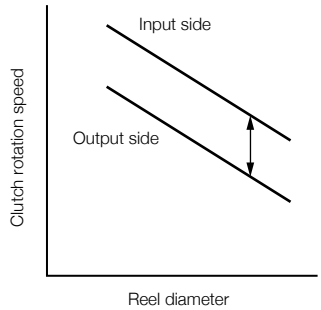

[Constant-slip control mechanism for winding]

By using the tension controller having the slip rotation speed control function, it is possible to control the rotation speed of the winding motor so that the slip rotation speed of the winding clutch becomes constant without regard to the reel diameter. This can decrease the heat dissipation of the clutch.

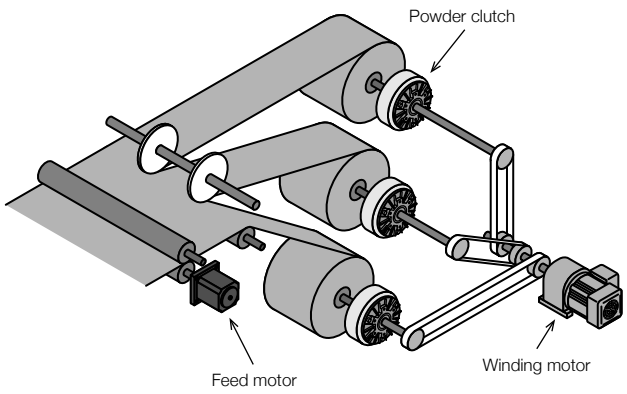

[Multi-shaft winding mechanism]

In the slitter (which cuts a wide sheet into tape) and separator (which separates a laminated sheet and winds it), the clutches may be installed in multiple reel shafts and controlled by one winding motor as shown in the left figure.

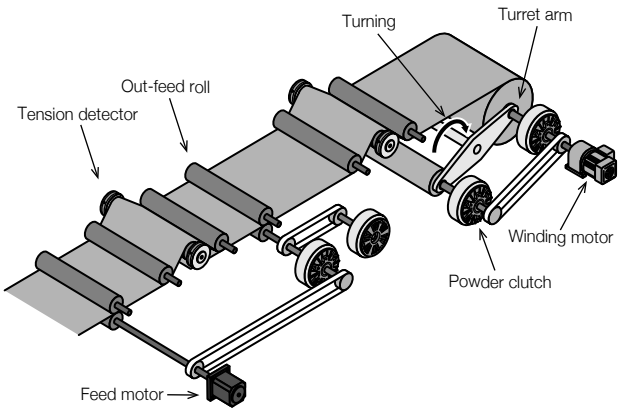

[Continuous winding mechanism]

When both automatic paper splicing & unwinding and automatic paper splicing & winding are performed at the same time, an accumulator is installed (for paper splicing while winding is stopped) in some cases and is not installed (for paper splicing while winding is performed) in other cases.

When an accumulator is not installed, predrive control is required to match the peripheral speed. The left figure shows the 2-shaft winding mechanism in which out-feed control is adopted in the continuous winding method (without the accumulator).

In the winding mechanism, the clutch and motor are installed in the turret arm in some cases, and installed on the stationary side in other cases.

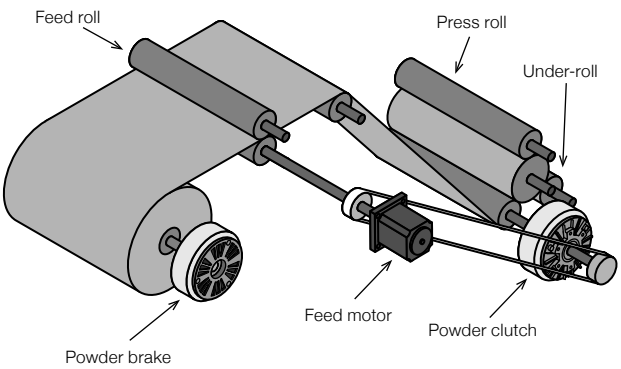

[Surface winding]

The area around the reel shaft is in contact with the under-roll by the pressure from the press roll.

The clutch controls the under-roll driving torque to achieve a constant tension.

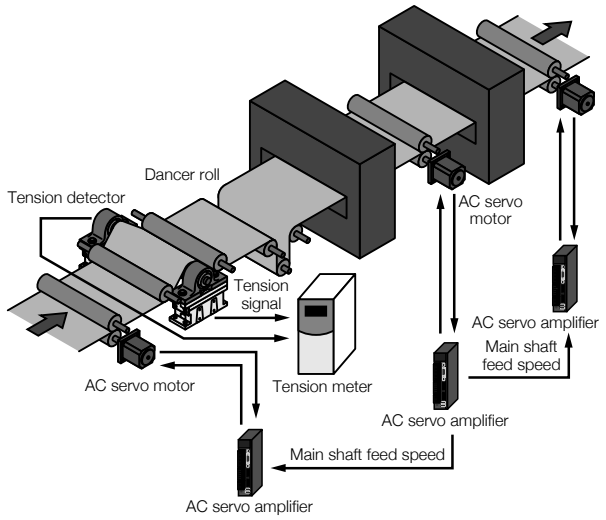

[Intermediate shaft control]

Intermediate shaft control is performed in the area from the first driving roll to the last driving roll in the machine. The unwinding side from the main shaft (area between the unwinding reel and the feed roll) is called in-feed, and the winding side from the main shaft (area between the winding reel and the feed roll) is called out-feed.

The in-feed area is designed to assure stable tension of the material unwound by unwinding control before processing and to prevent shocks generated by changeover of the unwound material from being transmitted to the processing section.

The out-feed area is designed to prevent fluctuations in the winding tension from being transmitted to the processing section. Because the tension changes by taper tension control in winding control, the out-feed area cuts the tension so that changes in tension do not affect the processing section. The out-feed area also prevents shocks generated by changeover of the wound material from being transmitted to the processing section.

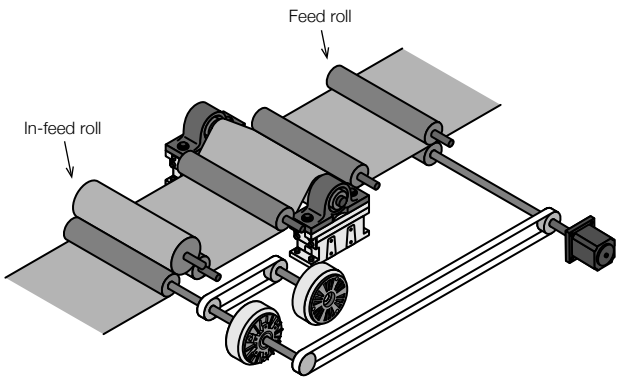

[In-feed mechanism]

The clutch and brake are installed in the in-feed roll shaft to enable reversible torque control. By this mechanism, the tension in the unwinding section and the tension in the paper feed section can be set independently. For example, the unwinding tension becomes smaller than the paper feed tension when the brake is applied, and the unwinding tension becomes higher than the paper feed tension when the clutch is driven. In addition, the in-feed mechanism can correct tension fluctuations of long cycle in the unwinding section.

When the in-feed roll and feed roll are driven by separate motors, servo motors may be used instead of the clutch-brake mechanism.

7-3 Taper tension control

●Taper tension control

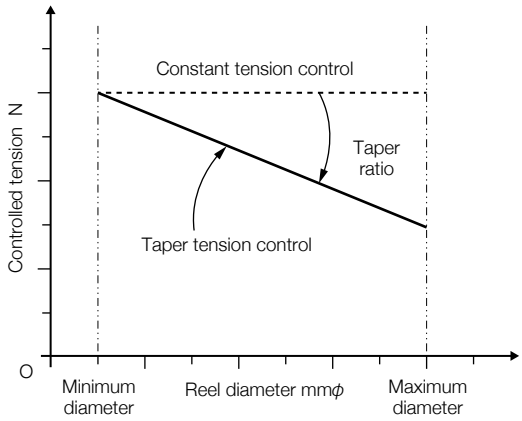

Taper tension control (taper control) refers to the control which changes the tension in accordance with changes in the reel diameter.
Taper control is mainly used for winding control. The tension is decreased as the reel diameter increases so that the material is not wound too tightly or not displaced during winding.
The taper ratio refers to the inclination of tension decrease against constant tension control as shown in the left figure.

●Broken line taper tension control

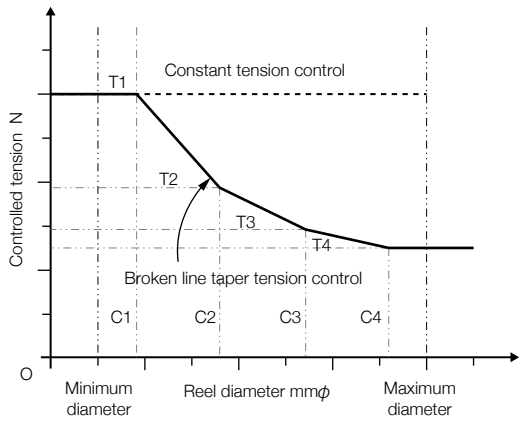

Broken line taper tension control refers to taper tension control which changes the taper ratio in the intermediate reel diameter without using the same taper ratio from the initial diameter to the final diameter.

Point! Construction of the tension control system

- Determining the main shaft in the machine used as the reference of the speed
- Dividing control sections, and installing nip rolls
- Determining the control type (speed control or torque control) to be adopted in each control section
- Determining the control method (dancer roll or tension detector)

Chapter 8

Application Examples

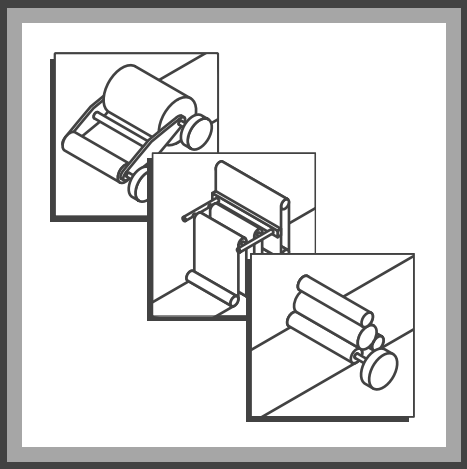

8-1 Business form printing machine
8-2 Offset printing machine
8-3 Gravure printing machine
8-4 Screen printing machine
8-5 Unwinder
8-6 Punching machine
8-7 Inflatable extruder + 2-shaft film winder
8-8 Multiple cutter
8-9 Slitter (1)
8-10 Laminator
8-11 Rolling machine
8-12 Film cleaning machine
8-13 Plating machine
8-14 Winder
8-15 Thickness measuring instrument
8-16 Steel plate plating line
8-17 Static electricity eliminating device
8-18 Slitter (2)
8-19 Laminator
8-20 Film processing machine

8-1 Business form printing machine

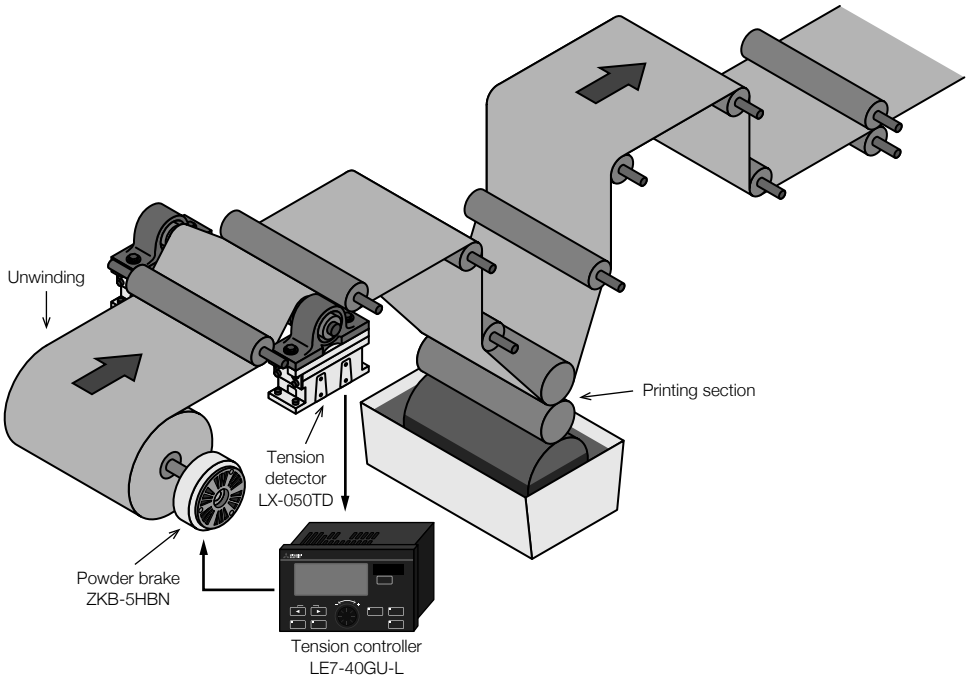

Features

- The feedback type tension controller is used to prevent color shift in printing and improve the pitch accuracy of punched holes used for feed to the printer.
- The stall memory function is effective in the inching operation for color matching during printing to reduce color shift and pitch deviation at restart.
- When the machine decelerates immediately before the base paper runs short, the deceleration gain is utilized to reduce color shift and pitch deviation caused by slackness.
- The powder brake is the thermo block cooling type which does not require water piping.

Usage conditions

		Unwinding
Tension	N	100 to 200
Line speed	m/min	250 or less
Reel diameter	ϕ	95 to 800

Workpiece material	Printer paper

Applicable models

Powder brake	ZKB-5HBN
Tension controller	LE7-40GU-L
Tension detector	LX-050TD

8-2 Offset printing machine

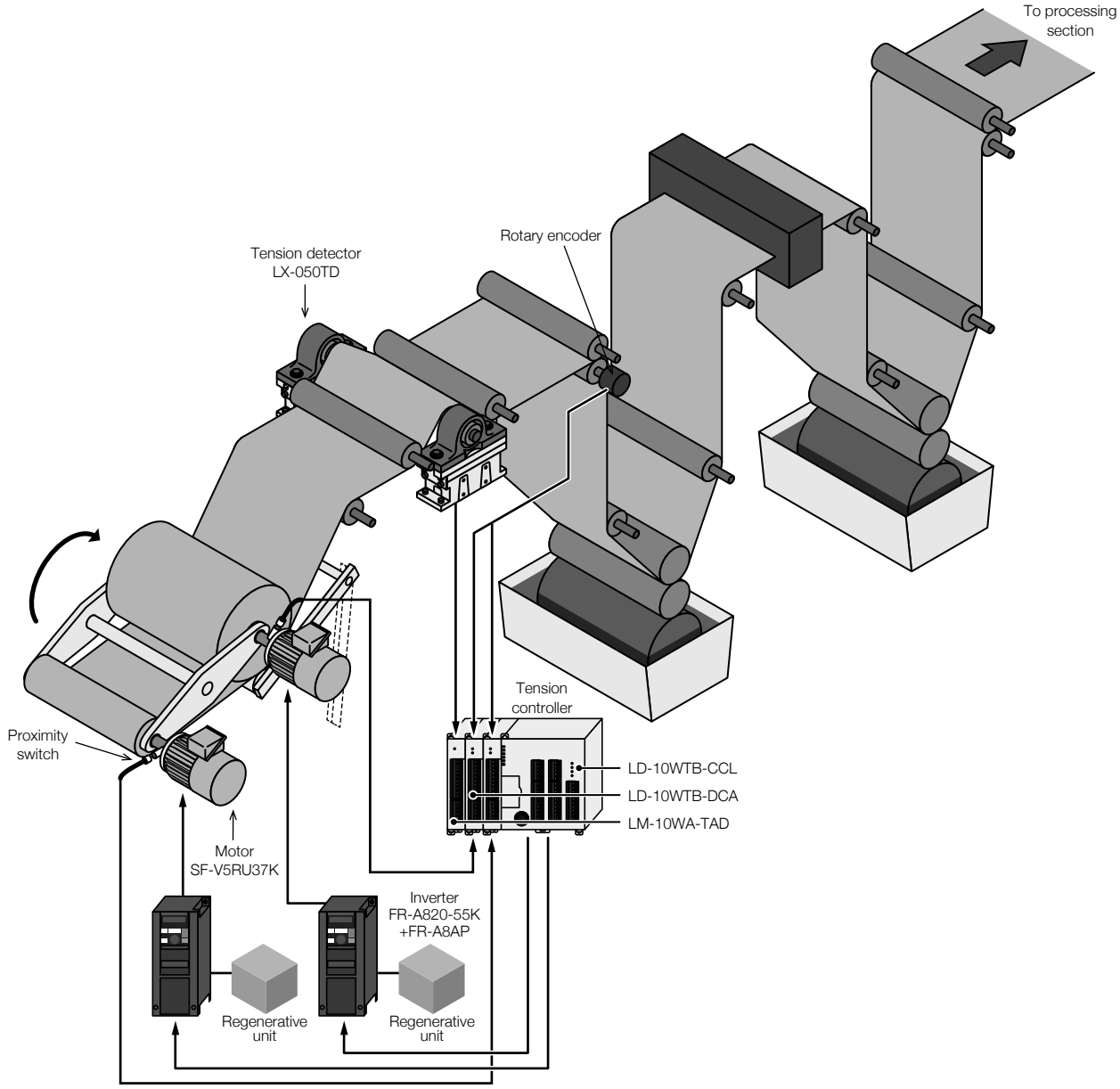

Features

- Fully-automatic paper splicing (auto paster) may be performed in the paper feed section to save labor.
- In tension control, the reel diameter is detected and fed back for automatic paper splicing.
- The stall memory function is effective in the inching operation for color matching during printing to reduce color shift and pitch deviation at restart.
- When the machine decelerates immediately before the base paper runs short, the deceleration gain is utilized to reduce color shift and pitch deviation caused by slackness.

Usage conditions

		Unwinding
Tension	N	200 to 300
Line speed	m/min	500 or less
Reel diameter	ϕ	100 to 1000

Applicable models

Vector inverter	FR-A820-55K + FR-A8AP (option)
Motor	SF-V5RU37K
Tension controller	LD-10WTB-CCL + LD-10WTB-DCA + LM-10WA-TAD or LE-10WTA-CCL + LD-10WTB-DCA x 2 units
Tension detector	LX-050TD

8-3 Gravure printing machine

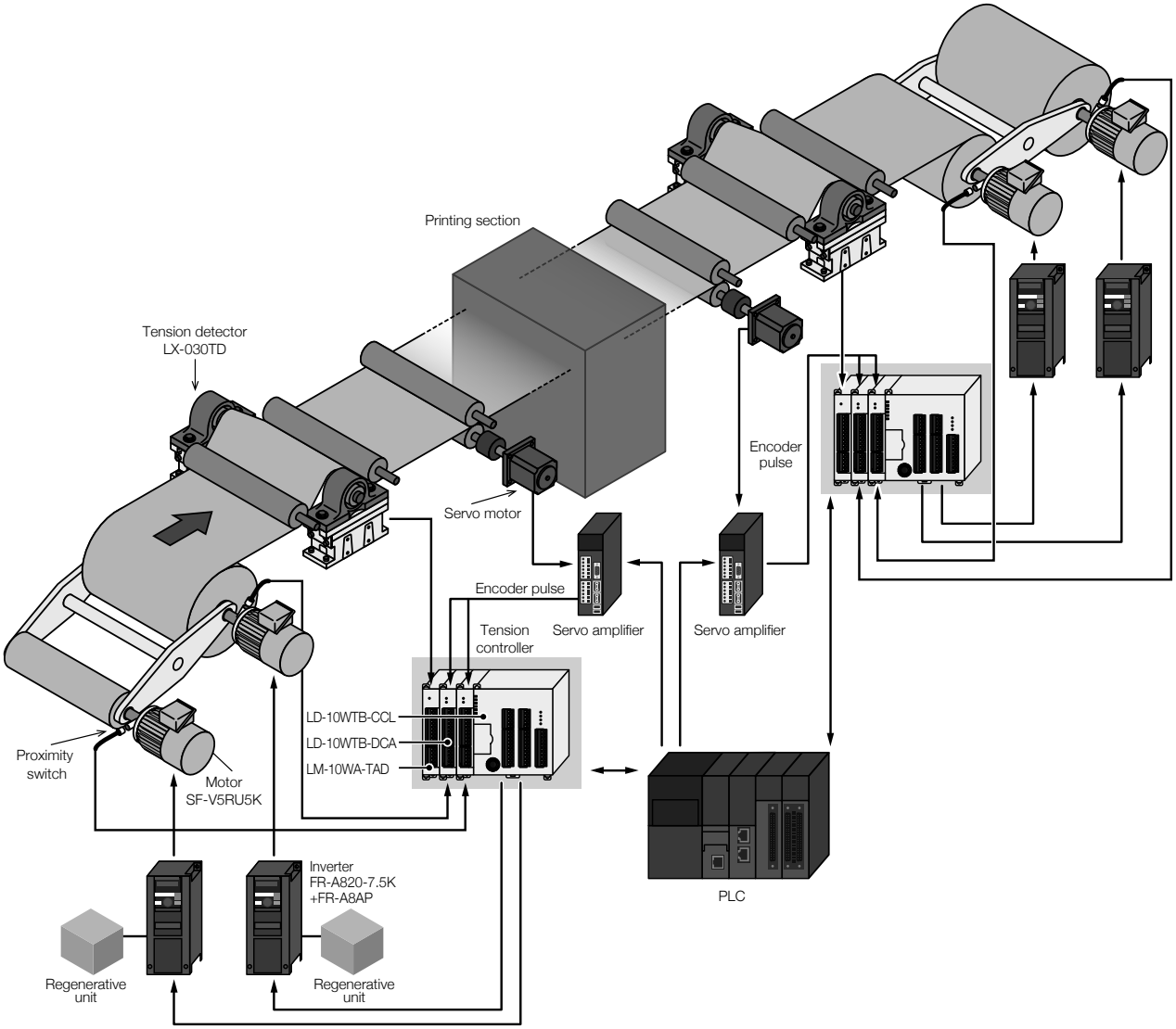

Features

- Two shafts in the unwinding section and two shafts in the winding section are driven by the vector inverters in torque control mode.
- The system is connected to the CC-Link, and operated through the network.

Usage conditions

		Unwinding	Winding
Tension	N	30 to 150	30 to 150
Line speed	m/min	200 or less	200 or less
Reel diameter	ϕ	100 to 700	100 to 700

Applicable models

Vector inverter	FR-A820-7.5K + FR-A8AP (option)
Motor	SF-V5RU5K
Tension controller	LD-10WTB-CCL + LD-10WTB-DCA + LM-10WA-TAD or LE-10WTA-CCL + LD-10WTB-DCA x 2 units
Tension detector	LX-030TD

8-4 Screen printing machine

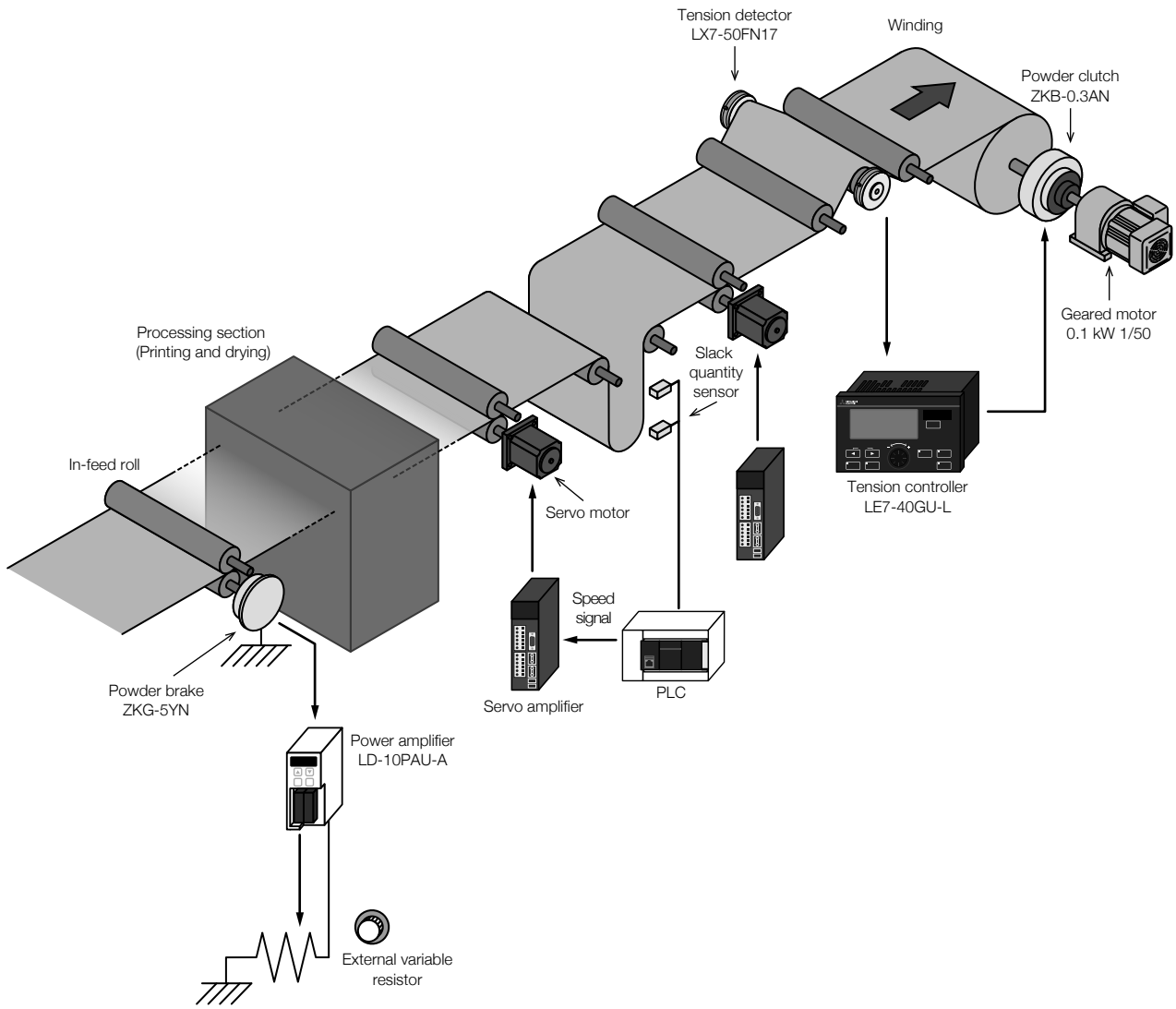

Features

- This system is applicable to machines which require intermittent feed in the processing section.
- The processing section performs intermittent operation. The material is made slack at the exit of the processing section to absorb the intermittent operation in the processing section, and the winding section performs continuous operation.
- The amount of slack at the exit of the processing section is detected by the sensor, and the intermittent roll speed is changed over so that the amount of slack is controlled to be within the prescribed range.

Usage conditions

		In-feed area	Winding
Tension	N	1 to 1.5	5 to 10
Line speed	m/min	1	1
Reel diameter	ϕ	100	90 to 400

Line speed in the processing section

Applicable models

In-feed	
Power amplifier	LD-10PAU-A
Powder brake	ZKG-5YN

Winding	
Tension controller	LE7-40GU-L
Geared motor	0.1 kW 1/50
Powder clutch	ZKB-0.3AN
Tension detector	LX7-50FN17

8-5 Unwinder

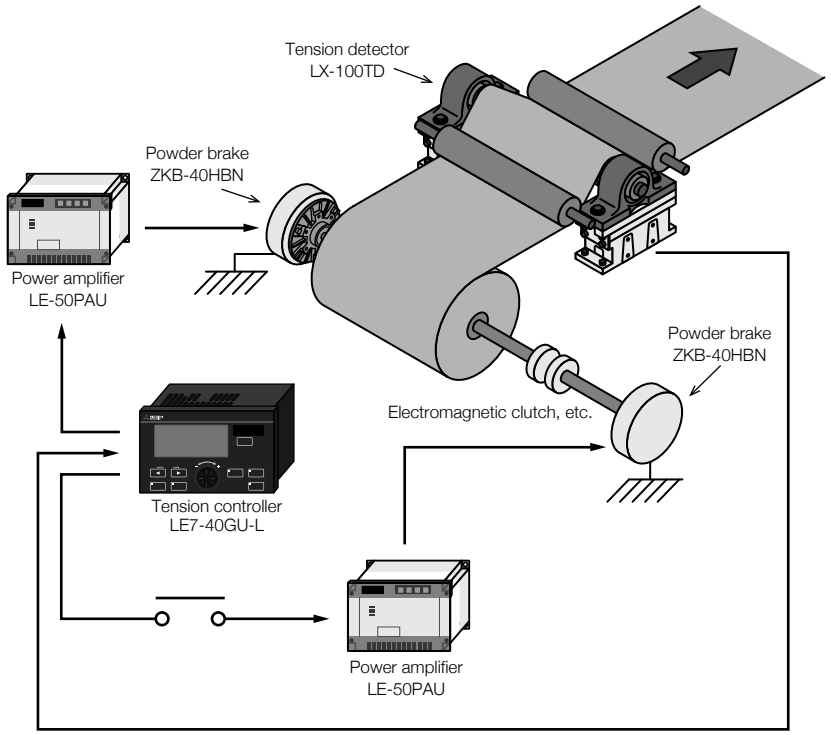

Features

- Because the torque control range is wide, two powder brakes are used together or only one powder brake is used at a time in accordance with the tension value.
- When the tension F is 200 to 500 N, two powder brakes (ZKB-40HBN) are used.
  When the tension F is 50 to 270 N, only one powder brake (ZKB-40HBN) is used.
  (It is necessary to separate the unused powder brake (ZKB-40HBN) using another clutch mechanism so that the idling torque does not cause an effect while the tension is low.)
- This system is applicable to unwinding control of large capacity.
  Because the available range of the braking torque control ratio is increased by changing over the number of used brakes in accordance with the tension value, this system is suitable for applications in which the difference in the used tension is large and applications in which the reel diameter ratio is high.

Usage conditions

		Unwinding
Tension	N	50 to 500
Line speed	m/min	50 to 700
Reel diameter	ϕ	96 to 1100

Applicable models

Unwinding	
Tension controller	LE7-40GU-L
Power amplifier	LE-50PAU
Powder brake	ZKB-40HBN
Tension detector	LX-100TD

8-6 Punching machine

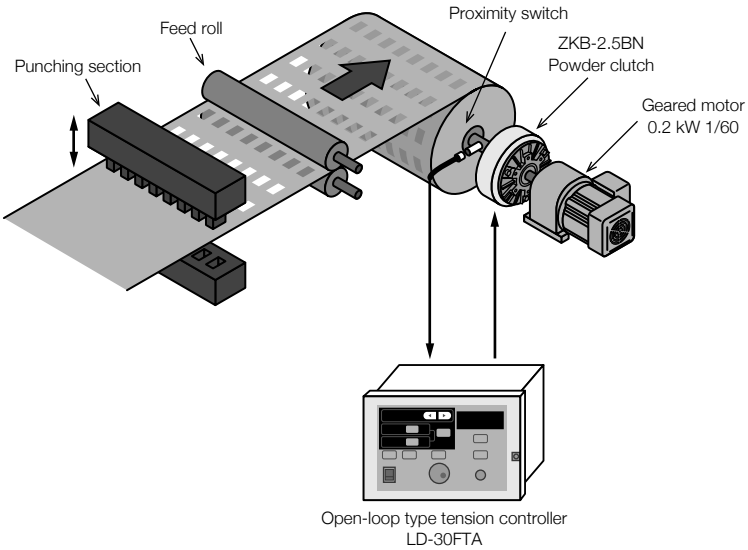

Features

- The material does not travel but is fed intermittently during punching. This system controls the tension in the winding section.
- Though the material is fed intermittently, the geared motor for winding is always rotating so that the material is stretched properly even in the stop status.
- Because intermittent operation is required, the reel diameter detection type tension controller, which offers stable control, is adopted.
- Because the material thickness is 200 μm, the reel shaft pulse number is set to "10 pulses/rotation" and the material thickness is set to "20 μm (= 200 × 1/10)".
- This system is applicable to machines requiring intermittent feed such as hot stamping machines and screen printing machines.

Usage conditions

		Winding
Tension	N	50 to 100
Line speed	m/min	6 or less
Reel diameter	ϕ	92 to 500

Material	Paper (Thickness: 200 μm)
Number of times of intermittent feed	10 times/min

Applicable models

Winding	
Tension controller	LD-30FTA
Powder clutch	ZKB-2.5BN
Geared motor	0.2 kW 1/60

8-7 Inflatable extruder + 2-shaft film winder

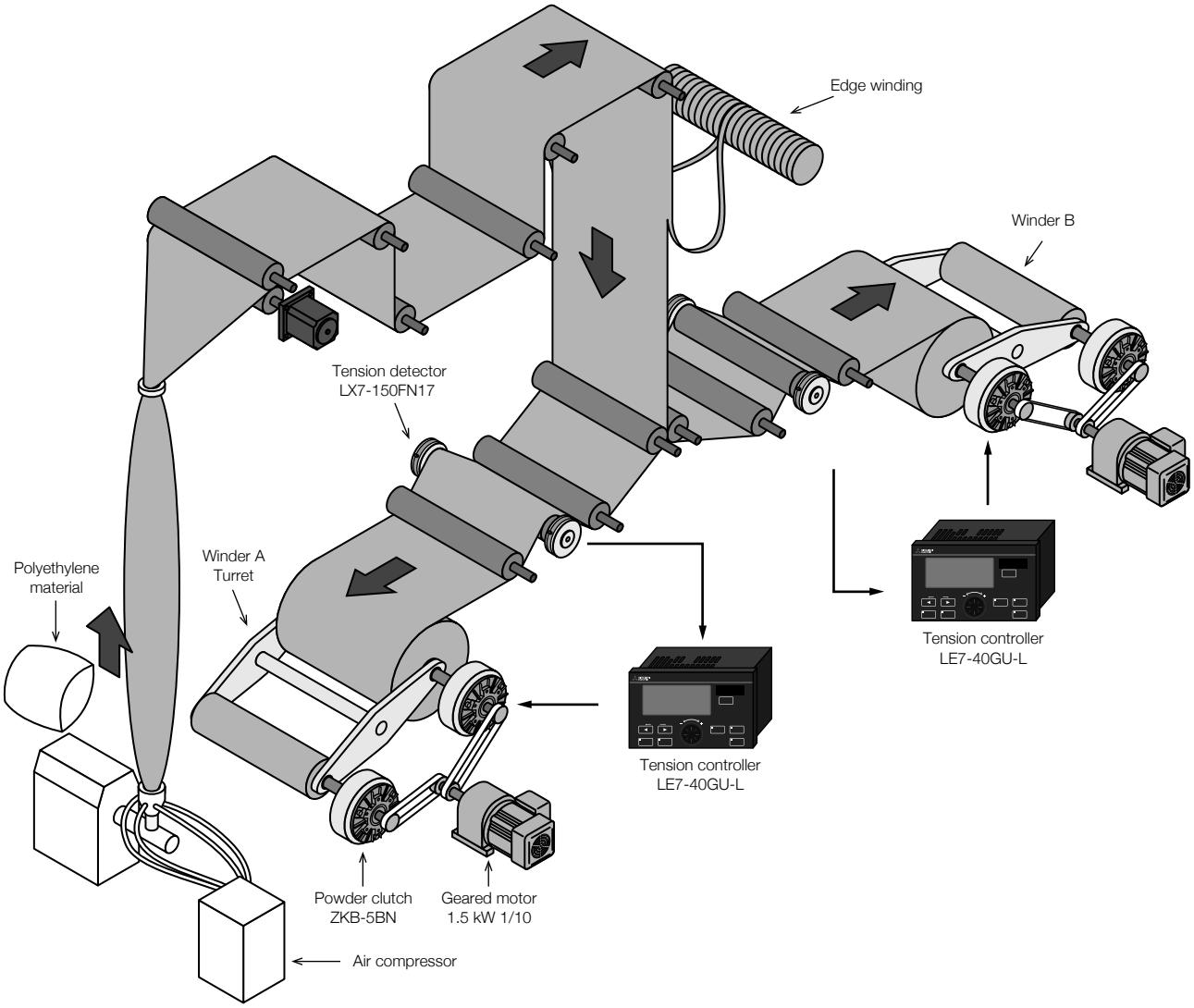

Features

- The inflatable extruder extrudes polyethylene film into a cylindrical shape. The cylindrical film is folded in half, cut at both edges, and shaped into two sheets.
- The material film is cooled in this period, and each of the two sheets is wound by the 2-shaft turret type automatic winder respectively. Tension control equipment is used also in this type of application.
- Because the LE7-40GU-L incorporates the new shaft preset (new shaft predrive output) function, a simple parameter setting procedure enables automatic paper splicing using the 2-shaft turret machine.
- Because the LE7-40GU-L incorporates the cut gain (cut torque) function, film can be cut easily.
- This system is applicable to shaft changeover machines using the powder clutch.

Usage conditions

		Winding
Tension	N	15 to 25
Line speed	m/min	50 to 150
Reel diameter	ϕ	100 to 900

Applicable models

Winding	
Tension controller	LE7-40GU-L × 2 units
Tension detector	LX7-150FN17
Powder clutch	ZKB-5BN (Forced air cooling)
Geared motor	1.5 kW 1/10

Protective element	
Commutation diode	200 VA 5 A
Protective resistor	10 W 47 Ω

When the reel is changed over between two shafts, the powder clutch is changed over by the external contact. Make sure to install the protective diode and resistor in parallel with two powder clutches.

8-8 Multiple cutter

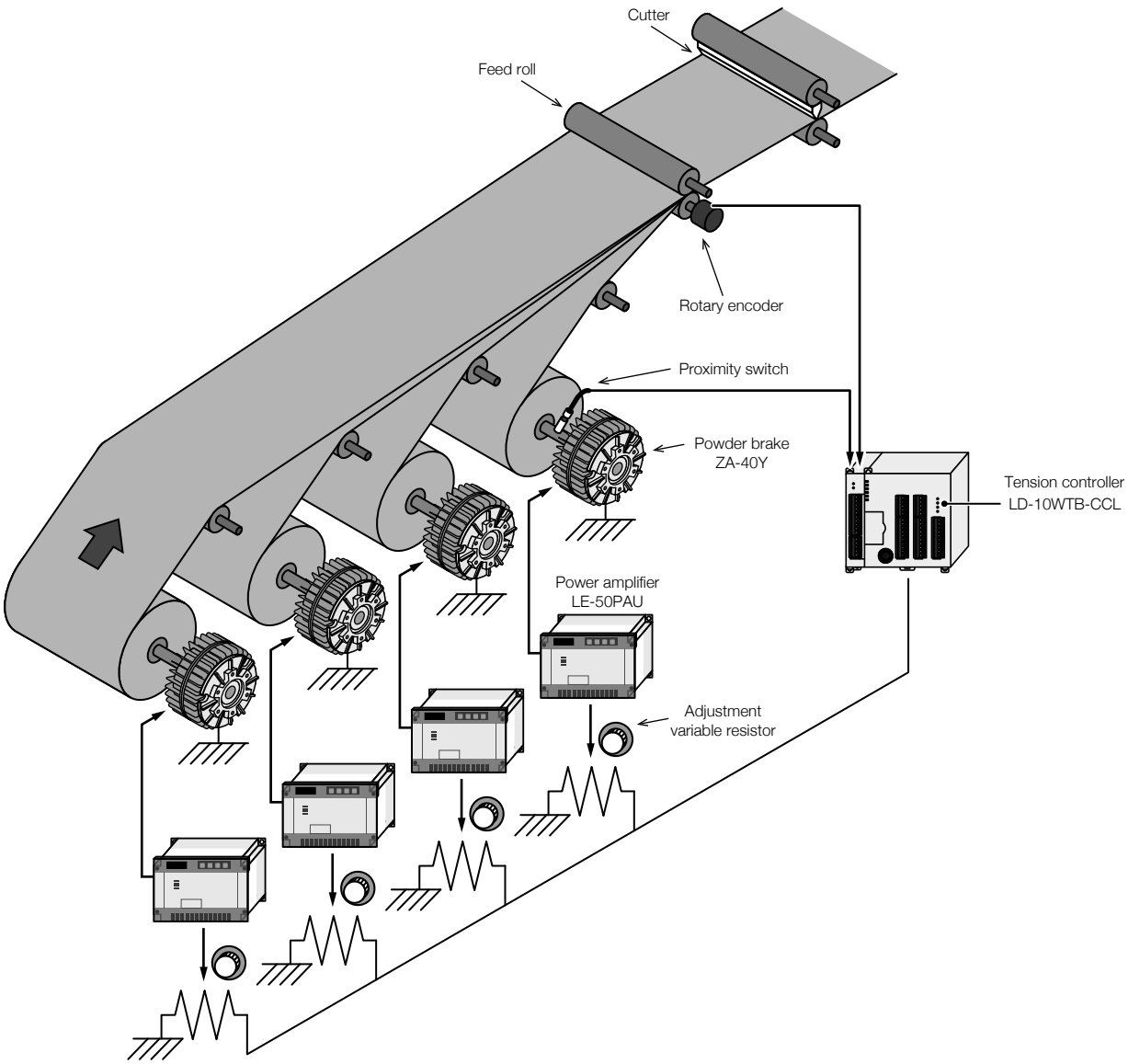

Features

- Because several sheets of paper are cut all at once, the tension of every sheet is kept constant to reduce the dimensional misalignment.
- The reel diameter is detected in the representative reel, and four powder brakes are controlled.
- The diameter of the four reels in the unwinding section must be the same.
- Adjustment variable resistor are used to fine-adjust the tension of each shaft.
- This system is applicable to multi-shaft unwinding in the sizing machine, etc.

Usage conditions

		Winding
Tension	N	300 to 500
Line speed	m/min	60 to 100
Reel diameter	ϕ	100 to 1200

Material	Paper

Applicable models

Winding	
Tension controller	LD-10WTB-CCL
Power amplifier	LE-50PAU × 4 units
Powder brake	ZA-40Y × 4 units

8-9 Slitter (1)

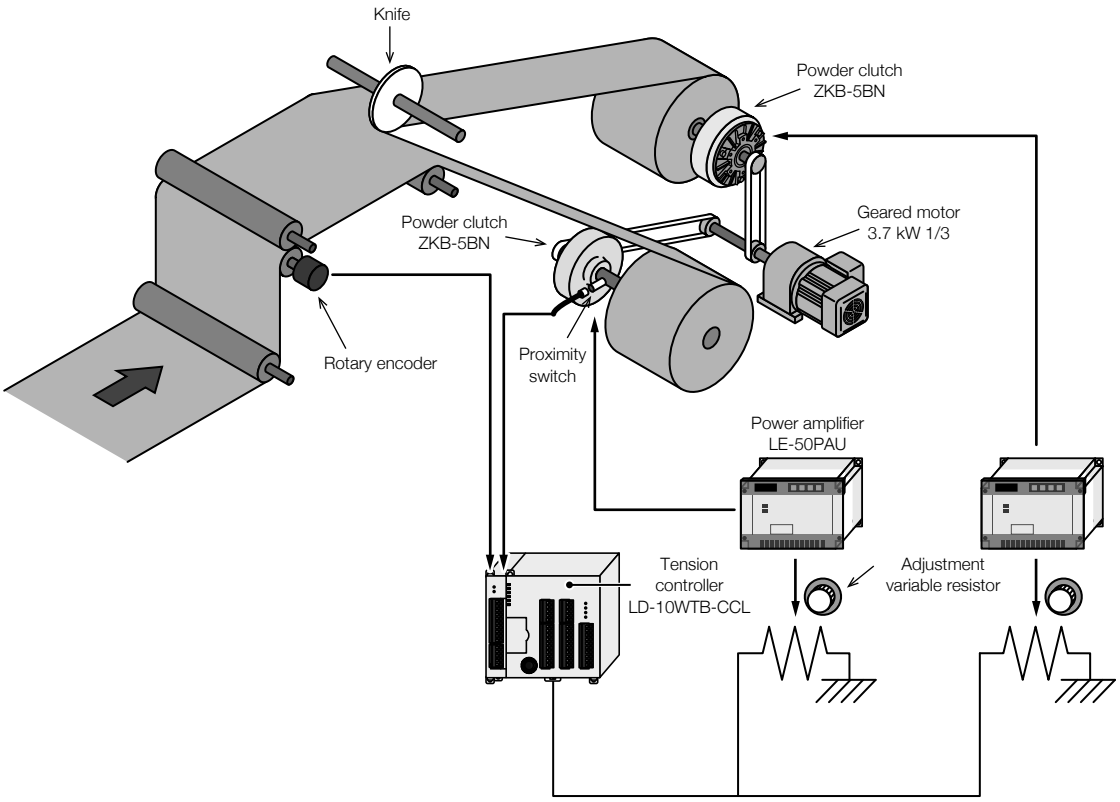

Features

- This system is used when the material is slit by the knife and wound by multiple shafts, and the tension of each shaft is controlled at the same time.
- The proximity switch and pulse generator are connected directly to the representative reel shaft and roll shaft, the pulses from these shafts are input to the tension controller, and then the reel diameter is calculated in the calculation circuit built into the tension controller. This system adopts open-loop control, and hunting does not occur.
- Adjustment variable resistor are used together to eliminate the difference in tension caused by dispersion in the material width among the shafts and by dispersion in the clutch torque.
- This system is applicable to any type of simultaneous multi-shaft winding.

Usage conditions

		Winding
Tension	N	100 or less
Line speed	m/min	100 or less
Reel diameter	ϕ	110 to 400

Material	Film

Applicable models

	Winding
Tension controller	LD-10WTB-CCL
Power amplifier	LE-50PAU × 2 units
Powder clutch	ZKB-5BN (Forced air cooling)
Geared motor	3.7 kW 1/3

8-10 Laminator

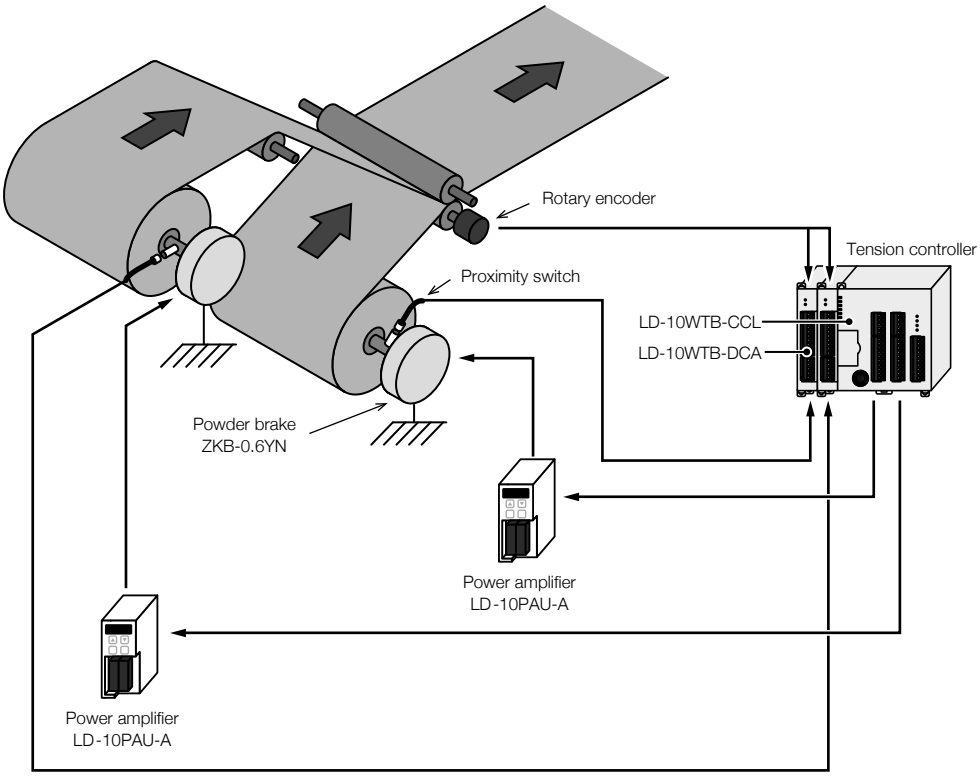

Features

- The reel diameter is detected in one representative shaft, and unwinding is controlled simultaneously in multiple shafts.
- This system is designed for general 2-shaft unwinding control in such a configuration that the reel diameter calculation adapter LD-10WTB-DCA is connected to the tension controller LD-10WTB-CCL.
- This system is applicable to any type of simultaneous multi-shaft unwinding.

Usage conditions

		Unwinding
Tension	N	20 to 200
Line speed	m/min	2 to 20
Reel diameter	ϕ	110 to 400

Material	Film

Applicable models

Unwinding	
Tension controller	LD-10WTB-CCL + LD-10WTB-DCA
Power amplifier	LD-10PAU-A × 2 units
Powder brake	ZKB-0.6YN

8-11 Rolling machine

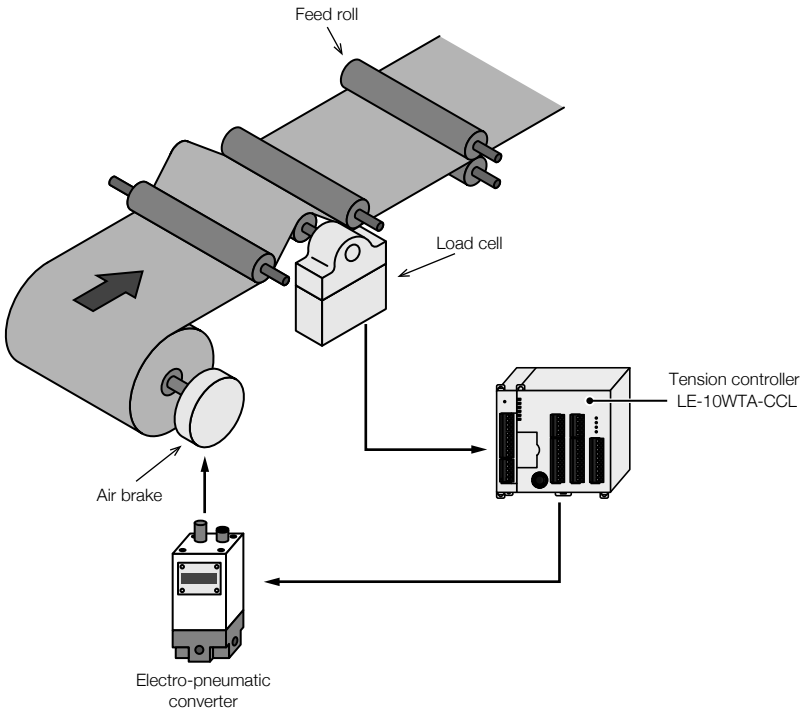

Features

- The air brake and load call control the tension for unwinding at high tension of metallic materials such as thin steel plate and aluminum plate.
- Because the tension is high, a commercial load cell is used as the detector, and the detected load is input to the tension controller.
- This system is applicable also to winders requiring high tension.

Usage conditions

		Unwinding
Tension	N	10000 or less
Line speed	m/min	70 or less
Reel diameter	ϕ	250 to 1200

Material	Thin steel plate

Applicable models

Unwinding	
Tension controller	LE-10WTA-CCL
Air brake	Product manufactured by another company
Electro-pneumatic converter	Product manufactured by another company

8-12 Film cleaning machine

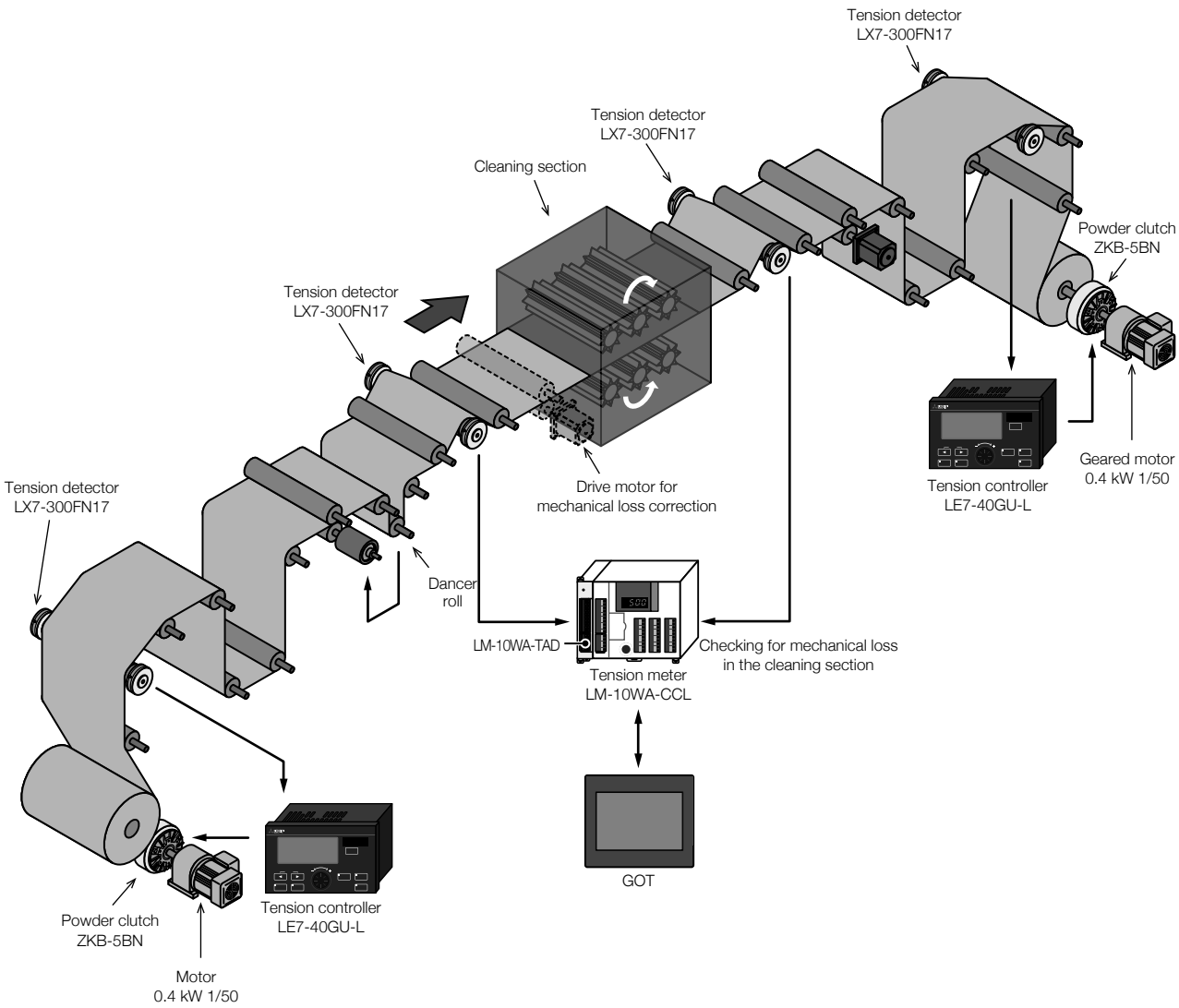

Features

- Because the speed is low, reverse rotation input of the powder clutch is used for unwinding to stabilize the tension.
- The tension is monitored before and after the cleaning section to check for mechanical loss.
  (When there is considerable mechanical loss, a drive motor for mechanical loss correction is installed.)
- Because the tension is low, the dancer roll is used to apply the tension.

Usage conditions

		Unwinding	Winding
Tension	N	20 to 200	20 to 200
Line speed	m/min	0.1 to 6	0.1 to 6
Reel diameter	ϕ	Max. 400	Max. 400

Thickness	100 to 200 μm
Width	Max. 700 mm
Mass	250 kg

Applicable models

Unwinding	
Tension controller	LE7-40GU-L
Tension detector	LX7-300FN17
Powder clutch	ZKB-5BN
Geared motor	0.4 kW 1/50

Winding	
Tension controller	LE7-40GU-L
Tension detector	LX7-300FN17
Powder clutch	ZKB-5BN
Geared motor	0.4 kW 1/50

In-feed area	
Tension meter	LM-10WA-CCL
Tension detector	LX-030TD

8-13 Plating machine

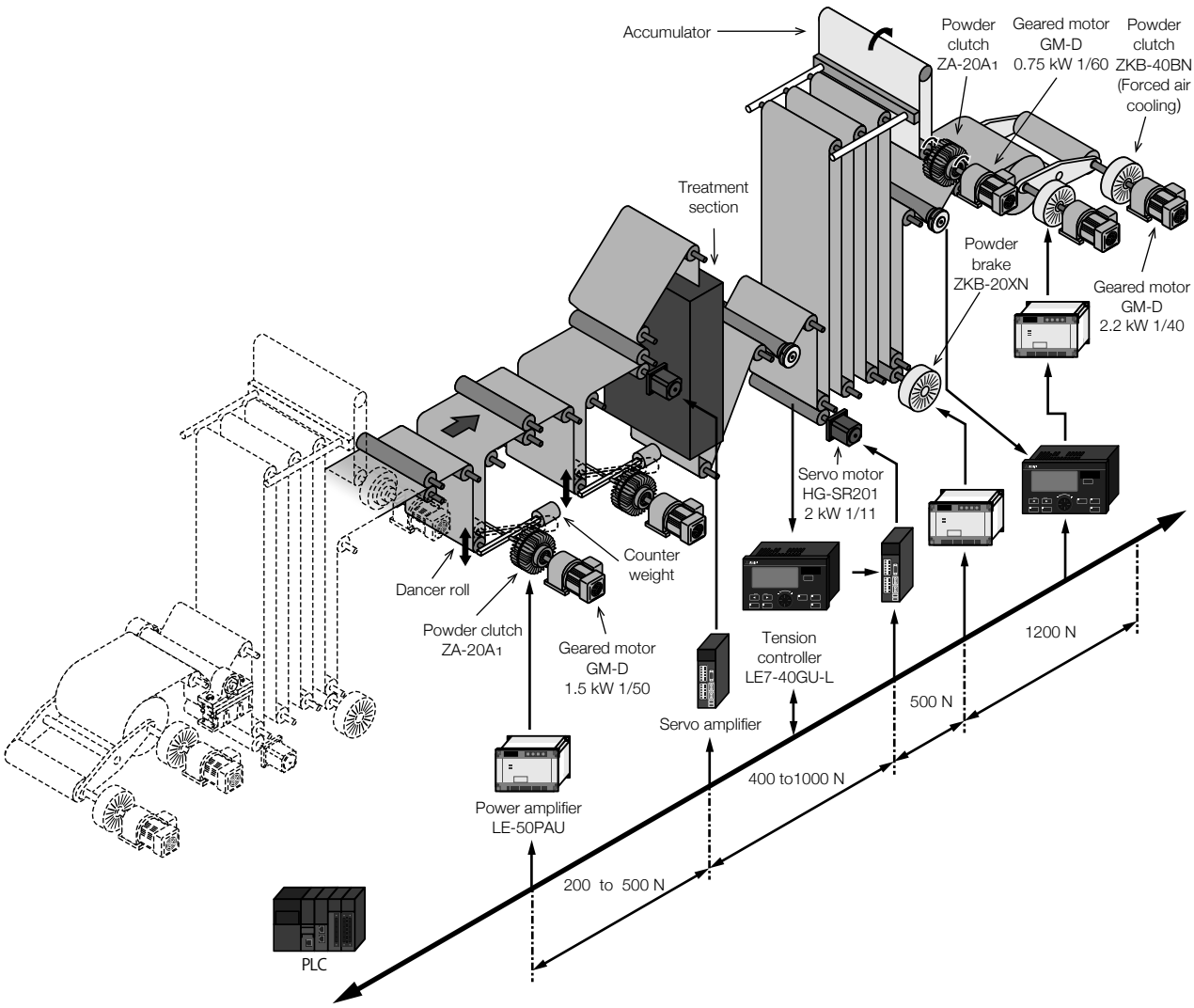

Features

- The powder clutch is used for the accumulator and dancer roll. The tension can be changed by setting the power amplifier.
- Two shafts are switched over using the stop roll in winding, and plating can be continued even when the shaft is switched over.

Usage conditions

		Dancer roll area	Out-feed area	Accumulator area	Winding section
Tension	N	200 to 500	400 to 1000	500	1200 or less
Line speed	m/min	5 to 20	5 to 20	5 to 20	5 to 20
Reel diameter	ϕ	100	100	100	75 to 300

Workpiece material	Metallic foil
Thickness	10 μm (Initial value) 410 μm after treatment
Width	Max. 700 mm

Applicable models

Dancer roll area	
Power amplifier	LE-50PAU
Powder clutch	ZA-20A1
Geared motor	1.5 kW 1/50

Accumulator area	
Power amplifier	LE-50PAU
Powder clutch	ZA-20A1
Geared motor	1.5 kW 1/50

Out-feed area	
Tension controller	LE7-40GU-L
Tension detector	LX7-500FN17
Servo motor	HG-SR201
Servo amplifier	MR-J4-200B

Winding	
Tension controller	LE7-40GU-L
Power amplifier	LE-50PAU
Tension detector	LX7-500FN17
Powder clutch	ZKB-40BN
Geared motor	2.2 kW 1/40

8-14 Winder

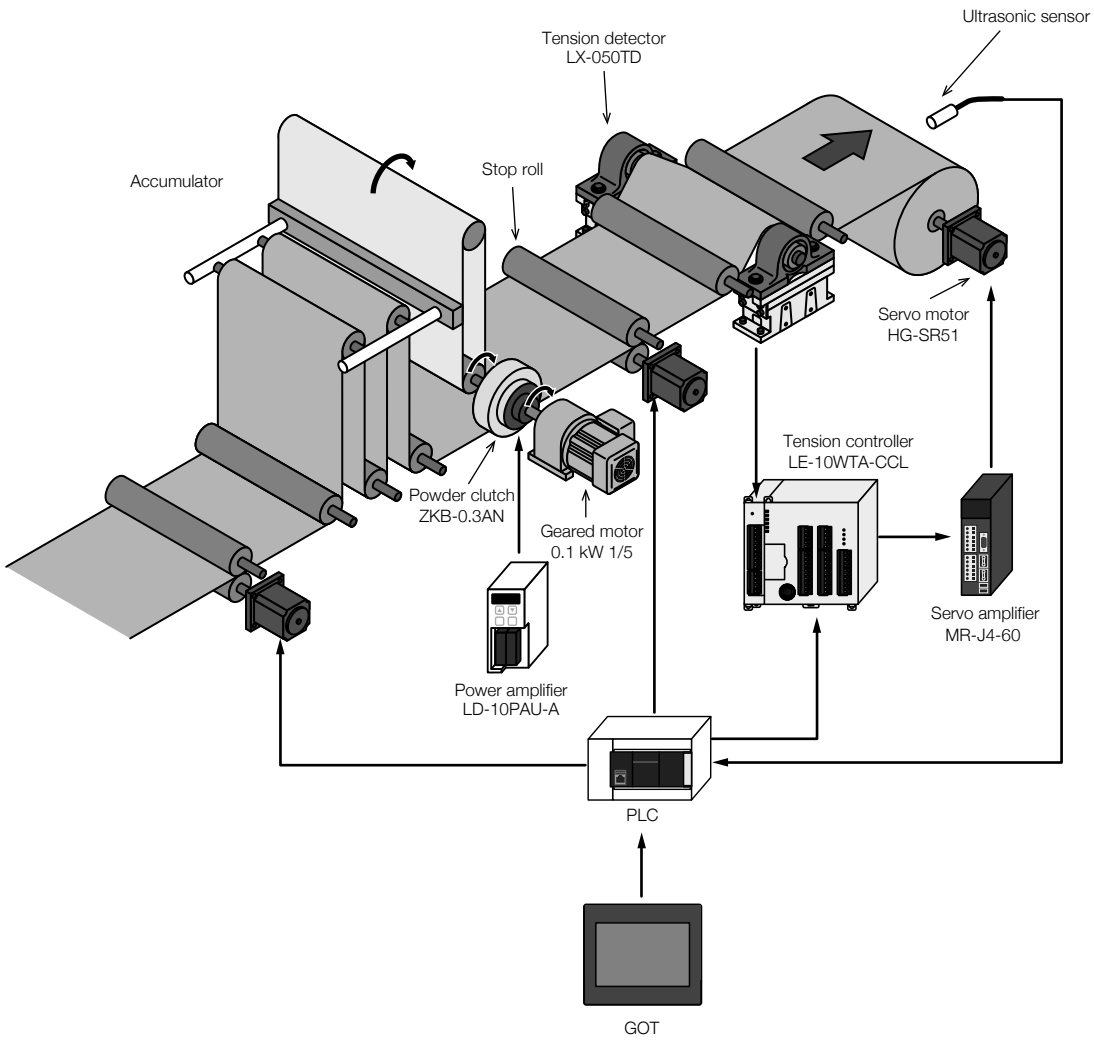

Features

- The PLC receives the reel diameter signal from the ultrasonic sensor, and performs external taper control.
- The shaft is changed over during winding using the stop roll.
- The accumulator controls the tension using the powder clutch.

Usage conditions

		Accumulator	Winding
Tension	N	20 to 50	20 to 50
Line speed	m/min	Max. 75	Max. 75
Reel diameter	ϕ	100	96 to 400

Applicable models

Accumulator	
Power amplifier	LD-10PAU-A
Powder clutch	ZKB-0.3AN
Geared motor	0.1 kW 1/5

Winding	
Tension controller	LE-10WTA-CCL
Tension detector	LX-050TD
Servo motor	HG-SR51
Servo amplifier	MR-J4-60

8-15 Thickness measuring instrument

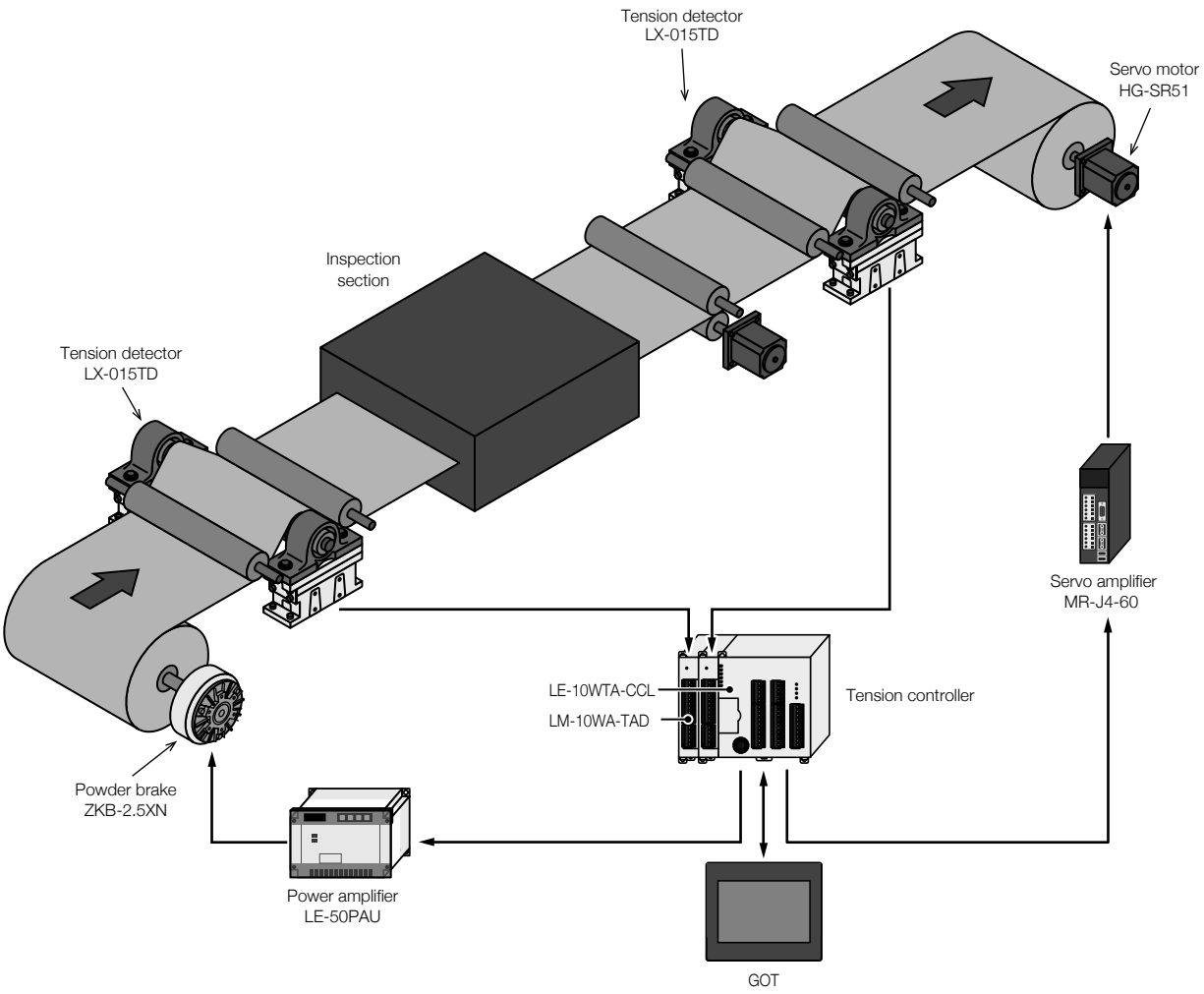

Features

- The tension detector input adapter LM-10WA-TAD is added to the tension controller LE-10WTA-CCL to control both the winding reel shaft and unwinding reel shaft.
- The graphic operation terminal (GOT) is used to set and monitor the tension for winding and tension for unwinding.

Usage conditions

		Unwinding	Winding
Tension	N	44	44
Line speed	m/min	30 to 50	30 to 50
Reel diameter	ϕ	60 to 600	60 to 600

Applicable models

Unwinding	
Tension controller	LE-10WTA-CCL + LM-10WA-TAD (including winding)
Tension detector	LX-015TD
Power amplifier	LE-50PAU
Powder brake	ZKB-2.5XN

Winding	
Servo amplifier	MR-J4-60
Servo motor	HG-SR51

8-16 Steel plate plating line

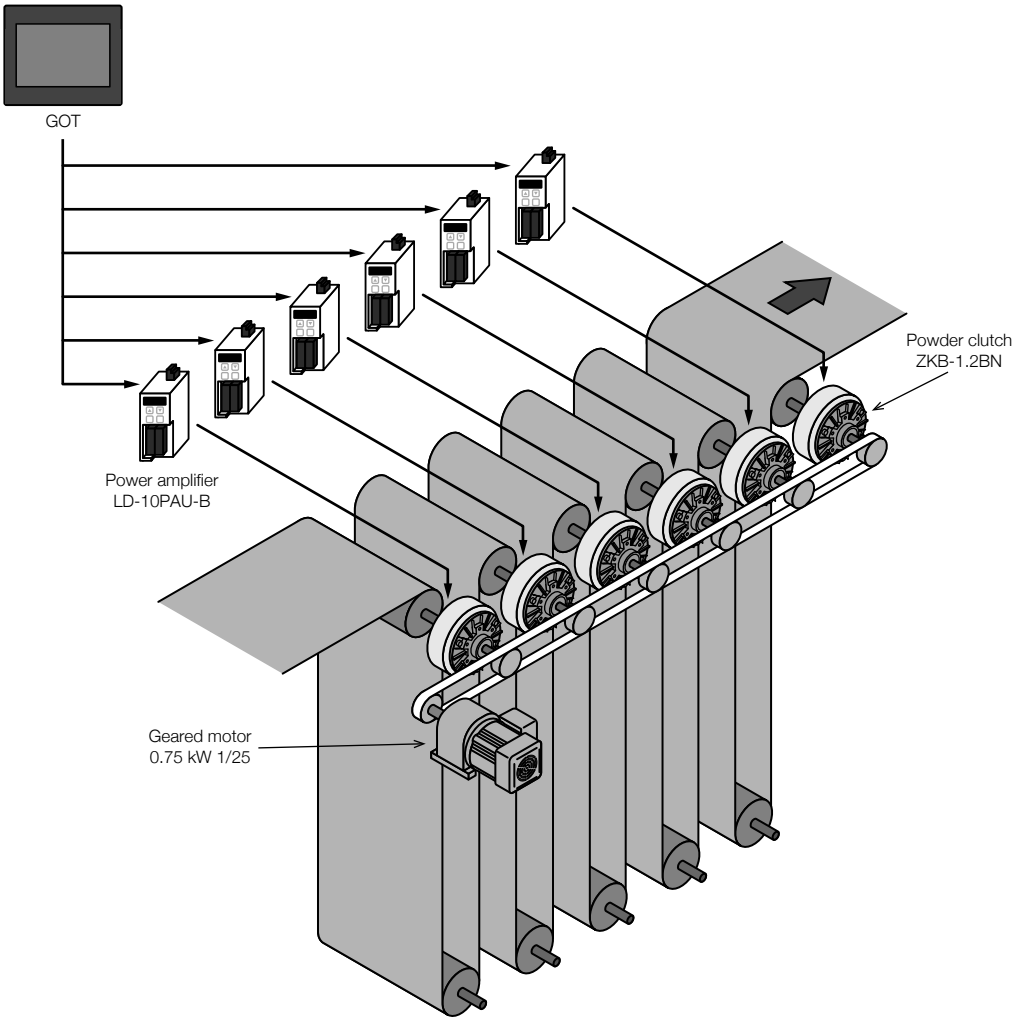

Features

- Because there are many roll shafts, the total mechanical loss is large. To reduce the mechanical loss, a powder clutch is installed in each roll shaft to apply driving corresponding to the mechanical loss and eliminate its effect. This system is effective when there are many shafts but low-tension operation is required.
- Many amplifiers are connected through RS-485 communication, and one graphic operation terminal (GOT) sets the parameters of many amplifiers in a batch.

Usage conditions

Mechanical loss	N	1 to 7
Line speed	m/min	0.5 to 5
Roll diameter	ϕ	250

Applicable models

Powder clutch	ZKB-1.2BN
Power amplifier	LD-10PAU-B
Geared motor	0.75 kW 1/25

8-17 Static electricity eliminating device

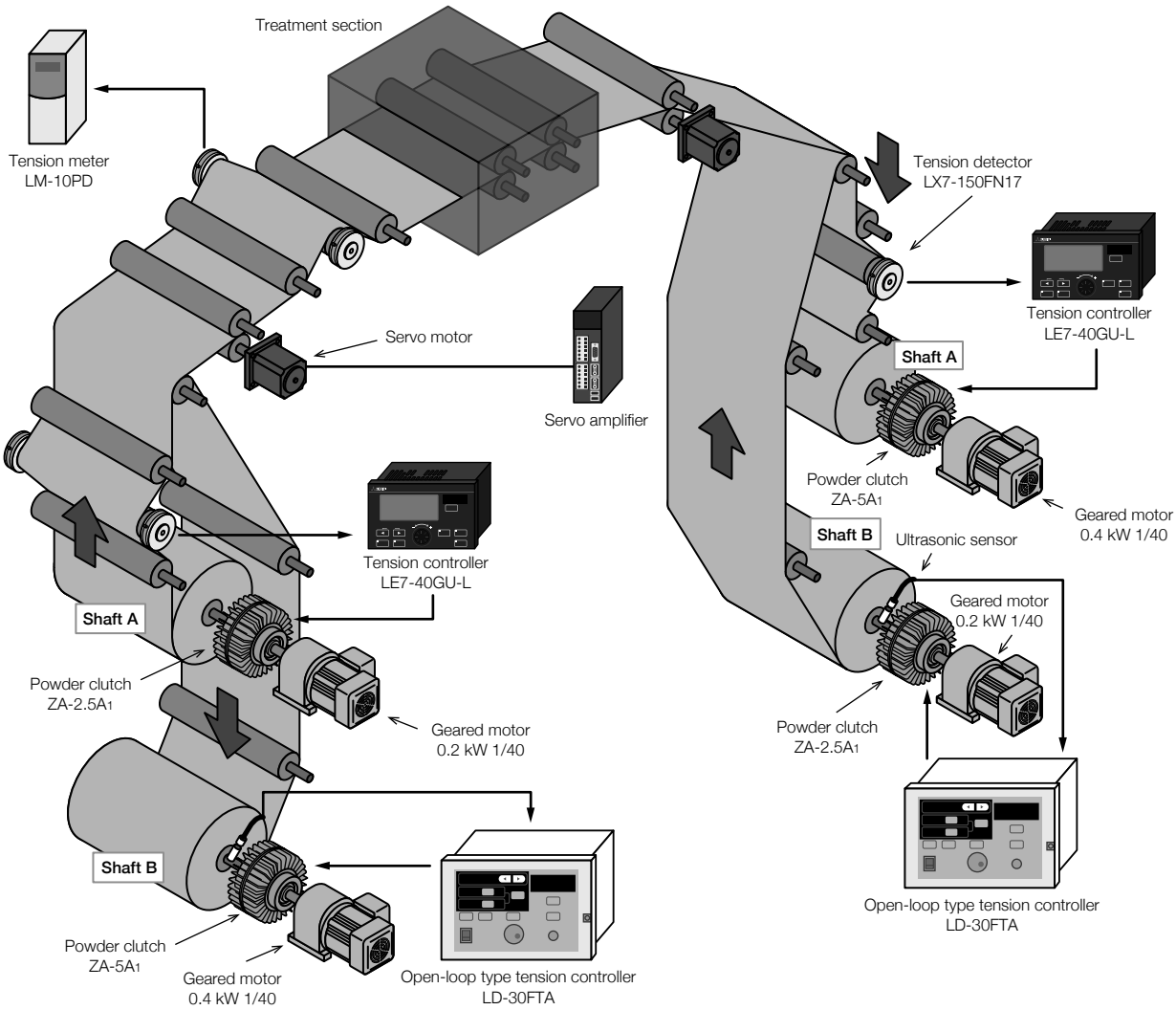

Features

- Because the hunting phenomenon could occur when the reel shaft is rotating at extremely low (rotation) speed if a servo motor is used, a powder clutch is adopted.
- Because the line speed is extremely low, reverse rotation input of the powder clutch is effective in the unwinding section.
- Because the distance between rollers is short in the treatment section, draw control is adopted instead of the dancer roll.

Usage conditions

		Unwinding	Winding
Tension	N	30 to 100	30 to 100
Line speed	m/min	1 to 15	1 to 15
Reel diameter	ϕ	85 to 400	85 to 400

Applicable models

	Unwinding	
Shaft A	Tension controller	LE7-40GU-L
	Tension detector	LX7-150FN17
	Powder clutch	ZA-2.5A1 (Reverse rotation input)
	Geared motor	0.2 kW 1/40
Shaft B	Tension controller	LD-30FTA
	Powder clutch	ZA-2.5A1 (Reverse rotation input)
	Geared motor	0.2 kW 1/40

	Winding	
Shaft A	Tension controller	LE7-40GU-L
	Tension detector	LX7-150FN17
	Powder clutch	ZA-5A1
	Geared motor	0.4 kW 1/40
Shaft B	Tension controller	LD-30FTA
	Powder clutch	ZA-5A1 (Reverse rotation input)
	Geared motor	0.4 kW 1/40

In-feed area	
Tension detector	LX7-150FN17
Tension meter	LM-10PD

8-18 Slitter (2)

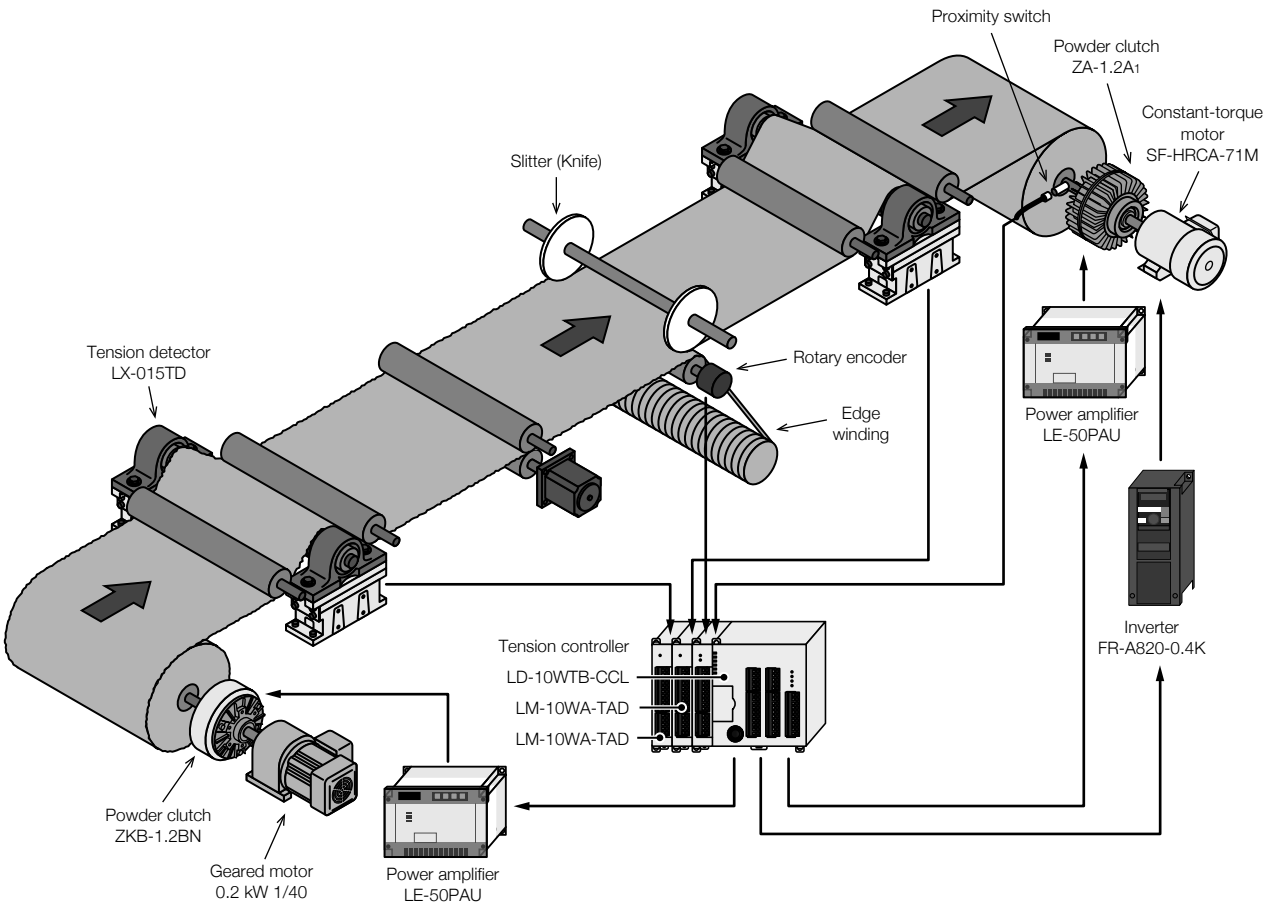

Features

- Constant-slip control is adopted in the winding section to mitigate the increase of the powder clutch capacity.
- External taper control is adopted so that the taper ratio can be changed in accordance with the reel diameter.
- Reverse input is adopted on the unwinding side because the line speed may be low.

Usage conditions

		Unwinding	Winding
Tension	N	10 to 50	10 to 50
Line speed	m/min	5 to 30	5 to 30
Reel diameter	ϕ	96.2 to 600	96.2 to 600

Thickness	0.2 to 1.2 mm
Width	500 to 1200 mm
Mass	Max. 280 kg

Applicable models

Unwinding	
Tension detector	LX-015TD
Power amplifier	LE-50PAU
Powder clutch	ZKB-1.2BN
Geared motor	0.2 kW 1/40

Winding	
Tension controller	LD-10WTB-CCL + LM-10WA-TAD × 2 units or LE-10-WTA-CCL + LM-10WA-TAD + LD-10WTB-DCA
Tension detector	LX-015TD
Power amplifier	LE-50PAU
Powder clutch	ZA-1.2A1
Constant-torque motor	SF-HRCA-71M
Inverter	FR-A820-0.4K

8-19 Laminator

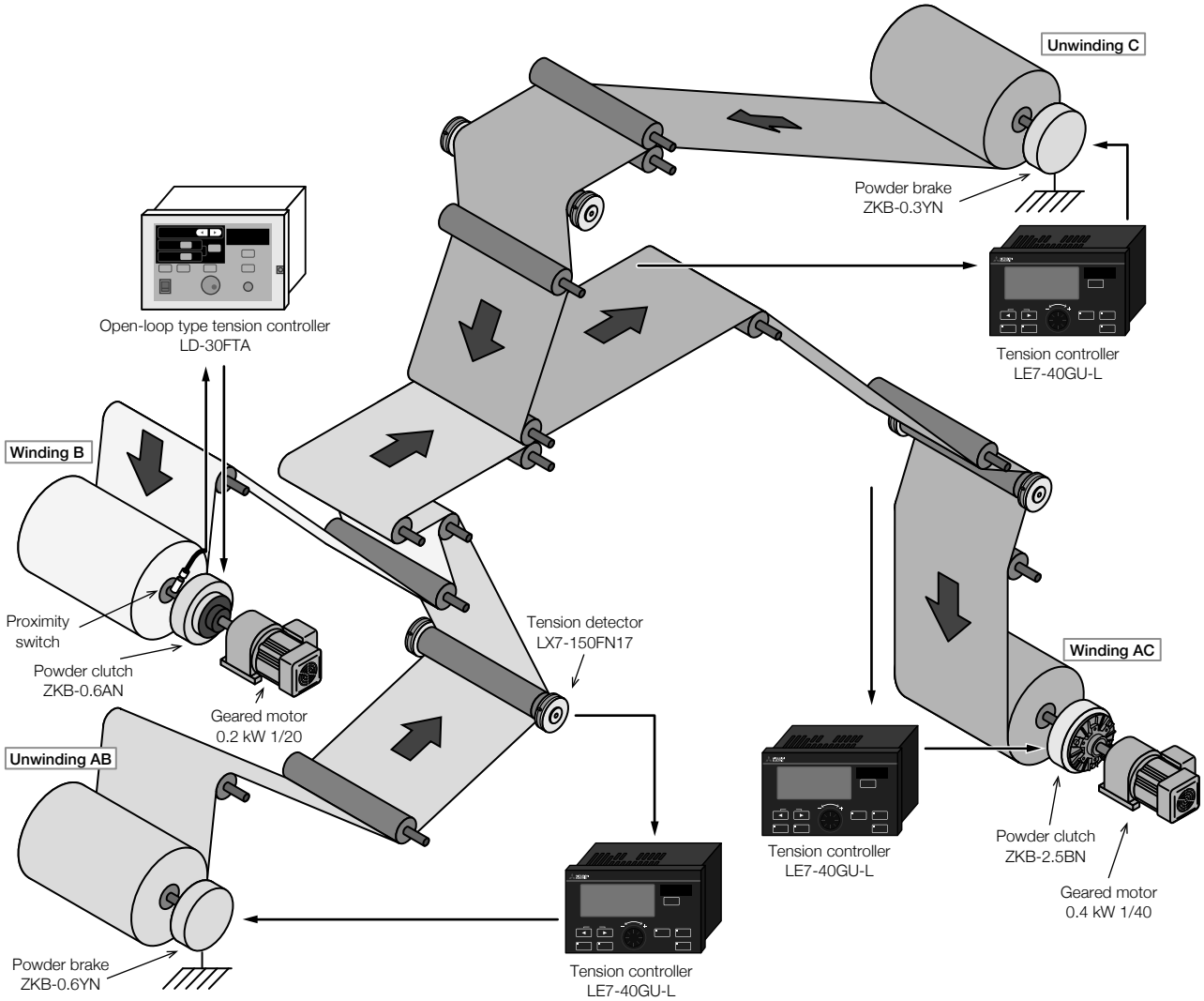

Features

- Feedback control is adopted on the unwinding side to improve the torque stability in the low torque region. (Closed-loop control is recommended in areas whose torque is 5% or less in the powder clutch/brake.)

Usage conditions

		Unwinding	Unwinding	Winding	Winding
		AB	C	B	AC
Tension	N	30 to 100	20 to 50	20 to 50	30 to 100
Line speed	m/min	2 to 8	2 to 8	2 to 8	2 to 8
Reel diameter	ϕ	75 to 450	75 to 250	75 to 250	75 to 450

Applicable models

	Unwinding	
AB Unwinding	Tension controller	LE7-40GU-L
	Tension detector	LX7-150FN17
	Powder brake	ZKB-0.6YN
C Unwinding	Tension controller	LE7-40GU-L
	Tension detector	LX7-150FN17
	Powder brake	ZKB-0.3YN

	Winding	
B Winding	Tension controller	LD-30FTA
	Tension detector	LX7-150FN17
	Powder clutch	ZKB-0.6AN
	Geared motor	0.2 kW 1/20
AC Winding	Tension controller	LE7-40GU-L
	Tension detector	LX7-150FN17
	Powder clutch	ZKB-2.5BN
	Geared motor	0.4 kW 1/40

8-20 Film processing machine

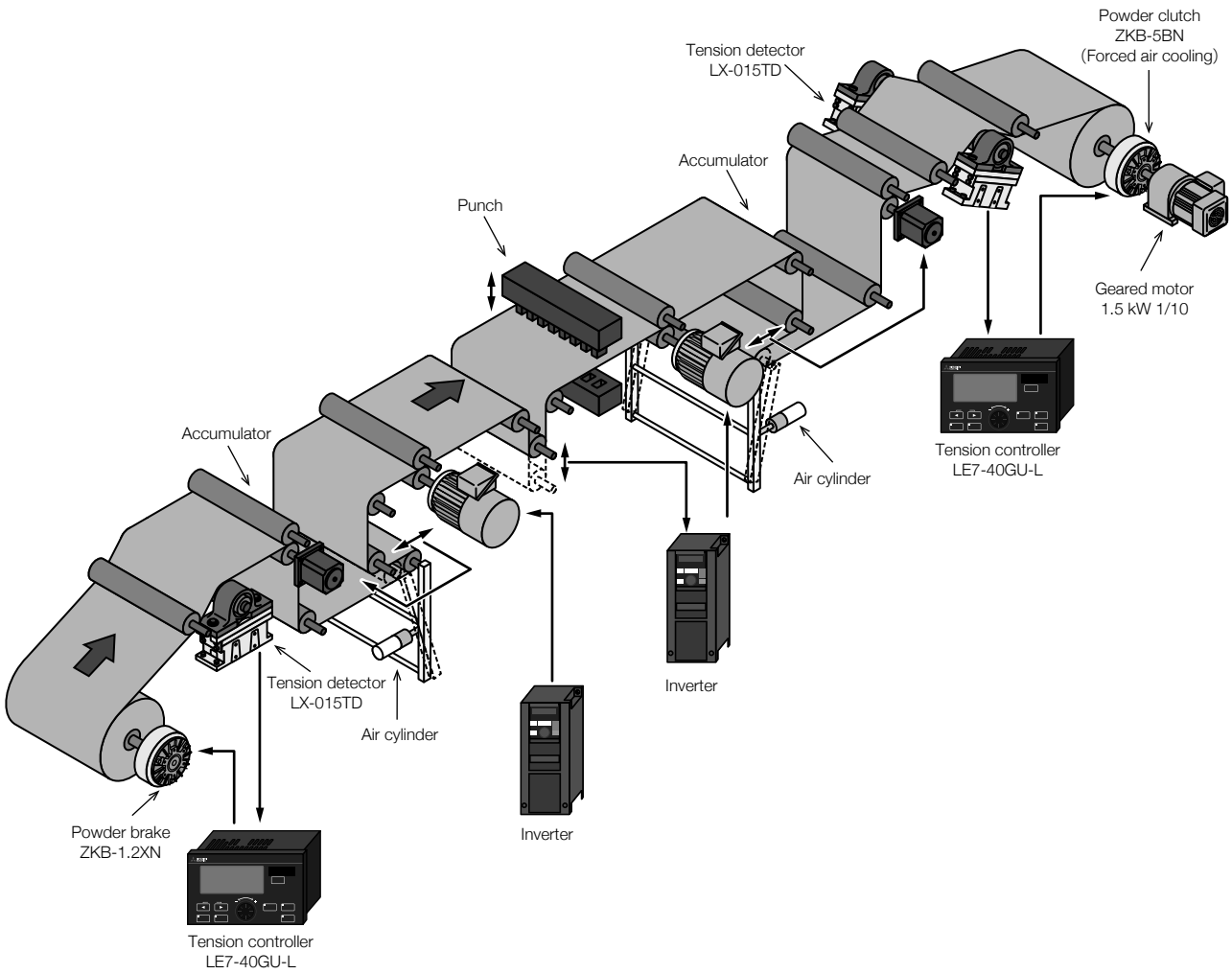

Features

- Because intermittent operation is performed for pressing the film, an accumulator is installed so that the processing does not stop.
- The forced air cooling type powder clutch is adopted in the winding section to improve heat radiation.

Usage conditions

		Unwinding	Winding
Tension	N	75	75
Line speed	m/min	10 to 40	10 to 40
Reel diameter	ϕ	90 to 800	90 to 800

Applicable models

Unwinding	
Tension controller	LE7-40GU-L
Tension detector	LX-015TD
Powder brake	ZKB-1.2XN

Winding	
Tension controller	LE7-40GU-L
Tension detector	LX-015TD
Powder clutch	ZKB-5BN (Forced air cooling)
Geared motor	1.5 kW 1/10

MEMO

Chapter 9

Trouble Examples and Corrective Actions

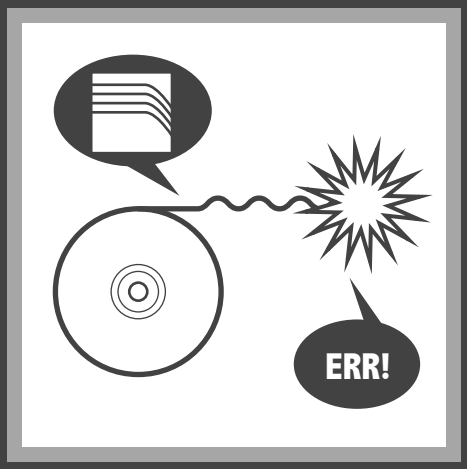

Trouble Examples and Corrective Actions

Trouble Examples and Corrective Actions

	Phenomenon	Countermeasures
Clutch /brake	Though the powder clutch/brake is used at the rated or lower torque, its temperature becomes extremely high. The surface temperature becomes 100°C or more.	Overload may be applied. The powder clutch/brake may be unavailable even if the used torque does not exceed the rated torque. It is necessary to check the heat dissipation (which is the product of the torque and slip rotation speed) based on the usage conditions. It is necessary to restrict the torque when the slip rotation speed is high. Refer to the catalog for the allowable heat dissipation.
	The powder brake wobbles (does not rotate smoothly) at low speed. This phenomenon often occurs when the reel diameter is large.	The stick slip phenomenon may have occurred in the powder brake. The stick slip phenomenon occurs more often when the reel diameter is large (that is, the load is large and the rotation speed is low), and occurs less often as the reel diameter becomes smaller (that is, the load is small and the rotation speed is high). The stick slip phenomenon occurs easily in the unwinding section (powder brake) when the line speed is low (10 m/min. or less). The countermeasure is to increase the slip rotation speed. It is effective to replace the powder brake with the combination of "powder clutch and reverse rotation motor". Other possible factors on the machine side except the powder brake are the tension of the timing belt and the backlash of the gear. A possible factor on the material side is elongation/shrinkage of the material.
	In the ZA type clutch, the bearing locks early. The idling torque is large.	The coil locking bolts may be overtightened. If the coil locking bolts are overtightened on the mounting plate, excessive thrust load is applied to the bearing. When fixing the coil locking bolts on the mounting plate, provide proper backlash in both the axial direction and the rotation direction so that the thrust load is not applied to the bearing.
Tension controller	The tension is too high at startup in the tension feedback type control. The material breaks off.	Turn on/off the input signal in accordance with operation start/stop of the machine. If the input signal is kept ON, the control output becomes largest at the time of restart, and excessive tension is applied. If the input signal is turned off at a delayed timing when the machine is stopped, the control output may become large and excessive tension may be applied at the time of restart. Turn off the input signal at the same time the machine stops.
	The reel becomes loose when the reel diameter becomes small in open-loop control.	The looseness may be caused by the nonlinear relationship in the small current region between the current and the torque in the powder clutch/ brake. Use the nonlinear correction function of the controller. Though the output voltage change ratio against changes in the reel diameter changes when nonlinear correction is performed, it does not indicate an error.
	The tension increases when the reel diameter becomes small in the unwinding section in automatic control.	The increase may be caused by mechanical loss in the winding reel shaft. Check the control output of the controller. When the control output is "0", the increase is caused by mechanical loss. Major factors of mechanical loss are the bearing, gear, timing belt, etc. of the reel shaft. Mechanical loss tends to be larger with higher gear ratio higher. Reexamination is required, considering countermeasures such as selecting a bearing whose idling torque is small, connecting the reel shaft directly to the elastic coupling without using a gear, decreasing the tension of the timing belt, etc.
	Hunting occurs in the material in feedback control.	Check whether hunting occurs in manual operation. If hunting occurs in manual operation, the factors are vibration, mechanical loss fluctuation, etc. in the machine. Check the machine. If hunting does not occur in manual operation but occurs in automatic operation, the control gain may be high. Adjust the control gain.

	Phenomenon	Countermeasures
Tension detector	The zero point is often deviated though the zero point/span adjustment is completed.	The deviation may be caused by the effect of mounting the tension detector. Major possible factors are as follows: - The detector mounting face is not horizontal. - The detector mounting face height is different between both ends when the detection roller is supported at both ends. - The detection roller is imbalanced. - The detection roller length has changed due to temperature changes.
	The load becomes excessive during span adjustment though the sum of the roll load and tension load is less than the rated load.	The set value of the tension full scale may be improper. - The set value of the tension full scale remains at the default (500 N). - The full-scale tension is too high compared with the actual maximum tension to be controlled. The recommended full-scale tension is approximately 1.2 to 1.5 times the actually controlled tension.

MEMO

Chapter 10

Questions and Answers

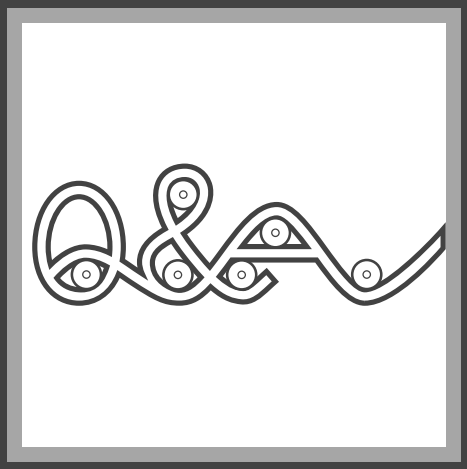

10-1 Frequently asked questions about powder clutches and powder brakes

10-2 Frequently asked questions about tension controllers

10-1 Frequently asked questions about powder clutches and powder brakes

Q1	What is the dispersion of the torque in the powder clutch/brake?	119
Q2	How can we judge the end of life (overhaul timing) of the powder clutch/brake?	119
Q3	Does the power supply unit for the powder clutch/brake have polarity (+ and -)?	119
Q4	Why is the feeling of the shaft weight dispersed when the shaft is rotated after the powder clutch/brake is connected to the machine?	120
Q5	We would like to use the powder clutch/brake with its shaft set vertical.	120
Q6	We would like to use the ZKB-40BN with the mounting plate only on one side.	120
Q7	We would like to use the ZKB-10BN as a brake because we do not have the ZKB-10XN.	120
Q8	What is the proper water temperature in the water-cooling type?	121
Q9	What is the allowable surface temperature of the powder clutch/brake?	121
Q10	We would like to use the powder clutch/brake outdoors.	121
Q11	We would like to use the powder clutch/brake in a vacuum.	122
Q12	We would like to use the powder clutch/brake in a clean room.	122
Q13	What is the upper limit of use of the powder clutch/brake?	122
Q14	Is the rotation direction specified for the powder clutch/brake?	122
Q15	Please explain the life of the powder clutch/brake.	123
Q16	Which is the input/output shaft of the powder clutch?	123
Q17	Which of the input shaft and the output shaft of the powder clutch should be connected to the high-speed rotation side?	124
Q18	Please explain how to install the ZKG-AN type powder clutch.	124
Q19	What is the idling torque of the powder clutch/brake?	124

Q1: What is the dispersion of the torque in the powder clutch/brake?

A1: In catalogs, the standard torque characteristics (representative example) indicate the standard values of new products at the speed "200 r/min". Because powder deteriorates due to aging, the standard characteristics change accordingly. Cope with changes in the torque characteristics by adjusting the current.
The dispersion of the torque at around the rated current is approximately ±10% in a single unit of the product.
The dispersion among products is approximately ±15% from the standard torque characteristics.
It is recommended to design a system such that the current can be adjusted in each powder clutch/brake when operating multiple powder clutches/brakes in parallel.

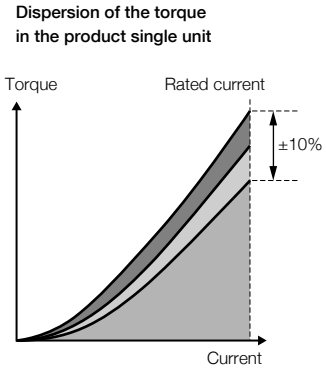

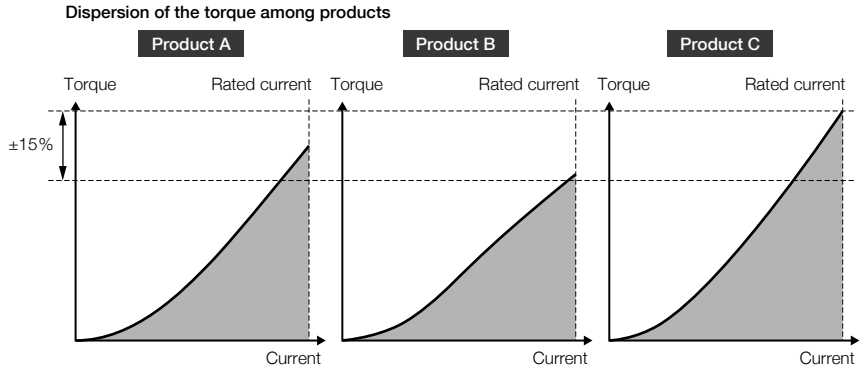

Q2: How can we judge the end of life (overhaul timing) of the powder clutch/brake?

A2: As the powder clutch/brake is used for a long time, oxidation advances in the powder and the generated torque becomes smaller.
As a guideline, consider that the end of life is reached when the torque decreases by 30% or more from the initial value.
If it is difficult to measure the torque, judge the end of life based on the "manufactured product finished status" and the fact that "the torque is insufficient even if the speed setting variable resistor is set to the maximum value".

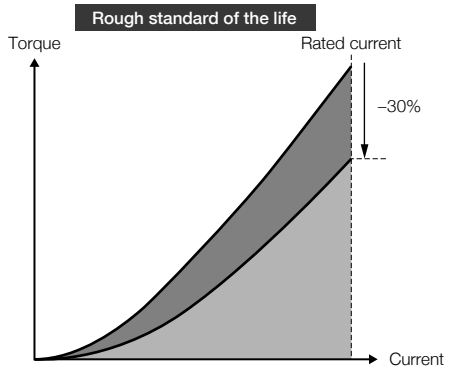

Q3: Does the power supply unit for the powder clutch/brake have polarity (+ and -)?

A3: The powder clutch/brake uses the DC power supply unit, but it does not have polarity.

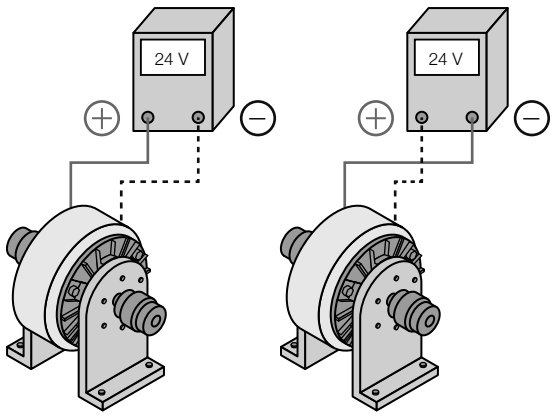

Q4: Why is the feeling of the shaft weight dispersed when the shaft is rotated after the powder clutch/brake is connected to the machine?

A4: The shaft feels heavy because the shaft diameter is small and the powder is distributed unevenly before the running-in operation.
The dispersion is large because the degree of unevenness of the powder distribution varies among products. Check the feeling of the shaft weight again after performing the running-in operation.

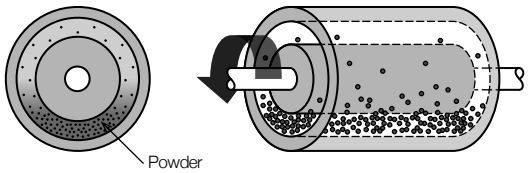

Q5: We would like to use the powder clutch/brake with its shaft set vertical.

A5: Both the powder clutch and the powder brake are designed to be used with the shaft set horizontal in principle.
If the powder clutch/brake is used with its shaft set vertical, the powder will not be distributed evenly, the torque will be lower, fluctuate or become uneven, and the original performance cannot be obtained.

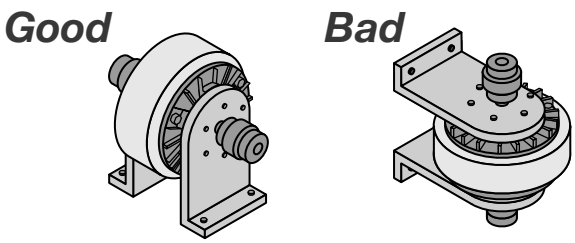

Q6: We would like to use the ZKB-40BN with the mounting plate only on one side.

A6: Install the mounting plate on both sides in principle when using the ZKB-5BN or higher models because the shaft load and powder clutch self weight are applied to the mounting area.

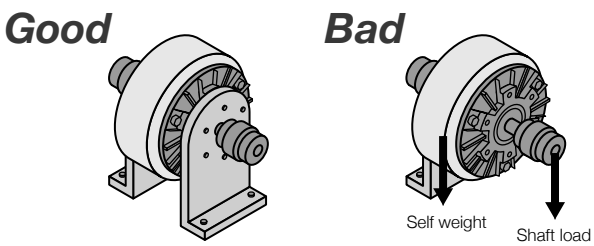

Q7: We would like to use the ZKB-10BN as a brake because we do not have the ZKB-10XN.

A7: The ZKB-10BN can be used as a brake when its output shaft is fixed.

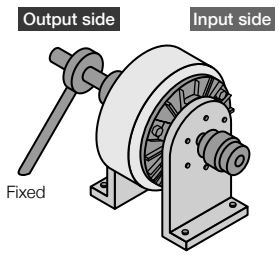

Q8: What is the proper water temperature in the water-cooling type?

A8: Supply water of ordinary temperature.
If the water temperature is low compared with room temperature, condensation may occur due to the difference in temperature.

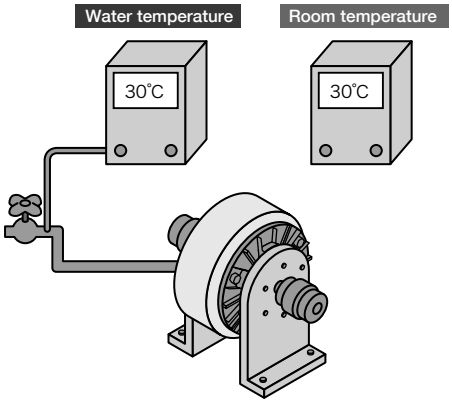

Q9: What is the allowable surface temperature of the powder clutch/brake?

A9: The table below shows the limit surface temperature allowed in continuous operation.
If the surface temperature exceeds the value below, the durability will be considerably deteriorated.

Model	• Natural cooling • Thermo block • Water-cooling type ZKB-WN 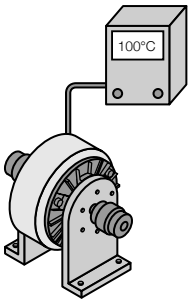	Forced cooling 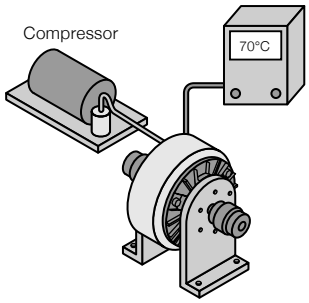
Limit temperature (Rough standard)	100°C or less	70°C or less

Q10: We would like to use the powder clutch/brake outdoors.

A10: The powder clutch/brake is designed to be used inside a factory, and cannot be used outdoors in principle.
If using the powder clutch/brake outdoors, create an environment similar to an indoor environment by attaching a cover if the powder clutch/brake will be exposed to water drops, oil drops, sand dust, salty air, etc. In addition, prevent condensation.

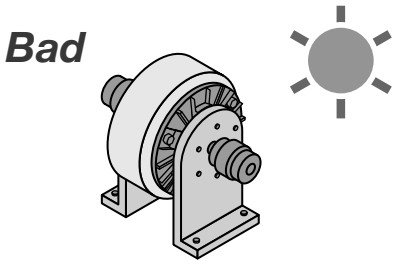

Q11: We would like to use the powder clutch/brake in a vacuum.

A11: It is not possible to use the powder clutch/brake in a vacuum because the slip heat cannot be radiated to the air and the allowable heat dissipation is extremely low.

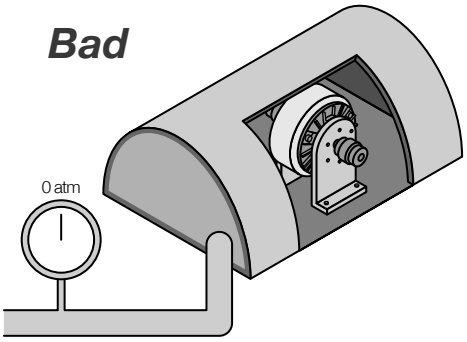

Q12: We would like to use the powder clutch/brake in a clean room.

A12: It is not possible to use the powder clutch/brake in a clean room in principle because it does not have a completely sealed structure and fine powder generated during use may leak.
When covering the powder clutch/brake, cover the entire moving parts because dust is generally generated from other moving parts such as the gear and belt.

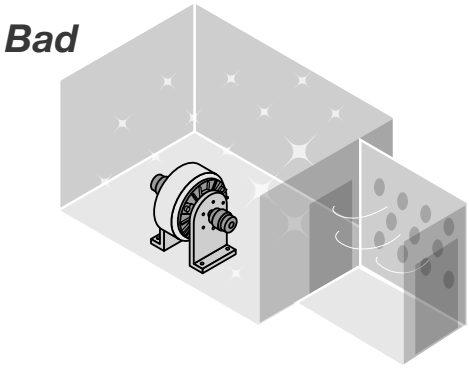

Q13: What is the upper limit of use of the powder clutch/brake?

A13: The rated torque is the upper limit.
Though the powder clutch/brake is designed to produce a higher torque than the rated torque when shipped from the factory in view of deterioration due to aging, the powder clutch/brake is not guaranteed if it is used above the rated torque.

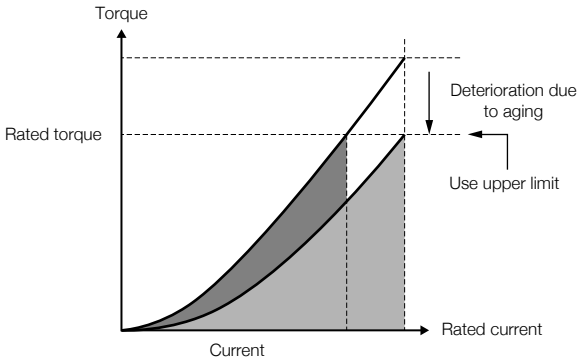

Q14: Is the rotation direction specified for the powder clutch/brake?

A14: The powder clutch/brake can rotate in either direction because rotation does not have directionality.

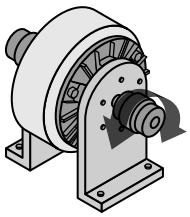

Q15: Please explain the life of the powder clutch/brake.

A15: Powder is oxidized when the powder clutch/brake is used for a long time, and the torque decreases due to the oxidation. When the powder clutch/brake is used for winding or unwinding with the allowable heat dissipation, the life of powder is generally 5,000 to 8,000 hours.
This value is determined assuming that the powder reaches its end of life when the torque decreases until the rated value at the rated current. The life is longer if the powder clutch/brake is used at a torque lower than the rated torque because powder can be used continuously.
As a guideline, consider that the powder has reached its end of life and the powder clutch/brake requires overhaul when the torque decreases by 30% or more from the initial value.
If it is difficult to measure the torque, judge the end of life based on the "manufactured product finished status" and the fact that "the torque is insufficient even if the speed setting variable resistor is set to the maximum value".
The powder life can be extended if the powder clutch/brake is used with sufficient margin from the allowable heat dissipation. For example, if the powder clutch/brake is used with the heat dissipation at 50% of the allowable value, the powder life may be twice or more.
On the contrary, if the powder clutch/brake is used with the heat dissipation above the allowable value, the oxidation of powder may worsen drastically, the decrease of torque may be accelerated, and parts may be damaged.
Even when the heat dissipation is the same, the powder life tends to be short if the slip rotation speed is continuously high. Set the system so that the slip rotation speed becomes as low as possible.

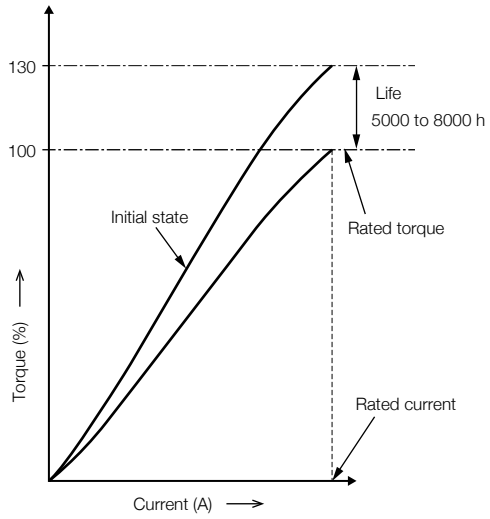

Q16: Which is the input/output shaft of the powder clutch?

A16: "IN (input side)" and "OUT (output side)" are indicated on the product nameplate.
The nameplate attached on the outer periphery of the product indicates the information required to control the product.

Q17: Which of the input shaft and the output shaft of the powder clutch should be connected to the high-speed rotation side?

A17: Connect the input side (IN) to the high-speed rotation side, and connect the output side (OUT) to the low-speed rotation side. Connecting the input side (IN) to the high-speed rotation side leads to stable torque and long powder life.
Powder is filled between two rotating bodies.
When each rotating body is rotated individually, powder moves as follows:

- When the input side is rotated
  Powder receives the centrifugal force from the input side, adheres on the inner circumference on the input side, and is distributed stably.
- When the output side is rotated
  Powder receives the centrifugal force from the output side, and scatters from the output side.
  Because powder is always moving, it is distributed unevenly.

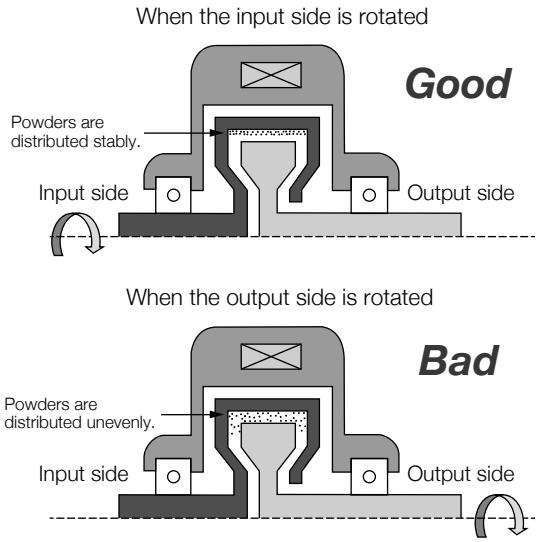

Q18: Please explain how to install the ZKG-AN type powder clutch.

A18: The ZKG-AN type powder clutch should be handled carefully because its input shaft and output shaft are different from those of other types.
In the ZKG-AN, outputs are provided on the left and right sides. Select either one in accordance with the equipment to be combined.

Target models:
ZKG-5AN, ZKG-10AN, ZKG-20AN and ZKG-50AN

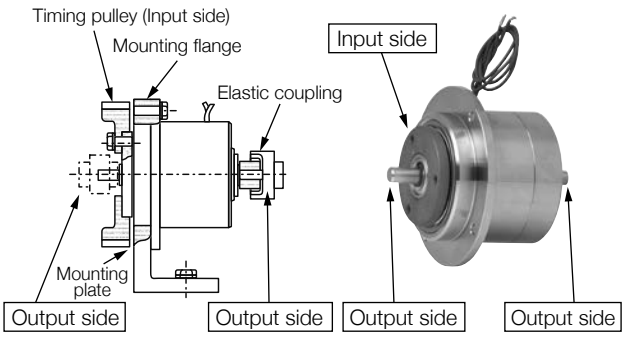

Q19: What is the idling torque of the powder clutch/brake?

A19: The idling torque refers to the drag torque which is generated by powder, bearings, etc., and is generated even while the power is OFF.
The idling torque is 1 to 10% of the rated torque. The actual value varies depending on the model. Refer to the corresponding manual and catalog for details.
Because the powder clutch/brake cannot output a torque smaller than the idling torque, consider the idling torque also when selecting a powder clutch/brake to be used.

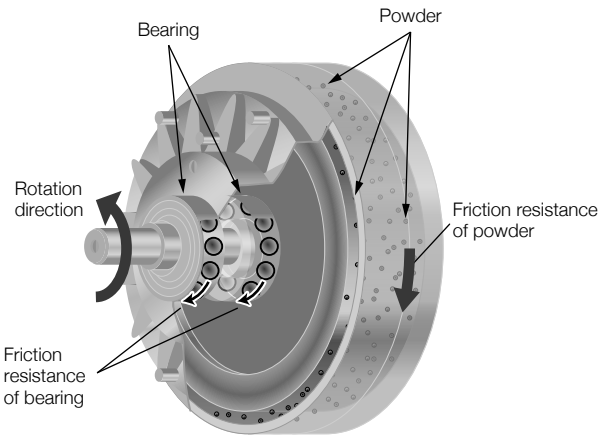

10-2 Frequently asked questions about tension controllers

Q1	Is it possible to use the existing power supply unit even if the powder clutch/brake model is changed?	126
Q2	What will happen if the output terminals are short-circuited in the controller and manual power supply unit?	126
Q3	Can one power supply unit be used for multiple powder clutches/brakes?	127
Q4	We would like to indicate the tension while using the manual power supply unit or open-loop type controller.	127
Q5	The length of the cable (7 m in the non-explosion-proof specifications, 20 m in the explosion-proof specifications) supplied as an accessory of the tension detector is insufficient. Can it be extended?	128
Q6	What is a hinge of the tension detector?	128
Q7	Why is the tension detector not displaced even when a load is applied?	128
Q8	Why do torque fluctuations and hunting occur (especially in the low torque region)?	129
Q9	Why does the tension not increase immediately after the line driving is started in winding control using the powder clutch?	129
Q10	Why does the tension increase as the reel diameter becomes smaller on the unwinding side in closed-loop tension control?	130
Q11	Why does the tension easily decrease when the reel diameter is small in open-loop control?	130

Q1: Is it possible to use the existing power supply unit even if the powder clutch/brake model is changed?

A1: The existing power supply unit can be used when the rated current of the newly adopted powder clutch/brake is smaller than the current capacity of the power supply unit.

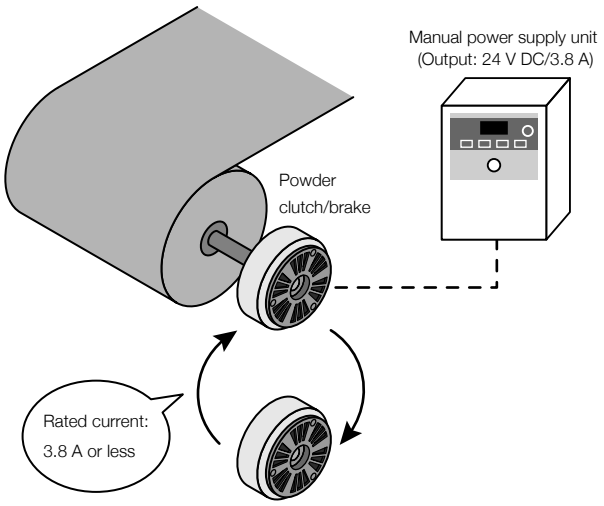

Q2: What will happen if the output terminals are short-circuited in the controller and manual power supply unit?

A2: The short-circuit protection circuit operates.
Release the short-circuit area, turn off the power, wait for 30 seconds, and then turn on the power again to recover the system.

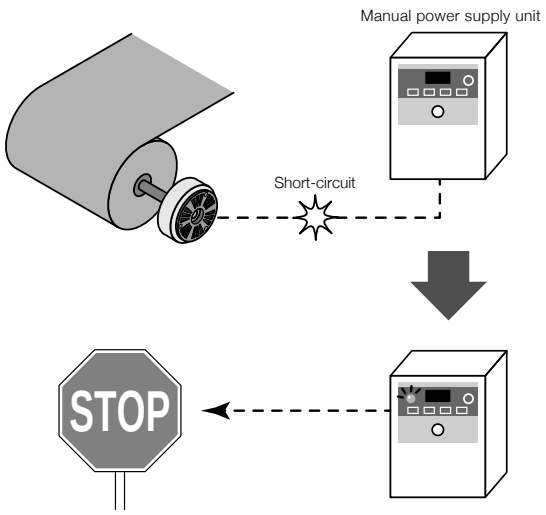

Q3: Can one power supply unit be used for multiple powder clutches/brakes?

A3: One power supply unit can be used for multiple powder clutches/brakes provided the rated current of the powder clutch/brake multiplied by the number of powder clutches/brakes does not exceed the current capacity of the power supply unit.
However, the torque may be different among the powder clutches/brakes used together even if the output is the same because the performance is not equivalent among powder clutches/brakes.

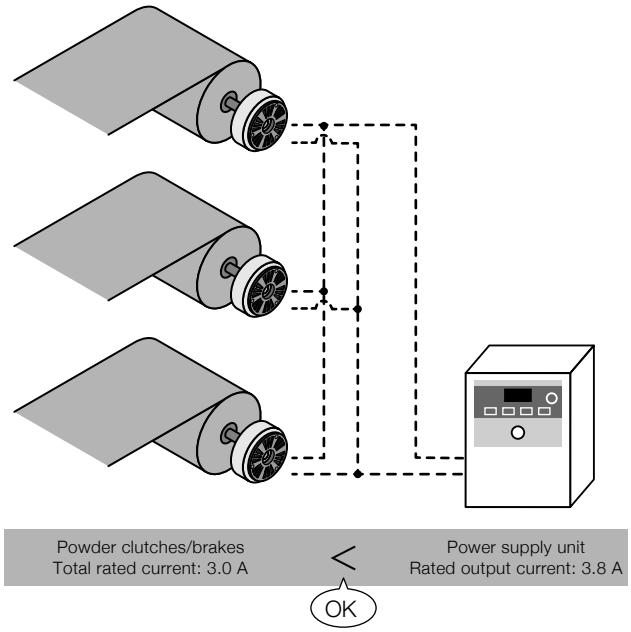

Q4: We would like to indicate the tension while using the manual power supply unit or open-loop type controller.

A4: The manual power supply unit and open-loop type controller cannot indicate the tension.
A tension detector and tension meter are required separately in order to indicate the tension.

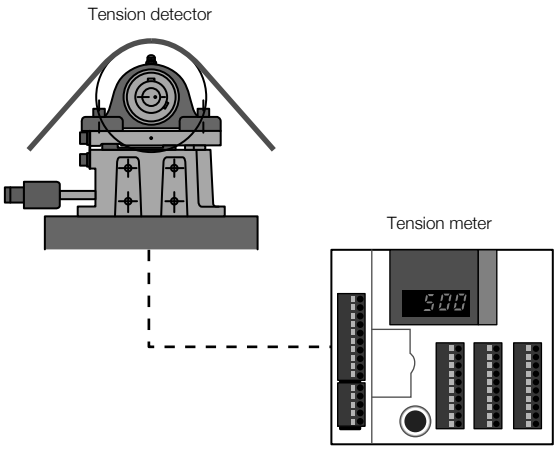

Q5: The length of the cable (7 m in the non-explosion-proof specifications, 20 m in the explosion-proof specifications) supplied as an accessory of the tension detector is insufficient. Can it be extended?

A5: An optional extension cable (50 m) is available.
Contact your sales agent.

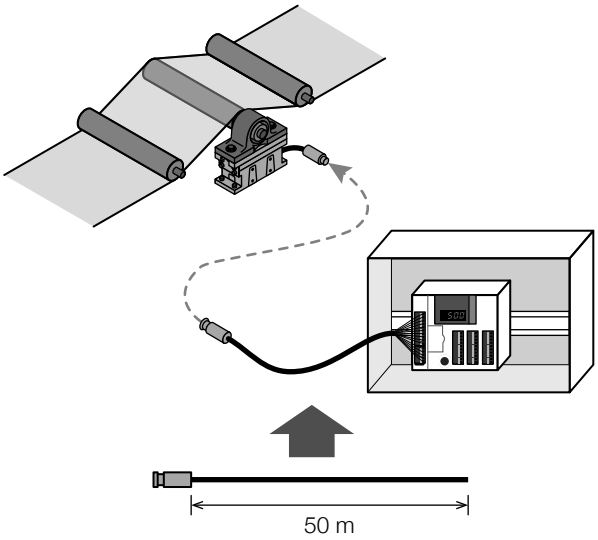

Q6: What is a hinge of the tension detector?

A6: A flat spring supported on only one side is incorporated in the tension detector, and its bend is detected.
The supporting point of the flat spring is called a hinge.
If the resultant force of the tension faces the hinge direction, the flat spring bends by less than the degree corresponding to the actual tension, and the accuracy of tension detection is poor. This should be considered when selecting the tension detector.

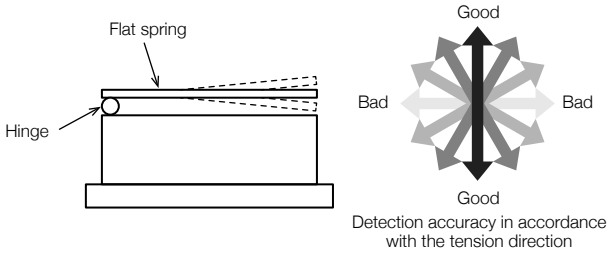

Q7: Why is the tension detector not displaced even when a load is applied?

A7: The pillow block mounting bolts may be interfering with the housing.
As a countermeasure, use shorter bolts to prevent interference.

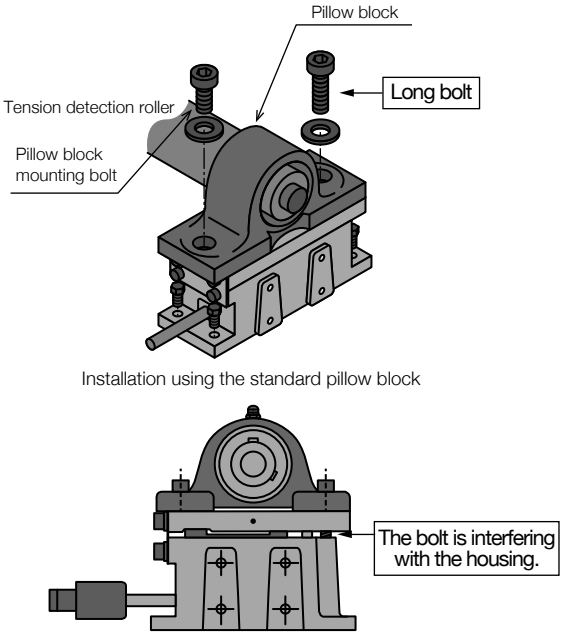

Q8: Why do torque fluctuations and hunting occur (especially in the low torque region)?

A8: The mechanical loss may have some effect.
As a countermeasure, it is necessary to reduce the mechanical loss.
Major causes of mechanical loss are the sliding resistance of the bearing which supports the reel shaft and the gear installed between the reel shaft and the brake.
The mechanical loss tends to increase with higher gear ratio.
Because the mechanical loss is not constant but fluctuates, it may cause tension fluctuations and hunting.
Hunting can occur easily in the low torque region (where the output voltage is low) because the reel shaft torque is affected considerably by the torque caused by the mechanical loss.

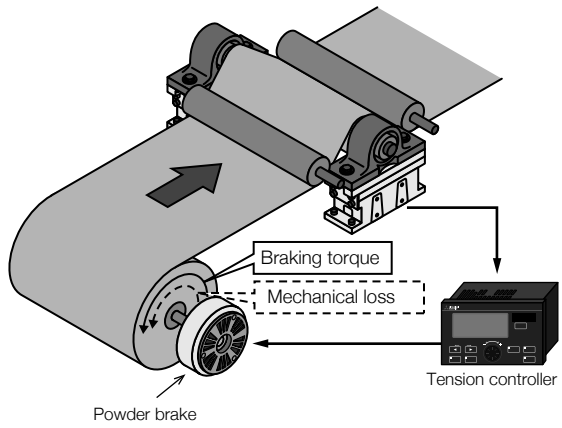

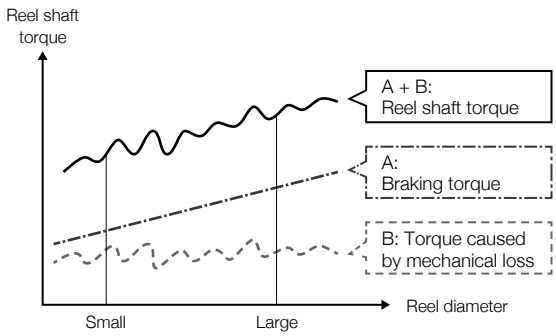

Q9: Why does the tension not increase immediately after the line driving is started in winding control using the powder clutch?

A9: The material may have been slack when the machine was stopped.
As a countermeasure, drive the winding motor in advance before driving the machine main motor so that the material is not slack when the tension controller is started.

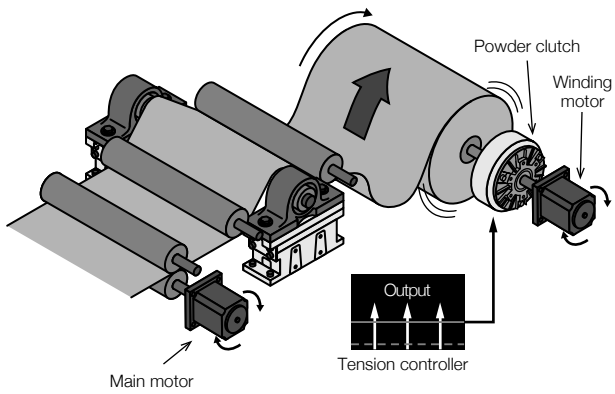

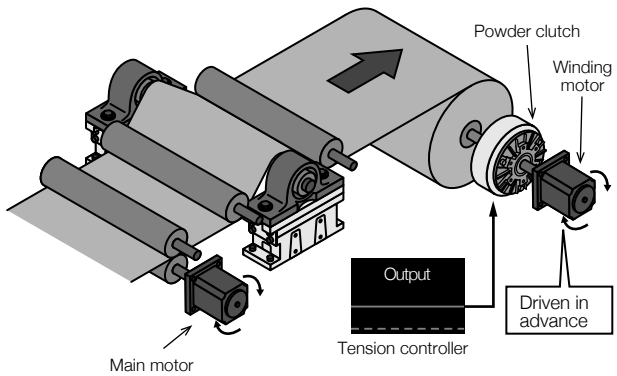

Q10: Why does the tension increase as the reel diameter becomes smaller on the unwinding side in closed-loop tension control?

A10: The mechanical loss may have some effect.
The mechanical loss is regarded as the cause when the voltage applied to the powder brake is "0".
As a countermeasure, it is necessary to reduce the mechanical loss. Major causes of mechanical loss are the sliding resistance of the bearing which supports the reel shaft and the gear installed between the reel shaft and the brake. The mechanical loss tends to increase with higher gear ratio.

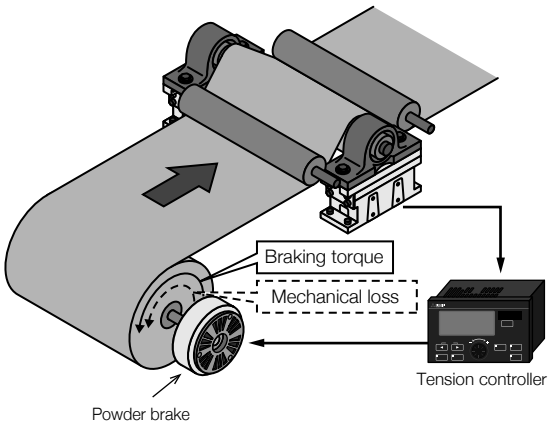

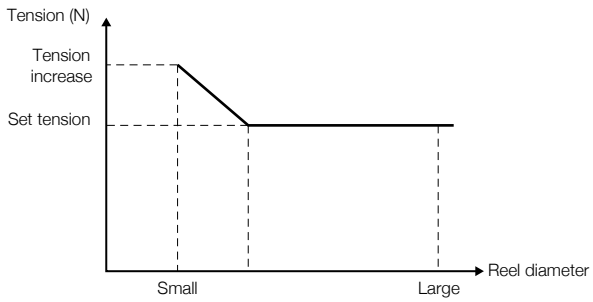

Q11: Why does the tension easily decrease when the reel diameter is small in open-loop control?

A11: The powder characteristics (nonlinear in the low torque region) may have some effect.
As a countermeasure, use the powder nonlinearity correction function which improves the torque characteristics in the low current region.

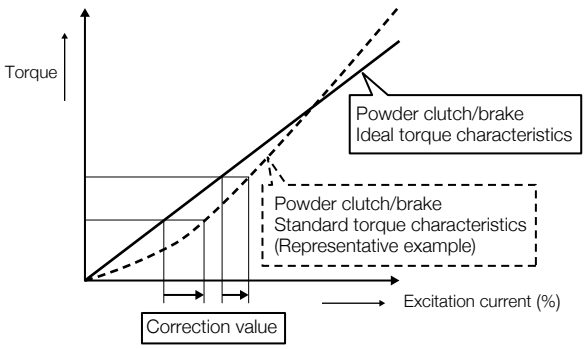

Glossary

A	
AC servo	A servo that uses a synchronous motor is called an AC servo in Mitsubishi Electric Corporation.
Acceleration tension	Tension generated by the inertia of winding materials or rolls at the start of machine. Tension increases on the unwinding side and decreases on the winding side.
Accumulator	A mechanism that accumulates long materials without stopping the line during unwinding/winding roll exchange on a continuously operating line.
Actuator	A driving or controlling mechanism such as a clutch, brake, or motor installed on the unwinding or winding reel shaft.
Air clutch Air brake	A clutch/brake which transmits the torque by pressing friction plates together with air pressure.
Amplifier	A device that inputs voltage, current, power, etc. and generates an output signal with a value larger than the input value. [Related terms] Servo amplifier, power amplifier, booster amplifier
Analog	A continuous quantity such as voltage, current, tension etc. The method of displaying tension with a pointer type meter is called an analog display method. [Related terms] Digital
Auto gain	In the automatic control system, auto Gain is a function to automatically determine the control constant (integral time, proportional gain, etc.) by measuring the step response characteristic.
Auto paster	A mechanism that automatically exchanges the new and old rolls and pastes the new roll without stopping the line during unwinding/winding roll exchange on a continuously operating line. It is also referred to as automatic paper splicing or automatic pasting.
Auto span	A function to automatically calibrate the actual tension and display tension during span adjustment of a tension meter or tension controller. [Related terms] Span adjustment
Auto zero	A function to automatically perform zero adjustment during zero adjustment of a tension meter or tension controller. [Related terms] Zero adjustment
Automatic paper splicing	[Related terms] Auto paster
Automatic pasting	[Related terms] Auto paster
Automatic reel diameter detection method	[Related terms] Ratio calculation type reel diameter detection
B	
Bamboo shoot roll	The state in which the end face of the winding material is irregular with the reel core protruding. Taper tension control is performed to prevent this problem.
Bellofram type air cylinder	A bellows type air cylinder used, in a system that applies a load to a dancer roll using an air cylinder, in order to improve responsiveness and reduce frictional resistance.
Booster amplifier	An amplifier used in tension control to receive a signal of 0 to 5 V from the tension controller and supply an output current of 4 to 20 mA to the electro-pneumatic converter.
Braking torque	Torque of the brake that is applied to the unwinding reel. Dividing this value by the unwinding radius gives the unwinding tension.

Broken line taper	Taper tension control which changes the taper ratio in the intermediate reel diameter without using the same taper ratio from the initial diameter to the final diameter. [Related terms] Taper tension
C	
Closed-loop control	To automatically control the output according to the difference between the target value and detected value. This corresponds to a tension controller that uses a tension detector in combination.
Constant current control unit	Regardless of fluctuations in power supply voltage or load resistance, this control unit produces variable constant output current.
Constant tension control	Regardless of changes in reel diameter, unwinding/winding is controlled with a constant tension.
Constant torque control	Regardless of changes in reel diameter, unwinding/winding is controlled with a constant torque. A type of taper tension control.
Constant voltage control unit	Regardless of fluctuations in power supply voltage or load resistance, this control unit produces variable constant output voltage.
Control components	Components such as a transformer, diode stack, sliding voltage regulator, adjustment resistor, protective resistor etc., which constitute a DC power supply for clutches and brakes.
Controller	A control unit. Refers to a power amplifier, tension controller, or the like with respect to tension control.
Converting	To apply various processing and treatment to long materials. The machines used for this purpose are called converting machines.
Corner diameter	Reel diameter which becomes a corner point where the taper rate changes in the broken line taper. [Related terms] Broken line taper
D	
Dancer roll	A driven roll with a support shaft which can move up and down or right and left. In terms of the dancer roll, the tension of material is determined by the load applied to the roll support shaft.
Dead band	In closed loop control that performs output control according to the deviation between the target value and detection value, correction control is not performed when the deviation is small in order to achieve stabilization. Dead band is a deviation band for achieving stabilization. [Related terms] Closed-loop control
Deceleration gain	Control magnification for reducing tension fluctuation caused by reel inertia during deceleration of the machine. Example: In the case of the LE-40MTA-E type fully automatic tension controller, an output of 0 to 400% of the current output (below the rated output) can be generated.
Deceleration tension	Tension generated by inertia of reels at deceleration of the machine. Tension decreases on the unwinding side and increases on the winding side.
Differential transformer	Used to measure the displacement of the spring dancer roll to detect the tension, or to measure the movement of the touch lever to detect the reel diameter. A movable iron core is provided between the primary and secondary coils so that a secondary coil voltage corresponding to the iron core position can be obtained. [Related terms] Spring dancer roll, touch lever
Digital	A method of handling values based on discrete quantities. [Related terms] Analog

Draw control	To operate at a constant elongation rate (drawing rate) by providing multiple feed rolls and slightly increasing the peripheral speed of the rear stage.
Drive member	Input-side rotating body of a clutch or brake.
Driven member	Output-side rotating body of the clutch.
Driven roll	A roll which is not driven by the motor. [Related terms] Guide roll
E	
Electronic gear	To compensate for the error between the gear ratio required in the system and the actual gear ratio of the machine by electronic circuit or arithmetic processing.
Electro-pneumatic converter	Used to obtain air pressure proportional to the input electrical signal and to control air clutches and air brakes. Power supply unit: DC power supply with a built-in manual regulator used to excite clutches and brakes.
External taper tension control	To control taper tension by using a reel diameter detection device. [Related terms] Taper tension, internal taper tension control
External tension meter	Displays the tension signal received from the tension meter. Tension meters showing various full-scale tension scales are available.
F	
Feed roll	A driving roll to run long materials. The feed roll must have a structure which does not cause slippage between the roll and material. Also referred to as a nip roll or pinch roll.
Feedback	In the case of tension detection, the detected value of tension is loaded into the control system in closed loop control. [Related terms] Closed-loop control
Fine displacement tension detector	Detects tension by measuring fine displacements (0 to ±200 μm) of leaf springs based on tension load with a high precision differential transformer.
G	
Geared motor	A motor integrated with a speed reducer. A servo motor with a speed reducer with a large deceleration ratio is not very suitable for torque control.
Guide roll	A roll used for preventing horizontal deflection and a change in direction during material traveling. It is also referred to as a driven roll because it is not driven by a motor but is rotated by the traveling of material. [Related terms] Driven roll
H	
Heat dissipation	Heat generation per unit time caused by slipping. The heat dissipation P (W) of the clutch/brake is proportional to the product of the slip rotation speed Nr (r/min) and transmission torque T (Nm). $P = 0.105\ NrT\ (W)$
Hunting	Hunting phenomenon in feedback control.
I	
Inertia compensation control	Due to the inertia of the reel, the tension increases on the unwinding side and decreases on the winding side when the machine starts. Conversely, when the machine decelerates, the tension decreases on the unwinding side and increases on the winding side. In order to suppress such tension fluctuation, this control is performed to increase or decrease the braking torque and winding torque at the time of starting or stopping.

In-feed	Between unwinding reel and feed roll. [Related terms] Feed-roll
In-feed roll	Roll provided in in-feed. The in-feed roll is driven by a clutch, brake, servo motor, etc. As a result, the tension of the long material upstream of the processing machine can be controlled with high accuracy. [Related terms] In-feed
Integral time	Even when the tension deviation is small, if it continues, the control output is changed to further lessen the tension deviation. The term refers to the integral time constant at this time.
Integrated thickness detection method	Determines the reel diameter by the product of the set value of material thickness and the amount of reel rotation.
Internal taper tension control	To control taper tension without using a reel diameter detection device. [Related terms] Taper tension, external taper tension control
Inverter	A device that implements variable-speed driving of a general-purpose induction motor by coaanverting commercial AC voltage to DC voltage and to variable frequency AC voltage.
L	
Length measurement function	Detection function of material travel length. The function can obtain advance notice signals and final signals of empty reels (unwinding) and full reels (winding).
Level meter	Displays tension values in the form of a bar graph with LEDs arranged in a straight line.
Lifting roll	A driven roll in the accumulator. The support shafts of a number of lifting rolls are moved up and down to accumulate or take out the materials. [Related terms] Accumulator, driven roll
Linear line taper	To control the taper tension with a constant tension taper ratio from the initial diameter to the final diameter. (The taper ratio should be controlled constantly during control.) [Related terms] Taper tension
M	
Mechanical loss correction	To prevent any rolling resistance in the reel from affecting the control tension.
Multi-shaft distribution control	In the simultaneous multi-shaft winding/unwinding mechanism, control output of each shaft should be distributed based on the signal of a single control unit.
N	
New shaft preset	In automatic paper splicing control, set the initial value of the torque required for the new shaft immediately after switching. [Related terms] Auto paster
Nip roll	[Related terms] Feed-roll
Nonlinear correction	To make correction between the input signal and output current to compensate for current vs. torque nonlinearity in the powder clutch/brake.
Numeric keypad	A keypad having 10 numeric keys from 0 to 9. It is used for various numerical settings in digital control units.
O	
Old shaft sudden stop	The automatic paper splicing/unwinding mechanism suddenly stops the reel on the side where unwinding has been completed. For this purpose, some control units have a fixed power supply of short duration rating.

Open-loop control	Control to keep the tension constant by controlling the reel torque by reel diameter detection. [Related terms] Closed-loop control
Out-feed	Between the winding reel and the feed roll.
Out-feed roll	Roll provided in out-feed. The out-feed roll is driven by a clutch, brake, servo motor, etc. As a result, the tension of the long material after processing can be controlled with high accuracy. [Related terms] Out-feed
P	
Phase control	One of the AC voltage control methods, which extracts a part of the AC waveform and controls the average voltage of the output while changing the current running time.
Pillow block	Support of the bearing supporting tension detection roller. The height from the mounting surface to the support center is called the center height.
Pinch roll	[Related terms] Feed-roll
Positive unwinding	To drive the unwinding reel for initial paper feeding operation, or to accelerate the preparation reel (new shaft) during automatic paper splicing operation and drive the unwinding reel with a motor at the time of circumferential speed adjustment, etc.
Potentiometer	Detects the rotation angle by applying a constant voltage between the fixed terminals of the variable resistor and measuring the potential of the sliding terminal.
Powder clutch Powder brake	An electromagnetic type clutch/brake which transmits torque by filling fine iron powder between the input rotating body and the output rotating body (or stationary body) and giving magnetism to it.
Power amplifier	Generates 0 to rated output voltage and current for the powder clutch/brake in proportion to input signal voltage 0 to 5 V.
Predrive	Preparatory operation performed in the automatic paper splicing device in order to adjust the peripheral speed of the preparatory reel to the line speed.
Press roll	A roll used in a circumferential driving/braking type winding/unwinding device in order to keep the reel pressed against the under-roll.
Proportional gain	The ratio of the direct response component of the control output with respect to the control deviation.
Proximity switch	A non-contact type switch that operates when the detector approaches. It may be used as a rotation signal of a reel or feed roll. [Related terms] Feed-roll
Pulse generator	The device that generates pulses to detect the rotation speed of the feed roll in a ratio calculation type reel diameter detection device. Also referred to as a rotary encoder.
R	
Ratio calculatioan type reel diameter detection	A method of detecting the reel diameter by dividing the rotation speed of the feed roll by the rotation speed of the reel frame.
Reel shaft electronic gear	Electronic gear correction with respect to reel shaft rotation detection pulse signal (reel shaft pulse). [Related terms] Electronic gear
Rotary encoder	[Related terms] Pulse generator
Rotary joint	A rotation mechanism for sending cooling water to the water-cooled powder clutch/brake provided on the turning arm for automatic paper splicing.

S	
Safety barrier	Connected between explosion-proof equipment and non-explosion-proof equipment to prevent an abnormal voltage generated in non-explosion-proof equipment installed in a general environment from entering a hazardous environment.
Semi-automatic reel diameter detection	[Related terms] Integrated thickness detection method
Sensitivity	Proportional constant of deviation input to the integrating circuit. Hunting tends to occur when sensitivity is high, and the steady-state deviation increases when sensitivity is low. [Related terms] Hunting
Sensor	Refers to a tension detector, proximity switch, pulse generator, and so on in tension control.
Servo amplifier	The controller controls the servomotor through a servo amplifier. In tension control, a servo amplifier is connected between the tension controller and servomotor. In response to input signals of 0 to 5 V, the servomotor generates 0 to rated torque. [Related terms] Controller, servomotor
Servo motor	A motor that can be freely drive-controlled based on the difference between the command signal and the feedback signal from the detector. It can perform position control, speed control, torque control, etc.
Sliding tension	To prevent a sudden change of tension by gradually decreasing the actual command value even if the set value suddenly decreases. Such a gradual decline gradient can be adjusted.
Slip ring	A conductive ring with a brush that contacts the rotating body for energizing. A slip ring is required when a powder clutch or powder brake is installed on the turning arm for automatic paper splicing.
Slip rotation speed	Difference between the input rotation speed and the output rotation speed of the clutch. It is also the input rotation speed itself in terms of a brake.
Span adjustment	To adjust the proportional constant so that the rated output signal and the full-scale display output signal of the meter can be obtained when the maximum input signal is given.
Spring dancer roll	To give tension to the material by expansion and contraction of the spring provided on the dancer roll. [Related terms] Dancer roll
Stall torque	A certain amount of torque which continues to be applied during startup of the machine or after completion of stop. No feedback control is performed during this time. [Related terms] Feedback
Start timer	A timer used in tension control to set the time to switch to the automatic tension control mode after starting the machine. During this period, operation is performed with a predetermined torque (stall torque).
Stop bias	In unwinding tension control, to apply a predetermined braking torque temporarily in order to prevent sag due to inertia during stop.
Stop gain	Magnification of control output generated during operation of the stop timer after the machine stop operation is started.
Stop roll	A roll which is provided at the entrance of the unwinding-side accumulator or the entrance of the winding-side accumulator to hold the material while exchanging reels.
Stop timer	A timer used for tension control to set the time during which inertia compensation control (stop gain, stop bias correction) is performed at the time of stop.

T	
Taper tension	In the winding operation, tension is gradually reduced as the winding thickness.
Taper tension ratio	Tapering ratio of tension. (Minimum diameter tension - maximum diameter tension)/minimum diameter tension
Tension control by torque control	Tension control based on torque control, which controls the tension of the material by adjusting the rotation torque of the roll.
Tension meter	Amplifies the weak signal (0 to ±150 mV) from the tension detector to obtain a tension signal output of 0 to 5 V and display its value on the meter.
Torque motor	A specially designed AC squirrel cage motor, equipped with a cooling fan so that it can operate at an arbitrary rotational speed. The output torque can be changed by the applied voltage, but is decreased as the rotation speed increases.
Touch lever	The moving angle of the roll in contact with the reel is detected by the motion of the lever to obtain a signal in proportion to the reel diameter. The movement of the lever is detected with the differential transformer, potentiometer or the like.
Transistor chopper	Controls the average voltage applied to the load by controlling the ON/OFF ratio of the transistor connected in series with the load. The transistor chopper reduces the heat generation of the adjustment part compared to adjusting with a variable resistor or the like.
Transmission torque	The torque transmitted from the input shaft of the clutch to the output shaft. It becomes equal to the control torque of the clutch when the clutch is slipping.
Turning arm	A reel support for changing the positions of multiple unwinding or winding reels and carrying out the operation for switching to a new shaft. It is also called a turret arm.
Turret arm	[Related terms] Turning arm
U	
Under-roll	A roll installed in the lower part of the reel, not to drive/brake the winding shaft/ unwinding shaft, but to drive/brake the rolls that come in contact with the periphery of the reel.
W	
Weight dancer	Adds a load to the dancer roll to apply tension to the material. [Related terms] Dancer roll
Z	
Zero adjustment	Operation to adjust the position, where the tension detection roller's own weight is applied, to the 0 (zero) point.
Zero tension detection	To detect the condition under which the tension becomes lower than the setting.
Other	
% output meter	When the output current to the powder clutch/brake is displayed, the rated current (or rated torque, rated voltage) of the load is regarded as 100%, which is made to correspond to the full scale of the 1 mA DC meter.

MEMO

ELECTROMAGNETIC CLUTCHES AND BRAKES

TENSION CONTROLLER

MITSUBISHI ELECTRIC CORPORATION
HEAD OFFICE: TOKYO BLDG., 2-7-3, MARUNOUCHI, CHIYODA-KU, TOKYO 100-8310, JAPAN
http://Global.MitsubishiElectric.com

SH(NA)170011ENG-C 1908(MEE)

Printed August 2019