MITSUBISHI ELECTRIC
Changes for the Better

FACTORY AUTOMATION

MELSEC-F series
FX Replacement Guide

MELSEC-F

MELSEC-F series

Replacement Proposal

40 years of service backed by our customer's trust.

Mitsubishi Electric's MELSEC-F series of micro programmable controllers was first introduced in 1981. For over 40 years since then, Mitsubishi Electric has gained the trust and confidence of customers around the world for its cutting-edge unit-type programmable controllers with an impressive 15 million-plus units sold (cumulative sales volume) in 2017.
The MELSEC-F series has continually evolved to meet the needs of the times and is now in its third generation (F series: 1st generation, FX series: 2nd generation, FX3 series: 3rd generation). Several older discontinued products have also already reached the end of their repair period (7 years after discontinuation).
This guide is designed for anyone considering replacing their programmable controllers from devices for which repairs are no longer offered.

1st Generation

F, F_1, F_{1J}, F_2	FX_0, FX_{0N}, FX_{0S}, FX_1, FX_2/FX, FX_{2C}
1981 – 2000	1989 – 2002

Repair periods

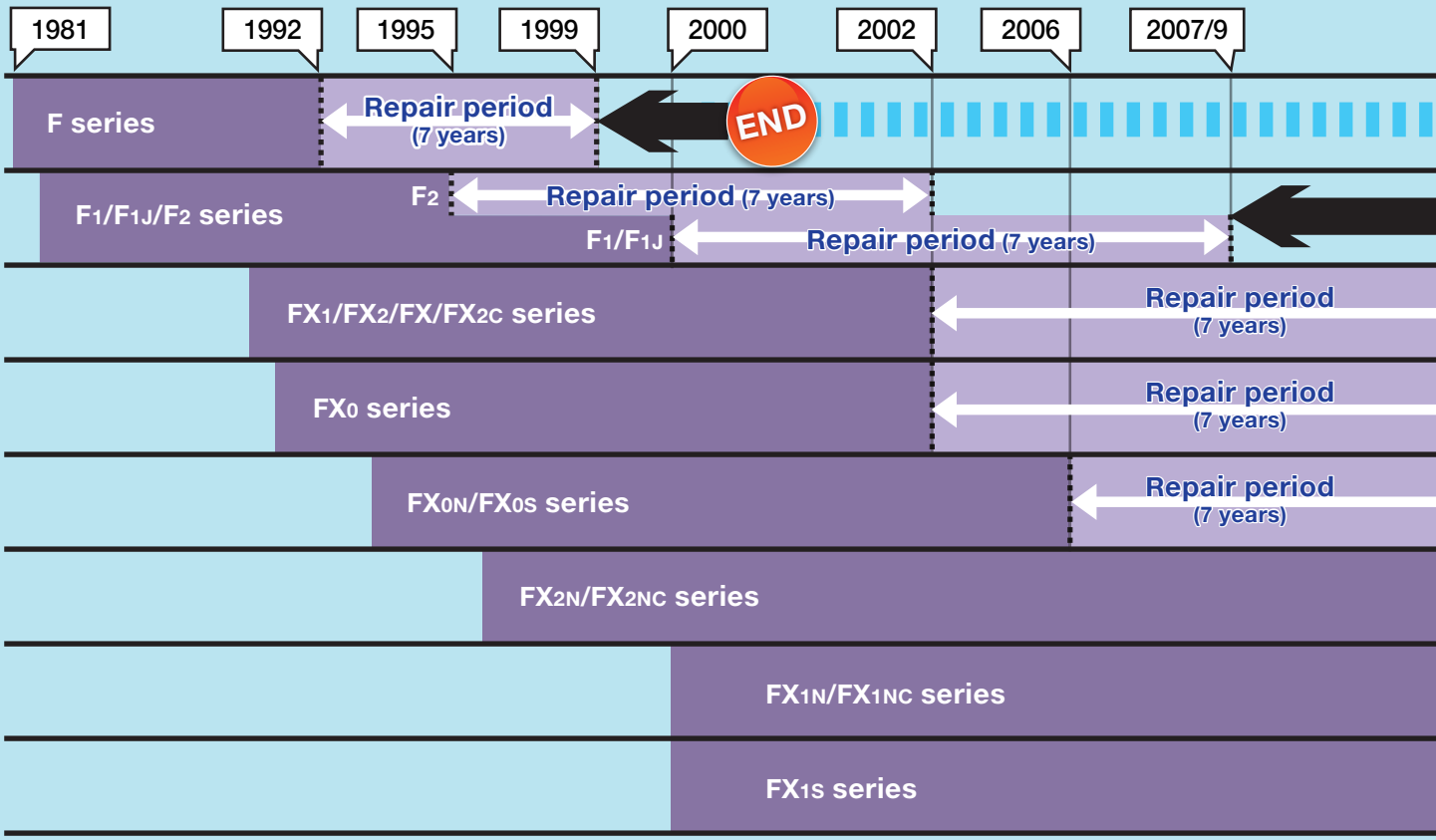

Over 15 million units sold worldwide

(As of 2017)

2nd Generation	3rd Generation
FX1S, FX1N, FX1NC, FX2N, FX2NC	FX3S, FX3G, FX3GC, FX3U, FX3UC
1996 – 2015	2003 – Today

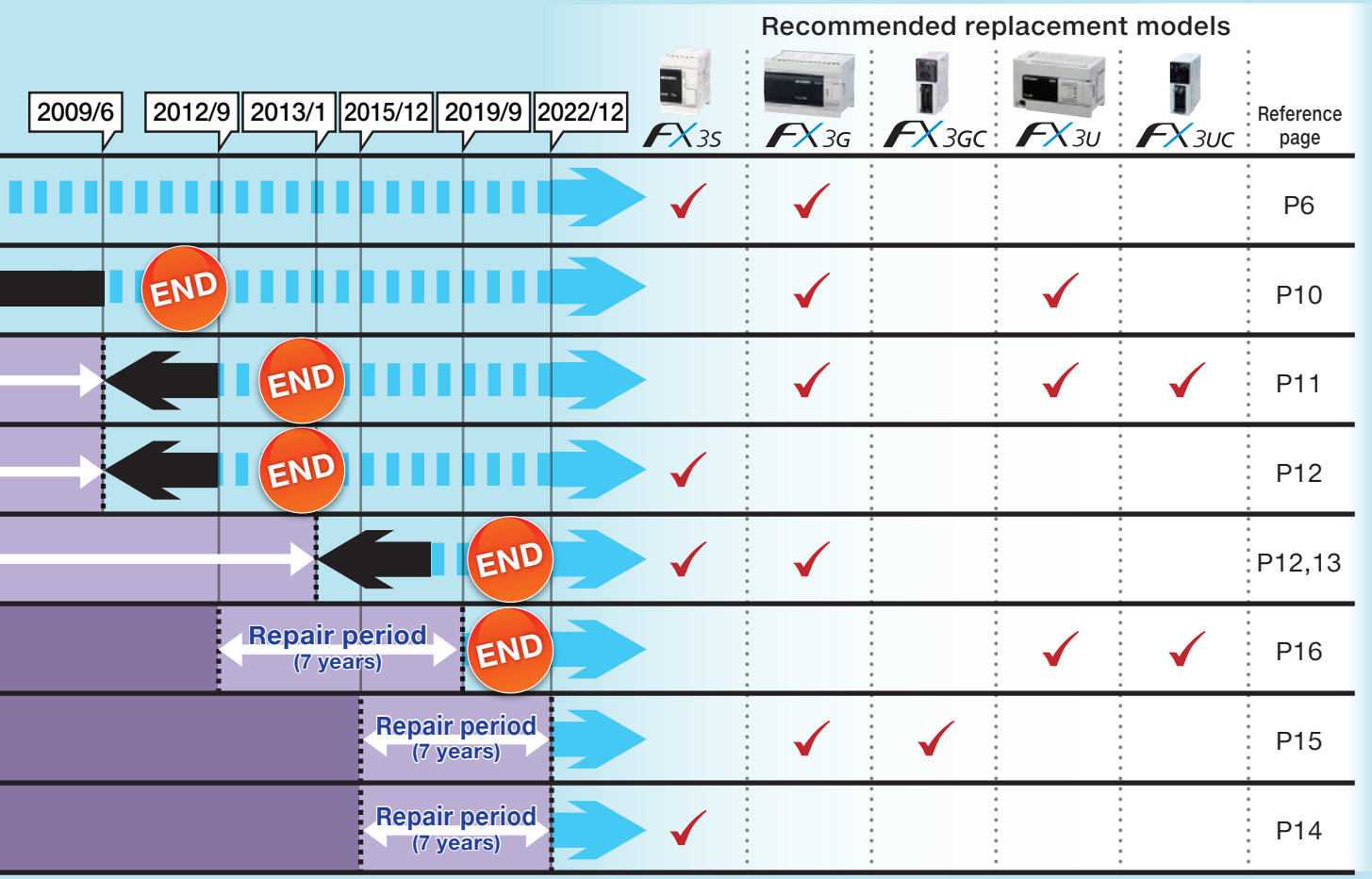

Necessity and Benefits of Replacement

Not all products and parts last forever, and it is essential to perform preventative maintenance before components fail. This means that regular site inspections are important.

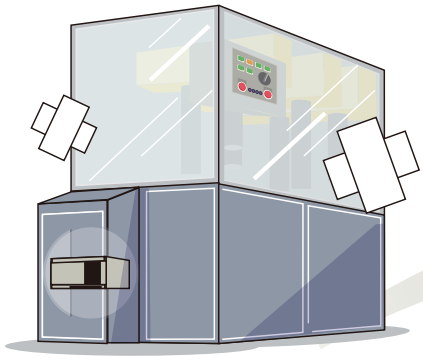

Necessity for replacement

Parts life limits

Despite Mitsubishi Electric's efforts to create products with fewer failures, parts with a limited life span (such as electrolytic capacitors, relays, switches, and batteries) inevitably wear out. After a certain number of years (usability lifespan), such parts can affect the characteristics of the PLC, leading to malfunctions and failures. Electronic parts are also generally affected by their operating environment, and using such products in high ambient temperatures, under excessive loads, or when incorrectly installed can lead to more rapid deterioration.

In this way, parts wear over time and the operating environment can both affect the product's service life, highlighting the need for periodic replacement.

Maintenance before failure

Parts inevitably wear out over time and due to operating environment, which can then lead to failures. If a product that is no longer in production fails, recovery can be slow, and secondary losses will also increase.

This makes understanding the equipment and reading out programs essential, as well as preparing for contingencies by gathering spare parts and standardizing replacement procedures. Regular maintenance and replacement plans should be put in place and strictly enforced.

Planning replacement

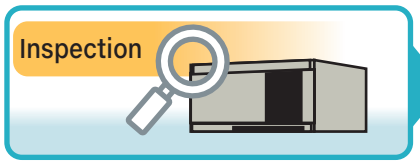

Make a list of the number and types of PLC being used. Also, look at the associated programs, wiring diagrams, and other details.

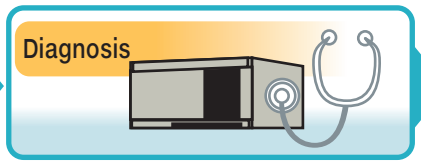

Prioritize equipment based on importance, period of use, and operating environment, and consider replacement procedures.

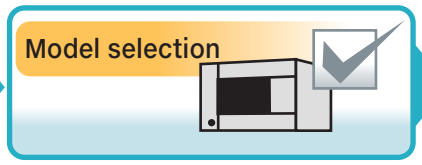

Select an appropriate replacement model based on the number of inputs and outputs, and whether any special expansions must be considered. Select a model from the FX3 series.

Increase productivity
by using the latest devices

Replacement

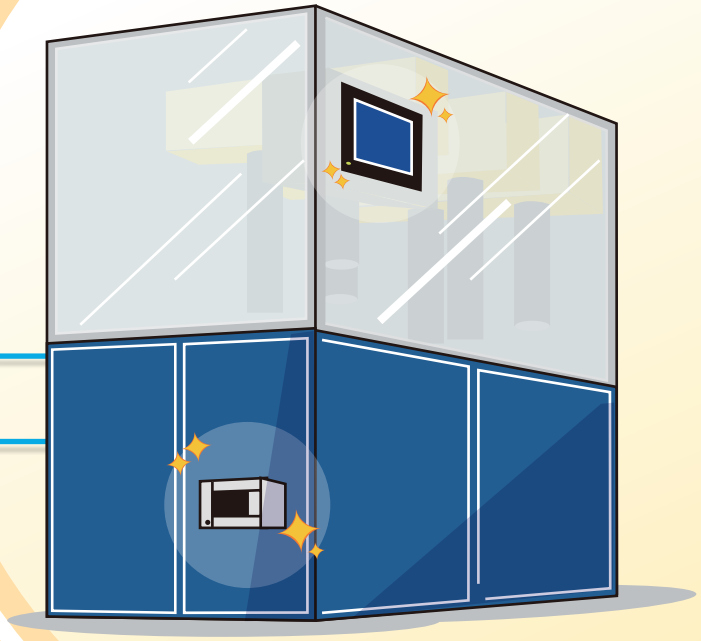

Benefits of replacement

- Improved production efficiency with various new functions and processing capabilities
- Wide-range of built-in functions for improved space savings
- Programless expansion using adapters
- Easily connectable GOT with intuitive operation
- Direct connectivity to inverters for detailed control and improved energy savings
- 3-axis pulse output of up to 100 kHz for flexible motor control
- CC-Link, Ethernet, and other network connectivity to host devices
- Simplified programming using GX Works2 and other software
- MODBUS/RTU connectivity for various devices
- Ethernet-based remote maintenance and status checking

Simple
and intuitive operation

Program conversion

Convert and modify programs that have been read out for use in the new PLC.

Replacement

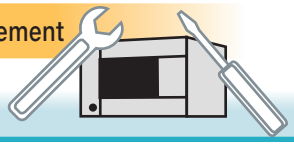

Plan for selected equipment to be replaced on-site.

Debugging

Perform post-replacement testing, debugging, and timing adjustment.

How to replace each model

New models will have different device configurations than older models.
The following overview explains how to replace each model.

Currently used model	Repair period END F1 F1J F2	Repair period END FX1 FX2/FX FX2C
Program read	FX-20P(-E) + FX-20P(-E)-FKIT	
Models after replacement	FX3G FX3U How to replace: P10	FX3G FX3U FX3UC How to replace: P11

Repair period END F ▶ Reading out is not possible with current equipment. (Legacy equipment required.) ▶ Consult your nearest dealer about replacement.

Repair period
END

FX0 FX0S FX0N

Repair period
Until
December 31, 2022

FX1S FX1N FX1NC

Repair period
END

FX2N FX2NC

Engineering software
GX Works2

or

FX-30P

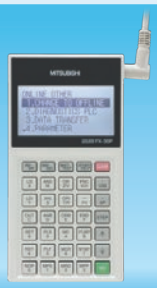

FX3S FX3G

How to replace: P12, 13

FX3S FX3G FX3GC

How to replace: P14, 15

FX3U FX3UC

How to replace: P16

Easy program conversion using personal computer software

The FX series is compatible with GX Works2 for easy program conversions and simplified use of the latest FX3 series functions.

GX Works2 for intuitive programming on the FX series

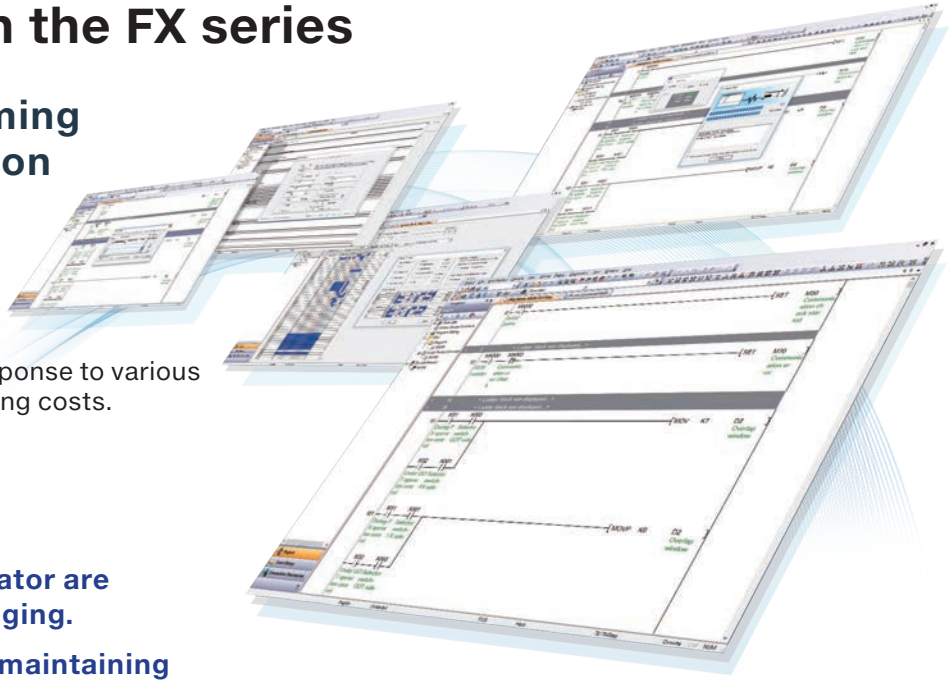

Simplified programming and intuitive operation

To improve design efficiency.
To reduce debugging time.
To minimize downtime.
To protect valuable data.

GX Works2 is the solution in response to various requests for reducing engineering costs.

- **GX Developer and GX Simulator are integrated for easier debugging.**
- **Improved operability while maintaining the assets and usability of GX Developer.**

PLC compatible with the MELSEC-F series

FX0, FX0N, FX0S, FX1, FX2/FX, FX2C, FX1S, FX1N, FX1NC, FX2N, FX2NC, FX3S, FX3G, FX3GC, FX3U, FX3UC

Converter for personal computer connection/interface unit

- **FX-232AWC-H type interface unit**
  This RS-422/RS-232C conversion interface unit is used to connect an FX series PLC to a general-purpose personal computer.

- **FX-USB-AW type RS-422/USB converter**
  This RS-422/USB converter is used to connect an FX0, FX0N, FX0S, FX1N, FX1NC, FX1S, FX2N, FX2NC, FX3U, or FX3UC PLC to a general-purpose personal computer with a USB port.

Connecting to a personal computer (GX Works2, GX Developer Ver. 8)

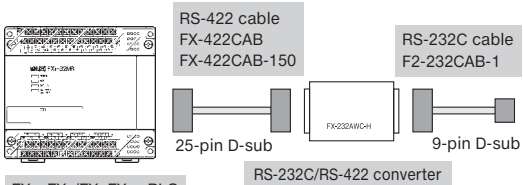

FX1, FX2/FX, FX2C PLC
(FX2 PLC shown in figure)

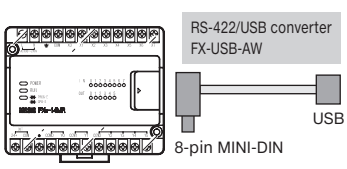

FX0, FX0N, FX0S, FX1N, FX1NC, FX1S, FX2N, FX2NC, FX3U, FX3UC PLC
(FX0 PLC shown in figure)

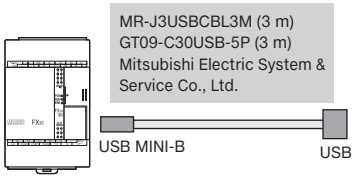

FX3S, FX3G, FX3GC PLC
(FX3S PLC shown in figure)

Increase efficiency with a handy programming panel!

The pocket-sized design enables efficient on-site reading.
The FX-20P(-E) + FX-20P(-E)-FKIT*1 can be used for reading and changing to PLC types with the F1, F1J, and F2 series, while the FX-30P*2 can be used for reading and changing with the FX series.

*1: Refer to the FX-20P(-E)-FKIT operation manual (JY992D19301) for information on changing the PLC type.
*2: Refer to the FX-30P operation manual (JY997D34401) for information on changing the PLC type.

Connecting to a handy programming panel

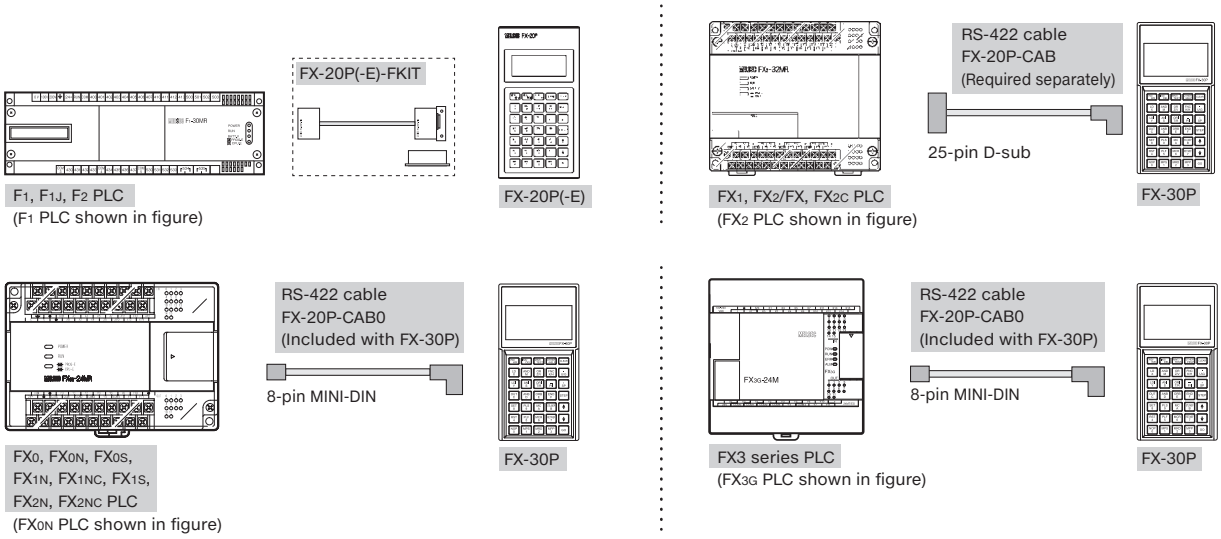

FX-30P handy programming panel

Easy to see large screen and FX3 series-compatible

- Easy to see and use with an 8-line × 21-character display
- Stores up to 15 programs (or up to 7 programs over 32 k steps)
- Compatible with all FX series (FX-20P-CAB required separately for FX1, FX2/FX, FX2C)
- English, Japanese, and Chinese (Simplified, Traditional) menu languages available
- Buffer memory monitoring for special blocks
- Upgradeable to the latest system software from Mitsubishi Electric FA Global site

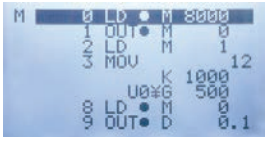

List monitoring screen

Buffer memory monitoring screen

FX-30P handy programming panel

*: The FX-30P has functions equivalent to or better than the FX-20P(-E). However, the FX-20P(-E)-FKIT is only compatible with the FX-20P(-E).

How to replace each model

Updating an F1, F1J, or F2 PLC

Follow the procedure below to read out the data from an F1, F1J, or F2 PLC and to convert the current FX PLC program.

1. Connect the FX-20P(-E) handy programming panel together with the FX-20P(-E)-FKIT.
2. After performing program reading and conversion, connect the new FX PLC and write the program to the controller.
3. Modify the programs using GX Works2 or other programming software.

Hardware design changes are needed for the mounting method and wiring because the exterior and terminal layout are different.

Connecting to an F1/F1J/F2 PLC

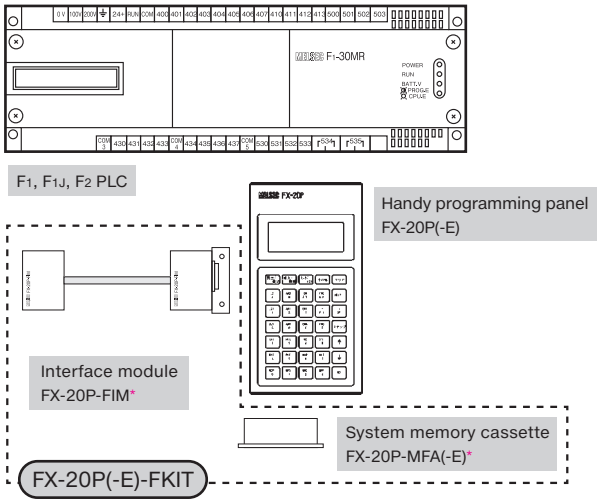

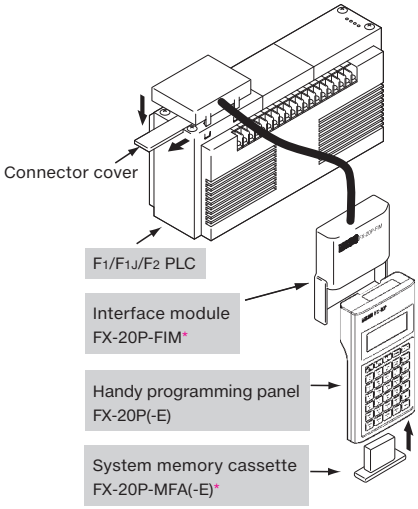

*: The FX-20P-FIM and FX-20P-MFA(-E) are included in the FX-20P(-E)-FKIT.

Differences between F1/F1J/F2 and FX3G/FX3U

Devices	Inputs/outputs, auxiliary relays, timers, counters, states, special devices
Basic instructions	Output instructions, master control instructions, shift instructions, jump instructions
Application instructions	All (Due to different instruction numbers and concepts, customers are responsible for conversions.)
Expansion devices	Extension units, memory cassettes
Exterior	External dimensions (see figure below), terminal layouts/names, communication port connector shape

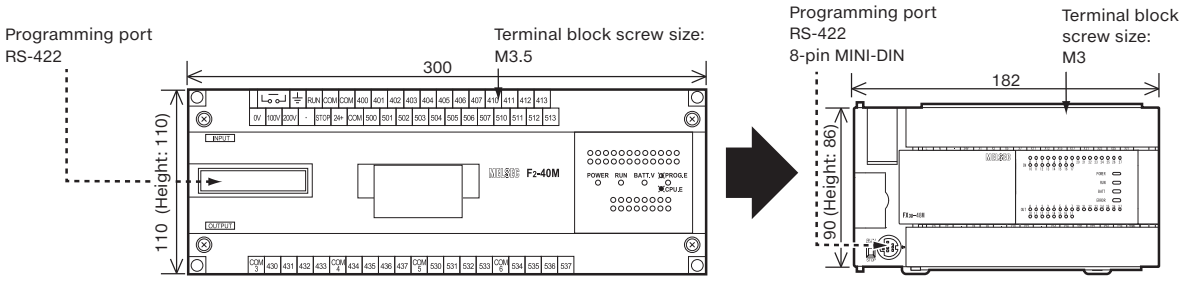

F1, F1J, F2 PLC
(F2-40M shown in figure)

FX3G, FX3U PLC
(FX3U-48M PLC shown in figure)

Unit: mm

Program modification required.

Available on the Mitsubishi Electric FA Global site.

When replacing the F1, F1J, F2 with the FX3G, FX3U as described above, the program must be modified because the inputs/outputs and internal device assignments are different and application instructions will not be converted.

Be sure to refer to the **F(F1, F1J, F2)→FX3 series Replacement Guidance (SH-082484ENG)**.

Updating an FX1, FX2/FX, or FX2C PLC

Follow the procedure below to read out the data from an FX1, FX2/FX, or FX2C PLC and to convert the current FX PLC program.

1. Connect the FX1/FX2/FX/FX2C PLC to the personal computer using the RS-232C/RS-422 converter and cables.
2. Read the program with GX Works2 programming software or other software to change the PLC type.
3. Modify the program, connect the new FX PLC, and write the program to the controller.

Hardware design changes are needed for the mounting method and wiring because the exterior and terminal layout are different.

Connecting to an FX1/FX2/FX/FX2C PLC

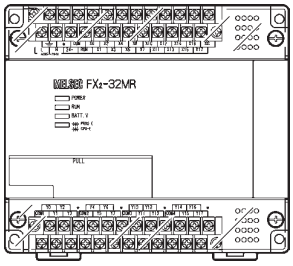

FX1, FX2/FX, FX2C PLC
(FX2 PLC shown in figure)

RS-422 cable
FX-422CAB
FX-422CAB-150

25-pin D-sub

RS-232C/RS-422 converter
FX-232AWC-H

RS-232C cable
F2-232CAB-1

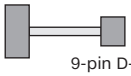

9-pin D-sub

PC*
- Programming software
  - GX Works2
    International version: SW1DNC-GXW2-E
    Japanese version: SW1DNC-GXW2-J
  - GX Developer: SW□D5C-GPPW-E

*: Refer to the programming software manual being used for the specified personal computer operating environment.

Differences between FX1/FX2/FX/FX2C and FX3G/FX3U/FX3UC

Devices	Auxiliary relays, timers, counters, states, data registers, pointers
Functions	Input filter adjustment, pulse output, high-speed counter, calculation speed, clock
Application instructions	Instructions for F2-32RM, binary floating point, MTR instructions
Expansion devices	Extension units, extension blocks, special function blocks, special adapters, memory cassettes
Exterior	External dimensions (see figure below), terminal layouts/names, communication port connector shape

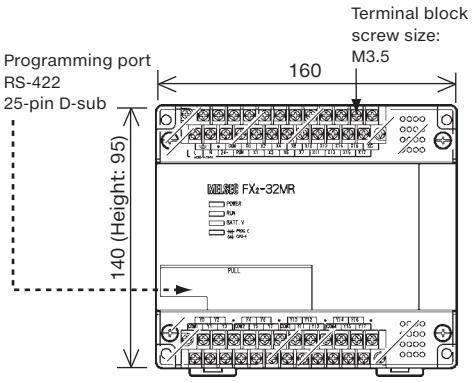

FX1, FX2/FX, FX2C PLC
(FX2-32 PLC shown in figure)

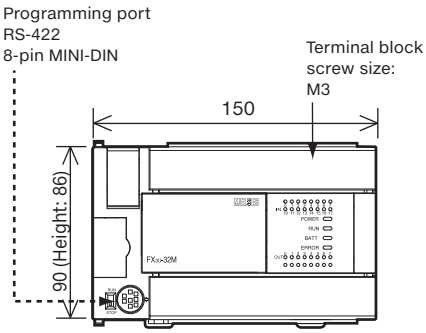

FX3G, FX3U, FX3UC PLC
(FX3U-32M PLC shown in figure)

Unit: mm

Program modification required.

Available on the Mitsubishi Electric FA Global site.

When replacing the FX1/FX2/FX/FX2C with the FX3G/FX3U/FX3UC, the program must be modified because internal device assignments and the programming method for additional equipment are different.

Be sure to refer to **TECHNICAL BULLETIN FAM-A-0025(FX1)/FAM-A-0039(FX2/FX)/FAM-A-0027(FX2C)**.

How to replace each model

Updating an FX0 or FX0S PLC

Follow the procedure below to read out the data from an FX0 or FX0S PLC and to convert the current FX PLC program.

1. Connect the FX0, FX0S PLC to the personal computer using the RS-422/USB or RS-232C/RS-422 converter and cables.
2. Read the program with GX Works2 programming software to change the PLC type.
3. Modify the program, connect the new FX PLC, and write the program to the controller.

Although the number of inputs/outputs is the same, the external size is smaller, so only minimal hardware design changes are needed for the mounting method and wiring.

Connecting to an FX0/FX0S PLC

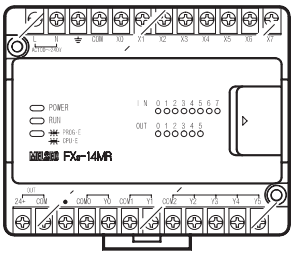

FX0, FX0S PLC
(FX0 PLC shown in figure.)

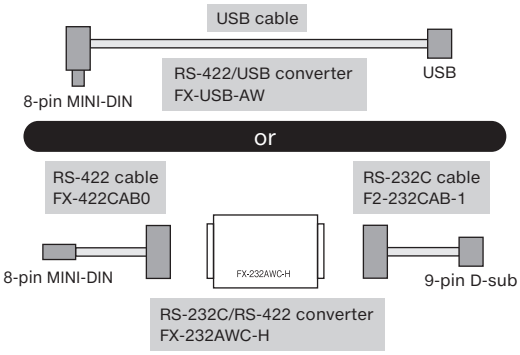

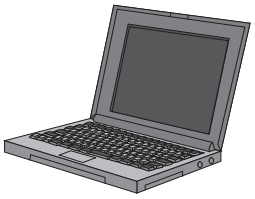

PC*
- Programming software
  - GX Works2
    International version: SW1DNC-GXW2-E
    Japanese version: SW1DNC-GXW2-J

*: Refer to the programming software manual being used for the specified personal computer operating environment.

Differences between FX0/FX0S and FX3S

Devices	Auxiliary relays, timers, counters, states, data registers, pointers
Functions	Input filter adjustment, pulse output, high-speed counter, calculation speed
Expansion devices	Not available with FX0/FX0S
Exterior	External dimensions (see figure below), terminal layouts/names

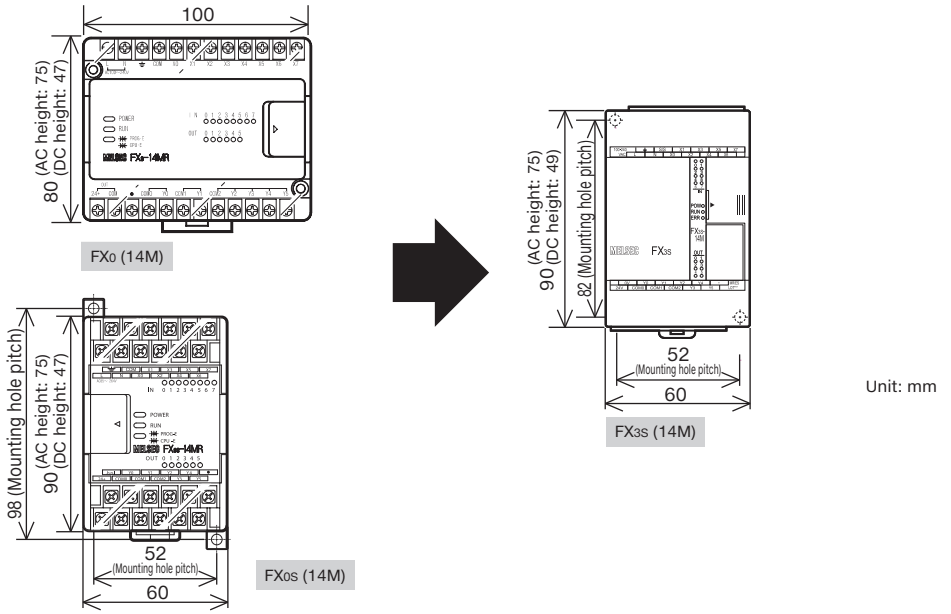

Unit: mm

Program modification required.

Available on the Mitsubishi Electric FA Global site.

When replacing the FX0/FX0S with the FX3S, the program must be modified because internal device assignments and functions are different.
Be sure to refer to **TECHNICAL BULLETIN FAM-A-0031 (FX0, FX0S)**.

Repair period END

Updating an FX0N PLC

Follow the procedure below to read out the data from an FX0N PLC and to convert the current FX PLC program.

1. Connect the FX0N PLC to the personal computer using the RS-422/USB or RS-232C/RS-422 converter and cables.
2. Read the program with GX Works2 programming software or other software to change the PLC type.
3. Modify the program, connect the new FX PLC, and write the program to the controller.

Although the number of inputs/outputs is the same, the external size is smaller, so only minimal hardware design changes are needed for the mounting method and wiring.

Connecting to an FX0N PLC

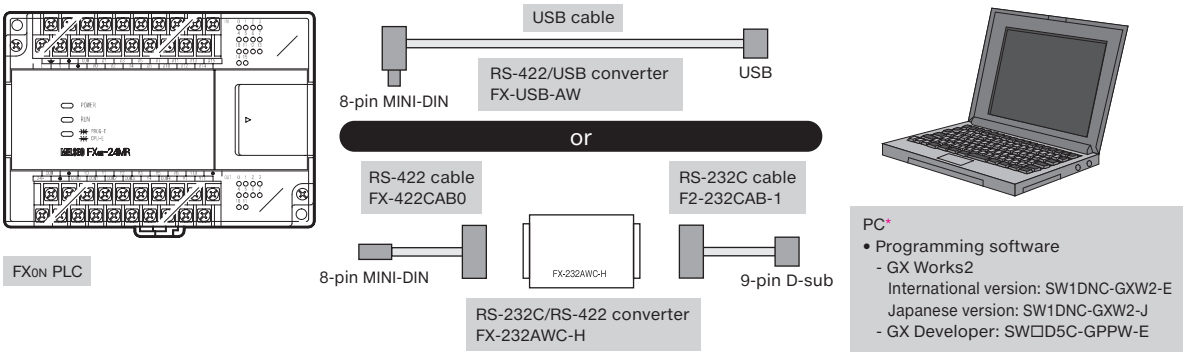

*: Refer to the programming software manual being used for the specified personal computer operating environment.

Differences between FX0N and FX3G

Devices	Auxiliary relays, timers, counters, states, data registers, pointers
Functions	Input filter adjustment, pulse output, high-speed counter, calculation speed
Expansion devices	Extension units, extension blocks, special function blocks, special adapters, memory cassettes
Exterior	External dimensions (see figure below), terminal layouts/names

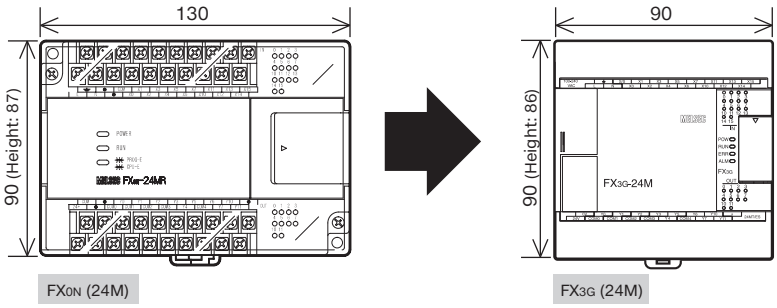

Unit: mm

Program modification required.

Available on the Mitsubishi Electric FA Global site.

When replacing the FX0N with the FX3G, the program must be modified because internal device assignments and functions are different.

Be sure to refer to **TECHNICAL BULLETIN FAM-A-0041 (FX0N)**.

How to replace each model

Repair period
Until December 31, 2022

Updating an FX1S PLC

Follow the procedure below to read out the data from an FX1S PLC and to convert the current FX PLC program.

1. Connect the FX1S PLC to the personal computer using the RS-422/USB or RS-232C/RS-422 converter and cables.
2. Read the program with GX Works2 programming software to change the PLC type.
3. Modify the program, connect the new FX PLC, and write the program to the controller.

The external shape, terminal size, and other factors are nearly identical, so no major hardware design changes are needed for the mounting method and wiring.

Connecting to an FX1S PLC

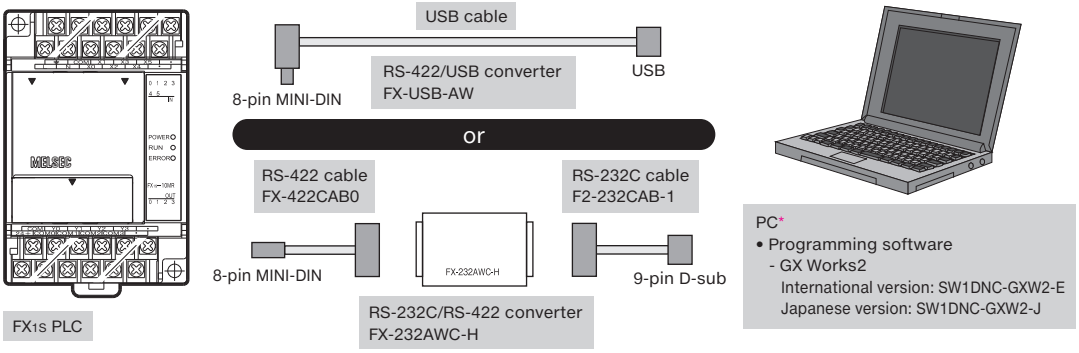

*: Refer to the programming software manual being used for the specified personal computer operating environment.

Differences between FX1S and FX3S

Devices	Auxiliary relays, timers, counters, states, data registers, pointers
Functions	Input filter adjustment (input filter value when set to 0), pulse output, high-speed counter, calculation speed
Expansion devices	Special adapters, expansion board, memory cassettes
Exterior	Terminal layouts/names

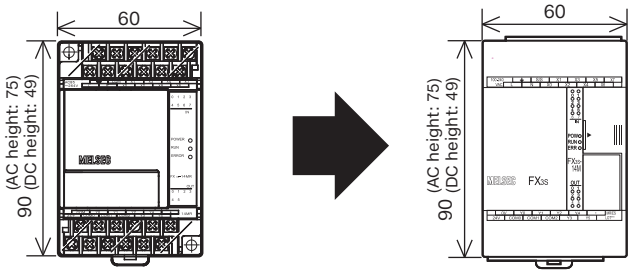

FX1S (14M)

FX3S (14M)

Unit: mm

Program modification required. Available on the Mitsubishi Electric FA Global site.

When replacing the FX1S with the FX3S, the program must be modified because internal device assignments and functions are different.
Other restrictions apply when programming an FX3S series with GX Developer.
Be sure to refer to **TECHNICAL BULLETIN FAM-A-0042 (FX1S)/FAM-A-0043 (FX3S)**.

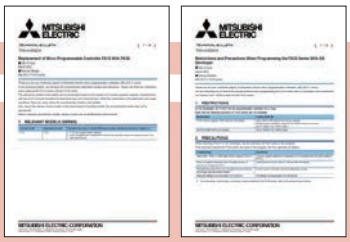

Updating an FX1N or FX1NC PLC

Follow the procedure below to read out the data from an FX1N or FX1NC PLC and to convert the current FX PLC program.

1. Connect the FX1N/FX1NC PLC to the personal computer using the RS-422/USB or RS-232C/RS-422 converter and cables.
2. Read the program with GX Works2 programming software or other software to change the PLC type.
3. Modify the program, connect the new FX PLC, and write the program to the controller.

The external shape, terminal size, and other factors are nearly identical, so no major hardware design changes are needed for the mounting method and wiring.

Connecting to an FX1N/FX1NC PLC

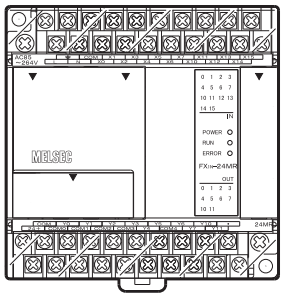

FX1N, FX1NC PLC
(FX1N PLC shown in figure.)

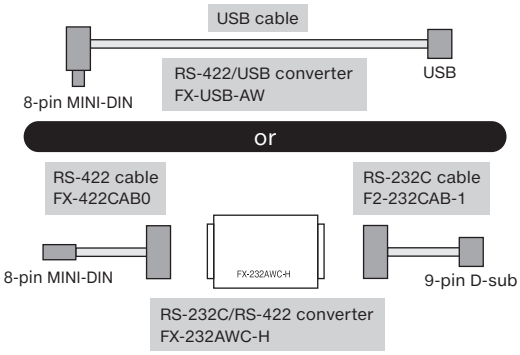

PC*
- Programming software
  - GX Works2
    International version: SW1DNC-GXW2-E
    Japanese version: SW1DNC-GXW2-J
  - GX Developer: SW□D5C-GPPW-E

*: Refer to the programming software manual being used for the specified personal computer operating environment.

Differences between FX1N/FX1NC and FX3G/FX3GC

Devices	Auxiliary relays, timers, counters, states, data registers, pointers
Functions	Pulse output, high-speed counter, calculation speed, power supply specifications (DC power supply type)
Expansion devices	Extension units, special function blocks, special adapters, expansion board, memory cassettes
Exterior	External dimensions (see figure below), terminal layouts/names

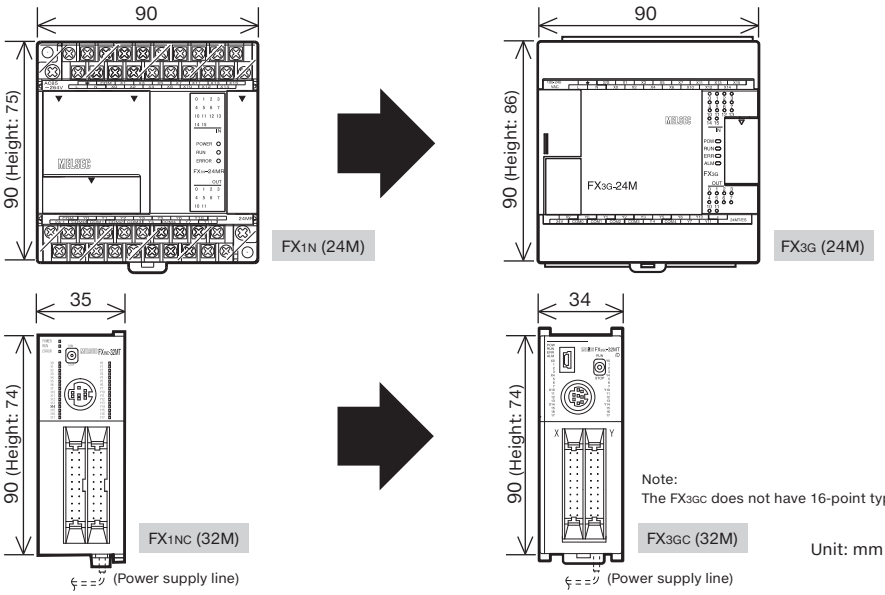

Note:
The FX3GC does not have 16-point type.

Unit: mm

Program modification required.

Available on the Mitsubishi Electric FA Global site.

When replacing the FX1N/FX1NC with the FX3G/FX3GC, the program must be modified because internal device assignments and functions are different.
Be sure to refer to the **FX (FX1N/FX1NC)→FX3 series Replacement Guidance (JY997D57901)**.

How to replace each model

Updating an FX2N or FX2NC PLC

Follow the procedure below to read out the data from an FX2N or FX2NC PLC and to convert the current FX PLC program.

1. Connect the FX2N/FX2NC PLC to the personal computer using the RS-422/USB or RS-232C/RS-422 converter and cables.
2. Read the program with GX Works2 programming software or other software to change the PLC type.
3. Modify the program, connect the new FX PLC, and write the program to the controller.

The external shape, terminal size, and other factors are nearly identical, so no major hardware design changes are needed for the mounting method and wiring.

Connecting to an FX2N/FX2NC PLC

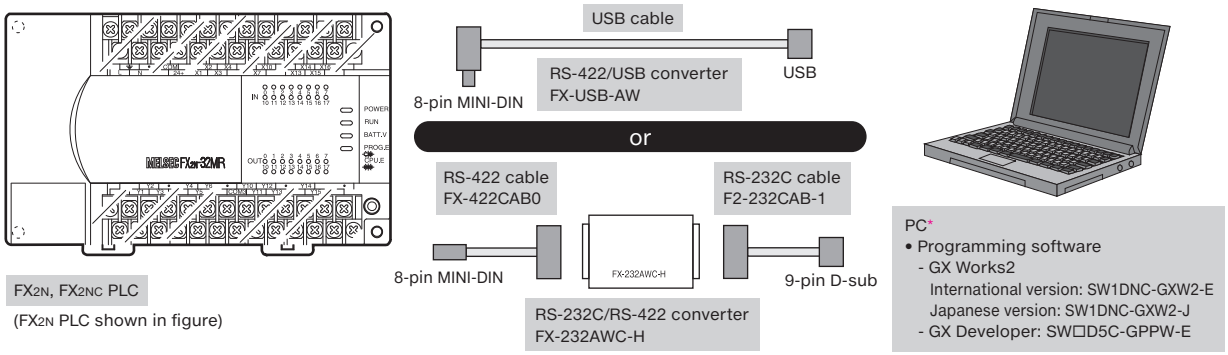

*: Refer to the programming software manual being used for the specified personal computer operating environment.

Differences between FX2N/FX2NC and FX3U/FX3UC

Devices	Auxiliary relays, timers, counters, states, data registers, pointers
Functions	Input filter adjustment, pulse output, high-speed counter, calculation speed
Expansion devices	Special function blocks, special adapters, expansion board, memory cassettes
Exterior	External dimensions (see figure below), terminal layouts/names

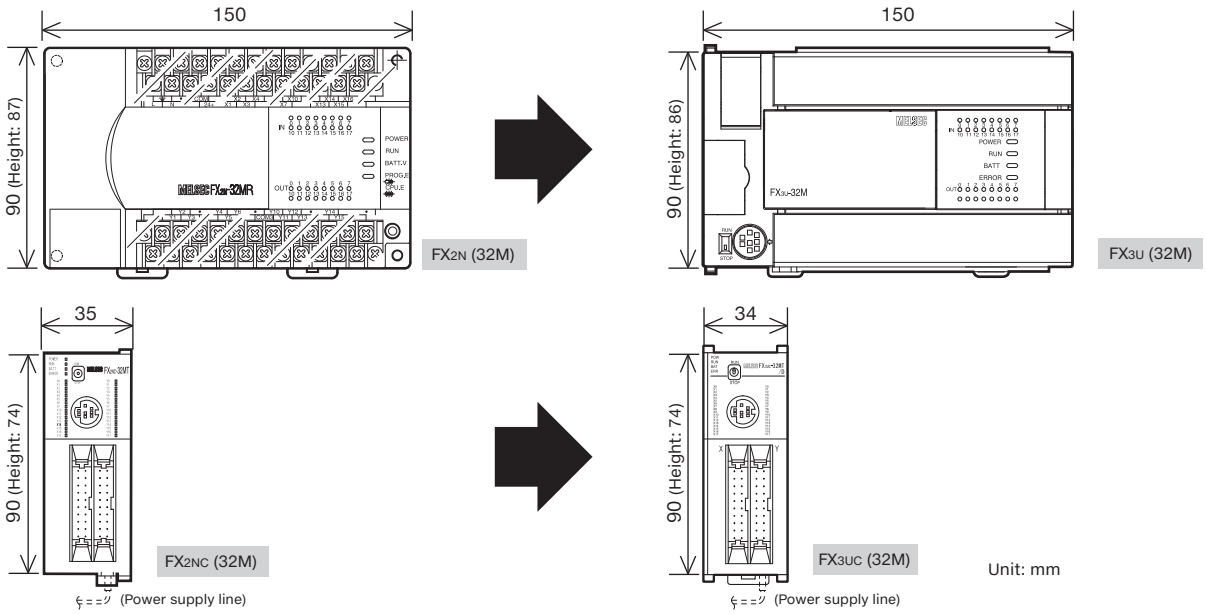

Program modification required.

Available on the Mitsubishi Electric FA Global site.

When replacing the FX2N/FX2NC with the FX3U/FX3UC, the program must be modified because internal device assignments and functions are different.

Be sure to refer to the **FX (FX2N/FX2NC)→FX3 series Replacement Guidance (JY997D48001)**.

Frequently Asked Questions (For FX2N(C))

PLC

Q	What is the difference in the memory capacity?
A	The FX2N(C) can save up to 8,000 steps, or up to 16,000 steps when adding the EEPROM-16. The FX3U(C) can save up to 64,000 steps.
Q	How different are the communication speeds of the internal programming ports?
A	The FX2N(C) offers up to 19.2 kbps (or 9.6 kbps for versions earlier than 3.00), while the FX3U(C) offers up to 115.2 kbps.
Q	Can the FX2N wiring be used as is for the FX3U?
A	It can be used as is, but the sink/source switching wiring will increase. COM will be renamed to 0V.
Q	Can FX2NC input/output wiring be used with the FX3UC?
A	It can be used as is.
Q	Can FX2N expansion boards be used with the FX3U?
A	They cannot be used. An FX3U expansion board is required.
Q	Can FX2NC function expansion memory boards be used with the FX3UC?
A	They cannot be used. The FX3UC is equipped with clock functions and inverter communication functions.
Q	Can FX2N memory cassettes be used with the FX3U?
A	They cannot be used. An FX3U memory cassette is required.
Q	Can FX2NC memory boards be used with the FX3UC?
A	They cannot be used. An FX3U memory cassette is required.

System

Q	Can FX0N extension blocks (such as the FX0N-8EX) be connected to the FX3U(C)?
A	They cannot be connected (unless using the FX3UC-32MT-LT). Replace with FX2N extension blocks.
Q	Can FX2N special function blocks be used with the FX3U?
A	They can be used.
Q	Can FX2/FX special blocks be added to the FX3U using the FX2N-CNV-IF as was possible with the FX2N?
A	They cannot be used. Replace with FX3U special blocks.
Q	Can FX2NC special adapters be used for communication with the FX3U as was possible with the FX2N(C)?
A	They cannot be used. Replace with a special communication adapter with the FX3U.

Tools

Q	Can the FX-20P(-E) be used with the FX3U(C)?
A	It can be used. However, the FX2N devices, instruction range, and other specifications will be applied.
Q	Can the FX-PCS/WIN-E be used with the FX3U(C)?
A	It can be used. However, the FX2N devices, instruction range, and other specifications will be applied.
Q	Will the supported GX Works2 and GX Developer versions change if replacing with the FX3U(C)?
A	GX Works2 is supported by Ver. 1.08J or later, and GX Developer is supported by Ver. 8.24A or later (Version 8.18U or later for the FX3UC). Unsupported FX3U(C) versions can also be supported by selecting the FX2N. However, support will be limited to the device range, functional range (of the program size, etc.), and instructions for both the FX2N PLC and the selected PLC model.

Frequently Asked Questions (For FX1N(C), FX1S)

PLC

Q	What is the difference in the memory capacity?
A	The FX1N(C) can save up to 8,000 steps, and the FX1S can save up to 2,000 steps. Meanwhile, the FX3G(C) can save up to 32,000 steps, and the FX3S can save up to 16,000 steps (with a program capacity of 4,000 steps).
Q	How different are the communication speeds of the built-in RS-422 programming ports?
A	The FX1N(C) offers up to 19.2 kbps, while the FX1S offers up to 9.6 kbps, and the FX3G(C) and FX3S offer up to 115.2 kbps.
Q	Can the FX1N wiring be used as-is with the FX3G?
A	It can be used as is, but the sink/source switching wiring will increase. COM will be renamed to 0V.
Q	Can FX1NC input/output wiring be used with the FX3GC?
A	It can be used as is.
Q	Can FX1N and FX1S expansion board be used with the FX3G and FX3S?
A	They cannot be used. An FX3G expansion board is required.
Q	Can FX1N memory cassettes be used with the FX3G and FX3S?
A	They cannot be used. An FX3G memory cassette is required.
Q	Can the FX1N display unit be used with the FX3G and FX3S?
A	It cannot be used. FX3G and FX3S display modules are required.

System

Q	Can FX0N extension units and extension blocks (such as the FX0N-8EX) be connected to the FX3G(C)?
A	They cannot be connected. Replace with FX2N extension units or extension blocks.
Q	Can FX0N-3A special function blocks be used with the FX3G(C)?
A	They cannot be used. Use the FX3U-3A-ADP for the FX3G(C).
Q	Can FX2N communication special adapter be added to the FX3G(C) as was possible with the FX1N(C)?
A	The FX2N-16CCL-M, FX2N-32CCL, FX2N-64CL-M, FX3U-16CCL-M, and FX3U-64CCL can be used with the FX3G(C).
Q	Can FX2NC special adapters be used for communication with the FX3G(C) and FX3S as was possible with the FX1N(C) and FX1S?
A	They cannot be used. Replace with a special adapter for communication with the FX3U. The FX3G-CNV-ADP is required to connect to the FX3G, and the FX3S-CNV-ADP is required to connect to the FX3S.

Tools

Q	Can the FX-20P(-E) be used with the FX3G(C) and FX3S?
A	It can be used. However, the FX1N/FX1S devices, instruction range, and other specifications will be applied.
Q	Can the FX-PCS/WIN-E be used with the FX3G(C) and FX3S?
A	It can be used. However, the FX1N/FX1S devices, instruction range, and other specifications will be applied.
Q	Will the supported GX Works2 and GX Developer versions change if replacing with the FX3G(C) or FX3S series?
A	GX Works2 is supported by Ver. 1.08J and later for the FX3G, Ver. 1.77F and later for the FX3GC, and Ver. 1.492N and later for the FX3S. GX Developer is supported by Ver. 8.72A and later for the FX3G(C). Support for the FX3S is also possible with restrictions by selecting the FX3G. Refer to TECHNICAL BULLETIN FAM-A-0043 for details. Unsupported FX3G versions can also be supported by selecting the FX1N. However, support will be limited to the device range, functional range (of the program size, etc.), and instructions for both the FX1N PLC and the selected PLC model.

Model selection tool

Mitsubishi Electric FA Global site's model selection tool helps you select a model

Just select the modules and options that match your requests to easily create a system configuration diagram that matches the selection, and prepare a list of purchase parts required when placing your order.

Top screen ⇨ [Products] ⇨ [Controllers] ⇨ [Programmable Controllers MELSEC] ⇨ [Product Selection] ⇨ MELSEC-F Series

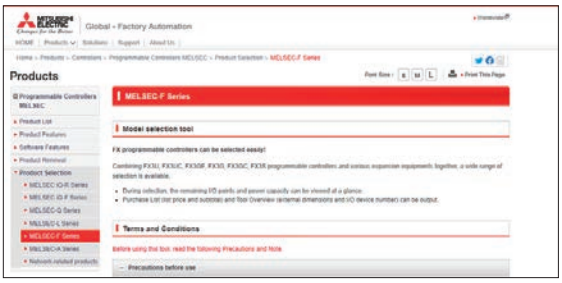

List of functions

- Display of input/output number assignment
- Display of remaining power
- Display of outline dimensions
- Availability of extension connections
- Display of actual number of I/O points and remaining number of points
- Selection of service power supply/external power supply

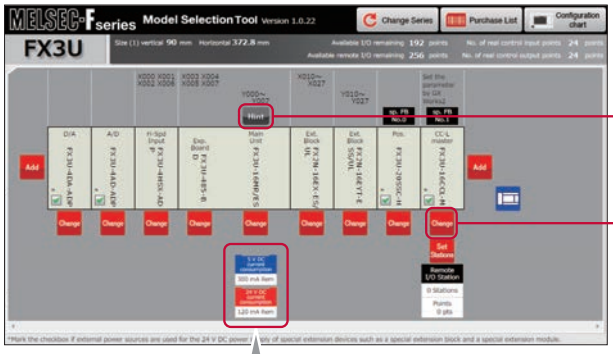

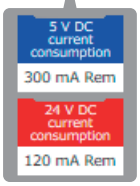

You can confirm the remaining current value of 5 V DC and 24 V DC at a glance.

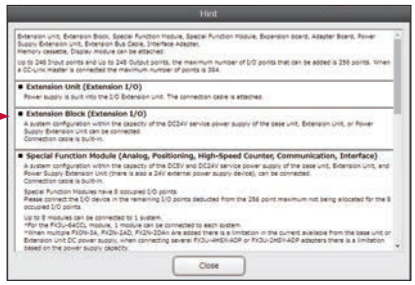

Press the Hint button to check the number of CPU modules that can be extended, and to view detailed explanations.

Press the Change button to insert, exchange, or delete additional modules.

Purchasing List

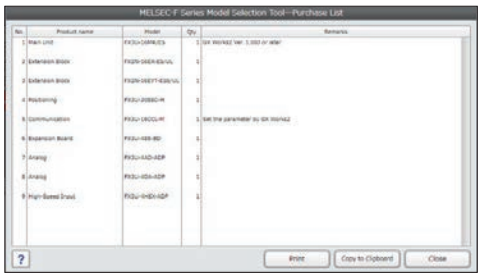

Configuration drawing

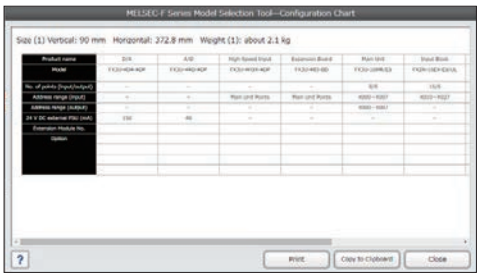

Technical consultations by phone

Technical consultations are available directly over the phone.

Product manuals

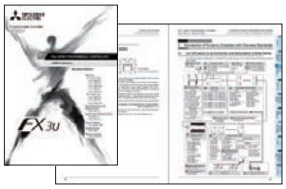

In addition to manuals for MELSEC-F series PLC and various other products, Mitsubishi Electric also provides manuals for programming and other applications. MELSEC-F series manuals are also available electronically (e-Manual).

Mitsubishi Electric offers a service network capable of supporting FX users around the world.

Global FA centers

For more information on global services, refer to the Mitsubishi Electric FA Global Service Catalog (KK001-C1503).

Mitsubishi Electric FA centers

Mitsubishi Electric FA centers support FX users around the world.

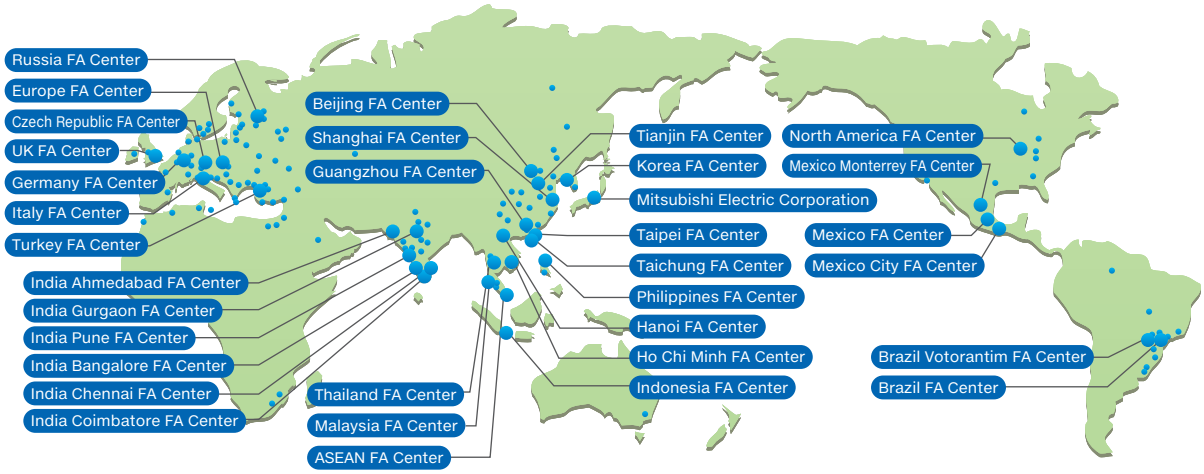

China (Shanghai)	Mitsubishi Electric Automation (China) Ltd. Shanghai FA Center	(TEL:+86-21-2322-3030)
China (Beijing)	Mitsubishi Electric Automation (China) Ltd. Beijing Branch Beijing FA Center	(TEL:+86-10-6518-8830)
China (Tianjin)	Mitsubishi Electric Automation (China) Ltd. Tianjin Branch Tianjin FA Center	(TEL:+86-22-2813-1015)
China (Guangzhou)	Mitsubishi Electric Automation (China) Ltd. Guangzhou Branch Guangzhou FA Center	(TEL:+86-20-8923-6730)
Taiwan (Taichung)	Mitsubishi Electric Taiwan Co., Ltd.	(TEL:+886-4-2359-0688)
Taiwan (Taipei)	Setsuyo Enterprise Co., Ltd.	(TEL:+886-2-2299-9917)
Korea	Mitsubishi Electric Automation Korea Co., Ltd.	(TEL:+82-2-3660-9632)
ASEAN	Mitsubishi Electric Asia Pte. Ltd.	(TEL:+65-6470-2480)
Malaysia	MITSUBISHI ELECTRIC SALES MALAYSIA SDN. BHD.	(TEL:+60-3-7626-5080)
Indonesia	PT. Mitsubishi Electric Indonesia Cikarang Office	(TEL:+62-21-2961-7797)
Vietnam (Hanoi)	Mitsubishi Electric Vietnam Company Limited Hanoi Branch Office	(TEL:+84-24-3937-8075)
Vietnam (Ho Chi Minh)	Mitsubishi Electric Vietnam Company Limited	(TEL:+84-28-3910-5945)
Thailand	Mitsubishi Electric Factory Automation (Thailand) Co., Ltd.	(TEL:+66-2682-6522~31)
Philippines	MELCO Factory Automation Philippines Inc.	(TEL:+63-(0)2-8256-8042)
India (Pune)	Mitsubishi Electric India Pvt. Ltd. Pune Branch	(TEL:+91-20-2710-2000)
India (Gurgaon)	Mitsubishi Electric India Pvt. Ltd. Gurgaon Head Office	(TEL:+91-124-463-0300)
India (Bangalore)	Mitsubishi Electric India Pvt. Ltd. Bangalore Branch	(TEL:+91-80-4020-1600)

India (Chennai)	Mitsubishi Electric India Pvt. Ltd. Chennai Branch	(TEL:+91-4445548772)
India (Ahmedabad)	Mitsubishi Electric India Pvt. Ltd. Ahmedabad Branch	(TEL:+91-7965120063)
India (Coimbatore)	Mitsubishi Electric India Pvt. Ltd. Coimbatore Branch	(TEL:+91-422-4385606)
North America	Mitsubishi Electric Automation, Inc.	(TEL:+1-847-478-2469)
Mexico	Mitsubishi Electric Automation, Inc. Queretaro Office	(TEL:+52-442-153-6014)
Mexico (Mexico City)	Mitsubishi Electric Automation, Inc. Mexico Branch	(TEL:+52-55-3067-7511)
Mexico (Monterrey)	Mitsubishi Electric Automation, Inc. Monterrey Office	(TEL:+52-55-3067-7521)
Brazil	Mitsubishi Electric do Brasil Comércio e Serviços Ltda.	(TEL:+55-11-4689-3000)
Brazil (Votorantim)	MELCO CNC do Brasil Comercio e Servicos S.A.	(TEL:+55-15-3023-9000)
Europe	Mitsubishi Electric Europe B.V. Polish Branch	(TEL:+48-12-347-65-81)
Germany	Mitsubishi Electric Europe B.V. German Branch	(TEL:+49-2102-486-0)
UK	Mitsubishi Electric Europe B.V. UK Branch	(TEL:+44-1707-27-8780)
Czech Republic	Mitsubishi Electric Europe B.V. Czech Branch	(TEL:+420-255719200)
Italy	Mitsubishi Electric Europe B.V. Italian Branch	(TEL:+39-039-60531)
Russia	Mitsubishi Electric (Russia) LLC St. Petersburg Branch	(TEL:+7-812-633-3497)
Turkey	Mitsubishi Electric Turkey A.S. Umraniye Branch	(TEL:+90-216-526-3990)

About this product catalog

Due to the constantly growing product range and new or changed product features, the information in this catalog may be updated without notice. Please contact your Mitsubishi Electric product provider for more details.
Texts, figures and diagrams shown in this product catalog are intended exclusively for explanation and assistance in planning and ordering the programmable logic controllers (PLCs) and the associated accessories. Only the manuals supplied with the modules are relevant for installation, commissioning and handling of the modules and the accessories. The information given in the manuals must be read before installation and commissioning of the modules or software.
If any questions arise regarding the application or use of the PLC modules and accessories described in this catalog, please contact your Mitsubishi Electric product provider.

This catalog confers no industrial property rights or any rights of any other kind, nor does it confer any patent licenses. Mitsubishi Electric Corporation cannot be held responsible for any problems involving industrial property rights which may occur as a result of using the contents noted in this catalog.

- The company names, system names and product names mentioned in this document are either registered trademarks or trademarks of their respective companies.
- In some cases, trademark symbols such as '™' or '®' are not specified in this document.

MITSUBISHI ELECTRIC CORPORATION
HEAD OFFICE: TOKYO BLDG., 2-7-3, MARUNOUCHI, CHIYODA-KU, TOKYO 100-8310, JAPAN
www.MitsubishiElectric.com

L(NA)08846ENG-A 2204(MEE)

Printed Apr. 2022