MITSUBISHI ELECTRIC

Changes for the Better

for a greener tomorrow

Transition from MELSERVO-J2-Super/ J2M Series to J4 Series Handbook

Complete Support for Upgrading Your

MELSERVO-J2S/J2M to MELSERVO-J4

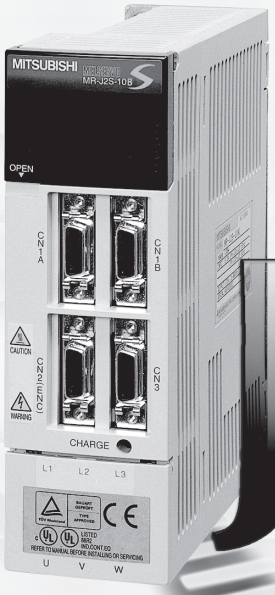

J2S

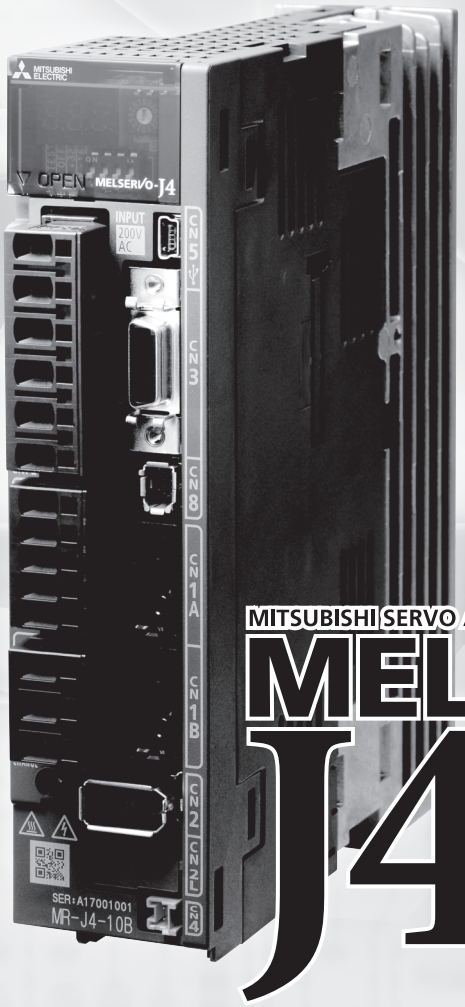

MITSUBISHI SERVO AMPLIFIERS & MOTORS

MELSERVO

J4

● SAFETY INSTRUCTIONS ●

Please read the instructions carefully before using the equipment.

To ensure correct usage of the equipment, make sure to read through this Replacement Manual, the Instruction Manual, the Installation Guide, and the Appended Documents carefully before attempting to install, operate, maintain, or inspect the equipment. Do not use the equipment until you have a full knowledge of the equipment, safety information and instructions.
In this Replacement Manual, the safety instruction levels are classified under "WARNING" and "CAUTION".

⚠ WARNING	Indicates that incorrect handling may cause hazardous conditions, resulting in death or severe injury.
⚠ CAUTION	Indicates that incorrect handling may cause hazardous conditions, resulting in medium or slight injury to personnel or may cause physical damage.

Note that the ⚠ CAUTION level may lead to a serious consequence according to conditions.
Please follow the instructions of both levels because they are important to personnel safety.
What must not be done and what must be done are indicated by the following diagrammatic symbols.

⃠	Indicates prohibition (what must not be done). For example, "No Fire" is indicated by ⃠.
●	Indicates obligation (what must be done). For example, grounding is indicated by ⏚.

In this Replacement Manual, instructions of a lower level than the above, such as those that do not cause physical damage or instructions for other functions, are classified under "POINT".
After reading this Instruction Manual, keep it accessible to the operator.

1. To prevent electric shock, note the following

⚠ WARNING

- Before wiring or inspection, turn off the power and wait for 15 minutes or more (when 30 kW or more is used, 20 minutes or more) until the charge lamp turns off. Then, confirm that the voltage between P+ (P) and N- (N) (when 30 kW or more is used, L+ and L-) is safe with a voltage tester and others. Otherwise, an electric shock may occur. In addition, when confirming whether the charge lamp is off or not, always confirm it from the front of the servo amplifier.
- Ground the servo amplifier and servo motor securely.
- Any person who is involved in wiring and inspection should be fully competent to do the work.
- Do not attempt to wire the servo amplifier and servo motor until they have been installed. Doing so may cause an electric shock.
- Do not operate switches with wet hands. Otherwise, it may cause an electric shock.
- The cables should not be damaged, stressed, loaded, or pinched. Otherwise, it may cause an electric shock.
- During power-on or operation, do not open the front cover of the servo amplifier. Otherwise, it may cause an electric shock.
- Do not operate the servo amplifier with the front cover removed. High-voltage terminals and charging area are exposed and you may get an electric shock.
- Except for wiring and periodic inspection, do not remove the front cover of the servo amplifier even if the power is off. The servo amplifier is charged and you may get an electric shock.
- To prevent electric shock, always connect the protective earth (PE) terminal (⏚ marked) of the servo amplifier to the protective earth (PE) of the cabinet.
- To avoid an electric shock, insulate the connections of the power supply terminals.

2. To prevent fire, note the following

⚠ CAUTION

- Install the servo amplifier, servo motor, and regenerative resistor on incombustible material. Installing them directly or close to combustibles will lead to a fire.
- Be sure to connect a magnetic contactor between the power supply and the main circuit power supply (L1/L2/L3) of the servo amplifier, in order to configure a circuit that shuts off the power supply by the magnetic contactor. If the magnetic contactor is not connected, a continuous flow of a large current may cause smoke or a fire when the servo amplifier malfunctions.
- When using the regenerative resistor, switch power off with the alarm signal. Not doing so may cause smoke and fire when a regenerative transistor malfunctions or the like may overheat the regenerative resistor.
- Provide adequate protection to prevent screws and other conductive matter, oil and other combustible matter from entering the servo amplifier and servo motor.
- Always connect one no-fuse breaker or one fuse for each servo amplifier between the power supply and the main circuit power supply (L1/L2/L3) of the servo amplifier (including the converter unit) in order to configure a power supply shut-off on the side of the servo amplifier's power supply. If a no-fuse breaker or fuse is not connected, continuous flow of a large current may cause smoke and fire when the servo amplifier malfunctions.

3. Injury prevention

⚠ CAUTION

- Only the voltage specified in the Instruction Manual should be applied to each terminal. Otherwise, a burst, damage, etc. may occur.
- The cables must be connected to the correct terminals. Otherwise, a burst, damage, etc. may occur.
- Ensure that the polarity (+/-) is correct. Otherwise, a burst, damage, etc. may occur.
- The servo amplifier heat sink, regenerative resistor, servo motor, etc. may be hot while power is on or for some time after power-off. Take safety measures, e.g. provide covers, to avoid accidentally touching the parts (cables, etc.) by hand.
- During operation, never touch the rotor of the servo motor. Otherwise, it may cause injury.

4. Additional instructions

The following instructions should also be fully noted. Incorrect handling may cause a malfunction, injury, electric shock, fire, etc.

(1) Transportation/installation

⚠ CAUTION

- Transport the products correctly according to their mass.
- Stacking in excess of the specified number of product packages is not allowed.
- Do not hold the front cover when transporting the servo amplifier. Otherwise, it may drop.
- Install the servo amplifier and the servo motor in a load-bearing place in accordance with the Instruction Manual.
- Do not get on or put heavy load on the equipment.
- The equipment must be installed in the specified direction.
- Secure the prescribed distance between the servo amplifier and the inner surface of the cabinet or other devices.
- Do not install or operate the servo amplifier and servo motor which have been damaged or have any parts missing.
- Do not block the intake and exhaust areas of the servo amplifier. Otherwise, it may cause a malfunction.
- Do not drop or strike the servo amplifier and servo motor. Isolate them from all impact loads.
- When you keep or use the equipment, please fulfill the following environment.

Item		Environment
Ambient temperature	Operation	0 ˚C to 55 ˚C (non-freezing)
	Storage	-20 ˚C to 65 ˚C (non-freezing)
Ambient humidity	Operation	90 %RH or less (non-condensing)
	Storage	
Ambience		Indoors (no direct sunlight) and free from corrosive gas, flammable gas, oil mist, dust, and dirt
Altitude		1000 m or less above sea level
Vibration resistance		5.9 m/s^2 or less at 10 to 55 Hz (directions of X, Y, Z axes)

- Contact your local sales if the product has been stored for an extended period of time.
- When handling the servo amplifier, be careful about the edged parts such as corners of the servo amplifier.
- The servo amplifier must be installed in a metal cabinet.
- When fumigants that contain halogen materials, such as fluorine, chlorine, bromine, and iodine, are used for disinfecting and protecting wooden packaging from insects, they cause a malfunction when entering our products. Please take necessary precautions to ensure that remaining materials from fumigant do not enter our products, or treat packaging with methods other than fumigation, such as heat treatment. Additionally, disinfect and protect wood from insects before packing the products.

(2) Wiring

⚠ CAUTION

- Wire the equipment correctly and securely. Otherwise, the servo motor may operate unexpectedly.
- Do not install a power capacitor, surge killer, or radio noise filter (optional FR-BIF) on the output side of the servo amplifier.
- Because installation of these items may cause the servo motor to malfunction, connect the wires to the correct phase terminals (U/V/W) of the servo amplifier and servo motor power supply.
- Directly connect the servo amplifier power output (U/V/W) to the servo motor power input (U/V/W). Do not let a magnetic contactor, etc. intervene. Otherwise, it may cause a malfunction.

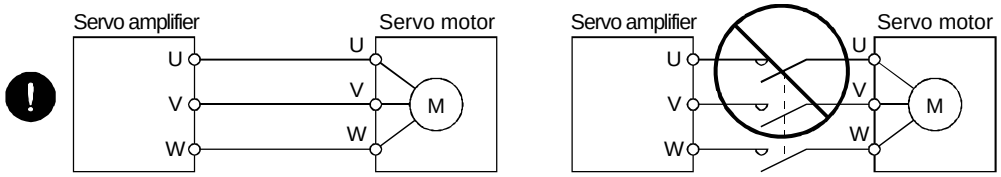

- The connection diagrams in this Instruction Manual are shown for sink interfaces, unless stated otherwise.
- The surge absorbing diode installed to the DC relay for control output should be fitted in the specified direction. Otherwise, the emergency stop and other protective circuits may not operate.

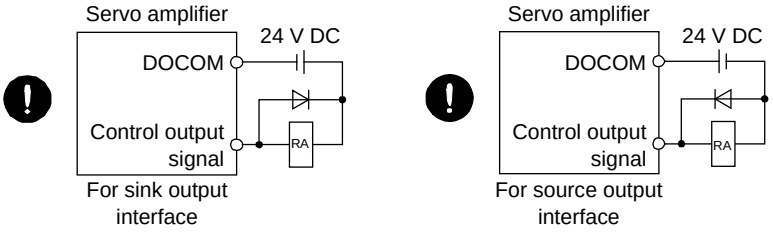

- When the cable is not tightened enough to the terminal block, the cable or terminal block may generate heat because of the poor contact. Be sure to tighten the cable with specified torque.
- To avoid a malfunction, do not connect the U, V, W, and CN2 phase terminals of the servo amplifier to the servo motor of an incorrect axis.
- Configure a circuit to turn off EM2 or EM1 when the main circuit power is turned off to prevent an unexpected restart of the servo amplifier.

(3) Trial run/adjustment

⚠ CAUTION

- Before operation, check the parameter settings. Improper settings may cause some machines to operate unexpectedly.
- Never perform extreme adjustment or changes to the parameters; otherwise, the operation may become unstable.
- Keep away from moving parts in a servo-on state.

(4) Usage

⚠ CAUTION

- Provide an external emergency stop circuit to ensure that operation can be stopped and power switched off immediately.
- Do not disassemble, repair, or modify the equipment.

⚠ CAUTION

- Before resetting an alarm, make sure that the run signal of the servo amplifier is off in order to prevent a sudden restart. Otherwise, it may cause an accident.
- The effect of electromagnetic interference must be reduced by using a noise filter or by other means. Electromagnetic interference may be given to the electronic equipment used near the servo amplifier.
- Burning or disassembling a servo amplifier may generate toxic gases. Do not burn or break it.
- Use the servo amplifier with the specified servo motor.
- The electromagnetic brake on the servo motor is designed to hold the motor shaft and should not be used for ordinary braking.
- For such reasons as service life and mechanical structure (e.g. where a ball screw and the servo motor are coupled via a timing belt), the electromagnetic brake may not hold the motor shaft. To ensure safety, install a stopper on the machine side.

(5) Corrective actions

⚠ CAUTION

- Ensure safety by confirming the power off, etc. before performing corrective actions. Otherwise, it may cause an accident.
- When it is assumed that a hazardous condition may occur due to a power failure or product malfunction, use a servo motor with an electromagnetic brake or external brake to prevent the condition.
- Configure an electromagnetic brake circuit so that it is activated by an external EMG stop switch.

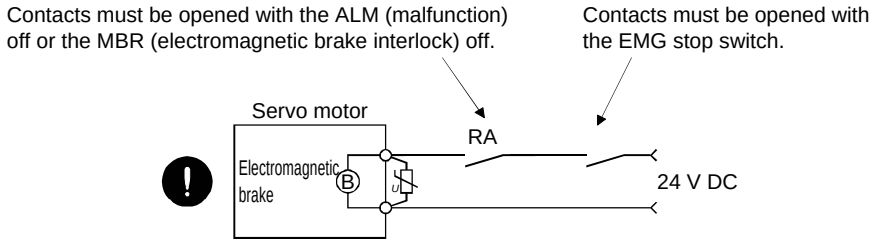

- When any alarm has occurred, eliminate its cause, ensure safety, and deactivate the alarm before restarting operation.
- Provide an adequate protection to prevent unexpected restart after an instantaneous power failure.

(6) Maintenance, inspection and parts replacement

⚠ CAUTION

- Make sure that the emergency stop circuit operates properly such that an operation can be stopped immediately and a power is shut off by the emergency stop switch.
- It is recommended that the servo amplifier be replaced every 10 years when it is used in general environment.
- When using a servo amplifier whose power has not been turned on for a long time, contact your local sales office.

(7) General precautions

- To illustrate details, the equipment in the diagrams of this Replacement Manual may have been drawn without covers and safety guards. When the equipment is operated, the covers and safety guards must be installed as specified. Operation must be performed in accordance with Instruction Manual.

● Disposal of Waste ●

When disposing of this product, the following two laws are applicable, and it is necessary to consider each law. In addition, because the following laws are effective only in Japan, local laws have priority outside Japan (overseas). We ask that the local laws be displayed on the final products or that a notice be issued as necessary.

1. Requirements of the Act on the Promotion of Effective Utilization of Resources (Commonly known as: the Law for Promotion of Effective Utilization of Resources Promotion Law)

   (1) Please recycle this product whenever possible when it becomes unnecessary.

   (2) It is recommended that this product be divided as necessary and sold to appropriate purchasers, as recycled resources are usually divided into iron, electrical parts, and so on, which are then sold to scrap processors.

2. Requirements of the Act on Waste Disposal & Cleaning (Commonly known as: The Waste Disposal Treatment Cleaning Act)

   (1) It is recommended to decrease waste through the sale of recyclables or through any other means as shown in the preceding Paragraph 1.

   (2) In case the unnecessary products cannot be sold and require disposal, such item falls under Industrial waste in the above act.

   (3) It is required that industrial waste be properly dealt with, including manifest management, by commissioning the disposal to an industrial waste disposal contractor licensed under the act.

   (4) Please dispose of batteries (primary batteries) used in servo amplifiers according to local regulations.

Measures against servo amplifier harmonics

This servo amplifier applies to "Harmonics control guidelines for customers receiving high voltage or special high voltage power" (published by current Ministry of Economy, Trade and Industry). Consumers subject to this guideline must check if a harmonic suppression measure is necessary, and measures must be enforced when the limit level is exceeded.

⚠ EEP-ROM life

The number of write times to the EEP-ROM, which stores parameter settings, etc., is limited to 100,000. If the total number of the following operations exceeds 100,000, the servo amplifier may malfunction when the EEP-ROM reaches the end of its useful life.

- Write to the EEP-ROM due to parameter setting changes
- Write to the EEP-ROM due to device changes
- Home position setting condition in the absolute position detection system

STO function of the servo amplifier

Refer to the applicable "Servo Amplifier Instruction Manual" when using the STO function of the servo amplifier.

Dealing with overseas standards

Refer to the following relevant manuals concerning dealing with overseas standards.

«About the manual»

This Replacement Manual and the following Instruction Manuals are necessary when using this servo for the first time. Ensure to prepare them to use the servo safely.

Relevant manuals

Manual name	Manual number
MELSERVO-J4 Series Instructions and Cautions for Safe Use of AC Servos (Packed with the servo amplifier)	IB(NA)0300175
MELSERVO-J4 Servo Amplifier Instruction Manual (Troubleshooting Edition)	SH(NA)030108
MELSERVO Servo Motor Instruction Manual (Vol. 3) (Note 1)	SH(NA)030099
MELSERVO Linear Servo Motor Instruction Manual (Note 2)	SH(NA)030095
MELSERVO Direct Drive Motor Instruction Manual (Note 3)	SH(NA)030097
MELSERVO Linear Encoder Instruction Manual (Note 2, 4)	SH(NA)030096
EMC Installation Guidelines	IB(NA)67303

Note 1. It is necessary for using a rotary servo motor.
2. It is necessary for using a linear servo motor.
3. It is necessary for using a direct drive motor.
4. It is necessary for using a fully closed loop system.

«Cables used for wiring»

The wiring cables mentioned in this Replacement Manual are selected based on an ambient temperature of 40 °C.

«U.S. customary units»

U.S. customary units are not shown in this manual. Convert the values if necessary according to the following table.

Quantity	SI (metric) unit	U.S. customary unit
Mass	1 [kg]	2.2046 [lb]
Length	1 [mm]	0.03937 [inch]
Torque	1 [N•m]	141.6 [oz•inch]
Moment of inertia	1 [(× 10^{-4} kg•m^2)]	5.4675 [oz•$inch^2$]
Load (thrust load/axial load)	1 [N]	0.2248 [lbf]
Temperature	N [°C] × 9/5 + 32	N [°F]

«Display»

The following abbreviations are used for the model names of the servo amplifiers in this Replacement Manual.
[J2S-A]: MR-J2S-_A_
[J2S-B]: MR-J2S-_B_
[J2S-CP]: MR-J2S-_CP_
[J2S-CL]: MR-J2S-_CL_
[J2M-A]: MR-J2M-_A
[J2M-B]: MR-J2M-_B
[J4-A]: MR-J4-_A_
[J4-B]: MR-J4-_B_
Parameter No._ _: [Pr. _ _]

CONTENTS

Part 1: Summary of MR-J2S/MR-J2M Replacement 1-1 to 1-14

1. SUMMARY OF MR-J2S/MR-J2M REPLACEMENT 1-2
2. MAJOR REPLACEMENT TARGET MODEL 1-2
2.1 Servo Amplifier Replacement Target Model 1-2
2.2 Servo Motor Replacement Target Model 1-2
3. FLOW OF REPLACEMENT 1-3
3.1 Summary 1-3
3.2 Flow of Review on Replacement 1-3
3.3 Review on Replacement 1-7
3.3.1 Checking the system prior to replacement 1-7
3.3.2 Determination of base replacement model 1-8
3.3.3 Mounting compatibility check 1-12
3.3.4 Detailed review on replacement model 1-12
3.3.5 Peripheral equipment check 1-12
3.3.6 Startup procedure check 1-12
4. RELATED MATERIALS 1-12
4.1 Catalog 1-12
4.2 Instruction Manual 1-12
4.3 Replacement Manual 1-13
4.4 Renewal Tool 1-13
4.5 Replacement Tool for Replacing MR-J2S series with MR-J4 series 1-13
4.6 MITSUBISHI ELECTRIC FA Global Website 1-13

Part 2: Review on Replacement of MR-J2S-_A_ with MR-J4-_A_ 2-1 to 2-46

1. SUMMARY 2-2
2. CASE STUDY ON REPLACEMENT OF MR-J2S-_A_ 2-2
2.1 Review on Replacement Method 2-2
2.2 Replacement Method 2-2
3. DIFFERENCES BETWEEN MR-J2S-_A_ AND MR-J4-_A_ 2-4
3.1 Function Comparison Table 2-4
3.2 Function List 2-5
3.3 Comparison of Standard Connection Diagrams 2-6
3.4 List of Corresponding Connectors and Terminal Blocks 2-8
3.5 Comparison of Peripheral Equipment 2-13
3.6 Comparison of Parameters 2-14
3.6.1 Setting requisite parameters upon replacement 2-14
3.6.2 Parameter comparison list 2-16
3.6.3 Comparison of parameter details 2-19
3.7 Important Points for Replacement (Command Pulse Logic Settings) 2-45

Part 3: Review on Replacement of MR-J2S-_B_ with MR-J4-_B_ 3-1 to 3-32

1. SUMMARY 3-2
2. CASE STUDY ON REPLACEMENT OF MR-J2S-_B_ 3-3
2.1 Review on Replacement Method 3-3
2.2 Replacement Method 3-4
3. DIFFERENCES BETWEEN MR-J2S-_B_ AND MR-J4-_B_ 3-7
3.1 Function Comparison Table 3-7
3.2 Function List 3-7

3.3 Comparison of Networks 3-8
3.3.1 Comparison of servo system network specifications 3-8
3.4 Comparison of Standard Connection Diagrams 3-10
3.5 List of Corresponding Connectors and Terminal Blocks 3-11
3.6 Comparison of Peripheral Equipment 3-14
3.7 Comparison of Parameters 3-15
3.7.1 Setting requisite parameters upon replacement 3-16
3.7.2 Parameter comparison list 3-17
3.7.3 Comparison of parameter details 3-19
3.8 Important Points for Replacement 3-31

Part 4: Review on Replacement of MR-J2S-_CP_/CL_ with MR-J4-_A_-RJ 4-1 to 4-52

1. SUMMARY 4-2
2. CASE STUDY ON REPLACEMENT OF MR-J2S-_CP_/CL_ 4-2
2.1 Consideration of Replacement Method 4-2
2.2 Replacement Method 4-2
3. DIFFERENCES 4-4
3.1 Function Comparison Table 4-4
3.2 Function List 4-7
3.3 Comparison of Standard Connection Diagrams 4-9
3.4 List of Corresponding Connectors and Terminal Blocks 4-11
3.5 Comparison of Peripheral Equipment 4-14
3.6 Comparison of Parameters 4-15
3.6.1 Setting requisite parameters upon replacement 4-15
3.6.2 Parameter comparison list 4-17
3.6.3 Comparison of parameter details 4-20
3.7 Comparison of Communication Commands 4-40

Part 5: Review on Replacement of MR-J2S-30 kW or Higher Capacity Models with MR-J4-DU_ 5-1 to 5-58

1. FUNCTIONS AND CONFIGURATION 5-2
1.1 Differences Between MR-J2S-30 kW or Higher Capacity Models and MR-J4-DU_ 5-2
1.2 Combination of Converter Unit, Drive Unit, and Servo Motor 5-3
1.3 Configuration with Peripheral Equipment 5-4
1.4 Installation 5-6
1.5 Magnetic Contactor Control Connector (CNP1) [Exclusively for MR-J4-DU_] 5-8
2. SIGNALS AND WIRING 5-10
2.1 Comparison of Standard Connection Diagrams 5-10
2.2 Power-on Sequence 5-15
2.3 List of Corresponding Connectors and Terminal Blocks 5-20
3. PARAMETERS 5-25
3.1 Comparison of Parameters 5-25
4. CHARACTERISTICS 5-30
4.1 Capacity of Power Source Facility and Generation Loss 5-30
4.2 Inrush Current When Turning On the Main Circuit/Control Circuit Power Supply 5-31
5. OPTIONS AND PERIPHERAL EQUIPMENT 5-32
5.1 Comparison Table of Cable Option Combinations 5-32
5.1.1 MR-J3CDL05M (0.5 m) Protection Coordination Cable 5-32
5.2 Wire Selection Example 5-33
5.2.1 MR-J2S-series power supply wire size 5-34
5.2.2 MR-J4-series, power supply wire size 5-35

5.3 Selection of No-Fuse Breakers, Fuses, and Magnetic Contactors (example) 5-37
5.3.1 MR-J2S-series, no-fuse breakers and magnetic contactors (recommended) 5-37
5.3.2 MR-J4-series, no-fuse breakers, fuses, and magnetic contactors (recommended) 5-37
5.4 FR-BU2-(H) Brake Unit 5-39
5.4.1 Selection 5-39
5.4.2 Parameter setting of brake units 5-40
5.4.3 Connection example 5-40
5.4.4 Dimensions 5-56
5.5 Comparison of Peripheral Equipment 5-57

Part 6: Review on Replacement of MR-J2M with MR-J4 6-1 to 6-20

1. SUMMARY 6-2
2. CASE STUDY ON REPLACEMENT OF MR-J2M 6-2
2.1 Replacement Method 6-2
2.2 Equipment Configuration 6-2
3. DIFFERENCES BETWEEN MR-J2M-A AND MR-J4-_A_ 6-3
3.1 Function Comparison Table 6-3
3.1.1 General 6-3
3.2 Comparison of Standard Connection Diagrams 6-4
3.3 List of Corresponding Connectors and Terminal Blocks 6-5
3.4 Comparison of Peripheral Equipment 6-8
3.5 Comparison of Parameters 6-8
3.5.1 Parameter comparison list 6-8
4. DIFFERENCES BETWEEN MR-J2M-B AND MR-J4-_B_ 6-11
4.1 Review on Replacement Method 6-11
4.2 Replacement Method 6-12
4.3 Function Comparison Table 6-13
4.4 Comparison of Standard Connection Diagrams 6-14
4.5 List of Corresponding Connectors and Terminal Blocks 6-15
4.6 Comparison of Peripheral Equipment 6-16
4.7 Comparison of Parameters 6-17
4.7.1 Parameter comparison list 6-17

Part 7: Common Reference Material 7-1 to 7-102

1. SPECIFICATION DIFFERENCES 7-2
1.1 Detailed Specification/Function Differences 7-2
1.2 Servo amplifier 7-6
1.2.1 Main circuit terminal block 7-6
1.2.2 Comparison of encoder signals (CN2) 7-9
1.2.3 Dynamic brake: coasting distance 7-10
1.2.4 Forced stop deceleration function selection 7-16
1.2.5 24 V DC power supply for interface: built-in ⇒ outside supply requisite 7-17
1.2.6 Servo setup software: Setup software (SETUP161E) ⇒ MR Configurator2 7-18
1.2.7 Communication I / F: RS-232C ⇒ USB 7-18
1.2.8 Servo amplifier initializing time 7-19
1.2.9 The pulse width of the encoder Z-Phase pulse 7-21
2. SERVO AMPLIFIER DIMENSIONS/ATTACHMENT DIFFERENCES 7-22
2.1 MR-J2S ⇒ MR-J4 Comparison Table of Servo Amplifier Dimensions/ Installation Differences 7-22
2.1.1 General-purpose interface/SSCNET interface 200 V class (22 kW or less) 7-22

2.1.2 General-purpose interface/SSCNET interface 100 V class (0.4 kW or less) 7-22
2.1.3 Built-in positioning function/program supported 200 V class (7 kW or less) 7-23
2.1.4 Built-in positioning function/program supported 100 V class (0.4 kW or less) 7-23
2.1.5 General-purpose interface drive unit/SSCNET interface drive unit 200 V class (30 kW or more) 7-27
2.1.6 General-purpose interface/SSCNET interface 400 V class (22 kW or less) 7-29
2.1.7 General-purpose interface drive unit/SSCNET interface drive unit 400 V class (30 kW or more) 7-32
2.2 MR-J2M-_ ⇒ MR-J4-_ Comparison Table of Servo Amplifier Dimensions/ Installation Differences 7-35
2.3 MR-J2S-_A_/MR-J2S-_CP_/MR-J2S-_CL_ Parameter Diversion Procedure 7-39
2.3.1 Operation procedure of parameter conversion 7-39
2.3.2 MR-J2S-_A_/MR-J2S-_CP_/MR-J2S-_CL_ parameter diversion procedure 7-40
2.3.3 Parameter reading from the servo amplifier MR-J2S-_A_/MR-J2S-_CP_/MR-J2S-_CL_ . 7-41
2.3.4 Converting the parameters of MR-J2S-_A_/MR-J2S-_CP_/MR-J2S-_CL_ and writing them to the MR-J4-_A_(-RJ) servo amplifier 7-43
2.3.5 Conversion rules 7-47
2.4 MR-J2S-_B_ Parameter Diversion Procedure 7-82
2.4.1 Changing QD75M to QD77MS/LD77MS 7-83
2.4.2 Changing the motion controller A series/Q17nCPU to Q17nDSCPU/Q170MSCPU(-S1) . 7-86
2.4.3 Conversion rules (MR-J2S-_B_ => MR-J4-_B_) 7-88
3. COMMON POINTS TO NOTE 7-94
3.1 Points to Note When Replacing a Battery 7-94
3.1.1 Servo amplifier battery mounting method 7-95
3.1.2 Disassembly method 7-96
3.1.3 Replacement procedure of MR-BAT6V1SET built-in battery 7-96
4. HC-_FS /HA-_FS MOTOR DRIVE 7-97
4.1 Parameter setting 7-97
4.2 Corresponding Software Version 7-98
4.2.1 Method for checking the software version 7-101
4.3 Overload protection characteristics (Important Points for Combining the drive unit MR-J4-DU55K_4 and HA-LFS motor) 7-102

Part 8: Review on Replacement of Motor 8-1 to 8-68

1. SERVO MOTOR REPLACEMENT 8-2
1.1 Servo Motor Substitute Model and Compatibility 8-2
2. COMPARISON OF SERVO MOTOR SPECIFICATIONS 8-12
2.1 Comparison of Servo Motor Mounting Dimensions 8-12
2.2 Detailed Comparison of Servo Motor Mounting Dimensions 8-16
2.3 Comparison of Mounting Dimensions for Geared Servo Motors 8-18
2.4 Comparison of Geared Servo Motors 8-24
2.4.1 Comparison of actual reduction ratios for geared servo motors 8-24
2.4.2 Comparison of reducer efficiency of geared servo motors 8-24
2.5 Comparison of Moment of Inertia 8-25
2.6 Comparison of Servo Motor Connector Specifications 8-36
2.7 Comparison of Servo Motor Torque Characteristics 8-53

Part 9: Review on Replacement of Optional Peripheral Equipment 9-1 to 9-52

1. COMPARISON TABLE OF REGENERATIVE OPTION COMBINATIONS 9-2
1.1 Regenerative Options (200 V/100 V) 9-3

1.1.1 Combination and regenerative power for the MR-J2S series 9-3
1.1.2 Combination and regenerative power for the MR-J2M series 9-3
1.1.3 Combination and regenerative power for MR-J4 series (replacement model) 9-4
1.2 External Form Comparison 9-5
1.3 Regenerative Options (400 V class) 9-6
1.3.1 Combination and regenerative power for the MR-J2S series 9-6
1.3.2 Combination and regenerative power for MR-J4 series (replacement model) 9-7
1.4 External Form Comparison 9-8
2. COMPARISON TABLE OF DYNAMIC BRAKE OPTION COMBINATIONS 9-10
2.1 External Form Comparison 9-11
3. COMPARISON TABLE OF CABLE OPTION COMBINATIONS 9-12
4. POWER SUPPLY WIRE SIZE 9-13
4.1 Selection of Power Supply Wire Size (Example) 9-13
4.1.1 MR-J2S-series power supply wire size 9-13
4.1.2 MR-J4-series power supply wire size 9-15
4.2 Selection Example of Crimp Terminals 9-18
4.2.1 MR-J2S-series crimp terminal 9-18
4.2.2 MR-J4-series crimp terminal 9-19
4.3 Selection of Molded-Case Circuit Breaker, Fuse, and Magnetic Contactor (Example) 9-20
4.3.1 MR-J2S series, molded-case circuit breakers, fuses, and magnetic contactors 9-20
4.3.2 MR-J4 series, molded-case circuit breakers, fuses, and magnetic contactors (recommended) 9-21
5. BATTERY 9-23
5.1 MR-J2S-Series Battery 9-23
5.1.1 Battery replacement procedure 9-23
5.2 MR-J2M-Series Battery Unit 9-23
5.3 MR-J4-Series Battery 9-24
5.3.1 Battery replacement procedure 9-24
5.3.2 When using the MR-BAT6V1SET battery 9-25
5.3.3 When using MR-BAT6V1BJ battery for junction battery cable 9-26
5.3.4 When using MR-BT6VCASE battery case 9-27
6. EMC FILTER 9-28
6.1 MR-J2S-Series EMC Filter (200 V/100 V class) 9-28
6.1.1 Dimensions 9-28
6.2 MR-J2S-Series EMC Filter (400 V class) 9-30
6.2.1 Dimensions 9-30
6.3 MR-J4-Series EMC Filter (Recommended) (200 V class) 9-32
6.3.1 Connection example 9-32
6.3.2 Dimensions 9-33
6.4 MR-J4-Series EMC Filter (Recommended) (400 V class) 9-35
6.4.1 Combination with the servo amplifier 9-35
6.4.2 Connection example 9-35
6.4.3 Dimensions 9-35
7. POWER FACTOR IMPROVING AC REACTOR/POWER FACTOR IMPROVING DC REACTOR 9-37
7.1 MR-J2S-Series Power Factor Improving AC Reactor (200 V/100 V class) 9-37
7.2 MR-J2S-Series Power Factor Improving DC Reactor (200 V class) 9-38
7.3 MR-J2S-Series Power Factor Improving AC Reactor (400 V class) 9-39
7.4 MR-J2S-Series Power Factor Improving DC Reactor (400 V class) 9-40
7.5 MR-J4-Series Power Factor Improving DC Reactor (200 V class) 9-41
7.6 MR-J4-Series Power Factor Improving AC Reactor (200 V/100 V class) 9-43
7.7 MR-J4-Series Power Factor Improving DC Reactor (400 V class) 9-45

7.8 MR-J4-Series Power Factor Improving AC Reactor (400 V class) 9-47
8. SETUP SOFTWARE 9-49
8.1 MR-J2S Series Setup Software 9-49
8.1.1 Specifications 9-49
8.2 MR-J4-Series MR Configurator2 9-49
8.2.1 Specifications 9-49
8.3 System Requirements 9-50
8.3.1 Components 9-50
8.3.2 Connection with servo amplifier 9-51
8.3.3 Points to note for use of the USB communication function 9-51

Part 10: Startup Procedure Manual 10-1 to 10-2

1. STARTUP 10-2
1.1 Switching power on for the first time 10-2
1.1.1 Startup procedure 10-2

Appendix 1 Summary of MR-J4_B_-RJ020 + MR-J4-T20 Appendix 1-1 to Appendix 1-74

1. SUMMARY ..... Appendix 1-2
1.1 Features ..... Appendix 1-2
1.1.1 Servo amplifier connectable to SSCNET compatible controller ..... Appendix 1-2
1.1.2 SSCNET conversion unit "MR-J4-T20" ..... Appendix 1-3
2. DIFFERENCES BETWEEN MR-J2S-_B_ AND MR-J4-_B_-RJ020 ..... Appendix 1-4
2.1 Function Comparison Table ..... Appendix 1-4
3. SYSTEM CONFIGURATION ..... Appendix 1-6
4. I/O SIGNAL CONNECTION EXAMPLE ..... Appendix 1-7
5. PARAMETERS ..... Appendix 1-9
6. RS-232C COMMUNICATION CABLE ..... Appendix 1-9
7. LIST OF SERVO MOTOR COMBINATIONS AND SOFTWARE VERSIONS ..... Appendix 1-11
8. LIST OF COMBINATIONS AND SOFTWARE VERSIONS FOR SERVO SYSTEM CONTROLLERS ..... Appendix 1-15
9. SAFETY PRECAUTIONS ..... Appendix 1-17
9.1 Replacing MR-J2S-_B_ Servo Amplifier with MR-J4-_B_-RJ020 Servo Amplifier ..... Appendix 1-17
9.2 Differences with the MR-J2S Series ..... Appendix 1-20
10. ALARM ..... Appendix 1-29
10.1 Alarm/Warning List ..... Appendix 1-29
11. DIMENSIONS ..... Appendix 1-30
11.1 Comparison of Dimensions ..... Appendix 1-30
11.2 Dimensions ..... Appendix 1-31
11.2.1 Servo amplifier ..... Appendix 1-31
11.2.2 Dimensions (MR-J4-T20) ..... Appendix 1-32
11.2.3 Dimensions (MR-J4-_B_-RJ020 + MR-J4-T20) ..... Appendix 1-33
12. MODE SWITCHING METHOD ..... Appendix 1-41
12.1 Mode Switching Method from J2S Compatibility Mode to J4 Mode ..... Appendix 1-41
12.2 Mode Switching Method from J4 Mode to J2S Compatibility Mode ..... Appendix 1-42
13. OPTIONS AND PERIPHERAL EQUIPMENT ..... Appendix 1-43
13.1 Encoder Cable Combination ..... Appendix 1-43
13.2 Encoder Cable List ..... Appendix 1-44
13.3 Details on encoder cable ..... Appendix 1-45
13.4 Large Capacity Servo Cable Connector Set ..... Appendix 1-53
13.4.1 Cable connector set combination ..... Appendix 1-53

13.4.2 MR-J3CDL05M (0.5 m) Protection Coordination Cable ..... Appendix 1-54
13.5 Regenerative Options ..... Appendix 1-55
13.5.1 Combination and regenerative power ..... Appendix 1-55
13.5.2 Regenerative option selection ..... Appendix 1-59
13.5.3 Parameter setting ..... Appendix 1-61
13.5.4 Connecting regenerative options ..... Appendix 1-62
13.6 External Dynamic Brake ..... Appendix 1-67
14. SETTING PARAMETERS ADDED ON MR-J4-_B_-RJ020 SERVO AMPLIFIER ..... Appendix 1-68
14.1 Combination of Motion Controller and Peripheral Software ..... Appendix 1-68
14.2 Parameter Setting Procedure ..... Appendix 1-68
14.2.1 For MELSOFT MT Works2 ..... Appendix 1-68
14.2.2 For MT Developer (software version 00W or later) ..... Appendix 1-71
14.2.3 For MT Developer (software version 00V or earlier) or SW3RNC-GSV ..... Appendix 1-73

Appendix 2 Introduction to Renewal Tool Appendix 2-1 to Appendix 2-110

1. SUMMARY ..... Appendix 2-2
1.1 Compatible Models ..... Appendix 2-2
1.2 Features ..... Appendix 2-2
1.2.1 MR-J2S-_A_ renewal tool/MR-J2S-_CP_ renewal tool ..... Appendix 2-3
1.2.2 MR-J2S-_B_ renewal tool ..... Appendix 2-4
1.3 Renewal Tool Product Names ..... Appendix 2-12
1.4 Renewal Tool Configuration ..... Appendix 2-14
2. RENEWAL TOOL PRODUCT LIST ..... Appendix 2-16
3. BASIC CONFIGURATION ..... Appendix 2-18
3.1 Important Points to Note When Replacing ..... Appendix 2-18
3.2 Selection of Products ..... Appendix 2-19
3.2.1 Replacement selection flow ..... Appendix 2-19
4. REPLACMENT COMBINATION LIST ..... Appendix 2-21
4.1 General-Purpose Interface Replacement Combination List (100 V/200 V Class) ..... Appendix 2-21
4.2 SSCNET Interface Replacement Combination List (100 V/200 V Class) ..... Appendix 2-33
4.3 Built-in Positioning Function Replacement Combination List ..... Appendix 2-45
4.4 General-Purpose Interface Replacement Combination List (400 V Class) ..... Appendix 2-57
4.5 SSCNET Interface Replacement Combination List (400 V Class) ..... Appendix 2-61
5. RENEWAL TOOL CONNECTION DIAGRAM ..... Appendix 2-66
5.1 SC-J2SJ4(CP)KT02K to 3K ..... Appendix 2-66
5.2 SC-J2S(CP)J4KT5K ..... Appendix 2-68
5.3 SC-J2S(CP)J4KT7K ..... Appendix 2-70
5.4 SC-J2SJ4KT15K, 22K ..... Appendix 2-72
5.5 SC-J2SBJ4KT02K to 3K ..... Appendix 2-74
5.6 SC-J2SBJ4KT5K ..... Appendix 2-76
5.7 SC-J2SBJ4KT7K ..... Appendix 2-78
5.8 SC-J2SBJ4KT15K, 22K ..... Appendix 2-80
6. SPECIFICATIONS ..... Appendix 2-82
6.1 Standard Specifications ..... Appendix 2-82
6.2 Terminal Block Specifications ..... Appendix 2-82
6.3 Recommended 24 V DC Power Supply Specifications for Interface ..... Appendix 2-83
7. PARAMETER SETTING ..... Appendix 2-84
7.1 List of General-Purpose Interface Setting Requisite Parameters ..... Appendix 2-84
7.2 List of SSCNET Interface Setting Requisite Parameters ..... Appendix 2-87
7.3 List of Built-in Positioning Function Setting Requisite Parameters ..... Appendix 2-87
8. DIMENSIONS ..... Appendix 2-90

8.1 Renewal Kit ..... Appendix 2-90
8.2 Conversion Cable ..... Appendix 2-107
8.2.1 Conversion cable on the servo amplifier side ..... Appendix 2-107
8.2.2 Power supply conversion cable on the motor side ..... Appendix 2-109
8.2.3 Encoder conversion cable on the motor side ..... Appendix 2-110
8.2.4 Conversion cable for the cooling fan on the motor side ..... Appendix 2-110

Part 1
Summary of MR-J2S/MR-J2M Replacement

This document describes the review items for replacing MR-J2S with MR-J4 and MR-J2M with MR-J4. Some equipment may require review on items not described in this document. Please review those items after viewing the Instruction Manual and the catalogs.

Part 1: Summary of MR-J2S/MR-J2M Replacement

1. SUMMARY OF MR-J2S/MR-J2M REPLACEMENT

In this document, the flow when replacing a system using the MELSERVO "MR-J2S/MR-J2M series" with the "MRJ4 series" is explained.
After deciding the replacement strategy (simultaneous replacement, partial replacement of servo amplifier/servo motor/controller), please proceed with replacement by referring to the corresponding parts of this manual and the manual for each model.

2. MAJOR REPLACEMENT TARGET MODEL

2.1 Servo Amplifier Replacement Target Model

Series	Servo amplifier model
MR-J2S Series	MR-J2S-_A_
	MR-J2S-_B_
	MR-J2S-_CP_
	MR-J2S-_CL_
MR-J2M Series	MR-J2M-P8A+ MR-J2M-_DU
	MR-J2M-P8B+ MR-J2M-_DU

→

Series	Servo amplifier model
MR-J4 Series	MR-J4-_A_
	MR-J4-_B_
	MR-J4-_A_-RJ
	MR-J4-_A_
	MR-J4-_B_

2.2 Servo Motor Replacement Target Model

		Series	Servo motor model
Small capacity	Low inertia	HC-_FS Series	HC-KFS_
	Ultra-low inertia		HC-MFS_
	Flat		HC-UFS_
Medium capacity	medium inertia		HC-SFS_
	Low inertia		HC-LFS_
	Ultra-low inertia		HC-RFS_
	Flat		HC-UFS_
Large capacity	Low inertia	HA-_FS Series	HA-LFS_

→

Series	Servo motor model
HG Series	HG-KR_
	HG-MR_
	HG-KR_
	HG-SR_
	HG-JR_
	HG-RR_
	HG-UR_
	HG-JR_

Note. For details, refer to "Part 8: Review on Replacement of Motor".

POINT

●This document uses the terms "MR-J2S-compatible motor" and "MR-J2-compatible motor" to distinguish the following motors.
MR-J2S-compatible motor: HC-_FS motor (series), HA-_FS motor (series)
MR-J2-compatible motor: HC-_F motor (series), HA-_F motor (series)

3. FLOW OF REPLACEMENT

3.1 Summary

This section describes the flow of replacement when replacing a system using the MR-J2S/MR-J2M series with a system using the MR-J4 series.

3.2 Flow of Review on Replacement

Checking the system prior to replacement

・・・Check the components of the system prior to replacement.
: Refer to "3.3.1 Checking the system prior to replacement" in this document.

↓

Determination of base replacement model

・・・Determine the base replacement model for the servo amplifier/servo motor model used for the system prior to replacement.
: Refer to "3.3.2 Determination of base replacement model" in this document.

↓

Detailed specifications/functions difference check

・・・Determine the base replacement model and check the impact according to the "specification/function" of the replacement model.
: Refer to "Part 7: Common Reference Material" in this document.

↓

Mounting compatibility check

・・・Check the compatibility and the attachment differences in the "Mounting compatibility" items in the list of base replacement models.
: Refer to "Part 7: Common Reference Material, 2. SERVO AMPLIFIER DIMENSIONS / INSTALLATION DIFFERENCES", and "Part 8: Replacement of Motor" in this document.

↓

Detailed review on replacement model

・・・Determine the replacement strategy and perform detailed designing.
: Refer to "Part 2: Review on Replacement of MR-J2S-_A_ with MR-J4-_A_",
"Part 3: Review on Replacement of MR-J2S-_B_ with MR-J4-_B_"
"Part 4: Replacement of MR-J2S-_CP_/CL_ with MR-J4-_A_RJ"
"Part 5: Review on Replacement of MR-J2S-30 kW or Higher Capacity Models with MR-J4-DU_"
"Part 6: Review on Replacement of MR-J2M with MR-J4" and
"Part 8: Review on Replacement of Motor" in this document.

↓

Peripheral equipment check

・・・Check the peripheral equipment that comes with the replacement.
: Refer to "Part 9: Review on Replacement of Optional Peripheral Equipment" in this document.

↓

Startup procedure check

・・・Check the startup procedure.
: Refer to "Part 10: Startup Procedure Manual" in this document.

The following displays the review items when replacing MR-J2S series with MR-J4 series using MR-J2S-60A as an example case.

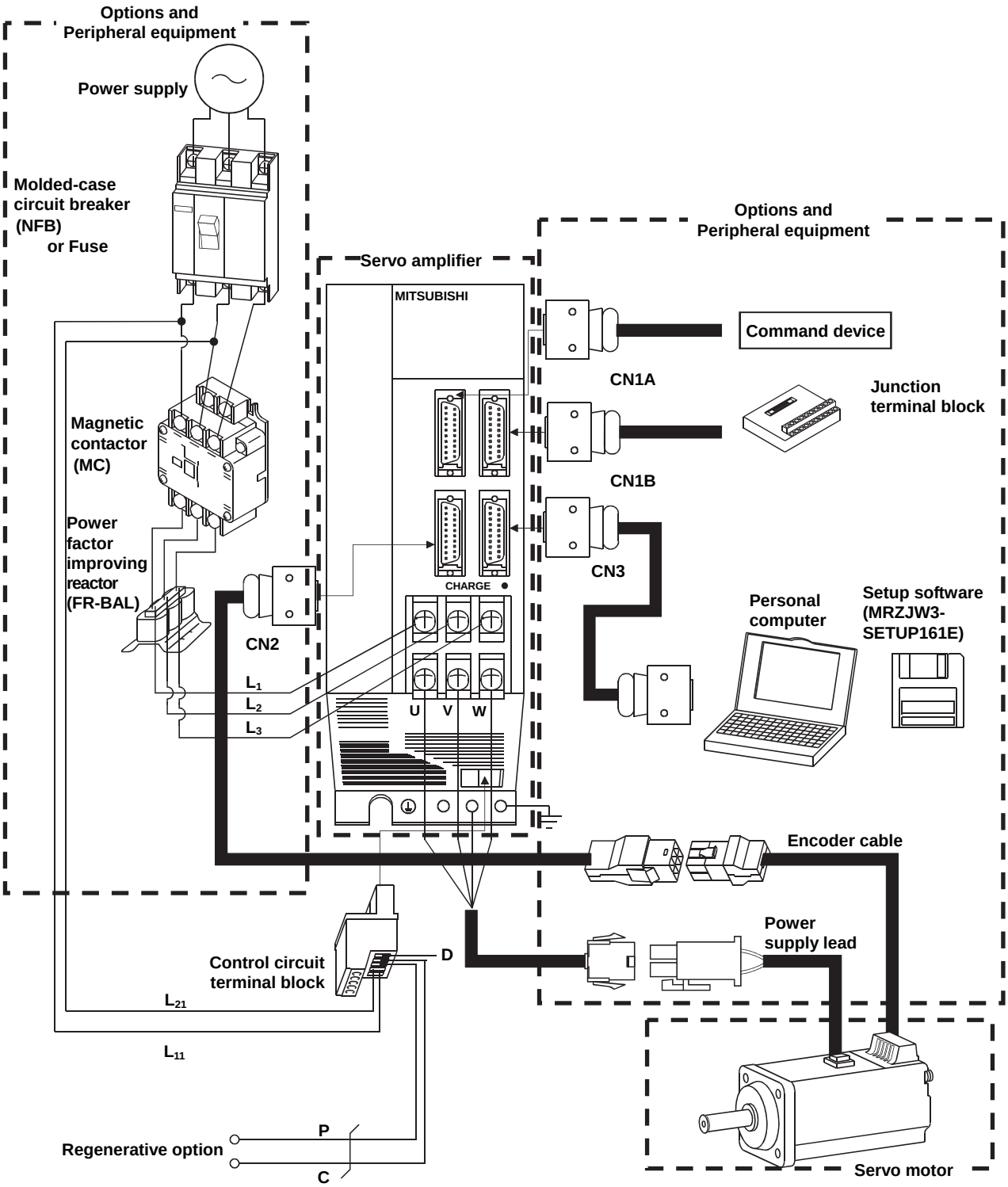

Changes from MR-J2S series to MR-J4 series

POINT

●The following table summarizes the changes from MR-J2S series to MR-J4 series.
For details, refer to the reference document/items.

Changes	Check items	Impact	Reference document/items
Servo amplifier	Connector	Connector shape, pin arrangement, signal abbreviation, and location are different.	Part 2, Section 3.4 Part 3, Section 3.5 Part 6, Section 3.3 Part 7, Section 1.2.2
	Terminal block	Terminal block shape, location, and method of drawing out wires are different.	Part 7, Section 1.2.1
	P3, P4 terminals	MR-J4 servo amplifier has P3 and P4 in the upstream of the inrush current suppression circuit. Note that the locations of the P1 and P terminals of MR-J2S-11K_ to MR-J2S-22K_ are different.	Part 7, Section 1.2.1
	Z-phase	Pulse width and start-up timing of the encoder Z phase pulse signal (OP) output from the servo amplifier are different.	Part 7, Section 1.2.9
	Parameter	Parameter numbers and contents are different. In addition, using the parameter converter function of MR Configurator2, GX Works2, and MT Developer2, it is possible to transfer the setup contents of the MR-J2S parameters to MR-J4.	Part 2, Section 3.6 Part 3, Section 3.7 Part 4, Section 3.6 Part 5, Chapter 3 Part 6, Section 3.5 Part 7, Section 2.3
	Dimensions	The height and width of the MR-J4 is equal to or less than that of the MR-J2S series. Check regarding room for wiring. (Note that the depth is larger for 400/600 W.)	Part 7, Chapter 2
	Interface 24 V DC power supply	For MR-J4, an external 24 V DC power supply is required for the interface.	Part 7, Section 1.2.5
	Dynamic brake coasting distance	The servo motor has a different dynamic brake coasting distance.	Part 7, Section 1.2.3
	Communication function	MR-J4 has no RS-232C. MR-J4 has the following communication functions. MR-J4-_A_: USB, RS-422 MR-J4-_B_: USB	Part 7, Section 1.2.7
	Forced stop deceleration	When MR-J4 is forcibly stopped in a factory setting and when an alarm occurs, the servo motor decelerates and stops. The way the servo motor stops is different from when the MR-J2S emergency stop or forced stop is effective.	Part 7, Section 1.2.4 MR-J4-_A_Servo Amplifier Instruction Manual MR-J4-_B_Servo Amplifier Instruction Manual
	Initializing time	The time it takes to reach servo-on from power-on is different.	Part 7, Section 1.2.8
	LED display	MR-J2S-_B_ has a 7-segment 2-digit LED display and MR-J4-_B_ has a 7-segment 3-digit display.	MR-J4-_B_Servo Amplifier Instruction Manual
	Built-in regenerative resistor	Note that replacing MR-J2S-60_4 and MR-J2S-100_4 with MR-J4-60_4 and MR-J4-100_4 respectively changes the regenerative ability.	Part 9, Section 1.1
Options and peripheral equipment	Molded-case circuit breaker fuse	Those for MR-J2S may not be usable. Select those for MR-J4.	Part 9, Section 4.3
	Magnetic contactor	Those for MR-J2S may not be usable. Select those for MR-J4.	Part 9, Section 4.3
	Power factor improving AC reactor	Those for MR-J2S may not be usable. FR-HAL is recommended.	Part 9, Section 7.1 Part 9, Section 7.3 Part 9, Section 7.6 Part 9, Section 7.8
	Power factor improving DC reactor	Those for MR-J2S may not be usable. FR-HEL is recommended.	Part 9, Section 7.2 Part 9, Section 7.4 Part 9, Section 7.5 Part 9, Section 7.7

Changes	Check items	Impact	Reference document/items
Options and peripheral equipment	Regenerative option	Some regenerative options cannot be used for MR-J4.	Part 9, Chapter 1
	Setup software (SETUP161E)	Setup software (SETUP161E) cannot be used for MR-J4. Use MR Configurator2.	Part 9, Chapter 8
	Battery	Use MR-BAT6V1SET for MR-J4.	Part 7, Chapter 3 Part 9, Chapter 5
	Encoder cable	Replace the encoder cable because the shape of the CN2 connector is different. (Note 1)	Part 7, Section 1.2.2 Part 9, Chapter 3
	Wire	An HIV wire is recommended for MR-J4. Therefore, when HIV wires are not used for those already laid, use the renewal tool.	Part 9, Chapter 4
	Dynamic brakes	Some dynamic brakes cannot be used for MR-J4.	Part 9, Chapter 2
	EMC filter	The recommended EMC filter is different.	Part 9, Chapter 6
	Panel through attachment	The panel through attachment cannot be used for MR-J4.	Part 7, Chapter 2
Servo motor	Mounting compatibility	Some models have no mounting compatibility.	Part 8, Section 1.1
	Oil seal	Although HC-SFS, HC-UFS and HA-LFS series have an oil seal, substitute models do not come with an oil seal. Use models having an oil seal when necessary.	Part 8, Section 1.1
	Dimensions	The total length may differ depending on models.	Part 8, Section 2.1 Part 8, Section 2.2 Part 8, Section 2.3
	Reducer	The HG motor has no G2-type reducer for high precision applications. The reducer efficiency differs between G2-type and G7-type. In addition, the actual reduction ratio of HC-KFS and HC-MFS series G1 types may differ from that of HG-KR series G1 types depending on models.	Part 8, Section 2.3 Part 8, Section 2.4
	Moment of inertia	The moment of inertia of the HC-_FS/HA-_FS motor may differ from that of the HG motor depending on models. (Note 2)	Part 8, Section 2.5
	Load to motor inertia ratio	The range of the load to motor inertia ratio for the servo motor may differ between the HC-_FS/HA-_FS motor and the HG motor depending on models.	Part 8, Section 2.5
	Connector	The power connector, encoder connector, and electromagnetic brake connector may differ from one another in shape.	Part 8, Section 2.6
	Torque characteristics	The torque characteristics of the HC-_FS/HA-_FS motor may differ from those of the HG motor.	Part 8, Section 2.7
	Rated speed/maximum speed	The Rated speed/maximum speed of the HC-_FS/HA-_FS motor may differ from those of the HG motor.	Servo Motor Instruction Manual (Vol. 3)
	Thermal sensor	For HG-JR 1000 r/min series of 15 kW or more and HG-JR 1500 r/min series of 22 kW or more, the thermal sensor is replaced with a thermistor. For HG-JR 1000 r/min series of 12 kW or less and HG-JR 1500 r/min series of 15 kW or less, the thermal sensor is removed.	Servo Motor Instruction Manual (Vol. 3)
	Encoder resolution	The encoder resolution differs as follows. HC-_FS/HA-_FS motor: 131,072 pulses/rev HG motor: 4,194,304 pulses/rev	Servo Motor Instruction Manual (Vol. 3)
Controller (SSCNET interface only)		The SSCNET positioning module and motion controller need to be replaced with the SSCNET III/H positioning module and motion controller. When using an existing controller, refer to "[Appendix 1] MR-J4-_B_-RJ020+MR-J4-T20".	Replacement Manual for replacing the A17nSHCPUN/A173UHCPU series with the Q series

Note 1. Use the renewal tool if using an existing encoder cable (including options).
(Refer to "[Appendix 2] Introduction to Renewal Tool".)
For HA-LFS 1000 r/min series of 15 kW or more, HA-LFS 1500 r/min series of 22 kW or more, and HA-LFS 2000 r/min series of 30 kW or more, their substitute models have different thermal wiring from them. A new encoder cable is required when using the substitutes.

2. This may change the motor inertia, making it necessary to adjust the servo gain.

3.3 Review on Replacement

3.3.1 Checking the system prior to replacement

Check the components of the system prior to replacement.

Category	Controller model	Servo amplifier model		"Reference items" in this document	Remarks
Positioning module	QD75P(D)	MR-J2S-_A_ MR-J2M-_A_	⇒	(1) MR-J2S series "Part 2: Review on Replacement of MR-J2S-_A_ with MR-J4-_A_" (2) MR-J2M series "Part 6: Review on Replacement of MR-J2M with MR-J4"	Positioning control
	A1SD75P(D)				
Controller from another company	Controller from another company	MR-J2S-_A_ MR-J2M-_A_	⇒		
No controller connected	No controller	MR-J2S-_A_ MR-J2M-_A_	⇒		Speed, torque limit
SSCNET Positioning module	QD75M	MR-J2S-_B_ MR-J2M-_B_	⇒	(1) MR-J2S series "Part 3: Review on Replacement of MR-J2S-_B_ with MR-J4-_B_" (2) MR-J2M series "Part 6: Review on Replacement of MR-J2M with MR-J4"	Positioning control
	A1SD75M				
SSCNET Motion controller	Q17_CPUN	MR-J2S-_B_ MR-J2M-_B_			
	A17_SHCPU		⇒		
	A273UHCPU				
Built-in positioning function		MR-J2S-_CP_	⇒	(1) MR-J2S series "Part 4: Replacement of MR-J2S-_CP_/CL_ with MR-J4-_A_"	Built-in positioning function
Built-in program operation function		MR-J2S-_CL_	⇒		Built-in program operation function

3.3.2 Determination of base replacement model

(1) Models for replacement between MR-J2S series and MR-J4 series
The models for replacement of both the servo amplifier and servo motor as a set are shown.

Series	Model	Replacement model (example)	Mounting compatibility (○: Compatible)	Note
200 V AC General-purpose interface	MR-J2S-10A	MR-J4-10A	○	Refer to "Part 7: Common Reference Material".
	MR-J2S-20A	MR-J4-20A	○	
	MR-J2S-40A	MR-J4-40A	○	
	MR-J2S-60A	MR-J4-60A	○	
	MR-J2S-70A	MR-J4-70A	○	
	MR-J2S-100A	MR-J4-100A	○	
	MR-J2S-200A	MR-J4-200A	(Note 1)	
	MR-J2S-350A	MR-J4-350A	(Note 1)	
	MR-J2S-500A	MR-J4-500A	(Note 1)	
	MR-J2S-700A	MR-J4-700A	(Note 1)	
	MR-J2S-11KA	MR-J4-11KA	(Note 1)	
	MR-J2S-15KA	MR-J4-15KA	(Note 1)	
	MR-J2S-22KA	MR-J4-22KA	(Note 1)	
	MR-J2S-30KA +MR-HP30KA	MR-J4-DU30KA +MR-CR55K	(Note 2)	
	MR-J2S-37KA +MR-HP30KA	MR-J4-DU37KA +MR-CR55K	(Note 2)	
200 V AC SSCNET interface	MR-J2S-10B	MR-J4-10B	○	
	MR-J2S-20B	MR-J4-20B	○	
	MR-J2S-40B	MR-J4-40B	○	
	MR-J2S-60B	MR-J4-60B	○	
	MR-J2S-70B	MR-J4-70B	○	
	MR-J2S-100B	MR-J4-100B	○	
	MR-J2S-200B	MR-J4-200B	(Note 1)	
	MR-J2S-350B	MR-J4-350B	(Note 1)	
	MR-J2S-500B	MR-J4-500B	(Note 1)	
	MR-J2S-700B	MR-J4-700B	(Note 1)	
	MR-J2S-11KB	MR-J4-11KB	(Note 1)	
	MR-J2S-15KB	MR-J4-15KB	(Note 1)	
	MR-J2S-22KB	MR-J4-22KB	(Note 1)	
	MR-J2S-30KB +MR-HP30KA	MR-J4-DU30KB +MR-CR55K	(Note 2)	
	MR-J2S-37KB +MR-HP30KA	MR-J4-DU37KB +MR-CR55K	(Note 2)	

Note 1. These replacement models do not have compatibility in mounting. Use the mounting plate holes of Renewal Tool manufactured by Mitsubishi Electric System & Service Co., Ltd. The servo amplifier capacity may vary depending on the servo motor to be replaced. Refer to Part 8 Section 1.1.
2. These replacement models do not have compatibility in mounting. Use the mounting plate holes of the mounting plate manufactured by Mitsubishi Electric System & Service Co., Ltd. The servo amplifier capacity may vary depending on the servo motor to be replaced. Refer to Part 8 Section 1.1.

Series	Model	Replacement model (example)	Mounting compatibility (○: Compatible)	Note
400 V AC General-purpose interface	MR-J2S-60A4	MR-J4-60A4	(Note)	Refer to "Part 7: Common Reference Material".
	MR-J2S-100A4	MR-J4-100A4	(Note)	
	MR-J2S-200A4	MR-J4-200A4	(Note)	
	MR-J2S-350A4	MR-J4-350A4	(Note)	
	MR-J2S-500A4	MR-J4-500A4	○	
	MR-J2S-700A4	MR-J4-700A4	(Note)	
	MR-J2S-11KA4	MR-J4-11KA4	(Note)	
	MR-J2S-15KA4	MR-J4-15KA4	(Note)	
	MR-J2S-22KA4	MR-J4-22KA4	(Note)	
	MR-J2S-30KA4 +MR-HP55KA4	MR-J4-DU30KA4 +MR-CR55K4	(Note)	
	MR-J2S-37KA4 +MR-HP55KA4	MR-J4-DU37KA4 +MR-CR55K4	(Note)	
	MR-J2S-45KA4 +MR-HP55KA4	MR-J4-DU45KA4 +MR-CR55K4	(Note)	
	MR-J2S-55KA4 +MR-HP55KA4	MR-J4-DU55KA4 +MR-CR55K4	(Note)	
400 V AC SSCNET interface	MR-J2S-60B4	MR-J4-60B4	(Note)	
	MR-J2S-100B4	MR-J4-100B4	(Note)	
	MR-J2S-200B4	MR-J4-200B4	(Note)	
	MR-J2S-350B4	MR-J4-350B4	(Note)	
	MR-J2S-500B4	MR-J4-500B4	○	
	MR-J2S-700B4	MR-J4-700B4	(Note)	
	MR-J2S-11KB4	MR-J4-11KB4	(Note)	
	MR-J2S-15KB4	MR-J4-15KB4	(Note)	
	MR-J2S-22KB4	MR-J4-22KB4	(Note)	
	MR-J2S-30KB4 +MR-HP55KA4	MR-J4-DU30KB4 +MR-CR55K4	(Note)	
	MR-J2S-37KB4 +MR-HP55KA4	MR-J4-DU37KB4 +MR-CR55K4	(Note)	
	MR-J2S-45KB4 +MR-HP55KA4	MR-J4-DU45KB4 +MR-CR55K4	(Note)	
	MR-J2S-55KB4 +MR-HP55KA4	MR-J4-DU55KB4 +MR-CR55K4	(Note)	
100 V AC General-purpose interface	MR-J2S-10A1	MR-J4-10A1	○	
	MR-J2S-20A1	MR-J4-20A1	○	
	MR-J2S-40A1	MR-J4-40A1	○	
100 V AC SSCNET interface	MR-J2S-10B1	MR-J4-10B1	○	
	MR-J2S-20B1	MR-J4-20B1	○	
	MR-J2S-40B1	MR-J4-40B1	○	

Note. These replacement models do not have compatibility in mounting. Use the mounting plate holes of the mounting plate manufactured by Mitsubishi Electric System & Service Co., Ltd. The servo amplifier capacity may vary depending on the servo motor to be replaced. Refer to Part 8 Section 1.1.

Series	Model	Replacement model (example)	Mounting compatibility (○: Compatible)	Note
200 V AC Built-in positioning function	MR-J2S-10CP	MR-J4-10A-RJ (Note 3)	○	Refer to "Part 7: Common Reference Material".
	MR-J2S-20CP	MR-J4-20A-RJ (Note 3)	○	
	MR-J2S-40CP	MR-J4-40A-RJ (Note 3)	○	
	MR-J2S-60CP	MR-J4-60A-RJ (Note 3)	○	
	MR-J2S-70CP	MR-J4-70A-RJ (Note 3)	○	
	MR-J2S-100CP	MR-J4-100A-RJ (Note 3)	○	
	MR-J2S-200CP	MR-J4-200A-RJ (Note 3)	(Note 1)	
	MR-J2S-350CP	MR-J4-350A-RJ (Note 3)	(Note 1)	
	MR-J2S-500CP	MR-J4-500A-RJ (Note 3)	(Note 1)	
	MR-J2S-700CP	MR-J4-700A-RJ (Note 3)	(Note 1)	
100 V AC Built-in positioning function	MR-J2S-10CP1	MR-J4-10A1-RJ (Note 3)	○	
	MR-J2S-20CP1	MR-J4-20A1-RJ (Note 3)	○	
	MR-J2S-40CP1	MR-J4-40A1-RJ (Note 3)	○	
200 V AC Built-in program operation function	MR-J2S-10CL	MR-J4-10A-RJ (Note 3)	○	
	MR-J2S-20CL	MR-J4-20A-RJ (Note 3)	○	
	MR-J2S-40CL	MR-J4-40A-RJ (Note 3)	○	
	MR-J2S-60CL	MR-J4-60A-RJ (Note 3)	○	
	MR-J2S-70CL	MR-J4-70A-RJ (Note 3)	○	
	MR-J2S-100CL	MR-J4-100A-RJ (Note 3)	○	
	MR-J2S-200CL	MR-J4-200A-RJ (Note 3)	(Note 2)	
	MR-J2S-350CL	MR-J4-350A-RJ (Note 3)	(Note 2)	
	MR-J2S-500CL	MR-J4-500A-RJ (Note 3)	(Note 2)	
	MR-J2S-700CL	MR-J4-700A-RJ (Note 3)	(Note 2)	
100 V AC Built-in program operation function	MR-J2S-10CL1	MR-J4-10A1-RJ (Note 3)	○	
	MR-J2S-20CL1	MR-J4-20A1-RJ (Note 3)	○	
	MR-J2S-40CL1	MR-J4-40A1-RJ (Note 3)	○	

Note 1. These replacement models do not have compatibility in mounting. Use the mounting plate holes of Renewal Tool manufactured by Mitsubishi Electric System & Service Co., Ltd. The servo amplifier capacity may vary depending on the servo motor to be replaced. Refer to Part 8 Section 1.1.

2. These replacement models do not have compatibility in mounting. Use the mounting plate holes of the mounting plate manufactured by Mitsubishi Electric System & Service Co., Ltd. The servo amplifier capacity may vary depending on the servo motor to be replaced. Refer to Part 8 Section 1.1.

3. Software version B3 or later.

(2) Models for replacement between MR-J2M series and MR-J4 series

The models for replacement of both the servo amplifier and servo motor as a set are shown.

Series	Model			Replacement model (example)	Mounting compatibility (○: Compatible)	Note
	Base unit	Interface unit	Drive Unit			
200 V AC General-purpose interface	MR-J2M-BU_	MR-J2M-P8A	MR-J2M-10DU	MR-J4-10A	(Note)	Refer to "Part 7: Common Reference Material".
			MR-J2M-20DU	MR-J4-20A	(Note)	
			MR-J2M-40DU	MR-J4-40A	(Note)	
			MR-J2M-70DU	MR-J4-70A	(Note)	
200 V AC SSCNET interface	MR-J2M-BU_	MR-J2M-P8B	MR-J2M-10DU	MR-J4-10B	(Note)	
			MR-J2M-20DU	MR-J4-20B	(Note)	
			MR-J2M-40DU	MR-J4-40B	(Note)	
			MR-J2M-70DU	MR-J4-70B	(Note)	

Note. Refer to "Part 7: Common Reference Material" for the mounting hole dimensions.

(3) Servo amplifier and servo motor combination for the MR-J4 series
Refer to "Part 8: Review on Replacement of Motor" when replacing the servo motor with the one that has already been installed.
(Refer to "[Appendix 2] Introduction to Renewal Tool" if using an existing cable and servo motor.)

(a) 100 V/200 V class

Servo amplifier	Rotary servo motor					
	HG-KR	HG-MR	HG-SR	HG-UR	HG-RR	HG-JR
MR-J4-10_(1)	053 13	053 13				
MR-J4-20_(1)	23	23				
MR-J4-40_(1)	43	43				
MR-J4-60_			51 52			53
MR-J4-70_	73	73		72		73
MR-J4-100_			81 102			103
MR-J4-200_			121, 201 152, 202	152	103 153	153 203
MR-J4-350_			301 352	202	203	353
MR-J4-500_			421 502	352 502	353 503	503
MR-J4-700_			702			703
MR-J4-11K_						903 11K1M
MR-J4-15K_						15K1M
MR-J4-22K_						22K1M
MR-J4-DU30K_						30K1 30K1M
MR-J4-DU37K_						37K1 37K1M

(b) 400 V class

Servo amplifier	Rotary servo motor	
	HG-SR	HG-JR
MR-J4-60_4	524	534
MR-J4-100_4	1024	734, 1034
MR-J4-200_4	1524, 2024	1534, 2034
MR-J4-350_4	3524	3534
MR-J4-500_4	5024	5034
MR-J4-700_4	7024	7034
MR-J4-11K_4		9034, 11K1M4
MR-J4-15K_4		15K1M4
MR-J4-22K_4		22K1M4
MR-J4-DU30K_4		30K14 30K1M4
MR-J4-DU37K_4		37K14 37K1M4
MR-J4-DU45K_4		45K1M4
MR-J4-DU55K_4		55K1M4

3.3.3 Mounting compatibility check

Refer to "Part 7: Common Reference Material" and "Part 8: Review on Replacement of Motor".

3.3.4 Detailed review on replacement model

Refer to "Part 2: Review on Replacement of MR-J2S-_A_ with MR-J4-_A_", "Part 3: Review on Replacement of MR-J2S-_B_ with MR-J4-_B_",
"Part 4: Replacement of MR-J2S-_CP_/CL_ with MR-J4-_A_RJ", "Part 5: Replacement of MR-J2S-_DU_ with MR-J4-_DU_", and "Part 6: Review on Replacement of MR-J2M with MR-J4".

3.3.5 Peripheral equipment check

Refer to "Part 9: Review on Replacement of Optional Peripheral Equipment" in this document.

3.3.6 Startup procedure check

Refer to "Part 10: Startup Procedure Manual" in this document.

4. RELATED MATERIALS

4.1 Catalog

(1) Mitsubishi Electric General-Purpose AC Servo MELSERVO-J4

(2) Motion Controller Q17nDSCPU/Q170MSCPU
Simple Motion Module QD77MS/QD77GF

4.2 Instruction Manual

(1) MELSERVO-J4 Series MR-J4-_A(-RJ)/MR-J4-_A4(-RJ)/MR-J4-_A1(-RJ) Servo Amplifier Instruction Manual

(2) MELSERVO-J4 Series MR-J4-_B(-RJ)/MR-J4-_B4(-RJ)/MR-J4-_B1(-RJ) Servo Amplifier Instruction Manual

(3) HG-MR/HG-KR/HG-SR/HG-JR/HG-RR/HG-UR Servo Motor Instruction Manual (Vol.3)

(4) Conversion Unit for SSCNET of MR-J2S-B Compatible AC Servo MR-J4-_B-RJ020/MR-J4-_B4-RJ020/MR-J4-_B1-RJ020/MR-J4-T20 Servo Amplifier Instruction Manual

(5) MELSERVO-J4 Series MR-J4-_A(-RJ)/MR-J4-_A4(-RJ)/MR-J4-_A1(-RJ) Servo Amplifier Instruction Manual(POSITIONING MODE)

(6) MR-J4-DU-_(-RJ)/MR-J4-DU-_4(-RJ) Drive Unit MR-CR55K(4) Converter Unit Instruction Manual

(7) MELSERVO-J4 Servo Amplifier Instruction Manual (Troubleshooting Edition)

(8) Instructions and Cautions for Drive of HC/HA Series Servo Motor with MR-J4-_B_-RJ020 Servo Amplifier

4.3 Replacement Manual

(1) Replacement Manual for replacing the A17nSHCPUN/A173UHCPU series with the Q series

4.4 Renewal Tool

(1) MR-J2S-_A_ renewal tool

(2) MR-J2S-_B_ renewal tool

4.5 Replacement Tool for Replacing MR-J2S series with MR-J4 series

This tool is a reference for replacing the in-use MR-J2S series with the MR-J4 series.
When an in-use rotary servo motor or servo amplifier is selected, a corresponding MR-J4 series product can be selected.
Note: For details, contact your local sales office.

4.6 MITSUBISHI ELECTRIC FA Global Website

http://www.mitsubishielectric.com/fa/

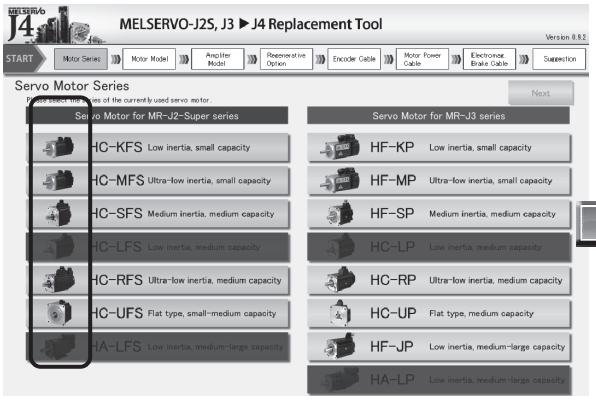

Servo motor series model, servo amplifier model, regenerative option, encoder motor power supply, and electromagnetic brake selection

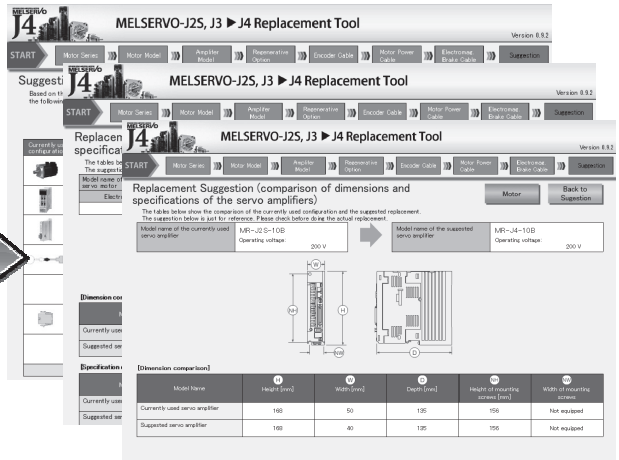

Selection result configuration, servo motor dimensions/specification comparison, servo amplifier dimensions/specification comparison

MEMO

Part 2
Review on Replacement of MR-J2S-_A_ with MR-J4-_A_

Part 2: Review on Replacement of MR-J2S-_A_ with MR-J4-_A_

1. SUMMARY

This section describes the changes to be made when a system using MR-J2S-_A_ is replaced with a system using MR-J4-_A_.

2. CASE STUDY ON REPLACEMENT OF MR-J2S-_A_

2.1 Review on Replacement Method

POINT
●An HG motor cannot be driven by MR-J2S-_A_. When a servo motor is replaced with an HG motor, servo amplifier also needs to be replaced with MR-J4-_A_ simultaneously.

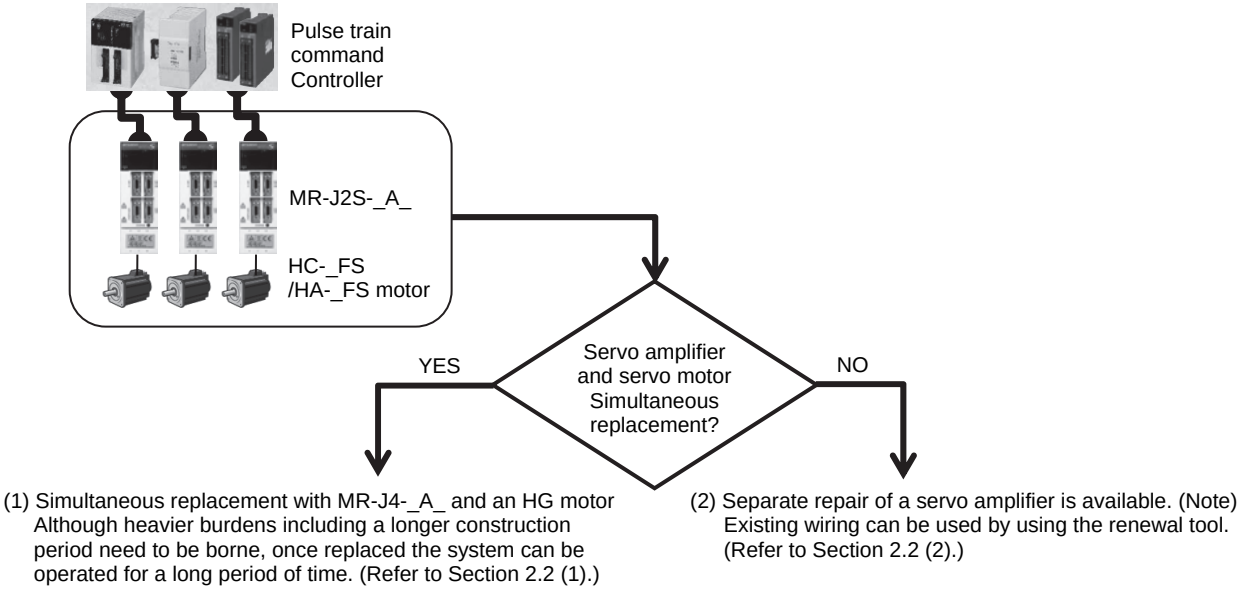

Note. Separate repair means replacement.

2.2 Replacement Method

(1) Simultaneous replacement with MR-J4-_A_ and an HG motor
The currently used connectors or cables need to be replaced. The parameters of the existing system can be transferred with the parameter converter function of MR Configurator2. (Refer to "Part 7: Common Reference Material".)

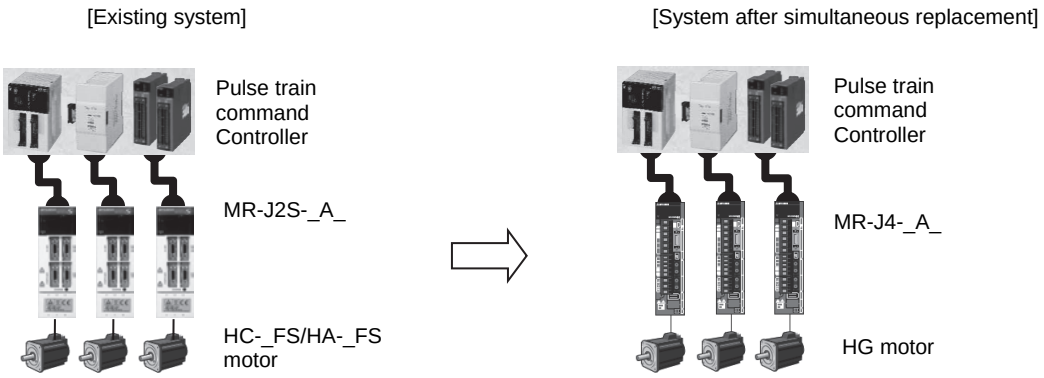

(2) Separate repair of servo amplifier/servo motor

POINT

●An HG motor cannot be driven by MR-J2S-_A_. When a servo motor is replaced with an HG motor, servo amplifier also needs to be replaced with MR-J4-_A_ simultaneously.

●When an "HC-_FS/HA-_FS motor" shown below is used, "simultaneous replacement with MR-J4-_A_ and an HG motor" is recommended. When an HG motor is adopted, the capacity of the servo amplifier needs to be changed. (Consider replacement, referring to "torque characteristics" described in "Part 8: Replacement of Motor".)

Existing device models		Replacement models for simultaneous replacement (example)	
Servo motor	Servo amplifier	Servo motor	Servo amplifier
HC-LFS52	MR-J2S-60A	HG-JR73	MR-J4-70A
HC-LFS102	MR-J2S-100A	HG-JR153	MR-J4-200A
HC-LFS152	MR-J2S-200A	HG-JR353	MR-J4-350A
HA-LFS15K2(4)(B)	MR-J2S-15KA(4)	HG-JR11K1M(4)(B)	MR-J4-11KA(4)
HA-LFS22K2(4)(B)	MR-J2S-22KA(4)	HG-JR15K1M(4)(B)	MR-J4-15KA(4)
HA-LFS30K2(4)	MR-J2S-30KA(4)	HG-JR22K1M(4)	MR-J4-22KA(4)
HA-LFS37K2(4)	MR-J2S-37KA(4)	HG-JR30K1M(4)	MR-J4-DU30KA(4)
HA-LFS45K24	MR-J2S-45KA4	HG-JR37K1M4	MR-J4-DU37KA4
HA-LFS55K24	MR-J2S-55KA4	HG-JR45K1M4	MR-J4-DU45KA4
HC-KFS46	MR-J2S-70A	HG-KR43	MR-J4-40A
HC-KFS410	MR-J2S-70A	HG-KR43	MR-J4-40A
HC-RFS103(B)G2 1/_	MR-J2S-200A	HG-SR102(B)G7 1/_	MR-J4-100A
HC-RFS203(B)G2 1/_	MR-J2S-350A	HG-SR202(B)G7 1/_	MR-J4-200A
HC-RFS353(B)G2 1/_	MR-J2S-500A	HG-SR352(B)G7 1/_	MR-J4-350A
HC-RFS103(B)G5 1/_	MR-J2S-200A	HG-SR102(B)G5 1/_	MR-J4-100A
HC-RFS203(B)G5 1/_	MR-J2S-350A	HG-SR202(B)G5 1/_	MR-J4-200A
HC-RFS353(B)G5 1/_	MR-J2S-500A	HG-SR352(B)G5 1/_	MR-J4-350A
HC-RFS103(B)G7 1/_	MR-J2S-200A	HG-SR102(B)G7 1/_	MR-J4-100A
HC-RFS203(B)G7 1/_	MR-J2S-350A	HG-SR202(B)G7 1/_	MR-J4-200A
HC-RFS353(B)G7 1/_	MR-J2S-500A	HG-SR352(B)G7 1/_	MR-J4-350A

After replacement, an HC/HA motor can be driven by MR-J4-_A_. Refer to "Part 7: Common Reference Material" for target motors.
When an HC-_FS/HA-_FS motor is driven by MR-J4-_A_, it is necessary to set [Pr. PC22].
Refer to Part 7 Section 4.
Use the renewal tool when replacing a servo amplifier with MR-J4-_A_ without replacing the currently used servo motor and existing cables. (Refer to "[Appendix 2] Introduction to Renewal Tool".)
The parameters of the existing system can be transferred with the parameter converter function of MR Configurator2. (Refer to "Part 7: Common Reference Material".)

[Existing system]

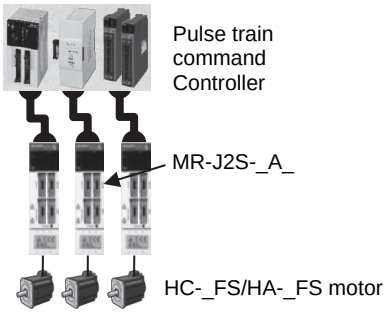

[System after servo amplifier has been repaired]

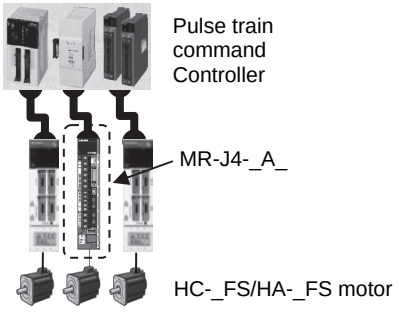

3. DIFFERENCES BETWEEN MR-J2S-_A_ AND MR-J4-_A_

3.1 Function Comparison Table

Item	MR-J2S-_A_ series	MR-J4-_A_	Compatibility	Reference material/items
Control mode	Position control mode (pulse command) Speed control mode (analog command) Torque control mode (analog command)	←	○	
Maximum input pulses	Open-collector pulse: 200 kpulses/s Differential pulse : 500 kpulses/s Command pulse: Sink	Open-collector pulse: 200 kpulses/s Differential pulse: 4 Mpulses/s Command pulse: Sink	Note 1	MR-J4-_A_ Servo Amplifier Instruction Manual, Section 3.6.1 (1)
The number of DIO points (excluding EM1)	DI: 8 points, DO: 6 points	DI: 9 points, DO: 6 points	○	MR-J4-_A_ Servo Amplifier Instruction Manual, Section 5.2.4 [Pr. PD03] to [Pr. PD28]
Encoder pulse output	ABZ-phase (differential line driver) Z-phase (open collector)	←	Note 2	MR-J4-_A_ Servo Amplifier Instruction Manual, Section 5.2.1 [Pr. PA15]
DIO interface	Input: Sink/source Output: Sink	Input: Sink/source Output: Sink/source	○	MR-J4-_A_ Servo Amplifier Instruction Manual, Section 3.9
Analog input/output	(Input) 2ch 10-bit torque, 14-bit speed or equivalent (Output) 10-bit or equivalent × 2 ch	←	○	MR-J4-_A_ Servo Amplifier Instruction Manual, Section 3.6
Number of internal speed commands	7	←	○	MR-J4-_A_ Servo Amplifier Instruction Manual, Section 3.6.2 (1) (b)
Parameter setting method	Push button Setup software (SETUP161E)	Push button MR Configurator2	○	MR-J4-_A_ Servo Amplifier Instruction Manual, Chapter 4
Button	4 buttons	←	○	MR-J4-_A_ Servo Amplifier Instruction Manual, Chapter 4
LED display	7-segment 5-digit	←	○	MR-J4-_A_ Servo Amplifier Instruction Manual, Chapter 4
Communication function	RS-422/RS-232C	RS-422/USB	○	MR-J4-_A_ Servo Amplifier Instruction Manual, Chapter 14
Command pulse logic setting	Forward/reverse rotation pulse train Signed pulse train A-phase/B-phase pulse train	←	○	Part 2, Section 3.7
Interface 24 V DC power supply	Installed.	Not installed.	×	Part 7, Section 1.2.5
Initializing time	1 to 2 s	2.5 to 3.5 s	×	Part 7, Section 1.2.8
Z-phase pulse width	At low speed: About 6 ms (Note 3) At high speed: About 440 μs	At low speed: About 6 ms (Note 3) At high speed: About 440 μs	×	Part 7, Section 1.2.9

Note 1. Depending on the servo motor being used, "Electronic gear" needs to be set.
2. The parameters need to be set due to output pulse settings.
3. This is the pulse width when the motor rotates at 10 r/min. The pulse width changes depending on rotational frequency.

3.2 Function List

function		MR-J2S-_A_	MR-J4-_A_	Reference document/items
Encoder resolution		131072 pulses/rev	4194304 pulses/rev	MR-J4-_A_ Servo Amplifier Instruction Manual, Section 1.3
Absolute position detection system		○ [Pr. 1]	○ [Pr. PA03]	MR-J4-_A_ Servo Amplifier Instruction Manual, Chapter 12
Gain switching function		○ [Pr. 65]	○ [Pr. PB26]	MR-J4-_A_ Servo Amplifier Instruction Manual, Section 7.2
Advanced vibration suppression control II		×	○	MR-J4-_A_ Servo Amplifier Instruction Manual, Section 7.1.5
Adaptive vibration suppression control		○ [Pr. 60]	× (Note)	
Adaptive filter II		×	○ [Pr. PB01]	MR-J4-_A_ Servo Amplifier Instruction Manual, Section 7.1.2
Low-pass filter		○ [Pr. 60]	○ [Pr. PB23]	MR-J4-_A_ Servo Amplifier Instruction Manual, Section 7.1.4
Machine analyzer function		○	○	
Machine simulation		○	×	
Gain search function		○	○ (One-touch tuning)	MR-J4-_A_ Servo Amplifier Instruction Manual, Section 6.2
Robust filter		×	○ [Pr. PE41]	
Slight vibration suppression control		○ [Pr. 20]	○ [Pr. PB24]	
Auto tuning		○ [Pr. 2]	○ [Pr. PB08]	MR-J4-_A_ Servo Amplifier Instruction Manual, Section 6.3
Brake unit		○	○	MR-J4-_A_ Servo Amplifier Instruction Manual, Section 11.3
Power regenerative converter		○	○	MR-J4-_A_ Servo Amplifier Instruction Manual, Section 11.4
Regenerative option		○ [Pr. 0]	○ [Pr. PA02]	MR-J4-_A_ Servo Amplifier Instruction Manual, Section 11.2
Torque limit		○ [Pr. 28, 76]	○ [Pr. PA11], [Pr. PA12], [Pr. PC35]	MR-J4-_A_ Servo Amplifier Instruction Manual, Section 3.6.1 (5)
Alarm history clear		○ [Pr. 16]	○ [Pr. PC18]	
Output signal selection (device settings)		○ [Pr. 49] (WNG, BWNG, and alarm code output only)	○ [Pr. PD23] to [Pr. PD28]	
Output signal (DO) forced output		○	○	MR-J4-_A_ Servo Amplifier Instruction Manual, Section 4.5.8
Test operation mode	JOG operation	○	○	MR-J4-_A_ Servo Amplifier Instruction Manual, Section 4.5.9
	Positioning operation	○ Requires the setup software (SETUP161E).	○ Requires the MR Configurator2.	
	Motor-less operation	○	○ [Pr. PC60]	
	Machine analyzer operation	○ Requires the setup software (SETUP161E).	○ Requires the MR Configurator2.	
Analog monitor output		○ [Pr. 17]	○ [Pr. PC14], [Pr. PC15]	MR-J4-_A_ Servo Amplifier Instruction Manual Appendix 8
Setup software		Setup software (SETUP161E) is available for free.	MR Configurator2	MR-J4-_A_ Servo Amplifier Instruction Manual, Section 11.7
Linear servo system		×	○	MR-J4-_A_ Servo Amplifier Instruction Manual, Chapter 15
Direct drive servo system		×	○	MR-J4-_A_ Servo Amplifier Instruction Manual, Chapter 16
Fully closed loop system		×	○	MR-J4-_A_ Servo Amplifier Instruction Manual, Chapter 17
STO function		×	○	MR-J4-_A_ Servo Amplifier Instruction Manual, Chapter 13

Note. This function is provided by advanced vibration suppression control II.

3.3 Comparison of Standard Connection Diagrams

(1) Position control mode

MR-J2S-_A_	MR-J4-_A_
Example of connection to A1SD75P_ 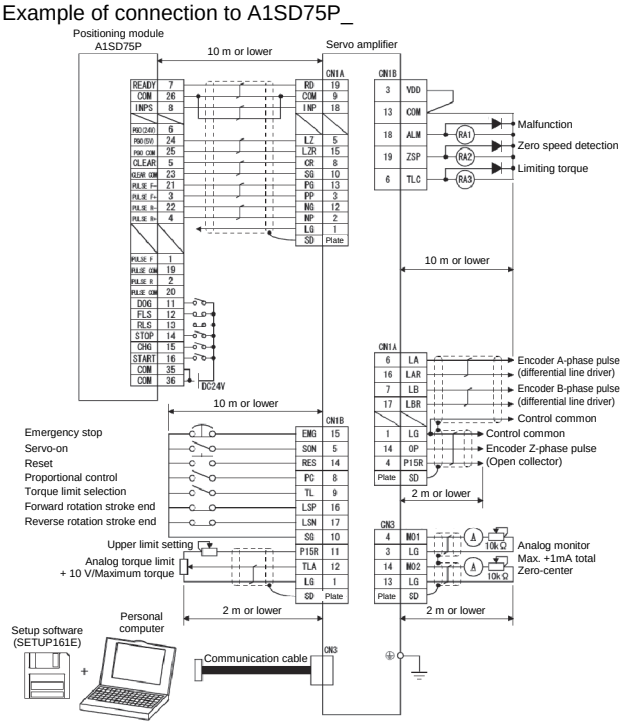 For 11 kW to 22 kW, the connector for the analog monitor is CN4. (Refer to Section 3.4 (2) (c).)	Example of connection to QD75D 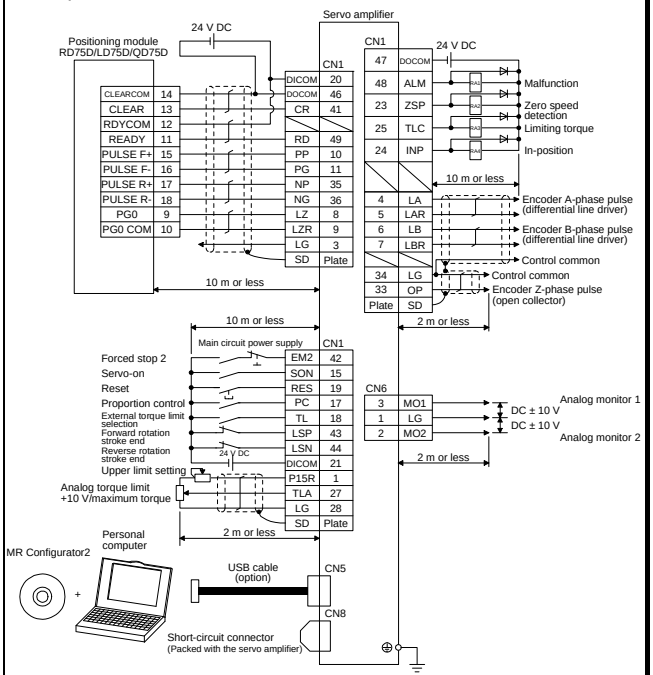

(2) Speed control mode

MR-J2S-_A_	MR-J4-_A_
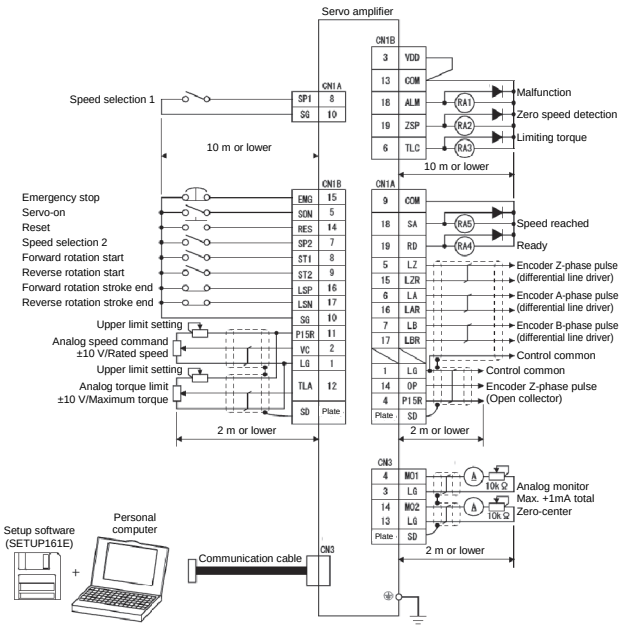 For 11 kW to 22 kW, the connector for the analog monitor is CN4. (Refer to Section 3.4 (2) (c).)	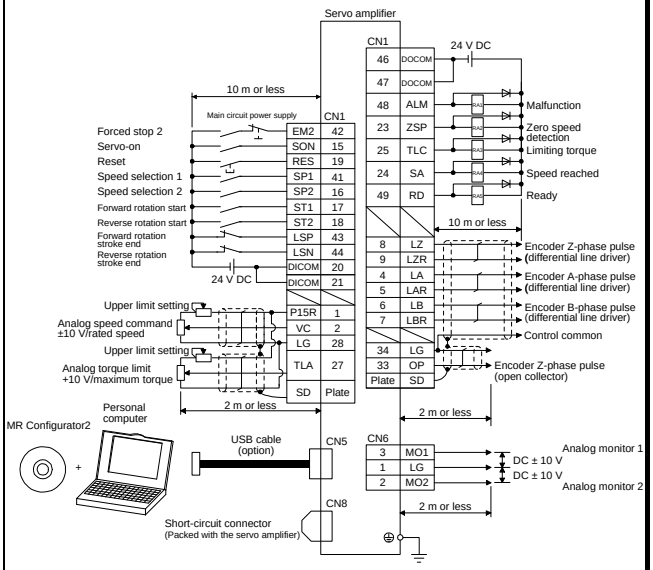

(3) Torque control mode

MR-J2S-_A_	MR-J4-_A_
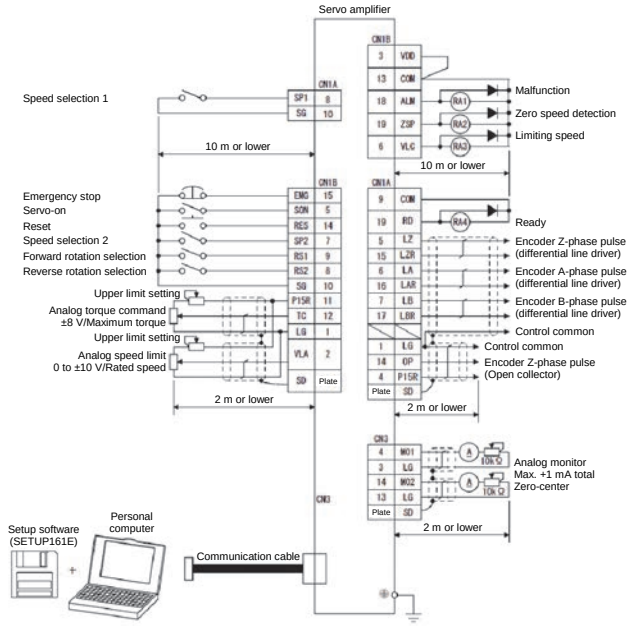	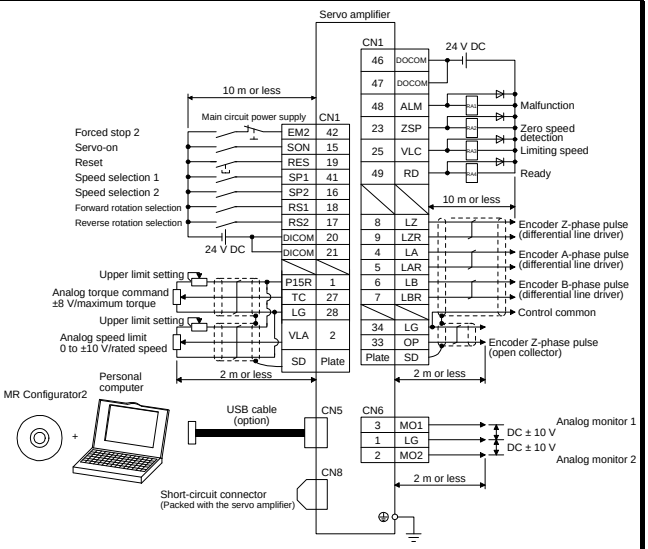
For 11 kW to 22 kW, the connector for the analog monitor is CN4. (Refer to Section 3.4 (2) (c).)	

3.4 List of Corresponding Connectors and Terminal Blocks

(1) Connector comparison table

An example of connections with the peripheral equipment is shown below. For details on signals, refer to each servo amplifier instruction manual.

MR-J2S-_A_	MR-J4-_A_
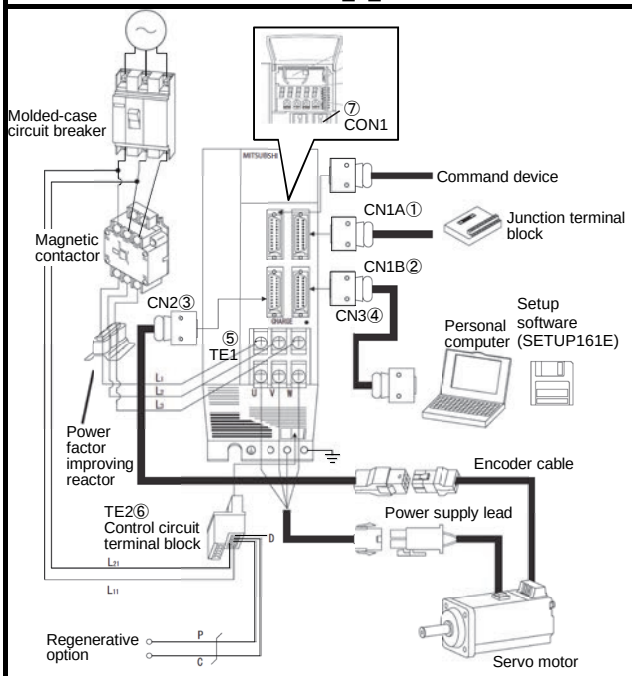	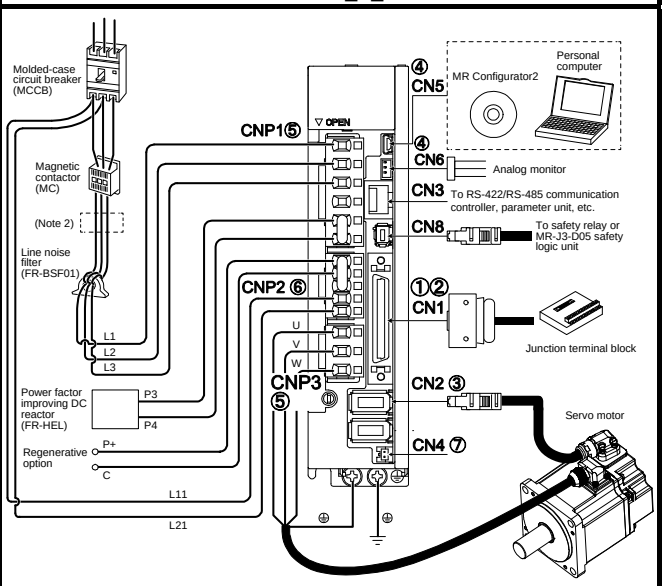
Note 1. The diagram shows an example of MR-J2S-100A or less.	Note 1. The diagram shows an example of MR-J4-100A or less. 2. The power factor improving AC reactor can also be used. In this case, the power factor improving DC reactor cannot be used.

(2) List of connector and terminal block correspondence

	MR-J2S-_A_			MR-J4-_A_	Note
(1)	I/O signal connector [CN1A]			I/O signal connector [CN1]	Prepare a new cable.
(2)	I/O signal connector [CN1B]				
(3)	Encoder connector [CN2]			Encoder connector [CN2]	Must switch to encoder cable (option) or prepare a new cable.
(4)	Communication connector [CN3]	PC connection	→	USB communication connector [CN5]	Switch to USB cable (option).
		Analog monitor		Analog monitor connector [CN6]	Switch to monitor cable (option).
(5)	Main circuit terminal block [TE1]	Input power supply		Main circuit power connector [CNP1]	Switch to the power connector (enclosed with the amplifier).
		Servo motor power supply		Servo motor power connector [CNP3]	
(6)	Control circuit terminal block [TE2]			Control circuit power connector [CNP2]	
(7)	Battery connector [CON1]			Battery connector [CN4]	Prepare a new battery.

When not using the STO function in MR-J4-_A_, attach the short-circuit connector supplied with the servo amplifier to CN8 (STO input signal connector).

The configuration of the main circuit terminal block differs depending on the capacity. Refer to "Part 7: Common Reference Material".

(3) Comparison of signals

(a) CN1A/CN1B

1) Position control mode

MR-J2S-_A_		Signal abbreviation (Note)	MR-J4-_A_	
Connector pin assignment	Connector pin No.		Connector pin No.	Connector pin assignment
CN1A 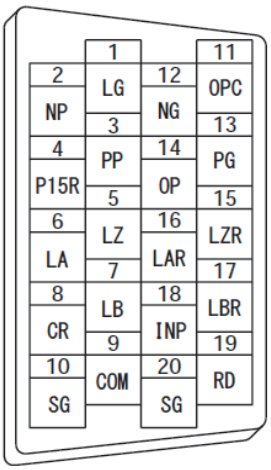 	CN1A-1	LG	CN1-3 CN1-28	CN1 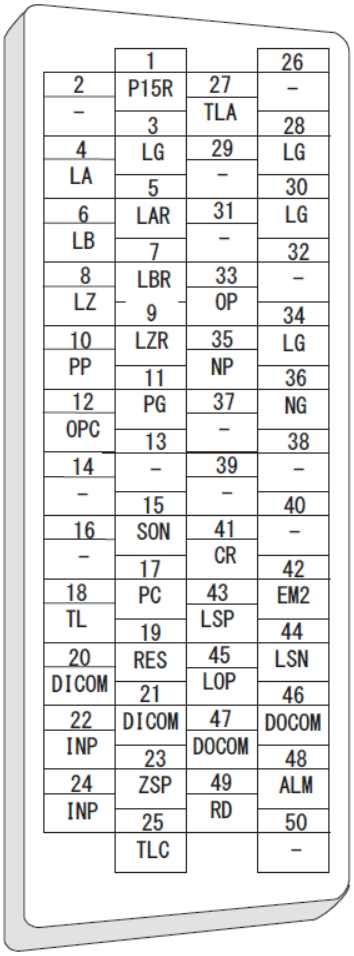
	CN1A-2	NP	CN1-35	
	CN1A-3	PP	CN1-10	
	CN1A-4	P15R	CN1-1	
	CN1A-5	LZ	CN1-8	
	CN1A-6	LA	CN1-4	
	CN1A-7	LB	CN1-6	
	CN1A-8	CR	CN1-41	
	CN1A-9	COM (DICOM)	CN1-20	
	CN1A-10	SG (DOCOM)	CN1-46	
	CN1A-11	OPC	CN1-12	
	CN1A-12	NG	CN1-36	
	CN1A-13	PG	CN1-11	
	CN1A-14	OP	CN1-33	
	CN1A-15	LZR	CN1-9	
	CN1A-16	LAR	CN1-5	
	CN1A-17	LBR	CN1-7	
	CN1A-18	INP	CN1-24	
	CN1A-19	RD	CN1-49	
	CN1A-20	SG (DOCOM)	CN1-47	
CN1B 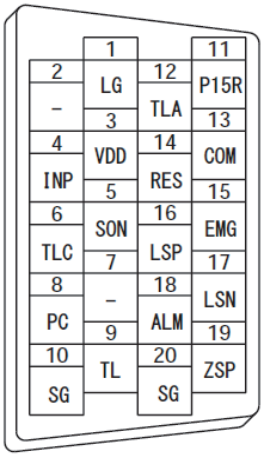 	CN1B-1	LG	CN1-30 CN1-34	
	CN1B-2	-	-	
	CN1B-3	VDD	-	
	CN1B-4	INP	CN1-22	
	CN1B-5	SON	CN1-15	
	CN1B-6	TLC	CN1-25	
	CN1B-7	-	CN1-16	
	CN1B-8	PC	CN1-17	
	CN1B-9	TL	CN1-18	
	CN1B-10	SG (DOCOM)	CN1-46	
	CN1B-11	P15R	CN1-1	
	CN1B-12	TLA	CN1-27	
	CN1B-13	COM (DICOM)	CN1-21	
	CN1B-14	RES	CN1-19	
	CN1B-15	EMG (EM2)	CN1-42	
	CN1B-16	LSP	CN1-43	
	CN1B-17	LSN	CN1-44	
	CN1B-18	ALM	CN1-48	
	CN1B-19	ZSP	CN1-23	
	CN1B-20	SG (DOCOM)	CN1-47	

Note. Signal abbreviations in parentheses are for MR-J4-_A_.

2) Speed control mode

MR-J2S-_A_		Signal abbreviation (Note)	MR-J4-_A_	
Connector pin assignment	Connector pin No.		Connector pin No.	Connector pin assignment
CN1A 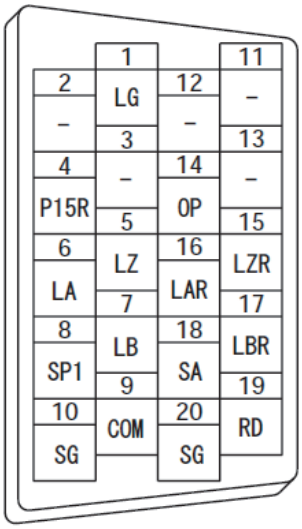	CN1A-1	LG	CN1-3 CN1-28	CN1 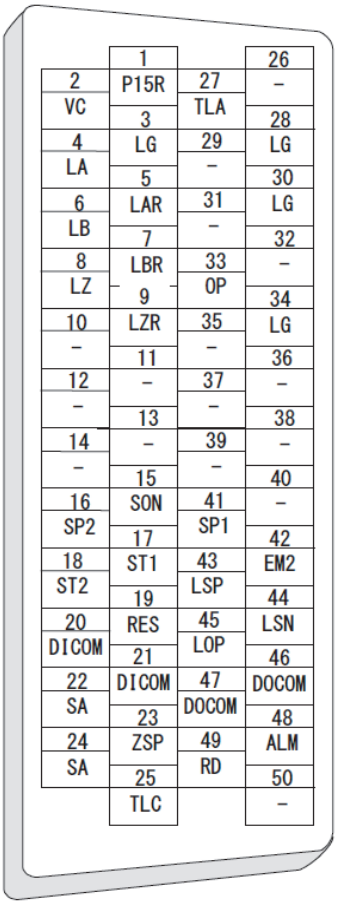
	CN1A-2	-	-	
	CN1A-3	-	-	
	CN1A-4	P15R	CN1-1	
	CN1A-5	LZ	CN1-8	
	CN1A-6	LA	CN1-4	
	CN1A-7	LB	CN1-6	
	CN1A-8	SP1	CN1-41	
	CN1A-9	COM (DICOM)	CN1-20	
	CN1A-10	SG (DOCOM)	CN1-46	
	CN1A-11	-	-	
	CN1A-12	-	-	
	CN1A-13	-	-	
	CN1A-14	OP	CN1-33	
	CN1A-15	LZR	CN1-9	
	CN1A-16	LAR	CN1-5	
	CN1A-17	LBR	CN1-7	
	CN1A-18	SA	CN1-24	
	CN1A-19	RD	CN1-49	
	CN1A-20	SG (DOCOM)	CN1-47	
CN1B 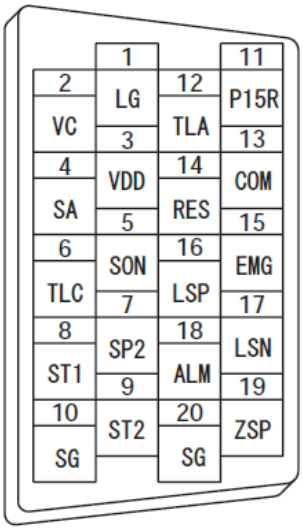	CN1B-1	LG	CN1-30 CN1-34	
	CN1B-2	VC	CN1-2	
	CN1B-3	VDD	-	
	CN1B-4	SA	CN1-22	
	CN1B-5	SON	CN1-15	
	CN1B-6	TLC	CN1-25	
	CN1B-7	SP2	CN1-16	
	CN1B-8	ST1	CN1-17	
	CN1B-9	ST2	CN1-18	
	CN1B-10	SG (DOCOM)	CN1-46	
	CN1B-11	P15R	CN1-1	
	CN1B-12	TLA	CN1-27	
	CN1B-13	COM (DICOM)	CN1-21	
	CN1B-14	RES	CN1-19	
	CN1B-15	EMG (EM2)	CN1-42	
	CN1B-16	LSP	CN1-43	
	CN1B-17	LSN	CN1-44	
	CN1B-18	ALM	CN1-48	
	CN1B-19	ZSP	CN1-23	
	CN1B-20	SG (DOCOM)	CN1-47	

Note. Signal abbreviations in parentheses are for MR-J4-_A_.

3) Torque control mode

MR-J2S-_A_		Signal abbreviation (Note)	MR-J4-_A_	
Connector pin assignment	Connector pin No.		Connector pin No.	Connector pin assignment
CN1A 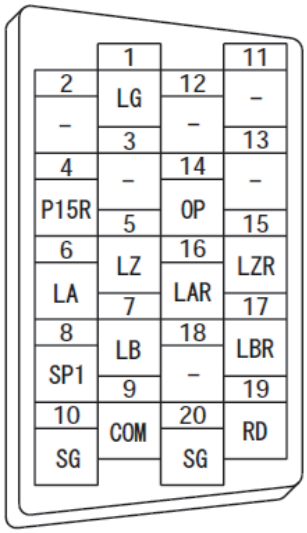	CN1A-1	LG	CN1-3 CN1-28	CN1 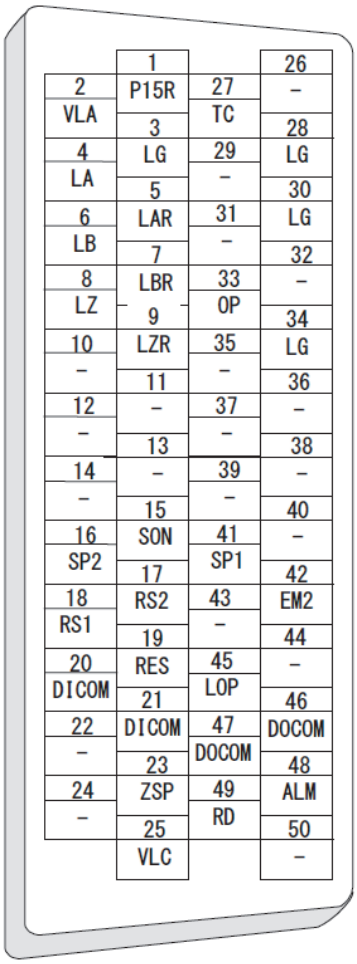
	CN1A-2	-	-	
	CN1A-3	-	-	
	CN1A-4	P15R	CN1-1	
	CN1A-5	LZ	CN1-8	
	CN1A-6	LA	CN1-4	
	CN1A-7	LB	CN1-6	
	CN1A-8	SP1	CN1-41	
	CN1A-9	COM (DICOM)	CN1-20	
	CN1A-10	SG (DOCOM)	CN1-46	
	CN1A-11	-	-	
	CN1A-12	-	-	
	CN1A-13	-	-	
	CN1A-14	OP	CN1-33	
	CN1A-15	LZR	CN1-9	
	CN1A-16	LAR	CN1-5	
	CN1A-17	LBR	CN1-7	
	CN1A-18	-	CN1-24	
	CN1A-19	RD	CN1-49	
	CN1A-20	SG (DOCOM)	CN1-47	
CN1B 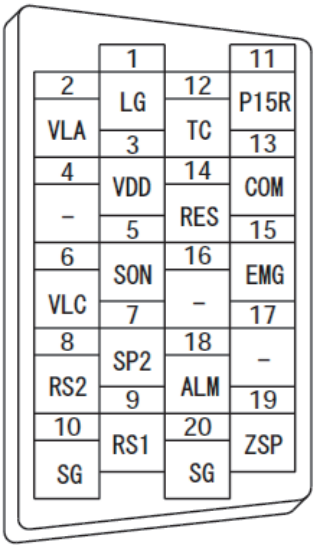	CN1B-1	LG	CN1-30 CN1-34	
	CN1B-2	VLA	CN1-2	
	CN1B-3	VDD	-	
	CN1B-4	-	-	
	CN1B-5	SON	CN1-15	
	CN1B-6	VLC	CN1-25	
	CN1B-7	SP2	CN1-16	
	CN1B-8	RS2	CN1-17	
	CN1B-9	RS1	CN1-18	
	CN1B-10	SG (DOCOM)	CN1-46	
	CN1B-11	P15R	CN1-1	
	CN1B-12	TC	CN1-27	
	CN1B-13	COM (DICOM)	CN1-21	
	CN1B-14	RES	CN1-19	
	CN1B-15	EMG (EM2)	CN1-42	
	CN1B-16	-	-	
	CN1B-17	-	-	
	CN1B-18	ALM	CN1-48	
	CN1B-19	ZSP	CN1-23	
	CN1B-20	SG (DOCOM)	CN1-47	

Note. Signal abbreviations in parentheses are for MR-J4-_A_.

(b) CN3

1) For 7 kW or less

MR-J2S-_A_		Signal abbreviation (Note)	MR-J4-_A_	
Connector pin assignment	Connector pin No.		Connector pin No.	Connector pin assignment
CN3 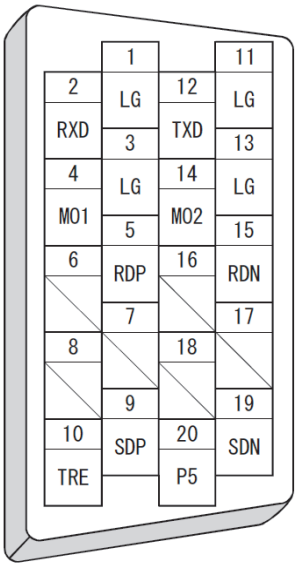	CN3-3	LG	CN6-1	CN6
	CN3-4	MO1	CN6-2	
	CN3-14	MO2	CN6-3	
	CN3-13	LG	-	
	CN3-1	LG	CN3-1	CN3 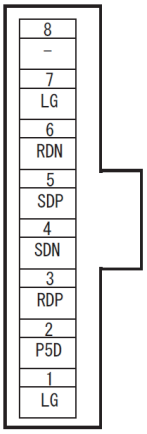
	CN3-5	RDP	CN3-3	
	CN3-9	SDP	CN3-5	
	CN3-11	LG	CN3-7	
	CN3-15	RDN	CN3-6	
	CN3-19	SDN	CN3-4	
	CN3-20	P5 (P5D)	CN3-2	
	CN3-2	RXD	-	
	CN3-10	TRE	-	
	CN3-12	TXD	-	

Note. Signal abbreviations in parentheses are for MR-J4-_A_.

2) For 11 kW to 22 kW

MR-J2S-_A_		Signal abbreviation (Note)	MR-J4-_A_	
Connector pin assignment	Connector pin No.		Connector pin No.	Connector pin assignment
CN3 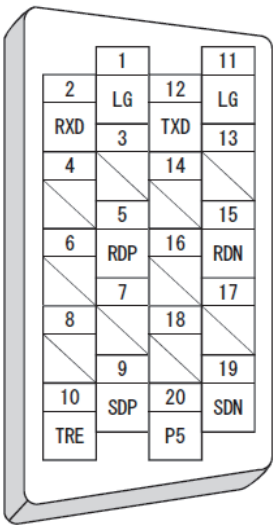	CN3-1	LG	CN3-1	CN3 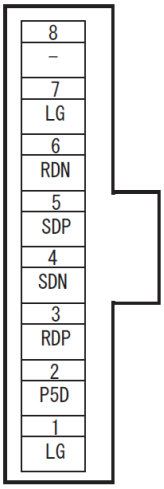
	CN3-5	RDP	CN3-3	
	CN3-9	SDP	CN3-5	
	CN3-11	LG	CN3-7	
	CN3-15	RDN	CN3-6	
	CN3-19	SDN	CN3-4	
	CN3-20	P5(P5D)	CN3-2	
	CN3-2	RXD	-	
	CN3-10	TRE	-	
	CN3-12	TXD	-	

Note. Signal abbreviations in parentheses are for MR-J4-_A_.

(c) CN4 (11 kW to 22 kW only)

MR-J2S-_A_		Signal symbol	MR-J4-_A_	
Connector pin assignment	Connector pin No.		Connector pin No.	Connector pin assignment
CN4 1 MO1 2 MO2 4 LG	CN4-1	MO1	CN6-3	CN6 3 MO1 2 MO2 1 LG
	CN4-2	MO2	CN6-2	
	CN4-4	LG	CN6-1	

3.5 Comparison of Peripheral Equipment

POINT
●Refer to "Part 9: Replacement of Optional Peripheral Equipment".

3.6 Comparison of Parameters

⚠ CAUTION

- Never perform extreme adjustments and changes to the parameters, otherwise the operation may become unstable.
- If fixed values are written in the digits of a parameter, do not change these values.
- Do not change parameters for manufacturer setting.
- Do not enter any setting value other than those specified for each parameter.

POINT

- For the parameter converter function, refer to "Part 7: Common Reference Material".
- To enable a parameter whose abbreviation is preceded by *, turn the power OFF and then ON after setting the parameter.
- For details about parameter settings for replacement, refer to the MR-J4-_A_ Servo Amplifier Instruction Manual.
- With MR-J4-_A_, the deceleration to a stop function is enabled by factory settings. To disable the deceleration to a stop function, set [Pr. PA04] to "0 _ _ _".

3.6.1 Setting requisite parameters upon replacement

The parameters shown in this section are a minimum number of parameters that need to be set for simultaneous replacement. Depending on the settings of the currently used servo amplifier, parameters other than these may need to be set.

(1) Parameters common to position control mode, speed control mode, and torque control mode

Parameter number	Name	Initial value	Setting value	Description
PA04	Function selection A-1	2 0 0 0h	0 0 0 0h	Forced stop deceleration function selection To configure the same settings as for MR-J2S-_A_, select "Forced stop deceleration function disabled (EM1)".
PA09	Auto tuning response	16	8	Auto tuning response setting Refer to "3.6.3 Comparison of parameter details" for the setting value of this parameter upon replacement. It is necessary to make gain adjustment again when replacing. For details about gain adjustment, refer to "MR-J2S-_A_ [Pr. 2] (MR-J4-_A_ [Pr. PA09])" in Section 3.6.3.
PA15	Encoder output pulse	4000	128 (Note)	Used to set the encoder pulses (A-phase and B-phase) output by the servo amplifier.
PC19	Encoder output pulse selection	0 0 0 0h	0 _ 1_h (Note)	Encoder output pulse selection Used to set the encoder pulses output by the servo amplifier. The setting value at left is according to the dividing ratio setting.
PD30	Function selection D-1	0 0 0 0h	1 _ _ _h	This is used to select enabled or disabled for the thermistor of the servo motor. : When using (HA-LFS series) servo motors that have thermal terminals and not connecting thermal signals to the MR-J4 servo amplifier, set this parameter to "1 _ _ _h (Disabled)". The overheat protection of a servo motor is not enabled. Configure a protective circuit.

Note. The example value shown is for when the output pulse setting of an existing HC-KFS motor (encoder resolution: 131072 pulses/rev) is "Dividing ratio: 1/4".

(2) Position control mode

Parameter number	Name	Initial value	Setting value	Description
PA01	Operation mode	1 0 0 0h	_ _ _ 0h	Select the servo amplifier control mode. Select the position control mode.
PA06	Electronic gear numerator (Commanded pulse multiplication numerator)	1	256 (Note)	When using an electronic gear, it is necessary to change the setting value. For simultaneous replacement, set a value by calculating as follows: $\frac{CMX}{CDV} = \frac{\text{Replacement servo motor Encoder resolution}}{\text{Servo motor for MR-J2S Encoder resolution}} \cdot \frac{\text{Former CMX}}{\text{Former CDV}} = \frac{4194304}{131072} \cdot \frac{1}{8} = \frac{256}{1}$ When a geared servo motor is replaced, the actual reduction ratio may differ before and after the replacement. If the ratio differs after the replacement, set the values considering the actual reduction ratio.
PA07	Electronic gear denominator (Commanded pulse multiplication denominator)	1	1 (Note)	
PA13	Command pulse input form	0 1 0 0h	_ x _ _h	Command input pulse train filter selection Selecting the proper filter enables noise immunity enhancement. Make sure to select a filter so as not to cause a position mismatch. For details, refer to "MR-J4-_A_ [Pr. PA13]" in Section 3.6.3. In addition, it is necessary to adjust the command pulse logic to the positioning module. An incorrect logic setting causes the servo motor to not rotate. Make sure to configure the settings. Refer to "3.7 Important Points for Replacement (Command Pulse Logic Settings)".

Note. The example value shown is for when the electronic gear ratio of an existing servo amplifier is set as "8/1".

(3) Speed control mode

Parameter number	Name	Initial value	Setting value	Description
PA01	Operation mode	1 0 0 0h	_ _ _ 2h	Select the servo amplifier control mode. Select the speed control mode.
PC12	Analog speed command - Maximum speed	0	3000	Analog speed command - Maximum speed The setting value at left is for when the HC-SFS53 motor is replaced with the HG-SR52 motor.

(4) Torque control mode

Parameter number	Name	Initial value	Setting value	Description
PA01	Operation mode	1 0 0 0h	_ _ _ 4h	Select the servo amplifier control mode. Select the torque control mode.
PC12	Analog speed limit - Maximum speed	0	3000	Analog speed limit - Maximum speed The setting value at left is for when the HC-SFS53 motor is replaced with the HG-SR52 motor.
PC13	Analog torque command - Maximum output	100.0	100.0	Analog torque command - Maximum output Set the same value as for the MR-J2S-_A_ servo amplifier.

3.6.2 Parameter comparison list

POINT

●Manufacturer setting parameters are not described here.

MR-J2S-_A_ parameters						MR-J4-_A_ parameters				
No.	Abbreviation	Parameter name		Initial value	Customer setting value	No.	Abbreviation	Parameter name	Initial value	Customer setting value
0	*STY	Control mode, Regenerative option selection	Control mode	0000h		PA01	*STY	Operation mode	1000h	
			Regenerative option			PA02	*REG	Regenerative option	0000h	
1	*OP1	Function selection 1	Input filter	0002h		PD29	*DIF	Input filter setting	0004h	
			Electromagnetic brake interlock selection			PD24	*DO2	Output device selection 2 (electromagnetic brake interlock)	000Ch	
			Dynamic brake interlock selection (11 kW or more)			PD23	*DO1	Output device selection 1	0004h	
						PD25	*DO3	Output device selection 3	0004h	
						PD26	*DO4	Output device selection 4	0007h	
						PD28	*DO6	Output device selection 6	0002h	
			Absolute position detection system selection			PA03	*ABS	Absolute position detection system selection	0000h	
2	ATU	Auto tuning	Mode setting Response level setting	7 kW or less: 0105 h 11 kW or more: 0102 h		PA08	ATU	Auto tuning mode (Note)	0001h	
						PA09	RSP	Auto tuning response (Note)	16	
3	CMX	Electronic gear numerator (command pulse multiplication numerator)		1		PA06	CMX	Electronic gear numerator (command pulse multiplication numerator)	1	
						PA21	*AOP3	Electronic gear selection	0001h	
4	CDV	Electronic gear denominator (command pulse multiplication denominator)		1		PA07	CDV	Electronic gear denominator (command pulse multiplication denominator)	1	
						PA21	*AOP3	Electronic gear selection	0001h	
5	INP	In-position range		100		PA10	INP	In-position range	100	
6	PG1	Position loop gain 1		7 kW or less: 35 11 kW or more: 19		PB07	PG1	Model loop gain (Note)	15.0	
7	PST	Position command acceleration/deceleration time constant (position smoothing)		3		PB03	PST	Position command acceleration/deceleration time constant (position smoothing)	0	
8	SC1	Internal speed command 1		100		PC05	SC1	Internal speed command 1	100	
		Internal speed limit 1						Internal speed limit 1		
9	SC2	Internal speed command 2		500		PC06	SC2	Internal speed command 2	500	
		Internal speed limit 2						Internal speed limit 2		
10	SC3	Internal speed command 3		1000		PC07	SC3	Internal speed command 3	1000	
		Internal speed limit 3						Internal speed limit 3		
11	STA	Acceleration time constant		0		PC01	STA	Acceleration time constant	0	
12	STB	Deceleration time constant		0		PC02	STB	Deceleration time constant	0	
13	STC	S-pattern acceleration/deceleration time constant		0		PC03	STC	S-pattern acceleration/deceleration time constant	0	
14	TQC	Torque command time constant		0		PC04	TQC	Torque command time constant	0	
15	*SNO	Station number setting		0		PC20	*SNO	Station number setting	0	
16	*BPS	Serial communication function selection - Alarm history clear		0000h		PC18	*BPS	Alarm history clear	0000h	
						PC21	*SOP	RS-422 communication function selection (RS-232C is not supported.)	0000h	
17	MOD	Analog monitor output		0100h		PC14	MOD1	Analog monitor 1 output	0000h	
						PC15	MOD2	Analog monitor 2 output	0001h	
18	*DMD	Status display selection		0000h		PC36	*DMD	Status display selection	0000h	
19	*BLK	Parameter writing inhibit		0000h		PA19	*BLK	Parameter writing inhibit	00AAh	
20	*OP2	Function selection 2	Restart after instantaneous power failure selection	0000h				No corresponding parameter		
			Servo-lock upon stop selection			PC23	*COP2	Servo-lock selection at speed control stop	0000h	
			Slight vibration suppression control			PB24	*MVS	Slight vibration suppression control selection	0000h	
21	*OP3	Function selection 3 (command pulse selection)		0000h		PA13	*PLSS	Command pulse input form	0100h	
22	*OP4	Function selection 4	LSP, LSN stop selection	0000h		PD30	*DOP1	Function selection D-1 (LSP, LSN stop selection)	0000h	
			VC, VLA voltage averaging			PC23	*COP2	Function selection C-2 (VC, VLA voltage averaging)	0000h	
23	FFC	Feed forward gain		0		PB04	FFC	Feed forward gain (Note)	0	

MR-J2S-_A_ parameters					MR-J4-_A_ parameters				
No.	Abbreviation	Parameter name	Initial value	Customer setting value	No.	Abbreviation	Parameter name	Initial value	Customer setting value
24	ZSP	Zero speed	50		PC17	ZSP	Zero speed	50	
25	VCM	Analog speed command - Maximum speed	0		PC12	VCM	Analog speed command - Maximum speed	0	
		Analog speed limit maximum speed					Analog speed limit - Maximum speed		
26	TLC	Analog torque command maximum output	100		PC13	TLC	Analog torque command maximum output	100.0	
27	*ENR	Encoder output pulses	4000		PA15	*ENR	Encoder output pulses	4000	
					PC19	*ENRS	Encoder output pulse selection	0000h	
28	TL1	Internal torque limit 1	100		PA11	TLP	Forward rotation torque limit	100.0	
					PA12	TLN	Reverse rotation torque limit	100.0	
29	VCO	Analog speed command offset	Differs depending on servo amplifier		PC37	VCO	Analog speed command offset	Differs depending on servo amplifier	
		Analog speed limit offset							
30	TLO	Analog torque command offset	0		PC38	TPO	Analog torque command offset	0	
		Analog torque limit offset					Analog torque limit offset		
31	MO1	Analog monitor 1 offset	0		PC39	MO1	Analog monitor 1 offset	0	
32	MO2	Analog monitor 2 offset	0		PC40	MO2	Analog monitor 2 offset	0	
33	MBR	Electromagnetic brake sequence output	100		PC16	MBR	Electromagnetic brake sequence output	0	
34	GD2	Load to motor inertia ratio	70		PB06	GD2	Load to motor inertia ratio	7.00	
35	PG2	Position loop gain 2	7 kW or less: 35 11 kW or more: 19		PB08	PG2	Position loop gain (Note)	37.0	
36	VG1	Speed loop gain 1	7 kW or less: 177 11 kW or more: 96				No corresponding parameter		
37	VG2	Speed loop gain 2	7 kW or less: 817 11 kW or more: 455		PB09	VG2	Speed loop gain (Note)	823	
38	VIC	Speed integral compensation	48		PB10	VIC	Speed integral compensation (Note)	33.7	
39	VDC	Speed differential compensation	980		PB11	VDC	Speed differential compensation (Note)	980	
41	*DIA	Input signal automatic ON selection	0000h		PD01	*DIA1	Input signal automatic on selection 1	0000h	
42	*DI1	Input signal selection 1 (LOP assignment) Pin CN1B-5	0003h		PD03	*DI1L	Input device selection 1L	0202h	
					PD04	*DI1H	Input device selection 1H	0002h	
		Pin CN1B-14			PD11	*DI5L	Input device selection 5L	0303h	
					PD12	*DI5H	Input device selection 5H	0003h	
		Pin CN1A-8			PD13	*DI6L	Input device selection 6L	2006h	
					PD14	*DI6H	Input device selection 6H	0020h	
		Pin CN1B-7			PD05	*DI2L	Input device selection 2L	2100h	
					PD06	*DI2H	Input device selection 2H	0021h	
		Pin CN1B-8			PD07	*DI3L	Input device selection 3L	0704h	
					PD08	*DI3H	Input device selection 3H	0007h	
		Pin CN1B-9			PD09	*DI4L	Input device selection 4L	0805h	
					PD10	*DI4H	Input device selection 4H	0008h	
		CR selection			PD32	*DOP3	CR selection	0000h	
43	*DI2	Input signal selection 2 (CN1B-5)	0111h		PD03	*DI1L	Input device selection 1L	0202h	
					PD04	*DI1H	Input device selection 1H	0002h	
44	*DI3	Input signal selection 3 (CN1B-14)	0222h		PD11	*DI5L	Input device selection 5L	0303h	
					PD12	*DI5H	Input device selection 5H	0003h	
45	*DI4	Input signal selection 4 (CN1A-8)	0665h		PD13	*DI6L	Input device selection 6L	2006h	
					PD14	*DI6H	Input device selection 6H	0020h	
46	*DI5	Input signal selection 5 (CN1B-7)	0770h		PD05	*DI2L	Input device selection 2L	2100h	
					PD06	*DI2H	Input device selection 2H	0021h	
47	*DI6	Input signal selection 6 (CN1B-8)	0883h		PD07	*DI3L	Input device selection 3L	0704h	
					PD08	*DI3H	Input device selection 3H	0007h	

MR-J2S-_A_ parameters						MR-J4-_A_ parameters				
No.	Abbreviation	Parameter name		Initial value	Customer setting value	No.	Abbreviation	Parameter name	Initial value	Customer setting value
48	*DI7	Input signal selection 7 (CN1B-9)		0994h		PD09	*DI4L	Input device selection 4L	0805h	
						PD10	*DI4H	Input device selection 4H	0008h	
49	*DO1	Output signal selection 1	Alarm code	0000h		PD34	DOP5	Function selection D-5	0000h	
		WNG (warning) output setting	Pin CN1A-19			PD28	*DO6	Output device selection 6	0002h	
			Pin CN1B-18					No corresponding parameter		
			Pin CN1A-18			PD25	*DO3	Output device selection 3	0004h	
			Pin CN1B-19			PD24	*DO2	Output device selection 2	000Ch	
			Pin CN1B-6			PD26	*DO4	Output device selection 4	0007h	
		BWNG (battery warning) output setting	Pin CN1A-19			PD28	*DO6	Output device selection 6	0002h	
			Pin CN1B-18					No corresponding parameter		
			Pin CN1A-18			PD25	*DO3	Output device selection 3	0004h	
			Pin CN1B-19			PD24	*DO2	Output device selection 2	000Ch	
			Pin CN1B-6			PD26	*DO4	Output device selection 4	0007h	
51	*OP6	Function selection 6	Operation selection at Reset ON	0000h		PD30	*DOP1	Function selection D-1	0000h	
53	*OP8	Function selection 8		0000h				No corresponding parameter		
54	*OP9	Function selection 9	Servo motor rotation direction selection	0000h		PA14	*POL	Servo motor rotation direction selection	0	
			Encoder pulse phase, setting selection			PC19	*ENRS	Encoder output pulse selection	0000h	
55	*OPA	Function selection A	Position command acceleration/ deceleration time constant control selection	0000h		PB25	*BOP1	Function selection B-1	0000h	
56	SIC	Serial communication time-out selection		0				No corresponding parameter		
58	NH1	Machine resonance suppression filter 1	Notch frequency selection	0000h		PB01	FILT	Adaptive tuning mode (adaptive filter II)	0000h	
						PB13	NH1	Machine resonance suppression filter 1	4500	
			Notch depth selection			PB14	NHQ1	Notch shape selection 1	0000h	
59	NH2	Machine resonance suppression filter 2	Notch frequency selection	0000h		PB15	NH2	Machine resonance suppression filter 2	4500	
			Notch depth			PB16	NHQ2	Notch shape selection 2	0000h	
60	LPF	Low-pass filter/ Adaptive vibration suppression control	Low-pass filter selection	0000h		PB18	LPF	Low-pass filter setting	3141	
						PB23	VFBF	Low-pass filter selection	0000h	
			Adaptive vibration suppression control level selection			PB01	FILT	Adaptive tuning mode (adaptive filter II)	0000h	
61	GD2B	Load to motor inertia ratio 2		70		PB29	GD2B	Gain switching load to motor inertia ratio (Note)	7.00	
62	PG2B	Position loop gain 2 changing ratio		100		PB30	PG2B	Position loop gain after gain switching (Note)	0.0	
63	VG2B	Speed loop gain 2 changing ratio		100		PB31	VG2B	Speed loop gain after gain switching (Note)	0	
64	VICB	Speed integral compensation changing ratio		100		PB32	VICB	Speed integral compensation after gain switching (Note)	0.0	
65	*CDP	Gain switching selection		0000h		PB26	*CDP	Gain switching function	0000h	
66	CDS	Gain switching condition		10		PB27	CDL	Gain switching condition	10	
67	CDT	Gain switching time constant		1		PB28	CDT	Gain switching time constant	1	
69	CMX2	Command pulse multiplication numerator 2		1		PC32	CMX2	Command input pulse multiplication numerator 2	1	
70	CMX3	Command pulse multiplication numerator 3		1		PC33	CMX3	Command input pulse multiplication numerator 3	1	
71	CMX4	Command pulse multiplication numerator 4		1		PC34	CMX4	Command input pulse multiplication numerator 4	1	
72	SC4	Internal speed command 4		200		PC08	SC4	Internal speed command 4	200	
		Internal speed limit 4						Internal speed limit 4		
73	SC5	Internal speed command 5		300		PC09	SC5	Internal speed command 5	300	
		Internal speed limit 5						Internal speed limit 5		
74	SC6	Internal speed command 6		500		PC10	SC6	Internal speed command 6	500	
		Internal speed limit 6						Internal speed limit 6		
75	SC7	Internal speed command 7		800		PC11	SC7	Internal speed command 7	800	
		Internal speed limit 7						Internal speed limit 7		
76	TL2	Internal torque limit 2		100		PC35	TL2	Internal torque limit 2	100.0	

Note. Parameters related to gain adjustment are different from those for the MR-J2S-_A_ servo amplifier. For gain adjustment, refer to MR-J4_A_ Servo Amplifier Instruction Manual.

3.6.3 Comparison of parameter details

POINT

- The symbols in the control mode column mean the following control modes:
  - P: Position control mode
  - S: Speed control mode
  - T: Torque control mode

MR-J2S-_A_			MR-J4-_A_			Control mode
No.	Name and function	Initial value	No.	Name and function	Initial value	
0	Control mode and regenerative option selection Used to select a control mode and a regenerative option. 0 _ 0 _ Selection of control mode 0: Position 1: Position and speed 2: Speed 3: Speed and torque 4: Torque 5: Torque and position Selection of regenerative option 00: • The regenerative option is not used by the servo amplifier at 7 kW or less (built-in regenerative resistor is used). • The supplied regenerative resistor or regenerative option is used in the servo amplifier at 11 kW or more. 01: FR-RC, FR-BU2, FR-CV 02: MR-RB032 03: MR-RB12 04: MR-RB32 05: MR-RB30 06: MR-RB50 (Cooling fan is required.) 08: MR-RB31 09: MR-RB51 (Cooling fan is required.) 0E: When increasing the capabilities by using a cooling fan to cool the supplied regeneration resistor with the servo amplifier of 11 kW to 22 kW MR-RB65, 66, and 67 are regenerative options with GRZG400-2Ω, GRZG400-1Ω, and GRZG400-0.8Ω in the case, respectively. When using any of these regenerative options, configure the same parameter setting as when using GRZG400-2Ω, GRZG400-1Ω, and GRZG400-0.8Ω. (Use a supplied regenerative resistor or regenerative option on a servo amplifier of 11 kW or more.) . **POINT** ● An incorrect setting may cause the regenerative option to burn out. ● When a regenerative option that is not available to use on a servo amplifier is selected, a parameter error (AL. 37) occurs.	0000h	PA01	Operation mode Select a control mode. Refer to the comparison table below for the setting method. Control mode setting comparison table MR-J2S-_A_ No.0: _ _ 0 0, _ _ 0 1, _ _ 0 2, _ _ 0 3, _ _ 0 4, _ _ 0 5 → MR-J4-_A_ PA01: 1 0 0 0, 1 0 0 1, 1 0 0 2, 1 0 0 3, 1 0 0 4, 1 0 0 5	1000h	P S T
			PA02	Regenerative options Used to select the regenerative option. Refer to the comparison table below for the setting method. Regenerative option setting comparison table MR-J2S-_A_ No.0: 0 0 _ _, 0 1 _ _, 0 2 _ _, 0 3 _ _, 0 4 _ _, 0 5 _ _, 0 6 _ _, 0 8 _ _, 0 9 _ _, 0 E _ _ → MR-J4-_A_ PA02: 0 0 0 0, 0 0 0 1, 0 0 0 2, 0 0 0 3, 0 0 0 4, 0 0 0 5, 0 0 0 6, 0 0 0 8, 0 0 0 9, 0 0 F A	0000h	

<table>
<tr><th colspan="3">MR-J2S-_A_</th><th colspan="3">MR-J4-_A_</th><th rowspan="2">Control mode</th></tr>
<tr><th>No.</th><th>Name and function</th><th>Initial value</th><th>No.</th><th>Name and function</th><th>Initial value</th></tr>
<tr><td>1</td><td>Function selection 1
Select a value for the input filter, pin CN1B-19 function, and absolute position detection system.
 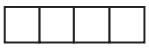
Input filter
If an external input signal causes chattering due to noise, etc., the input filter is used to suppress it.
0: None
1: 1.777 [ms]
2: 3.555 [ms]
3: 5.333 [ms]
CN1B-pin 19’s function selection
0: Zero speed detection (ZSP)
1: Electromagnetic brake interlock (MBR)
CN1B-pin 18’s function selection
0: ALM (Alarm)
1: DB (Dynamic brake interlock)
Make the DB effective when using the external dynamic brake at 11 kW or more.
Absolute position detection system selection
0: Used in incremental system
1: Used in absolute position detection system</td><td>0002h</td><td>PD29</td><td>Input filter setting
If an external input signal causes chattering due to noise, etc., the input filter is used to suppress it.
Refer to the comparison table below for the setting method.
Input filter setting comparison table
<table><tr><th>MR-J2S-_A_</th></tr><tr><td>No.1</td></tr><tr><td>_ _ _ 0</td></tr><tr><td>_ _ _ 1</td></tr><tr><td>_ _ _ 2</td></tr><tr><td>_ _ _ 3</td></tr></table>→<table><tr><th>MR-J4-_A_</th></tr><tr><td>PD29</td></tr><tr><td>0 0 0 0</td></tr><tr><td>0 0 0 2</td></tr><tr><td>0 0 0 4</td></tr><tr><td>0 0 0 4</td></tr></table></td><td>0004h</td><td rowspan="4">P
S
T</td></tr>
<tr><td></td><td></td><td></td><td>PD24</td><td>Output device selection 2 (electromagnetic brake interlock selection)
Any output device can be assigned to the CN1-23 pin.
Refer to the comparison table below for the setting method.
Output device setting comparison table
<table><tr><th>MR-J2S-_A_</th></tr><tr><td>No.1</td></tr><tr><td>_ _ 0 _</td></tr><tr><td>_ _ 1 _</td></tr></table>→<table><tr><th>MR-J4-_A_</th></tr><tr><td>PD24</td></tr><tr><td>0 0 0 C</td></tr><tr><td>0 0 0 5</td></tr></table></td><td>000Ch</td></tr>
<tr><td></td><td></td><td></td><td>PD23
PD25
PD26
PD28</td><td>Device selection
Set "_ _ 0 6" as necessary and assign DB (dynamic brake interlock) to a specific pin on the CN1 connector.
The settings differ when the renewal tool is used.
For the settings, refer to "[Appendix 2] Introduction to Renewal Tool".</td><td>0004h
0004h
0007h
0002h</td></tr>
<tr><td></td><td></td><td></td><td>PA03</td><td>Absolute position detection system selection
When using the absolute position detection system, set "_ _ _ 1".</td><td>0000h</td></tr>
</table>

<table>
<tr><th colspan="3">MR-J2S-_A_</th><th colspan="3">MR-J4-_A_</th><th rowspan="2">Control mode</th></tr>
<tr><th>No.</th><th>Name and function</th><th>Initial value</th><th>No.</th><th>Name and function</th><th>Initial value</th></tr>
<tr><td rowspan="2">2</td><td rowspan="2">Auto Tuning
Select a response level, etc. when performing auto tuning.
0 _ 0 _
Response level setting
Gain adjustment mode setting
<table><tr><th>Setting value</th><th>Response</th><th>Guideline for machine resonance frequency</th></tr><tr><td>1</td><td>Low response</td><td>15Hz</td></tr><tr><td>2</td><td>↑</td><td>20Hz</td></tr><tr><td>3</td><td></td><td>25Hz</td></tr><tr><td>4</td><td></td><td>30Hz</td></tr><tr><td>5</td><td></td><td>35Hz</td></tr><tr><td>6</td><td></td><td>45Hz</td></tr><tr><td>7</td><td>↓</td><td>55Hz</td></tr><tr><td>8</td><td>Middle response</td><td>70Hz</td></tr><tr><td>9</td><td>↑</td><td>85Hz</td></tr><tr><td>A</td><td></td><td>105Hz</td></tr><tr><td>B</td><td></td><td>130Hz</td></tr><tr><td>C</td><td></td><td>160Hz</td></tr><tr><td>D</td><td>↓</td><td>200Hz</td></tr><tr><td>E</td><td></td><td>240Hz</td></tr><tr><td>F</td><td>High response</td><td>300Hz</td></tr></table><table><tr><th>Setting value</th><th>Gain adjustment mode</th><th>Adjustment</th></tr><tr><td>0</td><td>Interpolation mode</td><td>Fixes to position loop gain 1 (parameter No. 6).</td></tr><tr><td>1</td><td>Auto tuning mode 1</td><td>This is ordinary auto tuning.</td></tr><tr><td>2</td><td>Auto tuning mode 2</td><td>Fixes to the load to motor inertia ratio setting with parameter No. 34. Responsive setting is changeable.</td></tr><tr><td>3</td><td>Manual mode 1</td><td>Adjusted manually simply.</td></tr><tr><td>4</td><td>Manual mode 2</td><td>Adjusted all gains manually.</td></tr></table></td><td rowspan="2">7 kW or less:
0105h

11 kW or more:
0102h</td><td>PA09</td><td>Auto tuning response
Set a response of the auto tuning.
Refer to the comparison table below for the setting method.

Response level comparison table
<table><tr><th>MR-J2S-_A_
No.2</th><th>→</th><th>MR-J4-_A_
PA09</th></tr><tr><td>_ _ 0 1</td><td></td><td>8 or 9</td></tr><tr><td>_ _ 0 2</td><td></td><td>1 1</td></tr><tr><td>_ _ 0 3</td><td></td><td>1 3</td></tr><tr><td>_ _ 0 4</td><td></td><td>1 4</td></tr><tr><td>_ _ 0 5</td><td></td><td>15 or 16</td></tr><tr><td>_ _ 0 6</td><td></td><td>17 or 18</td></tr><tr><td>_ _ 0 7</td><td></td><td>19 or 20</td></tr><tr><td>_ _ 0 8</td><td></td><td>21 or 22</td></tr><tr><td>_ _ 0 9</td><td></td><td>2 3</td></tr><tr><td>_ _ 0 A</td><td></td><td>2 5</td></tr><tr><td>_ _ 0 B</td><td></td><td>26 or 27</td></tr><tr><td>_ _ 0 C</td><td></td><td>28 or 29</td></tr><tr><td>_ _ 0 D</td><td></td><td>30 or 31</td></tr><tr><td>_ _ 0 E</td><td></td><td>3 2</td></tr><tr><td>_ _ 0 F</td><td></td><td>33 or 34</td></tr></table></td><td>16</td><td rowspan="2">P
S</td></tr>
<tr><td>PA08</td><td>Auto tuning mode
Select the gain adjustment mode.
It is necessary to make gain adjustment again when replacing.
Select auto tuning mode 1 (initial value) and make gain adjustment.
For details on how to make gain adjustment, refer to MR-J4-_A_ Servo Amplifier Instruction Manual, Chapter 6.</td><td>0001h</td></tr>
<tr><td>3</td><td>Electronic gear numerator
(command pulse multiplication numerator)
Used to set a value for the electronic gear numerator.
When "0" is set as the setting value, the resolution of the connected servo motor is set automatically. For example, the HC-MFS series is set to 131072 pulses.</td><td>1</td><td>PA21</td><td>Electronic gear selection
Use the initial value when replacing.</td><td>0001h</td><td rowspan="2">P</td></tr>
<tr><td></td><td></td><td></td><td>PA06</td><td>Electronic gear numerator
(command pulse multiplication numerator)
Used to set a multiplier for the command pulse.</td><td>1</td></tr>
<tr><td>4</td><td>Electronic gear denominator
(command pulse multiplication denominator)
Used to set a value for the electronic gear denominator.</td><td>1</td><td>PA21</td><td>Electronic gear selection
Use the initial value when replacing.</td><td>0001h</td><td rowspan="2">P</td></tr>
<tr><td></td><td></td><td></td><td>PA07</td><td>Electronic gear denominator
(command pulse multiplication denominator)
Used to set a multiplier for the command pulse.</td><td>1</td></tr>
</table>

MR-J2S-_A_			MR-J4-_A_			Control mode
No.	Name and function	Initial value	No.	Name and function	Initial value	
5	In-position range Used to set the range where INP (positioning completion) is output by the command pulse unit before an electronic gear is calculated. For example, when wanting to set 100 μm in a state of direct connection to the ball screw, a lead wire length of 10 mm, a feedback pulse number of 131072 pulses/rev, and electronic gear numerator (CMX) / electronic gear denominator (CDV) = 16384/125 (unit setting of 10 μm per pulse), set "10", as shown in the equation below. $\frac{100\ [\mu m] \times 10^{-6}}{10\ [mm] \times 10^{-3}} \times 131072\ [pulse/rev] \times \frac{125}{16384} \fallingdotseq 10$	100	PA10	In-position range Used to set an in-position range per command pulse unit. Set the same value as for MR-J2S-_A_.	100	P
6	Position loop gain 1 Used to set the gain of the position loop. Increase the gain to improve track ability in response to the position command. When auto tuning mode 1 or 2 is selected, the auto tuning result is automatically used.	7 kW or less: 35 11 kW or more: 19	PB07	Model loop gain Used to set the response gain till the set position. If the setting value is increased, traceability for position command is improved. However, if the setting value is too large, it tends to generate vibration and noise. This parameter can be set either automatically or manually depending on the [Pr. PA08] setting.	15.0	P
7	Position command acceleration/deceleration time constant (Position smoothing) This is used to set the constant of a primary delay to the position command. The control method can be selected from Primary delay and Linear acceleration/deceleration in [Pr. 55]. The setting range of Linear acceleration/deceleration is 0 to 10 ms. When setting a value of 10 ms or more, the setting value is recognized as 10 ms. POINT ●When Linear acceleration/deceleration is selected, do not select Control switching ([Pr. 0]) and Restart after instantaneous power failure ([Pr. 20]). Selecting them will cause the servo motor to make a sudden stop at the time of position control switching or at restart. (Example) When a command is given from a synchronizing encoder, synchronous operation will start smoothly even if it starts during line operation. 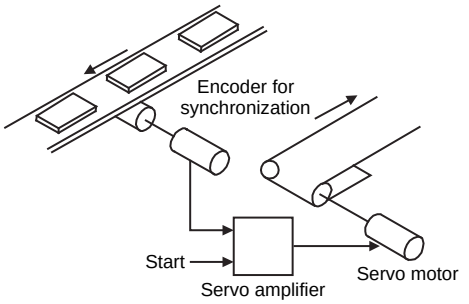 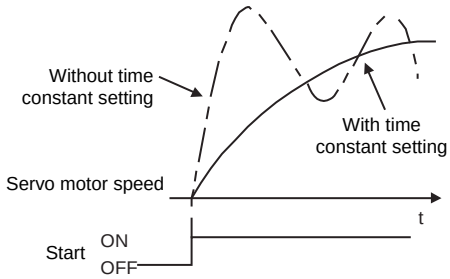 	3	PB03	Position command acceleration/deceleration time constant (Position smoothing) This is used to set the constant of a primary delay to the position command. Set the same value as for MR-J2S-_A_.	0	P

MR-J2S-_A_			MR-J4-_A_			Control mode
No.	Name and function	Initial value	No.	Name and function	Initial value	
8	Internal speed command 1 This is used to set speed 1 of internal speed commands.	100	PC05	Internal speed command 1 This is used to set speed 1 of internal speed commands. Set the same value as for MR-J2S-_A_.	100	S
	Internal speed limit 1 This is used to set speed 1 of internal speed limits.			Internal speed limit 1 This is used to set speed 1 of internal speed limits. Set the same value as for MR-J2S-_A_.		T
9	Internal speed command 2 This is used to set speed 2 of internal speed commands.	500	PC06	Internal speed command 2 This is used to set speed 2 of internal speed commands. Set the same value as for MR-J2S-_A_.	500	S
	Internal speed limit 2 This is used to set speed 2 of internal speed limits.			Internal speed limit 2 This is used to set speed 2 of internal speed limits. Set the same value as for MR-J2S-_A_.		T
10	Internal speed command 3 This is used to set speed 3 of internal speed commands.	1000	PC07	Internal speed command 3 This is used to set speed 3 of internal speed commands. Set the same value as for MR-J2S-_A_.	1000	S
	Internal speed limit 3 This is used to set speed 3 of internal speed limits.			Internal speed limit 3 This is used to set speed 3 of internal speed limits. Set the same value as for MR-J2S-_A_.		T
11	Speed acceleration time constant Used to set the acceleration time required to reach the rated speed from 0 r/min in response to an analog speed command and internal speed commands 1 to 7. 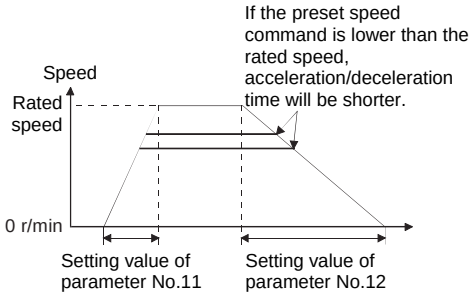 For example, for a servo motor with a rated speed of 3000 r/min, set 3000 (3 s) to increase the speed from 0 to 1000 r/min in 1 s.	0	PC01	Speed acceleration time constant Used to set the acceleration time required to reach the rated speed from 0 r/min in response to VC (analog speed command) and internal speed commands 1 to 7 ([Pr. PC05] to [Pr. PC11]). Set the same value as for MR-J2S-_A_.	0	S T
12	Speed deceleration time constant Used to set the deceleration time required to reach 0 r/min from the rated speed in response to an analog speed command and internal speed commands 1 to 7.	0	PC02	Speed deceleration time constant Used to set the deceleration time required to reach 0 r/min from the rated speed in response to VC (analog speed command) and internal speed commands 1 to 7 ([Pr. PC05] to [Pr. PC11]). Set the same value as for MR-J2S-_A_.	0	S T

MR-J2S-_A_			MR-J4-_A_			Control mode
No.	Name and function	Initial value	No.	Name and function	Initial value	
13	S-pattern acceleration/deceleration time constant This is used to smooth start/stop of the servo motor. Set the time of the arc part for S-pattern acceleration/deceleration. 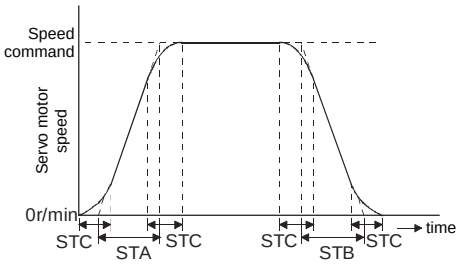 STA: Acceleration time constant ([Pr. 11]) STB: Deceleration time constant ([Pr. 12]) STC: S-pattern acceleration/deceleration time constant ([Pr. 13]) If STA (acceleration time constant) or STB (deceleration time constant) is set to be longer, an error may occur in the time of the arc part for the S-pattern acceleration/deceleration time constant setting. The upper limit value of the actual arc part time is limited by $\frac{2000000}{STA}$ for acceleration or by $\frac{2000000}{STB}$ for deceleration. (Example) When STA, STB, and STC are set to 20000, 5000, and 200, respectively, the actual arc part time is as follows. At time of acceleration: 100 [ms] (Because of $\frac{2000000}{20000}$ = 100 [ms] < 200 [ms], it is limited to 100 [ms].) At time of acceleration: 200 [ms] (Because of $\frac{2000000}{5000}$ = 400 [ms] > 200 [ms], it becomes 200 [ms] as designed.)	0	PC03	S-pattern acceleration/deceleration time constant This is used to smooth start/stop of the servo motor. Set the time of the arc part for S-pattern acceleration/deceleration. Set the same value as for MR-J2S-_A_.	0	S T
14	Torque command time constant This is used to set the constant of a primary delay to the torque command. 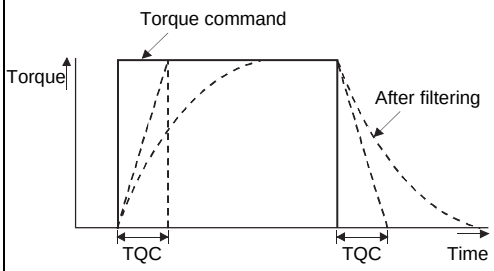 TQC: Torque command time constant	0	PC04	Torque command time constant This is used to set the constant of a primary delay to the torque command. Set the same value as for MR-J2S-_A_.	0	T
15	Station number setting Specifies the station No. of serial communication. Always set one station to one axis of the servo amplifier. Setting one station number to two or more stations will disable a normal communication.	0	PC20	Station number setting Used to set the station No. of the servo amplifier. Setting range: 0 to 31	0	P S T

MR-J2S-_A_			MR-J4-_A_			Control mode
No.	Name and function	Initial value	No.	Name and function	Initial value	
16	Serial communication function selection - Alarm history clear Used to select the serial communication baud rate and various conditions for communication, and to clear the alarm history. □□□□ Selection of serial communication baud rate 0: 9600[bps] 1: 19200[bps] 2: 38400[bps] 3: 57600[bps] Alarm history clear 0: Disabled 1: Enabled When alarm history clear is enabled, the alarm history is cleared at next power-on. After the alarm history is cleared, the setting is automatically disabled (0). Serial communication selection 0: Use RS-232C 1: Use RS-422 Serial communication response delayed time 0: Disabled 1: Enabled, reply sent after delay time of 800μs or more.	0000h	PC18	Alarm history clear selection Used to clear the alarm history. □□□□ Alarm history clear 0: Disabled 1: Enabled When "Enabled" is set, the alarm history is cleared at next power-on. After the alarm history is cleared, the setting is automatically disabled.	0000h	P S T
			PC21	RS-422 communication function selection Used to select the communication speed. Adjust the speed to that of the transmitting side (master station). RS-232C is not supported. □□□□ Serial communication baud rate 0: 9600 [bps] 1: 19200 [bps] 2: 38400 [bps] 3: 57600 [bps] 4: 11520 [bps] RS-422 communication response delay time selection 0: Disabled 1: Enabled (reply sent after delay time of 800μs or more).	0000h	P S T
17	Analog monitor output Used to select the signals output to analog monitor 1 (MO1) and analog monitor 2 (MO2). 0 □ 0 □	0100h	PC14	Output to analog monitor 1 Refer to the comparison table below for the setting method.	0000h	P S T
			PC15	Output to analog monitor 2 Refer to the comparison table below for the setting method.	0001h	

MR-J2S-_A_	
No.17 (Target digit number)	Display definition
0	Servo motor speed (±8 V/max. speed) (Note 1)
1	Torque (±8 V/max. torque) (Note 1)
2	Servo motor speed (+8 V/max. speed) (Note 1)
3	Torque (+8 V/max. torque) (Note 1)
4	Current command (±8 V/max. current command)
5	Command pulse frequency (±10 V/500 kpulses/s)
6	Droop pulses (±10 V/128 pulses)
7	Droop pulses (±10 V/2048 pulses)
8	Droop pulses (±10 V/8192 pulses)
9	Droop pulses (±10 V/32768 pulses)
A	Droop pulses (±10 V/131072 pulses)
B	Bus voltage (+8 V/400 V)

→

MR-J4-_A_	
PC14/PC15	Display definition
0000	Servo motor speed (±8 V/max. speed) (Note 1)
0001	Torque (±8 V/max. torque) (Note 1)
0002	Servo motor speed (+8 V/max. speed) (Note 1)
0003	Torque (+8 V/max. torque) (Note 1)
0004	Current command (±8 V/max. current command)
0005	Command pulse frequency (±10 V/4 Mpulses/s) (Note 2)
0006	Servo motor-side droop pulses (±10 V/100 pulses) (Note 2)
0007	Servo motor-side droop pulses (±10 V/1000 pulses) (Note 2)
0008	Servo motor-side droop pulses (±10 V/10000 pulses) (Note 2)
0008 or 0009	(Note 2, 3)
0009	Servo motor-side droop pulses (±10 V/100000 pulses) (Note 2)
000D	Bus voltage (+8 V/400 V)

Note 1. "Maximum speed" and " Maximum torque" differ depending on the servo motor. Therefore, after the existing motor has been replaced with an HG motor, the output voltage for "Maximum speed" or " Maximum torque" may differ.

2. Units used for MR-J2S-_A_ are different from those for MR-J4-_A_. Note that the input range of existing equipment needs to be adjusted.

3. Set "0008" or "0009". When setting the value, note that the input range of existing equipment needs to be adjusted.

MR-J2S-_A_			MR-J4-_A_			Control mode
No.	Name and function	Initial value	No.	Name and function	Initial value	
18	Status display selection This is used to select a status display shown at power-on. 0 0 [ ] [ ] Status display selection at power-on 0: Cumulative feedback pulse 1: Servo motor speed 2: Droop pulse 3: Cumulative command pulse 4: Command pulse frequency 5: Analog speed command voltage (Note 1) 6: Analog torque command voltage (Note 2) 7: Regenerative load ratio 8: Effective load ratio 9: Peak load ratio A: Instantaneous torque B: Within one-revolution position at low C: Within one-revolution position at high D: ABS counter E: Load to motor inertia ratio F: Bus voltage Note 1: It is for speed control mode. It will be the analog speed limit voltage in the torque control mode. 2: It is for the torque control mode. It will be the analog torque limit voltage in the speed control mode and position control mode. Status display at power-on in corresponding control mode 0: Depends on the control mode 1: Depends on the first digit setting of the parameter	0000h	PC36	Status display selection Status display selection at power-on Refer to the comparison table below for the setting method.	0000h	P S T

Control mode	Status display at power-on
Position	Cumulative feedback pulses
Position/speed	Cumulative feedback pulses/ servo motor speed
Speed	Servo motor speed
Speed/torque	Servo motor speed/ analog torque command voltage
Torque	Analog torque command voltage
Torque/position	Analog torque command voltage/ cumulative feedback pulses

Status display selection comparison table

(1) Status display selection at power-on

MR-J2S-_A_ No.18	→	MR-J4-_A_ PC36	Display definition
0 0 _ 0		0 _ 0 0	Cumulative feedback pulses
0 0 _ 1		0 _ 0 1	Servo motor speed
0 0 _ 2		0 _ 0 2	Droop pulses
0 0 _ 3		0 _ 0 3	Cumulative command pulses
0 0 _ 4		0 _ 0 4	Command pulse frequency
0 0 _ 5		0 _ 0 5	Analog speed command voltage (Note 1)
0 0 _ 6		0 _ 0 6	Analog torque command voltage (Note 2)
0 0 _ 7		0 _ 0 7	Regenerative load ratio
0 0 _ 8		0 _ 0 8	Effective load ratio
0 0 _ 9		0 _ 0 9	Peak load ratio
0 0 _ A		0 _ 0 A	Instantaneous torque
0 0 _ B		0 _ 0 B	Within one-revolution position (1-pulse unit)
0 0 _ C		0 _ 0 C	Within one-revolution position (100-pulse unit)
0 0 _ D		0 _ 0 D	ABS counter
0 0 _ E		0 _ 0 E	Load to motor inertia ratio
0 0 _ F		0 _ 0 F	Bus voltage

Note 1. It is for the speed control mode. It will be the analog speed limit voltage in the torque control mode.

2. It is for the torque control mode. It will be the analog torque limit voltage in the speed control mode and position control mode.

(2) Status display at power-on in each control mode

MR-J2S-_A_ No.18	→	MR-J4-_A_ PC36	Display definition
0 0 0 _		0 0 _ _	Depends on each control mode
0 0 1 _		0 1 _ _	Depends on the second digit of PC36.

MR-J2S-_A_			MR-J4-_A_			Control mode
No.	Name and function	Initial value	No.	Name and function	Initial value	
19	Parameter writing inhibit Used to select the reference range and writing range of parameters.	0000h	PA19	Parameter writing inhibit Used to select the reference range and writing range of parameters by changing a setting value. Use with the initial value as is. (Refer to the table "The setting values of [Pr. PA19] and their accessible parameters".)	00AAh	P S T
20	Function selection 2 Used to select whether to execute a restart after instantaneous power failure, servo-lock when the speed control mode stops, and slight vibration suppression control. 0 _ _ _ Restart after instantaneous power failure selection If the power supply voltage has returned to normal after an undervoltage status caused by the reduction of the input power supply voltage in the speed control mode, the servo motor can be restarted by merely turning on the start signal without resetting the alarm. 0: Disabled (Undervoltage alarm (AL. 10) occurs.) 1: Enabled Servo-lock selection at speed control stop In the speed control mode, the servo motor shaft can be locked to prevent the shaft from being moved by an external force. 0: Enabled (servo-lock) The operation to maintain the stop position is performed. 1: Disabled (no servo-lock) The stop position is not maintained. The control to make the speed 0 r/min is performed. Slight vibration suppression control It will become effective if the auto tuning selection is set as "0400" by parameter No.2. Used to curb vibration at the time of stop. 0: Disabled 1: Enabled	0000h		Restart after instantaneous power failure selection No corresponding parameter		
			PC23	Servo-lock selection at speed control stop Select the servo-lock selection at speed control stop. 0 0 0 _ Servo-lock selection at speed control stop 0: Enabled (servo-lock) The operation to maintain the stop position is performed. 1: Disabled (no servo-lock) The stop position is not maintained. The control to make the speed 0 r/min is performed. Set the same value as for MR-J2S-_A_.	0000h	S
			PB24	Slight vibration suppression control selection Used to select the slight vibration suppression control. 0: Disabled 1: Enabled To enable the slight vibration suppression control, select "Manual mode (_ _ _ 3)" under "Gain adjustment mode selection" in [Pr. PA08]. Slight vibration suppression control cannot be used in the speed control mode. Set the same value as for MR-J2S-_A_.	0000h	P

Table: The setting values of [Pr. PA19] and the accessible parameters

PA19	Permissions	PA	PB	PC	PD	PE	PF	PL
Other than the below	Read	○						
	Write	○						
000Ah	Read	Only 19						
	Write	Only 19						
000Bh	Read	○	○	○				
	Write	○	○	○				
000Ch	Read	○	○	○	○			
	Write	○	○	○	○			
00AAh (initial value)	Read	○	○	○	○	○	○	
	Write	○	○	○	○	○	○	
00ABh	Read	○	○	○	○	○	○	○
	Write	○	○	○	○	○	○	○
100Bh	Read	○						
	Write	Only 19						
100Ch	Read	○	○	○	○			
	Write	Only 19						
10AAh	Read	○	○	○	○	○	○	
	Write	Only 19						
10ABh	Read	○	○	○	○	○	○	○
	Write	Only 19						

<table>
<tr><th colspan="3">MR-J2S-_A_</th><th colspan="3">MR-J4-_A_</th><th rowspan="2">Control mode</th></tr>
<tr><th>No.</th><th>Name and function</th><th>Initial value</th><th>No.</th><th>Name and function</th><th>Initial value</th></tr>
<tr>
<td>21</td>
<td>Function selection 3 (command pulse selection)
Used to select the input form of pulse train input signals.

0 0 _ _
Command pulse input form
0: Forward/reverse rotation pulse train
1: Signed pulse train
2: A/B-phase pulse train
Pulse train logic selection
0: Positive logic
1: Negative logic</td>
<td>0000h</td>
<td>PA13</td>
<td>Command pulse input form

0 _ _ _
Command pulse input form
0: Forward/reverse rotation pulse train
1: Signed pulse train
2: A/B-phase pulse train
Pulse train logic selection
0: Positive logic
1: Negative logic
Command input pulse train filter
Selecting a proper filter suited to the selection command pulse frequency enables enhancement of noise immunity.
0: Command input pulse train is 4 Mpulses/s or less.
1: Command input pulse train is 1 Mpulse/s or less.
2: Command input pulse train is 500 kpulses/s or less.
3: Command input pulse train is 200 kpulses/s or less. (Corresponds to software version A5 or later)
Refer to the comparison table below for the setting method.

Command pulse setting comparison table
<table>
<tr><th>MR-J2S-_A_</th><th></th><th colspan="2">MR-J4-_A_</th></tr>
<tr><th>No.21</th><th></th><th colspan="2">PA13 (Note 1)</th></tr>
<tr><th></th><th></th><th>Differential input</th><th>Open-collector input</th></tr>
<tr><td>0 0 0 0</td><td rowspan="6">→</td><td>0 _ _ 0</td><td>0 _ _ 0 (Note 2)</td></tr>
<tr><td>0 0 0 1</td><td>0 _ 0 1</td><td>0 _ 0 1</td></tr>
<tr><td>0 0 0 2</td><td>0 _ 0 2</td><td>0 _ 0 2</td></tr>
<tr><td>0 0 1 0</td><td>0 _ _ 0</td><td>0 _ _ 0 (Note 2)</td></tr>
<tr><td>0 0 1 1</td><td>0 _ 1 1</td><td>0 _ 1 1</td></tr>
<tr><td>0 0 1 2</td><td>0 _ 1 2</td><td>0 _ 1 2</td></tr>
</table>
Note 1. Make sure to set a pulse train input filter. If it is not set, position mismatch will occur.
2. It is necessary to adjust the command pulse logic to the positioning module. An incorrect logic setting causes the motor to not rotate. Make sure to configure the settings.

Refer to "3.7 Important Points for Replacement (Command Pulse Logic Settings)".</td>
<td>0100h</td>
<td>P</td>
</tr>
</table>

<table>
<tr><th colspan="3">MR-J2S-_A_</th><th colspan="3">MR-J4-_A_</th><th rowspan="2">Control mode</th></tr>
<tr><th>No.</th><th>Name and function</th><th>Initial value</th><th>No.</th><th>Name and function</th><th>Initial value</th></tr>
<tr><td>22</td><td>Function selection 4
Used to select a stop method when LSP (Forward rotation stroke end) and LSN (Reverse rotation stroke end) are turned off, and to select VC/VLA voltage averaging.
0 | | 0 | |
Stop method when LSP (forward rotation stroke end) and LSN (reverse rotation stroke end) are effective
0: Quick stop
1: Slow stop
VC/VLA voltage averaging
This is used to set the filtering time when VC (Analog speed command) or VLA (Analog speed limit) is imported.
Set 0 to vary the speed to voltage fluctuation in real time. Increase the set value to vary the speed slower to voltage fluctuation.
<table><tr><th>Setting value</th><th>Filtering time [ms]</th></tr><tr><td>0</td><td>0</td></tr><tr><td>1</td><td>0.444</td></tr><tr><td>2</td><td>0.888</td></tr><tr><td>3</td><td>1.777</td></tr><tr><td>4</td><td>3.555</td></tr></table></td><td>0000h</td><td>PD30</td><td>Function selection D-1
0 | 0 | 0 | |
Stop method when LSP (Forward rotation stroke end) and LSN (reverse rotation stroke end) are turned OFF
0: Quick stop
1: Slow stop
Set the same value as for MR-J2S-_A_.</td><td>0000h</td><td>P
S</td></tr>
<tr><td></td><td></td><td></td><td>PC23</td><td>Function selection C-2
0 | | 0 | 0
VC/VLA voltage averaging selection
<table><tr><th>Setting value</th><th>Filtering time [ms]</th></tr><tr><td>0</td><td>0</td></tr><tr><td>1</td><td>0.444</td></tr><tr><td>2</td><td>0.888</td></tr><tr><td>3</td><td>1.777</td></tr><tr><td>4</td><td>3.555</td></tr></table>Set the same value as for MR-J2S-_A_.</td><td>0000h</td><td>S
T</td></tr>
<tr><td>23</td><td>Feed forward gain
Set the feed forward gain.
When the setting is 100%, the droop pulses during operation at constant speed are nearly zero. However, sudden acceleration/deceleration will increase the overshoot. As a standard, when setting the feed forward gain as 100%, set 1 s or more as the acceleration/deceleration time constant up to the rated speed.</td><td>0</td><td>PB04</td><td>Feed forward gain
Set the feed forward gain.
Set the same value as for MR-J2S-_A_.</td><td>0</td><td>P</td></tr>
<tr><td>24</td><td>Zero speed
Used to set the output range of ZSP (Zero speed detection).</td><td>50</td><td>PC17</td><td>Zero speed
Used to set the output range of ZSP (Zero speed detection).
Set the same value as for MR-J2S-_A_.</td><td>50</td><td>P
S
T</td></tr>
<tr><td>25</td><td>Analog speed command maximum speed
Used to set the speed at the maximum input voltage (10 V) of VC (Analog speed command).
When "0" is set, the speed will reach the rated speed of the connected servo motor.</td><td>0</td><td>PC12</td><td>Analog speed command - Maximum speed
Set the value according to the following method.
(1) When the setting value of MR-J2S-_A_ [Pr. 25] is "0", set the rated speed of the existing motor.
Example: HC-KFS053 motor → PC12: "3000"
(2) When the setting value of MR-J2S-_A_ [Pr. 25] is a value other than "0", set the same value as for MR-J2S-_A_.</td><td>0</td><td>S</td></tr>
<tr><td></td><td>Analog speed limit - Maximum speed
Used to set the speed at the maximum input voltage (10 V) of VLA (Analog speed limit).
When "0" is set, the speed will reach the rated speed of the connected servo motor.</td><td>0</td><td></td><td>Analog speed limit maximum speed
Set the value in the same way as above.</td><td></td><td>T</td></tr>
</table>

<table>
<tr><th colspan="3">MR-J2S-_A_</th><th colspan="3">MR-J4-_A_</th><th rowspan="2">Control mode</th></tr>
<tr><th>No.</th><th>Name and function</th><th>Initial value</th><th>No.</th><th>Name and function</th><th>Initial value</th></tr>
<tr><td>26</td><td>Analog torque command maximum output
Used to set the output torque at an analog torque command voltage (TC = ±8 V) of +8 V assuming that the maximum torque is 100[%].
For example, when the setting value is 50 and TC = +8 V,
Maximum torque × $\frac{50}{100}$ is output.</td><td>100</td><td>PC13</td><td>Analog torque command maximum output
Set the same value as for MR-J2S-_A_.</td><td>100.0</td><td>T</td></tr>
<tr><td rowspan="2">27</td><td rowspan="2">Encoder output pulses
Used to set the encoder pulses (A-phase and B-phase) output by the servo amplifier. Set the value 4 times greater than the A-phase and B-phase pulses.
[Pr. 54] can be used to choose the output pulse setting or output dividing ratio setting.
The number of A-phase and B-phase pulses actually output is 1/4 times greater than the preset number of pulses.
The maximum output frequency is 1.3 Mpulses/s (after multiplication by 4). Use this parameter within this range.
▪ For output pulse designation
Set [Pr. 54] to "0 _ _ _" (initial value).
Set the number of pulses per servo motor revolution.
Output pulse = setting value [pulse/rev].
For instance, when "5600" is set, the actual output A- and B-phase pulses are as follows.
A-phase/B-phase output pulse = $\frac{5600}{4}$ = 1400 [pulse]
▪ For output division ratio setting
Set [Pr. 54] to "1 _ _ _".
The number of pulses per servo motor revolution is divided by the set value.
Output pulse = $\frac{\text{Resolving power of one rotation of servo motor}}{4}$ [pulse/rev]
For instance, when "8" is set, the actual output A- and B-phase pulses are as follows.
A-phase/B-phase output pulse = $\frac{131072}{8} \times \frac{1}{4}$ = 4096 [pulse]</td><td rowspan="2">4000</td><td>PA15</td><td>Encoder output pulse
Used to set the encoder pulses (A-phase and B-phase) output by the servo amplifier.
Refer to the comparison table below for the setting method.
Encoder output pulse setting comparison table
(1) For primary replacement (Note 1)
<table><tr><th colspan="2">MR-J2S-_A_</th><th rowspan="2">→</th><th colspan="2">MR-J4-_A_</th></tr><tr><th>No.54</th><th>No.27 (Note 2)</th><th>PC19</th><th>PA15 (Note 3)</th></tr><tr><td>1 _ _ _</td><td>N</td><td>0 _ 1 _</td><td>N</td></tr><tr><td>0 _ _ _</td><td>N</td><td>0 _ 0 _</td><td>N</td></tr></table>Note 1. N = J2S setting value.
2. Set the same value as for J2S in MR-J4-_A_ [Pr. PA15].
(2) For secondary/simultaneous replacement (Note 1)
<table><tr><th colspan="2">MR-J2S-_A_</th><th rowspan="2">→</th><th colspan="2">MR-J4-_A</th></tr><tr><th>No.54</th><th>No.27 (Note 2)</th><th>PC19</th><th>PA15</th></tr><tr><td>1 _ _ _</td><td>N</td><td>0 _1 _</td><td>N × 32 (Note 3)</td></tr><tr><td>0 _ _ _</td><td>N</td><td>0 _0 _</td><td>N</td></tr></table>Note 1. For the primary, secondary and simultaneous replacement, refer to "[Appendix 2] Introduction to Renewal Tool".
2. N = J2S setting value.
3. For dividing ratio settings, set a value 32 x the MR-J2S-_A_ setting value for MR-J4-_A_ [Pr. PA15].</td><td>4000</td><td rowspan="2">P
S
T</td></tr>
<tr><td>PC19</td><td>Encoder output pulse selection
Refer to the comparison table above for the setting method.</td><td>0000h</td></tr>
<tr><td rowspan="2">28</td><td rowspan="2">Internal torque limit 1
Set the parameter assuming that the maximum torque is 100 [%]. The parameter is for limiting the torque of the servo motor.
When "0" is set, no torque is generated.
<table><tr><th>(Note) TL</th><th>Torque limit</th></tr><tr><td>0</td><td>Internal torque limit 1 (Parameter No.28)</td></tr><tr><td>1</td><td>Analog torque limit < Internal torque limit 1
: Analog torque limit
Analog torque limit > Internal torque limit 1
: Internal torque limit 1</td></tr></table>Note. 0: OFF
1: ON
When torque is output in analog monitor output, this setting value will be the maximum output voltage (+8 V).</td><td rowspan="2">100</td><td>PA11</td><td>Forward rotation torque limit
You can limit the torque generated by the servo motor.
Set the same value as for MR-J2S-_A_.</td><td>100.0</td><td rowspan="2">P
S
T</td></tr>
<tr><td>PA12</td><td>Reverse rotation torque limit
You can limit the torque generated by the servo motor.
Set the same value as for MR-J2S-_A_.</td><td>100.0</td></tr>
</table>

MR-J2S-_A_			MR-J4-_A_			Control mode
No.	Name and function	Initial value	No.	Name and function	Initial value	
29	Analog speed command offset Used to set the offset voltage of VC (Analog speed command). For example, if switching on ST1 (forward rotation start) with 0 V applied to VC causes CCW rotation, set a negative value. When VC automatic offset is used, the automatically offset value is set to this parameter. The initial value is provided before shipment by the VC automatic offset function on condition that the voltage between VC and LG is 0 V. Setting range: -999 to 999 mV	Differs depending on the servo amplifier.	PC37	Analog speed command offset Used to set the offset voltage of VC (Analog speed command). The initial value is provided before shipment by the VC automatic offset function on condition that the voltage between VC and LG is 0 V. For example, when the motor rotates by switching on ST1 (forward rotation start) with 0 V applied to VC, set an offset voltage. Setting range: -9999 to 9999 mV	Differs depending on the servo amplifier.	S
	Analog speed limit offset Used to set the offset voltage of VLA (Analog speed limit). For example, if switching on RS1 (forward rotation selection) with 0 V applied to VLA causes CCW rotation, set a negative value. When VC automatic offset is used, the automatically offset value is set to this parameter. The initial value is provided before shipment by the VC automatic offset function on condition that the voltage between VLA and LG is 0 V. Setting range: -999 to 999 mV			Analog speed limit offset Used to set the offset voltage of VLA (Analog speed limit). The initial value is provided before shipment by the VC automatic offset function on condition that the voltage between VC and LG is 0 V. When the motor rotates by switching on RS1 (Forward rotation selection) with 0 V applied to VLA, set an offset voltage. Setting range: -9999 to 9999 mV		T
30	Analog torque command offset Used to set the offset voltage of TC (Analog torque command). Setting range: -999 to 999 mV	0	PC38	Analog torque command offset Used to set the offset voltage of TC (Analog torque command). Setting range: -9999 to 9999 mV	0	T
	Analog torque limit offset Used to set the offset voltage of TLA (Analog torque limit). Setting range: -999 to 999 mV			Analog torque limit offset Used to set the offset voltage of TLA (Analog torque limit). Setting range: -9999 to 9999 mV		S
31	Analog monitor 1 offset Used to set the offset voltage of Analog monitor 1 (MO1). Setting range: -999 to 999 mV	0	PC39	Analog monitor 1 offset Used to set the offset voltage of MO1 (Analog monitor 1). Setting range: -9999 to 9999 mV	0	P S T
32	Analog monitor 2 offset Used to set the offset voltage of Analog monitor 2 (MO2). Setting range: -999 to 999 mV	0	PC40	Analog monitor 2 offset Used to set the offset voltage of MO2 (Analog monitor 2). Setting range: -9999 to 9999 mV	0	P S T
33	Electromagnetic brake sequence output Used to set the delay time (Tb) between MBR (Electromagnetic brake interlock) OFF and base circuit shut-off. Setting range: 0 to 1000 ms	100	PC16	Electromagnetic brake sequence output Used to set the delay time (Tb) between MBR (Electromagnetic brake interlock) OFF and base circuit shut-off. Setting range: 0 to 1000 ms Set the same value as for MR-J2S-_A_.	0	P S T
34	Load to motor inertia ratio Used to set the motor inertia ratio to the servo motor shaft inertia moment. When auto tuning mode 1 or interpolation mode is selected, the result of auto tuning is automatically used. In this case, the value varies between 0 and 1000. Setting range: 0 to 3000; Unit: x0.1	70	PB06	Load to motor inertia ratio When auto tuning mode 1 is selected, the auto tuning result is automatically used. Setting range: 0.00 to 300.00; Unit: x1.0 Note that the setting unit is different from that for MR-J2S-_A_. When setting a value manually, set a value 0.1 x the MR-J2S-_A_ setting value.	7.00	P S

MR-J2S-_A_			MR-J4-_A_			Control mode
No.	Name and function	Initial value	No.	Name and function	Initial value	
35	Position loop gain 2 Used to set the gain of the position loop. Set this parameter to increase the position response to level load disturbance. Higher setting increases the response level but is liable to generate vibration and/or noise. When auto tuning mode 1 or 2, manual mode 1, and interpolation mode are selected, the auto tuning result is automatically used.	7 kW or less: 35 11 kW or more: 19	PB08	Position loop gain Used to set the gain of the position loop. When auto tuning mode 1 is selected, the auto tuning result is automatically used.	37.0	P
36	Speed loop gain 1 Normally, it is unnecessary to change this parameter. Higher setting increases the response level but is liable to generate vibration and/or noise. When auto tuning mode 1 or 2 and manual mode 1 are selected, the auto tuning result is automatically used.	7 kW or less: 177 11 kW or more: 96		No corresponding parameter This parameter is automatically set by the servo amplifier.		P S
37	Speed loop gain 2 Set this parameter when vibration occurs on machines of low rigidity or large backlash. Higher setting increases the response level but is liable to generate vibration and/or noise. When auto tuning mode 1 or 2 and interpolation mode are selected, the auto tuning result is automatically used.	7 kW or less: 817 11 kW or more: 455	PB09	Speed loop gain Used to set the gain of the speed loop. When auto tuning mode 1 is selected, the auto tuning result is automatically used.	823	P S
38	Speed integral compensation. Used to set the integral time constant of the speed loop. Decreasing the setting value will increase the response level, but vibration and noise are generated more easily. When auto tuning mode 1 or 2 and interpolation mode are selected, the auto tuning result is automatically used.	48	PB10	Speed integral compensation Used to set the integral time constant of the speed loop. When auto tuning mode 1 is selected, the auto tuning result is automatically used.	33.7	P S
39	Speed differential compensation Used to set the differential compensation. To enable the setting value, turn on PC (proportional control). Setting range: 0 to 1000	980	PB11	Speed differential compensation Used to set the differential compensation. To enable the setting value, turn on PC (proportional control). Setting range: 0 to 1000 Set the same value as for MR-J2S-_A_.	980	P S

<table>
<tr><th colspan="3">MR-J2S-_A_</th><th colspan="3">MR-J4-_A_</th><th rowspan="2">Control mode</th></tr>
<tr><th>No.</th><th>Name and function</th><th>Initial value</th><th>No.</th><th>Name and function</th><th>Initial value</th></tr>
<tr><td>41</td><td>Input signal automatic ON selection
Used to set SON (servo-on), LSP (forward rotation stroke end), and LSN (reverse rotation stroke end) automatic ON.
0 [ ][ ][ ]
SON (Servo-on) input
0: ON/OFF by external input
1: Automatic ON in servo amplifier (External wiring is unnecessary)
LSP input selection (forward rotation stroke end)
0: ON/OFF by external input
1: Automatic ON in servo amplifier (External wiring is unnecessary)
LSN input selection (reverse rotation stroke end)
0: ON/OFF by external input
1: Automatic ON in servo amplifier (External wiring is unnecessary)</td><td>0000h</td><td>PD01</td><td>Input signal automatic on selection 1
Used to set input devices to be turned on automatically.
Refer to the comparison table below for the setting method.
Input signal automatic ON setting comparison table
MR-J2S-_A_ No.41 → MR-J4-_A_ PD01
0000 → 0000
0001 → 0004
0010 → 0400
0011 → 0404
0100 → 0800
0101 → 0804
0110 → 0C00
0111 → 0C04</td><td>0000h</td><td>P
S
T

P
S</td></tr>
<tr><td>42</td><td>Input signal selection 1
Assign the input pins for the control mode switching signals and set CR (clear).
0 0 [ ][ ]
Input pin allocation of LOP (control change)
Set the input connector pin for the control method change signal. However, it is effective if selection of Position/Speed, Speed/Torque, and Torque/Position is made in parameter No.0.
Setting value / Connector pin No.
0 / CN1B-5
1 / CN1B-14
2 / CN1A-8
3 / CN1B-7
4 / CN1B-8
5 / CN1B-9
CR (Clear) selection
0: Deleting droop pulses by turning on the device
1: Always deleting droop pulses during turning ON of the device</td><td>0003h</td><td></td><td>Input signal selection 1
Assign the input pins for the control mode switching signals and set CR (clear).
Refer to the comparison table below for the setting method.</td><td></td><td></td></tr>
</table>

Input signal selection 1 setting comparison table

<table>
<tr><th colspan="2">MR-J2S-_A_</th><th colspan="6">MR-J4-_A_</th></tr>
<tr><th rowspan="2">No.42</th><th rowspan="2">Target pin</th><th>CR selection</th><th colspan="5">LOP assignment</th></tr>
<tr><th>PD32</th><th>Target pin</th><th colspan="2">Target parameter</th><th colspan="2">Target parameter</th></tr>
<tr><th></th><th></th><th></th><th>No.</th><th>Setting value</th><th>No.</th><th>Setting value</th></tr>
<tr><td>0000</td><td>CN1B-5</td><td rowspan="6">0000</td><td>CN1-15</td><td>PD03</td><td rowspan="6">2323</td><td>PD04</td><td rowspan="6">0023</td></tr>
<tr><td>0001</td><td>CN1B-14</td><td>CN1-19</td><td>PD11</td><td>PD12</td></tr>
<tr><td>0002</td><td>CN1A-8</td><td>CN1-41</td><td>PD13</td><td>PD14</td></tr>
<tr><td>0003</td><td>CN1B-7</td><td>CN1-16</td><td>PD05</td><td>PD06</td></tr>
<tr><td>0004</td><td>CN1B-8</td><td>CN1-17</td><td>PD07</td><td>PD08</td></tr>
<tr><td>0005</td><td>CN1B-9</td><td>CN1-18</td><td>PD09</td><td>PD10</td></tr>
<tr><td>0010</td><td>CN1B-5</td><td rowspan="6">0001</td><td>CN1-15</td><td>PD03</td><td rowspan="6">2323</td><td>PD04</td><td rowspan="6">0023</td></tr>
<tr><td>0011</td><td>CN1B-14</td><td>CN1-19</td><td>PD11</td><td>PD12</td></tr>
<tr><td>0012</td><td>CN1A-8</td><td>CN1-41</td><td>PD13</td><td>PD14</td></tr>
<tr><td>0013</td><td>CN1B-7</td><td>CN1-16</td><td>PD05</td><td>PD06</td></tr>
<tr><td>0014</td><td>CN1B-8</td><td>CN1-17</td><td>PD07</td><td>PD08</td></tr>
<tr><td>0015</td><td>CN1B-9</td><td>CN1-18</td><td>PD09</td><td>PD10</td></tr>
</table>

<table>
<tr><th colspan="3">MR-J2S-_A_</th><th colspan="3">MR-J4-_A_</th><th rowspan="2">Control mode</th></tr>
<tr><th>No.</th><th>Name and function</th><th>Initial value</th><th>No.</th><th>Name and function</th><th>Initial value</th></tr>
<tr>
<td>43</td>
<td>Input signal selection 2 (CN1B-5)
When LOP (control switching) is assigned to pin CN1B-5 by [Pr. 42], this parameter cannot be used.
Any input signal can be assigned to pin CN1B-5.
Note that the number of digits of a setting value and the signals that can be assigned differ depending on the control mode.
 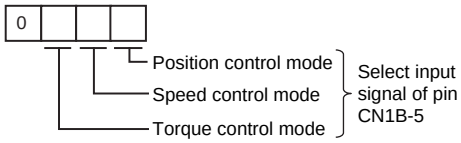

Signals that can be assigned in each control mode are shown in the table below with abbreviations. Even if other signals are set, they are ineffective.
<table>
<tr><th rowspan="2">Setting value</th><th colspan="3">(Note) Control mode</th></tr>
<tr><th>P</th><th>S</th><th>T</th></tr>
<tr><td>0</td><td></td><td></td><td></td></tr>
<tr><td>1</td><td>SON</td><td>SON</td><td>SON</td></tr>
<tr><td>2</td><td>RES</td><td>RES</td><td>RES</td></tr>
<tr><td>3</td><td>PC</td><td>PC</td><td></td></tr>
<tr><td>4</td><td>TL</td><td>TL</td><td></td></tr>
<tr><td>5</td><td>CR</td><td>CR</td><td>CR</td></tr>
<tr><td>6</td><td></td><td>SP1</td><td>SP1</td></tr>
<tr><td>7</td><td></td><td>SP2</td><td>SP2</td></tr>
<tr><td>8</td><td></td><td>ST1</td><td>RS2</td></tr>
<tr><td>9</td><td></td><td>ST2</td><td>RS1</td></tr>
<tr><td>A</td><td></td><td>SP3</td><td>SP3</td></tr>
<tr><td>B</td><td>CM1</td><td></td><td></td></tr>
<tr><td>C</td><td>CM2</td><td></td><td></td></tr>
<tr><td>D</td><td>TL1</td><td>TL1</td><td>TL1</td></tr>
<tr><td>E</td><td>CDP</td><td>CDP</td><td>CDP</td></tr>
</table>
Note. P: Position control mode
S: Speed control mode
T: Torque control mode</td>
<td>0111h</td>
<td>PD03</td>
<td>Input device selection 1L
Any input device can be assigned to pin CN1-15.
(Position control mode and speed control mode)
 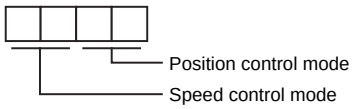

Set an input device compatible with the MR-J2S-_A_ settings.
For details on input devices, refer to the comparison table below.</td>
<td>0202h</td>
<td rowspan="2">P
S
T</td>
</tr>
<tr>
<td></td>
<td></td>
<td></td>
<td>PD04</td>
<td>Input device selection 1H
Any input device can be assigned to pin CN1-15.
(Torque control mode)
 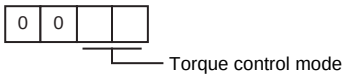

Set an input device compatible with the MR-J2S-_A_ settings.
For details on input devices, refer to the comparison table below.
Input device comparison table
<table>
<tr><th colspan="2">MR-J2S-_A_</th></tr>
<tr><th>Setting value</th><th>Signal name</th></tr>
<tr><td>1</td><td>SON</td></tr>
<tr><td>2</td><td>RES</td></tr>
<tr><td>3</td><td>PC</td></tr>
<tr><td>4</td><td>TL</td></tr>
<tr><td>5</td><td>CR</td></tr>
<tr><td>6</td><td>SP1</td></tr>
<tr><td>7</td><td>SP2</td></tr>
<tr><td>8</td><td>ST1/RS2</td></tr>
<tr><td>9</td><td>ST2/RS1</td></tr>
<tr><td>A</td><td>SP3</td></tr>
<tr><td>B</td><td>CM1</td></tr>
<tr><td>C</td><td>CM2</td></tr>
<tr><td>D</td><td>TL1</td></tr>
<tr><td>E</td><td>CDP</td></tr>
</table>
→
<table>
<tr><th colspan="2">MR-J4-_A_</th></tr>
<tr><th>Setting value</th><th>Signal name</th></tr>
<tr><td>0 2</td><td>SON</td></tr>
<tr><td>0 3</td><td>RES</td></tr>
<tr><td>0 4</td><td>PC</td></tr>
<tr><td>0 5</td><td>TL</td></tr>
<tr><td>0 6</td><td>CR</td></tr>
<tr><td>2 0</td><td>SP1</td></tr>
<tr><td>2 1</td><td>SP2</td></tr>
<tr><td>0 7</td><td>ST1/RS2</td></tr>
<tr><td>0 8</td><td>ST2/RS1</td></tr>
<tr><td>2 2</td><td>SP3</td></tr>
<tr><td>2 4</td><td>CM1</td></tr>
<tr><td>2 5</td><td>CM2</td></tr>
<tr><td>0 9</td><td>TL1</td></tr>
<tr><td>0 D</td><td>CDP</td></tr>
</table></td>
<td>0002h</td>
</tr>
<tr>
<td>44</td>
<td>Input signal selection 3 (CN1B-14)
Any input signal can be assigned to pin CN1B-14.
Signals that can be assigned and the method of assigning them are the same as for input signal selection 2 ([Pr. 43]).
When LOP (control switching) is assigned to pin CN1B-14 by [Pr. 42], this parameter cannot be used.</td>
<td>0222h</td>
<td>PD11</td>
<td>Input device selection 5L
Any input device can be assigned to pin CN1-19.
(Position control mode and speed control mode)
Devices that can be assigned and the method of assigning them are the same as shown in [Pr. PD03] and [Pr. PD04] above.</td>
<td>0303h</td>
<td rowspan="2">P
S
T</td>
</tr>
<tr>
<td></td>
<td></td>
<td></td>
<td>PD12</td>
<td>Input device selection 5H
Any input device can be assigned to pin CN1-19.
(Torque control mode)
Devices that can be assigned and the method of assigning them are the same as shown in [Pr. PD03] and [Pr. PD04] above.</td>
<td>0003h</td>
</tr>
</table>

MR-J2S-_A_			MR-J4-_A_			Control mode
No.	Name and function	Initial value	No.	Name and function	Initial value	
45	Input signal selection 4 (CN1A-8) Any input signal can be assigned to pin CN1A-8. Signals that can be assigned and the method of assigning them are the same as for input signal selection 2 ([Pr. 43]). When LOP (control switching) is assigned to pin CN1A-8 by [Pr. 42], this parameter cannot be used.	0665h	PD13	Input device selection 6L Any input device can be assigned to pin CN1-41. (Position control mode and speed control mode) Devices that can be assigned and the method of assigning them are the same as shown in [Pr. PD03] and [Pr. PD04].	2006h	P S T
			PD14	Input device selection 6H Any input device can be assigned to pin CN1-41. (Torque control mode) Devices that can be assigned and the method of assigning them are the same as shown in [Pr. PD03] and [Pr. PD04].	0020h	
46	Input signal selection 5 (CN1B-7) Any input signal can be assigned to pin CN1B-7. Signals that can be assigned and the method of assigning them are the same as for input signal selection 2 ([Pr. 43]). When LOP (control switching) is assigned to pin CN1B-7 by [Pr. 42], this parameter cannot be used.	0770h	PD05	Input device selection 2L Any input device can be assigned to pin CN1-16. (Position control mode and speed control mode) Devices that can be assigned and the method of assigning them are the same as shown in [Pr. PD03] and [Pr. PD04].	2100h	P S T
			PD06	Input device selection 2H Any input device can be assigned to pin CN1-16. (Torque control mode) Devices that can be assigned and the method of assigning them are the same as shown in [Pr. PD03] and [Pr. PD04] .	0021h	
47	Input signal selection 6 (CN1B-8) Any input signal can be assigned to pin CN1B-8. Signals that can be assigned and the method of assigning them are the same as for input signal selection 2 ([Pr. 43]). When LOP (control switching) is assigned to pin CN1B-8 by [Pr. 42], this parameter cannot be used. When "Use absolute position detection system" is selected in [Pr. 1], pin CN1B-8 becomes ABSM (ABS transfer mode).	0883h	PD07	Input device selection 3L Any input device can be assigned to pin CN1-17. (Position control mode and speed control mode) Devices that can be assigned and the method of assigning them are the same as shown in [Pr. PD03] and [Pr. PD04].	0704h	P S T
			PD08	Input device selection 3H Any input device can be assigned to pin CN1-17. (Torque control mode) Devices that can be assigned and the method of assigning them are the same as shown in [Pr. PD03] and [Pr. PD04].	0007h	
48	Input signal selection 7 (CN1B-9) Any input signal can be assigned to pin CN1B-9. Signals that can be assigned and the method of assigning them are the same as for input signal selection 2 ([Pr. 43]). When LOP (control switching) is assigned to pin CN1B-9 by [Pr. 42], this parameter cannot be used. When "Use absolute position detection system" is selected in [Pr. 1], pin CN1B-9 becomes ABSR (ABS request).	0994h	PD09	Input device selection 4L Any input device can be assigned to pin CN1-18. (Position control mode and speed control mode) Devices that can be assigned and the method of assigning them are the same as shown in [Pr. PD03] and [Pr. PD04].	0805h	P S T
			PD10	Input device selection 4H Any input device can be assigned to pin CN1-18. (Torque control mode) Devices that can be assigned and the method of assigning them are the same as shown in [Pr. PD03] and [Pr. PD04].	0008h	

MR-J2S-_A_			MR-J4-_A_			Control mode
No.	Name and function	Initial value	No.	Name and function	Initial value	
49	Output signal selection 1 Used to select the connector pins for outputting an alarm code, WNG (warning), and BWNG (battery warning).	0000h	PD34	Alarm code output This is used to select if output alarm codes. Alarm codes are outputted to pins CN1-22, CN1-23, and CN1-24. 0: Disabled 1: Enabled [AL. 37 parameter error] occurs when "_ _ _ 1" is set in [Pr. PA03] and absolute position detection system by DIO is selected while MBR (electromagnetic brake interlock) or ALM (malfunction) is selected for pins CN1-22, CN1-23, or CN1-24 with alarm code output selected. For details about alarm code combinations, refer to "MR-J4-_A(-RJ) Servo Amplifier Instruction Manual, Chapter 8: Troubleshooting".		P S T
				WNG (warning) / BWNG (battery warning) output device setting. Used to select the connector pin for outputting WNG (warning) and BWNG (battery warning). Refer to the comparison table below for the setting method.		

0			

Alarm code output setting
The alarm code output setting and the following function cannot be used at the same time.
If set, a parameter error alarm (AL.37) is generated.
- Absolute position detection system
- Signal allotment function of MBR (electromagnetic brake interlock) to pin CN1B-19

Setting value	Connector pin details		
	CN1B-19	CN1A-18	CN1A-19
0	ZSP	INP or SA	RD
1	Outputs the alarm code when an alarm code is generated		

(Note) Alarm code			Alarm display	Name
CN1B 19 pin	CN1A 18 pin	CN1A 19 pin		
0	0	0	88888	Watchdog
			AL.12	Memory error 1
			AL.13	Clock error
			AL.15	Memory error 2
			AL.17	Board error
			AL.19	Memory error 3
			AL.37	Parameter error
			AL.8A	Serial communication time-out fault
			AL.8E	Serial communication fault
0	0	1	AL.30	Regenerative error
			AL.33	Overvoltage
0	1	0	AL.10	Undervoltage
0	1	1	AL.45	Main circuit device overheat
			AL.46	Servo motor overheat
			AL.50	Overload 1
			AL.51	Overload 2
1	0	0	AL.24	Main circuit error
			AL.32	Overcurrent
1	0	1	AL.31	Overspeed
			AL.35	Command pulse frequency error
			AL.52	Error excessive
1	1	0	AL.16	Encoder error 1
			AL.1A	Motor combination error
			AL.20	Encoder error 2
			AL.25	Absolute position erased

Note. 0: OFF
1: ON

Setting of WNG (warning) output
Select a connector pin to output the warning.
The signal before selection becomes unusable. If the same connector pin as in the third digit is selected, a parameter error (AL.37) will be generated.

Setting value	Connector pin No.
0	Not output
1	CN1A-19
2	CN1B-18
3	CN1A-18
4	CN1B-19
5	CN1B-6

BWNG (battery warning) output setting
Select a connector pin to output the battery warning.
The signal before selection becomes unusable.
The setup contents are the same as in the second digit of this parameter. If the same connector pin as the second digit is selected, a parameter error (AL.37) will be generated.

Output device selection setting comparison table

(1) WNG (warning) output

MR-J2S-_A_			MR-J4-_A_		
No.49	Target pin		Target pin	Target parameter	Setting value
0 _ 0 _	Not output				
0 _ 1 _	CN1A-19		CN1-49	PD28	0 0 0 8h
0 _ 2 _	CN1B-18	→	No corresponding parameter		
0 _ 3 _	CN1A-18		CN1-24	PD25	0 0 0 8h
0 _ 4 _	CN1B-19		CN1-23	PD24	0 0 0 8h
0 _ 5 _	CN1B-6		CN1-25	PD26	0 0 0 8h

(2) BWNG (Battery warning)

MR-J2S-_A_			MR-J4-_A_		
No.49	Target pin		Target pin	Target parameter	Setting value
0 0 _ _	Not output				
0 1 _ _	CN1A-19		CN1-49	PD28	0 0 0 9h
0 2 _ _	CN1B-18	→	No corresponding parameter		
0 3 _ _	CN1A-18		CN1-24	PD25	0 0 0 9h
0 4 _ _	CN1B-19		CN1-23	PD24	0 0 0 9h
0 5 _ _	CN1B-6		CN1-25	PD26	0 0 0 9h

MR-J2S-_A_			MR-J4-_A_			Control mode
No.	Name and function	Initial value	No.	Name and function	Initial value	
51	Function selection 6 Used to select the operation method when RES (Reset) is ON. This parameter is disabled (base circuit shut-off) by the absolute position detection system. 0 ☐ 0 0 Action when RES (reset) is turned ON 0: Base circuit shut-off 1: No base circuit shut-off	0000h	PD30	Function selection D-1 Used to select the base circuit status when RES (Reset) is ON. 0 0 ☐ 0 Action when RES (reset) is turned ON 0: Base circuit shut-off 1: No base circuit shut-off Set the same value as for MR-J2S-_A_.	0000h	P S T
53	Function selection 8 Used to select the serial communication protocol. 0 ☐ ☐ 0 Protocol checksum selection 0: Yes (Add checksum) 1: No (Do not add checksum) Protocol station number selection 0: With station numbers 1: No station numbers	0000h		No corresponding parameter Note: MR-J4-_A_ Protocol station No. selection: Supported Protocol check selection: Supported		

MR-J2S-_A_			MR-J4-_A_			Control mode
No.	Name and function	Initial value	No.	Name and function	Initial value	
54	Function selection 9 Used to select the command pulse rotation direction, encoder output pulse direction, and encoder pulse output setting. [ ][ ][0][ ] Changes in servo motor rotation direction Changes the servo motor rotation direction relative to the input pulse Setting value: 0 — CCW (When forward rotation pulse is input), CW (When reverse rotation pulse is input); 1 — CW, CCW Changes in encoder pulse output phase Change the positions of the pulse output A-phase and B-phase of the encoder. Setting value 0: A phase / B phase; Setting value 1: A phase / B phase Encoder output pulse setting selection (Refer to parameter No. 27) 0: Output pulse specification 1: Division ratio setting	0000h	PA14	Select servo motor rotation direction relative to the input pulse train. Setting value: 0 — CCW (When forward rotation pulse is input), CW (When reverse rotation pulse is input); 1 — CW, CCW Set the same value as for MR-J2S-_A_.	0	P
			PC19	Encoder output pulse selection [0][0][ ][ ] Changes in encoder pulse output phase Change the positions of the pulse output A-phase and B-phase of the encoder. Setting value 0: A phase / B phase; Setting value 1: A phase / B phase Encoder output pulse setting selection Set the same value as for MR-J2S-_A_.	0000h	P S T
55	Function selection A Used to select the control method of the position command acceleration/deceleration time constant ([Pr. 7]). [0][0][ ][0] Position command acceleration/deceleration time constant control 0: Primary delay 1: Linear acceleration/deceleration	0000h	PB25	Function selection B-1 Used to select the position command acceleration/deceleration filter type. [0][0][ ][0] Position command acceleration/deceleration filter type 0: Primary delay 1: Linear acceleration/deceleration When you select "Linear acceleration/deceleration", do not switch the control mode. When the control mode is switched, the servo motor stops suddenly. Set the same value as for MR-J2S-_A_.	0000h	P
56	Serial communication time-out selection Used to set the time-out time of the communication protocol in units of [s]. When "0" is set, Time-out check is not carried out.	0		No corresponding parameter Note: MR-J4-_A_ Time-out check is carried out.		

MR-J2S-_A_			MR-J4-_A_			Control mode
No.	Name and function	Initial value	No.	Name and function	Initial value	
58	Machine resonance suppression filter 1 Select the machine resonance suppression filter.	0000h	PB01	Adaptive tuning mode (adaptive filter II) Used to set the adaptive filter tuning. Select the adjustment mode of machine resonance suppression filter 1.	0000h	P S T

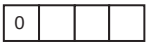

Notch frequency selection
Set "00" when the active vibration suppression control is set as "effective" or "maintain" ([Pr. 60]: "_ 1 _ _" or "_ 2 _ _").

Setting value	Frequency	Setting value	Frequency	Setting value	Frequency	Setting value	Frequency
00	Disabled	08	562.5	10	281.3	18	187.5
01	4500	09	500	11	264.7	19	180
02	2250	0A	450	12	250	1A	173.1
03	1500	0B	409.1	13	236.8	1B	166.7
04	1125	0C	375	14	225	1C	160.1
05	900	0D	346.2	15	214.3	1D	155.2
06	750	0E	321.4	16	204.5	1E	150
07	642.9	0F	300	17	195.7	1F	145.2

Notch depth selection

Setting value	Response	Gain
0	Deep	-40dB
1	to	-14dB
2		-8dB
3	Shallow	-4dB

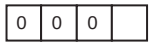

Filter tuning mode selection
0: Disabled
1: Automatic setting
(Do not automatically set the torque control.)
2: Manual setting

Refer to the comparison table below for the setting method.

Setting comparison table for machine resonance suppression filter 1

MR-J2S-_A_			MR-J4-_A_		
No.58	No.60		PB01	PB13	PB14
0 _ 0 0	_ 0 _ _		0 0 0 0	Setting not required	
0 _ 0 1 to 0 _ 1 F	_ 0 _ _	→	0 0 0 2	Set a value according to MR-J2S. (Note)	0 0 _ 0 (Note)
0 _ _ _	0 0 1 _		0 0 0 1	Automatic setting	
0 _ _ _	0 0 2 _		0 0 0 1	Automatic setting	

Note Set a frequency and notch depth according to the values of MR-J2S-_A_.
Set the notch width to "0: α = 2".
For details, refer to [Pr. PB13] and [Pr. PB14] shown below.

PB13	Machine resonance suppression filter 1 Used to set the notch frequency of machine resonance suppression filter 1. When "Automatic setting (_ _ _ 1)" is selected in "Filter tuning mode selection" of [Pr. PB01], the adjustment result is reflected. When "Manual setting (_ _ _ 2)" is selected in "Filter tuning mode selection" of [Pr. PB01], this setting value is enabled. Setting range: 10 to 4500 Set a value according to the setting frequency of MR-J2S-_A_.	4500
PB14	Used to set the shape of the machine resonance suppression filter 1. When "Automatic setting (_ _ _ 1)" is selected in "Filter tuning mode selection" of [Pr. PB01], the adjustment result is reflected. Set manually for the manual setting.	0000h

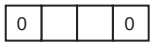

Notch depth selection
0: -40dB
1: -14dB
2: -8dB
3: -4dB

Notch width selection
0: α=2
1: α=3
2: α=4
3: α=5

Set the notch depth according to the setting of MR-J2S-_A_.
Set the notch width to "0: α = 2".

<table>
<tr><th colspan="3">MR-J2S-_A_</th><th colspan="3">MR-J4-_A_</th><th rowspan="2">Control mode</th></tr>
<tr><th>No.</th><th>Name and function</th><th>Initial value</th><th>No.</th><th>Name and function</th><th>Initial value</th></tr>
<tr><td>59</td><td>Machine resonance suppression filter 2
Used to set the machine resonance suppression filter.
0 ☐ ☐ ☐
Notch frequency
Same setting as parameter No. 58
However, it is not required to set "00" when the active vibration suppression control is set as "effective" or "maintain".
Notch depth
Same setting as parameter No. 58</td><td>0000h</td><td>PB16</td><td>Used to set the shape of the machine resonance suppression filter 2.
0 ☐ ☐ ☐
Machine resonance suppression filter 2 selection
0: Disabled
1: Available
Notch depth selection
0: -40dB
1: -14dB
2: -8dB
3: -4dB
Notch width selection
0: α=2
1: α=3
2: α=4
3: α=5
Refer to the comparison table below for the setting method.
Setting comparison table for machine resonance suppression filter 2
<table><tr><th>MR-J2S-_A_</th><th></th><th colspan="2">MR-J4-_A_</th></tr><tr><th>No. 59</th><th></th><th>PB16</th><th>PB15</th></tr><tr><td>0 _ 0 0</td><td rowspan="2">→</td><td>0 0 0 0</td><td>Setting not required</td></tr><tr><td>0 _ 0 1
to
0 _ 1 F</td><td>0 0 _ 1
(Note 1)</td><td>Set a value according to J2S.
(Note 2)</td></tr></table>
Note 1. Set the notch depth according to MR-J2S-_A_. Set the notch width to “0: α = 2”.
2. Set a value while referring to [Pr. PB15].</td><td>0000h</td><td rowspan="2">P
S
T</td></tr>
<tr><td></td><td></td><td></td><td>PB15</td><td>Machine resonance suppression filter 1
Used to set the notch frequency of machine resonance suppression filter 1.
When "Enabled (_ _ _ 1)" in "Machine resonance suppression filter 2 selection" of [Pr. PB16] is selected, this parameter is enabled.
Setting range: 10 to 4500
Set a value according to the setting of MR-J2S-_A_.</td><td>4500</td></tr>
</table>

MR-J2S-_A_			MR-J4-_A_			Control mode
No.	Name and function	Initial value	No.	Name and function	Initial value	
60	Low-pass filter/adaptive vibration suppression control Select the low-pass filter/adaptive vibration suppression control. [ ][ ][ ][0] Low-pass filter selection 0: Available (Automatic adjustment) 1: Disabled When available is selected, the filter in the zone expressed by the following formula is automatically set. For 1 kW or less $\frac{\text{VG2 setting value} \times 10}{2\pi \times (1 + \text{GD2 setting value} \times 0.1)}$ [Hz] For 2 kW or less $\frac{\text{VG2 setting value} \times 5}{2\pi \times (1 + \text{GD2 setting value} \times 0.1)}$ [Hz] Adaptive vibration suppression control selection If "available" or "maintained" is selected in the adaptive vibration suppression control selection, machine resonance control filter 1 ([Pr. 58]) will become ineffective. 0: Disabled 1: Enabled Usually, machine resonance frequency is detected, and a filter corresponding to the resonance is generated to control the machine vibration. 2: Maintenance Until then, detection of machine resonance is stopped by keeping the characteristics of the filter generated until that moment. Adaptive vibration suppression control selection Select Adaptive vibration suppression control. 0: Normal 1: High sensitive	0000h	PB23	Low-pass filter selection [0][0][ ][0] Low-pass filter 0: Automatic setting 1: Manual setting 2: Disabled Set "0000 (automatic setting)".	0000h	P S
			PB18	Low-pass filter setting One of the following statuses is applied, depending on how [Pr. PB23] is set. PB23 — PB18 _ _ 0 _ (Initial value) — Automatic setting _ _ 1 _ — Setting value enabled _ _ 2 _ — Setting value disabled Nothing needs to be set due to automatic setting.	3141	P S
			PB01	Adaptive tuning mode (adaptive filter II) [0][0][0][ ] Adaptive filter tuning 0: Disabled 1: Automatic setting (Do not use this in the torque control mode.) 2: Manual setting	0000h	P S T
61	Load to motor inertia ratio 2 Used to set the load to motor inertia ratio when gain switching is enabled. Setting range: 0 to 3000; Unit: x 0.1	70	PB29	Gain switching load to motor inertia ratio Used to set the load to motor inertia ratio when gain switching is enabled. This parameter is enabled only when "Manual mode (_ _ _ 3)" is selected in "Gain adjustment mode selection" of [Pr. PA08]. Setting range: 0.00 to 300.00; Unit: x 1.0 Note that the setting unit is different from that for MR-J2S-_A_. When setting a value, set a value 0.1 x the MR-J2S-_A_ setting value.	7.00	P S

MR-J2S-_A_			MR-J4-_A_			Control mode
No.	Name and function	Initial value	No.	Name and function	Initial value	
62	Position loop gain 2 changing ratio Used to set the changing ratio for position loop gain 2 when the gain switching is enabled. This parameter is enabled when auto tuning is disabled. Setting range: 10 to 200	100	PB30	Gain switching position loop gain When a value smaller than 1.0 rad/s is set, the value will be the same as the setting value of [Pr. PB08]. This parameter is enabled only when "Manual mode (_ _ _ 3)" is selected in "Gain adjustment mode selection" of [Pr. PA08]. Setting range: 0.0 to 2000.0 Because the setting unit is different from that for MR-J2S-_A_, calculate the setting value using the equation below and set it. [Pr. PB30] = [Pr. PB08] × MR-J2S-_A_ [Pr. 62]/100	0.0	P
63	Speed loop gain 2 changing ratio Used to set the changing ratio for speed loop gain 2 when the gain switching is enabled. This parameter is enabled when auto tuning is disabled. Setting range: 10 to 200	100	PB31	Gain switching speed loop gain When a value smaller than 20 rad/s is set, the value will be the same as the setting value of [Pr. PB09]. This parameter is enabled only when "Manual mode (_ _ _ 3)" is selected in "Gain adjustment mode selection" of [Pr. PA08]. Setting range: 0 to 65535 Because the setting unit is different from that for MR-J2S-_A_, calculate the setting value using the equation below and set it. [Pr. PB31] = [Pr. PB09] × MR-J2S-_A_ [Pr. 63]/100	0	P S
64	Speed integral compensation changing ratio Used to set the changing ratio for speed integral compensation when the gain switching is enabled. This parameter is enabled when auto tuning is disabled. Setting range: 50 to 1000	100	PB32	Gain switching speed integral compensation When a value smaller than 0.1 ms set, the value will be the same as the setting value of [Pr. PB10]. This parameter is enabled only when "Manual mode (_ _ _ 3)" is selected in "Gain adjustment mode selection" of [Pr. PA08]. Setting range: 0.0 to 5000.0 Because the setting unit is different from that for MR-J2S-_A_, calculate the setting value using the equation below and set it. [Pr. PB32] = [Pr. PB10] × MR-J2S-_A_ [Pr. 64]/100	0.0	P S
65	Gain switching selection Select the gain switching condition. 0 0 0 _ └ Gain switching selection Gain will be changed under the following conditions based on the setting value of parameters No.61 to No.64. 0: Disabled 1: Gain switching (CDP) is ON 2: The appointed frequency is equal to or more than the setting value of parameter No. 66. 3: The droop pulse is equal to or more than the setting value of parameter No. 66. 4: The servo motor speed is equal to or more than the setting value of parameter No. 66.	0000h	PB26	Gain switching function Select the gain switching condition. Refer to the comparison table below for the setting method. Gain switching selection comparison table MR-J2S-_A_ No.65: 0 0 0 0, 0 0 0 1, 0 0 0 2, 0 0 0 3, 0 0 0 4 → MR-J4-_A_ PB26: 0 0 0 0, 0 0 0 1, 0 0 0 2, 0 0 0 3, 0 0 0 4	0000h	P S

MR-J2S-_A_			MR-J4-_A_			Control mode
No.	Name and function	Initial value	No.	Name and function	Initial value	
66	Gain switching condition Used to set the values for the gain switching conditions (command frequency, droop pulses, and servo motor speed) selected in [Pr. 65]. The set value unit differs depending on the switching condition item. Setting range: 0 to 9999	10	PB27	Gain switching condition Used to set the values for the gain switching conditions (command frequency, droop pulses, and servo motor speed) selected in [Pr. PB26]. The set value unit differs depending on the switching condition item. Setting range: 0 to 9999 Set the same value as for MR-J2S-_A_.	10	P S
67	Gain switching time constant Used to set the time constant at which the gains will switch in response to the conditions set in [Pr. 65] and [Pr. 66]. Setting range: 0 to 100	1	PB28	Gain switching time constant Used to set the time constant at which the gains will switch in response to the conditions set in [Pr. PB26] and [Pr. PB27]. Setting range: 0 to 100 Set the same value as for MR-J2S-_A_.	1	P S
69	Command pulse multiplication numerator 2 Used to set a multiplier for the command pulse. When "0" is set as the setting value, the resolution of the connected motor is set automatically. Setting range: 0 to 65535 When using this parameter, enable the CM1 and CM2 signals in [Pr. 43] to [Pr. 48].	1	PC32	Commanded pulse multiplication numerators 2 to 4 To enable the parameter, select "Electronic gear (0 _ _ _)" or "J3A electronic gear setting value compatibility mode (2 _ _ _)" in "Electronic gear selection" in [Pr. PA21]. Setting range: 0 to 16777215 When using this parameter, enable the CM1 and CM2 signals in [Pr. PD03] to [Pr. PD22]. Set as follows. (1) For primary replacement Set the same value as the setting value for MR-J2S-_A_. (2) For secondary/simultaneous replacement Set a value 32 x the MR-J2S-_A_ setting value.	1	P
70	Command pulse multiplication numerator 3 Used to set a multiplier for the command pulse. When "0" is set as the setting value, the resolution of the connected motor is set automatically. Setting range: 0 to 65535 When using this parameter, enable the CM1 and CM2 signals in [Pr. 43] to [Pr. 48].	1	PC33		1	P
71	Command pulse multiplication numerator 4 Used to set a multiplier for the command pulse. When "0" is set as the setting value, the resolution of the connected motor is set automatically. Setting range: 0 to 65535 When using this parameter, enable the CM1 and CM2 signals in [Pr. 43] to [Pr. 48].	1	PC34		1	P
72	Internal speed command 4 Used to set speed 4 of internal speed commands. When using this parameter, enable the SP3 signal in [Pr. 43] to [Pr. 48].	200	PC08	Internal speed command 4 This is used to set speed 4 of internal speed commands. When using this parameter, enable the SP3 signal in [Pr. PD03] to [Pr. PD22]. Set the same value as for MR-J2S-_A_.	200	S
	Internal speed limit 4 Used to set speed 4 of internal speed limits. When using this parameter, enable the SP3 signal in [Pr. 43] to [Pr. 48].			Internal speed limit 4 This is used to set speed 4 of internal speed limits. When using this parameter, enable the SP3 signal in [Pr. PD03] to [Pr. PD22]. Set the same value as for MR-J2S-_A_.		T

MR-J2S-_A_			MR-J4-_A_			Control mode
No.	Name and function	Initial value	No.	Name and function	Initial value	
73	Internal speed command 5 Used to set speed 5 of internal speed commands. When using this parameter, enable the SP3 signal in [Pr. 43] to [Pr. 48].	300	PC09	Internal speed command 5 This is used to set speed 5 of internal speed commands. When using this parameter, enable the SP3 signal in [Pr. PD03] to [Pr. PD22]. Set the same value as for MR-J2S-_A_.	300	S
	Internal speed limit 5 Used to set speed 5 of internal speed limits. When using this parameter, enable the SP3 signal in [Pr. 43] to [Pr. 48].			Internal speed limit 5 This is used to set speed 5 of internal speed limits. When using this parameter, enable the SP3 signal in [Pr. PD03] to [Pr. PD22]. Set the same value as for MR-J2S-_A_.		T
74	Internal speed command 6 Used to set speed 6 of internal speed commands. When using this parameter, enable the SP3 signal in [Pr. 43] to [Pr. 48].	500	PC10	Internal speed command 6 This is used to set speed 6 of internal speed commands. When using this parameter, enable the SP3 signal in [Pr. PD03] to [Pr. PD22]. Set the same value as for MR-J2S-_A_.	500	S
	Internal speed limit 6 Used to set speed 6 of internal speed limits. When using this parameter, enable the SP3 signal in [Pr. 43] to [Pr. 48].			Internal speed limit 6 This is used to set speed 6 of internal speed limits. When using this parameter, enable the SP3 signal in [Pr. PD03] to [Pr. PD22]. Set the same value as for MR-J2S-_A_.		T
75	Internal speed command 7 Used to set speed 7 of internal speed commands. When using this parameter, enable the SP3 signal in [Pr. 43] to [Pr. 48].	800	PC11	Internal speed command 7 This is used to set speed 7 of internal speed commands. When using this parameter, enable the SP3 signal in [Pr. PD03] to [Pr. PD22]. Set the same value as for MR-J2S-_A_.	800	S
	Internal speed limit 7 Used to set speed 7 of internal speed limits. When using this parameter, enable the SP3 signal in [Pr. 43] to [Pr. 48].			Internal speed limit 7 This is used to set speed 7 of internal speed limits. When using this parameter, enable the SP3 signal in [Pr. PD03] to [Pr. PD22]. Set the same value as for MR-J2S-_A_.		T
76	Internal torque limit 2 Set the parameter assuming that the maximum torque is 100 [%]. The parameter is for limiting the torque of the servo motor. When "0" is set, no torque is generated. When using this parameter, enable the TL1 signal in [Pr. 43] to [Pr. 48].	100	PC35	Internal torque limit 2 Used to set the parameter assuming that the maximum torque is 100.0%. The parameter is for limiting the torque of the servo motor. However, when "0.0" is set, no torque is generated. Setting range: 0.0 to 100.0 When using this parameter, enable the TL1 signal in [Pr. PD03] to [Pr. PD22]. Set the same value as for MR-J2S-_A_.	100.0	P S T

3.7 Important Points for Replacement (Command Pulse Logic Settings)

When carrying out positioning in the forward and reserve rotation pulse train setting for the MR-J4-_A_ servo amplifier, it is necessary to adjust the command pulse logic of the positioning module to that of the servo amplifier. Set as follows. This adjustment is unnecessary for a pulse train + symbol and an A-phase/B-phase pulse train.

⚠ CAUTION	●Even though the command pulse logic of the existing MR-J2S-_A_ servo amplifier is not the same as its positioning module, the servo motor will rotate, but in the MR-J4-_A_ servo amplifier, when the logics are not set correctly, the servo motor will not rotate normally. Make sure to check the information below to set the logics. Even when another company's controller is used, check the logic setting.

(1) For A-series positioning modules

Signal type	Command pulse logic setting (Note 1)	
	A-series positioning module Basic parameter 1 setting	MR-J4-_A_ servo amplifier [Pr. PA13] setting
Open-collector type	Positive logic	Positive logic (_ _ 0 _ h)
Differential line driver type	Positive logic (Note 2)	Negative logic (_ _ 1 _ h)

Note 1. When a pulse train + symbol and an A-phase/B-phase pulse train are used, it is unnecessary to adjust the logics.
2. For A-series and Q-series positioning modules, this logic points to the N-side waveform. Therefore, reverse the command pulse logic of the servo amplifier.

(2) For Q-series positioning modules

Signal type	Command pulse logic setting (Note 1)	
	Q-series positioning module [Pr. 23] setting	MR-J4-_A_ servo amplifier [Pr. PA13] setting
Open-collector type	Positive logic	Positive logic (_ _ 0 _ h)
	Negative logic	Negative logic (_ _ 1 _ h)
Differential line driver type	Positive logic (Note 2)	Negative logic (_ _ 1 _ h)
	Negative logic (Note 2)	Positive logic (_ _ 0 _ h)

Note 1. When a pulse train + symbol and an A-phase/B-phase pulse train are used, it is unnecessary to adjust the logics.
2. For A-series and Q-series positioning modules, this logic points to the N-side waveform. Therefore, reverse the command pulse logic of the servo amplifier.

(3) For F-series positioning modules

Signal type	Command pulse logic setting	
	F-series positioning module (fixed)	MR-J4-_A_ servo amplifier [Pr. PA13] setting
Open-collector type	Negative logic	Negative logic (_ _ 1 _ h)

[Reference] Pr. PA13, Command input pulse train form

Setting value		Pulse train form	Forward rotation (positive direction) command / Reverse rotation (negative direction) command
_ _ 10h	Negative logic	Forward rotation pulse train (positive direction pulse train) Reverse rotation pulse train (negative direction pulse train)	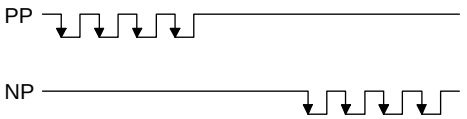
_ _ 11h	Negative logic	Signed pulse train	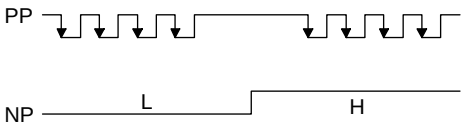
_ _ 12h	Negative logic	A-phase pulse train B-phase pulse train	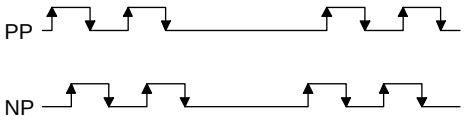
_ _ 00h	Positive logic	Forward rotation pulse train (positive direction pulse train) Reverse rotation pulse train (negative direction pulse train)	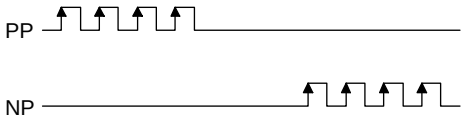
_ _ 01h	Positive logic	Signed pulse train	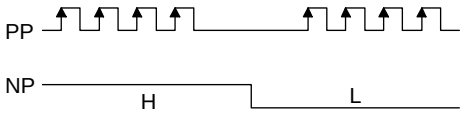
_ _ 02h	Positive logic	A-phase pulse train B-phase pulse train	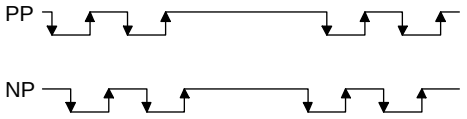

Part 3
Review on Replacement of MR-J2S-_B_ with MR-J4-_B_

Part 3: Review on Replacement of MR-J2S-_B_ with MR-J4-_B_

1. SUMMARY

This document describes the changes that are applied to when replacing a system using the MR-J2S-_B_ with a system using the MR-J4-_B_.

Versions of A-series motion controller OS that support MR-J2S-_B_

Controller setting	OS model	OS version
A171SHCPU(N)	SW0SRX-SV13G	AF and later versions
	SW0SRX-SV22F	
	SW0SRX-SV43F	T and later versions
A172SHCPU(N)	SW3RN-SV13D	G and later versions
	SW3RN-SV22C	
	SW0SRX-SV13D	AF and later versions
	SW0SRX-SV22C	
	SW0SRX-SV43C	T and later versions
A173UHCPU(-S1)	SW3RN-SV13B	G and later versions
	SW3RN-SV22A	
	SW2SRX-SV13B	AF and later versions
	SW2SRX-SV22A	
	SW2SRX-SV43A	T and later versions
A273UHCPU	SW2SRX-SV13V	AF and later versions
	SW2SRX-SV22U	
	SW2SRX-SV43U	T and later versions
A273UHCPU-S3	SW3RN-SV13X	G and later versions
	SW3RN-SV22W	

2. CASE STUDY ON REPLACEMENT OF MR-J2S-_B_

2.1 Review on Replacement Method

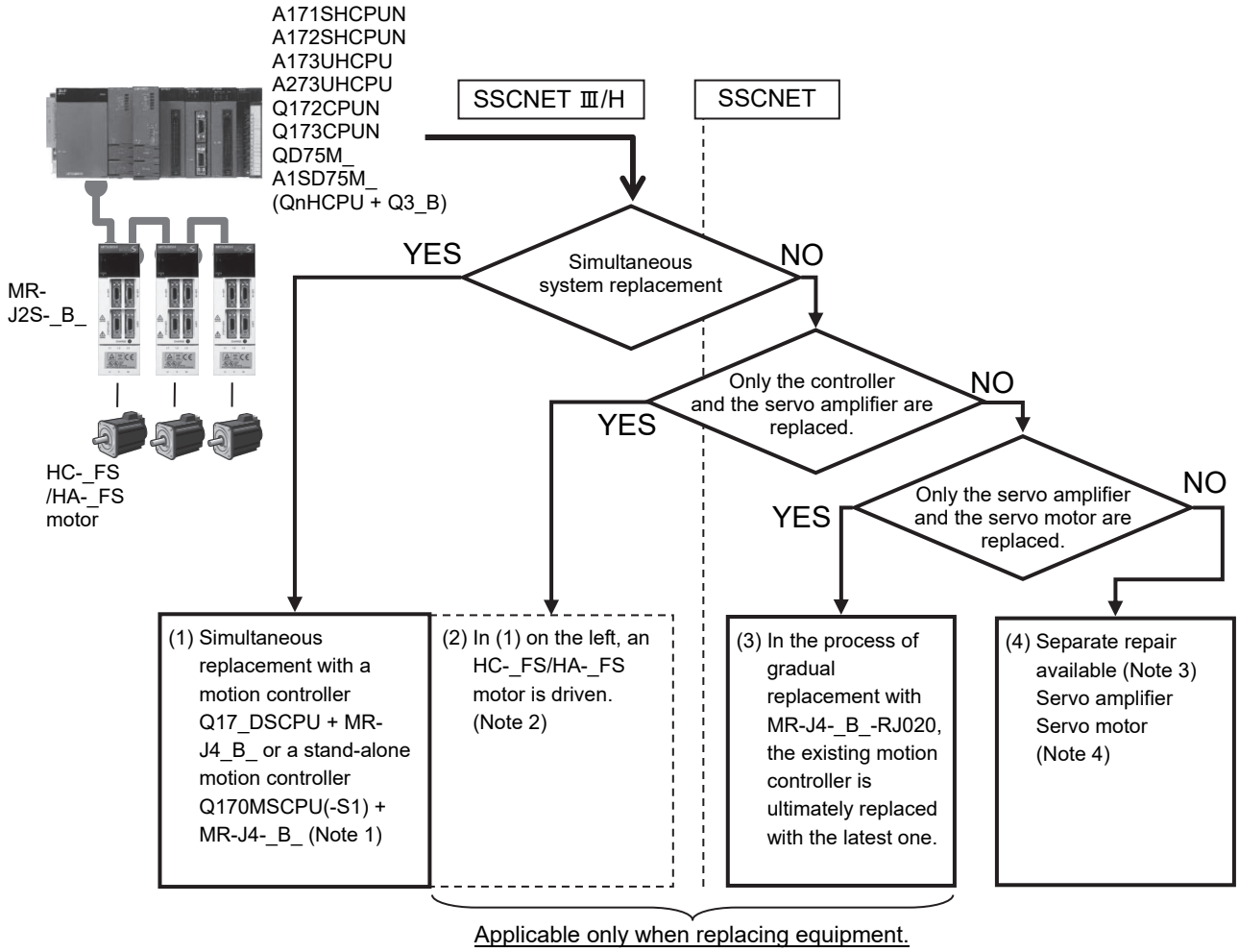

For details about (3) and (4), refer to "[Appendix 1] Summary of MR-J4-_B_-RJ020 + MR-J4-T20".

Note 1. Although heavier burdens including a longer construction period need to be borne, once replaced the system can be operated for a long period of time.
2. When designing a new system, apply simultaneous replacement at (1).
3. Separate repair means replacement.
4. When the servo motor is replaced with an HG motor, simultaneous replacement with MR-J4-_B_ and an HG motor is necessary.

2.2 Replacement Method

This section shows replacements using a QDS motion controller and an SSCNETIII/H-compatible stand-alone motion controller as examples.
For replacements using modules other than the above, refer to the following manuals.

・Transition from A17nSHCPUN/A173UHCPU Series to Q Series Handbook

(1) For simultaneous replacement

QDS motion controller + MR-J4-_B_ + HG motor	Stand-alone motion controller + MR-J4-_B_ + HG motor
QnUD(E)(H)CPU + QDS motion controller + Q3_DB 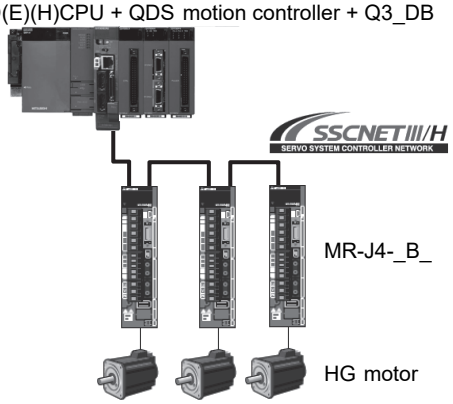 High-speed motion control and excellent extensibility can reduce cycle time.	SSCNET III/H-compatible stand-alone motion controller: Q170MSCPU (-S1) 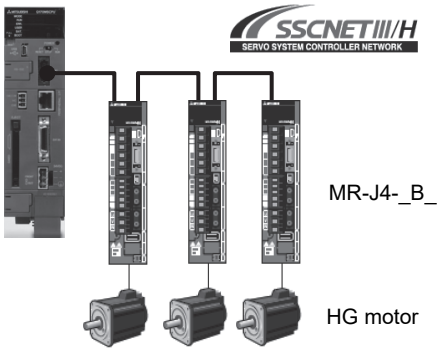 High performance equivalent to that of a QDS motion controller can be achieved at a lower cost.
"QDS motion controller" refers to the following model. ・Q172DSCPU ・Q173DSCPU	"Stand-alone motion controller" refers to the following model. ・Q170MSCPU(-S1)

(2) For replacement of a controller and a servo amplifier

QDS motion controller + MR-J4-_B_ + HC-_FS/HA-_FS motor	Stand-alone motion controller + MR-J4-_B_+ HC-_FS/HA-_FS motor
QnUD(E)(H)CPU + QDS motion controller + Q3_DB 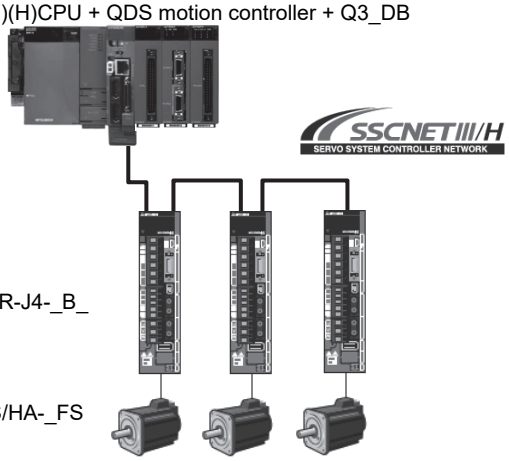 	SSCNET III/H-compatible stand-alone motion controller: Q170MSCPU(-S1) 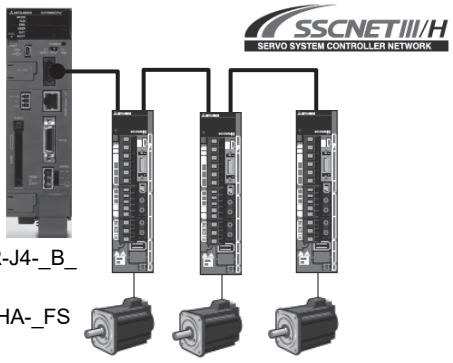

Although the HC/HA motor can continue to be used without any changes made (Note 1 and 2), the encoder resolution of the servo motor will be 17 bits.

Note 1. Consider simultaneous replacement of devices when designing a new system.
2. Please contact your local sales office for the target servo motor and servo amplifier.

POINT

●If the existing system is any of the combinations in the following table, it is recommended to replace both the servo amplifier and servo motor with an MR-J4-_B_ and HG motor at the same time. When an HG motor is adopted, the capacity of the servo amplifier needs to be changed. (Consider replacement, referring to "torque characteristics" described in "Part 8: Replacement of Motor".)

Existing device models		Replacement models for simultaneous replacement (example)	
Servo motor	Servo amplifier	Servo motor	Servo amplifier
HC-LFS52	MR-J2S-60B	HG-JR73	MR-J4-70B
HC-LFS102	MR-J2S-100B	HG-JR153	MR-J4-200B
HC-LFS152	MR-J2S-200B	HG-JR353	MR-J4-350B
HA-LFS15K2(4)(B)	MR-J2S-15KB(4)	HG-JR11K1M(4)(B)	MR-J4-11KB(4)
HA-LFS22K2(4)(B)	MR-J2S-22KB(4)	HG-JR15K1M(4)(B)	MR-J4-15KB(4)
HA-LFS30K2(4)	MR-J2S-30KB(4)	HG-JR22K1M(4)	MR-J4-22KB(4)
HA-LFS37K2(4)	MR-J2S-37KB(4)	HG-JR30K1M(4)	MR-J4-DU30KB(4)
HA-LFS45K24	MR-J2S-45KB4	HG-JR37K1M4	MR-J4-DU37KB4
HA-LFS55K24	MR-J2S-55KB4	HG-JR45K1M4	MR-J4-DU45KB4
HC-KFS46	MR-J2S-70B	HG-KR43	MR-J4-40B
HC-KFS410	MR-J2S-70B	HG-KR43	MR-J4-40B
HC-RFS103 (B) G2 1/_	MR-J2S-200B	HG-SR102 (B) G7 1/_	MR-J4-100B
HC-RFS203 (B) G2 1/_	MR-J2S-350B	HG-SR202 (B) G7 1/_	MR-J4-200B
HC-RFS353 (B) G2 1/_	MR-J2S-500B	HG-SR352 (B) G7 1/_	MR-J4-350B
HC-RFS103 (B) G5 1/_	MR-J2S-200B	HG-SR102 (B) G5 1/_	MR-J4-100B
HC-RFS203 (B) G5 1/_	MR-J2S-350B	HG-SR202 (B) G5 1/_	MR-J4-200B
HC-RFS353 (B) G5 1/_	MR-J2S-500B	HG-SR352 (B) G5 1/_	MR-J4-350B
HC-RFS103 (B) G7 1/_	MR-J2S-200B	HG-SR102 (B) G7 1/_	MR-J4-100B
HC-RFS203 (B) G7 1/_	MR-J2S-350B	HG-SR202 (B) G7 1/_	MR-J4-200B
HC-RFS353 (B) G7 1/_	MR-J2S-500B	HG-SR352 (B) G7 1/_	MR-J4-350B

(3) Gradual replacement of MR-J2S-_B_ with MR-J4-_B_
Refer to "[Appendix 1] Summary of MR-J4-_B_-RJ020 + MR-J4-T20".

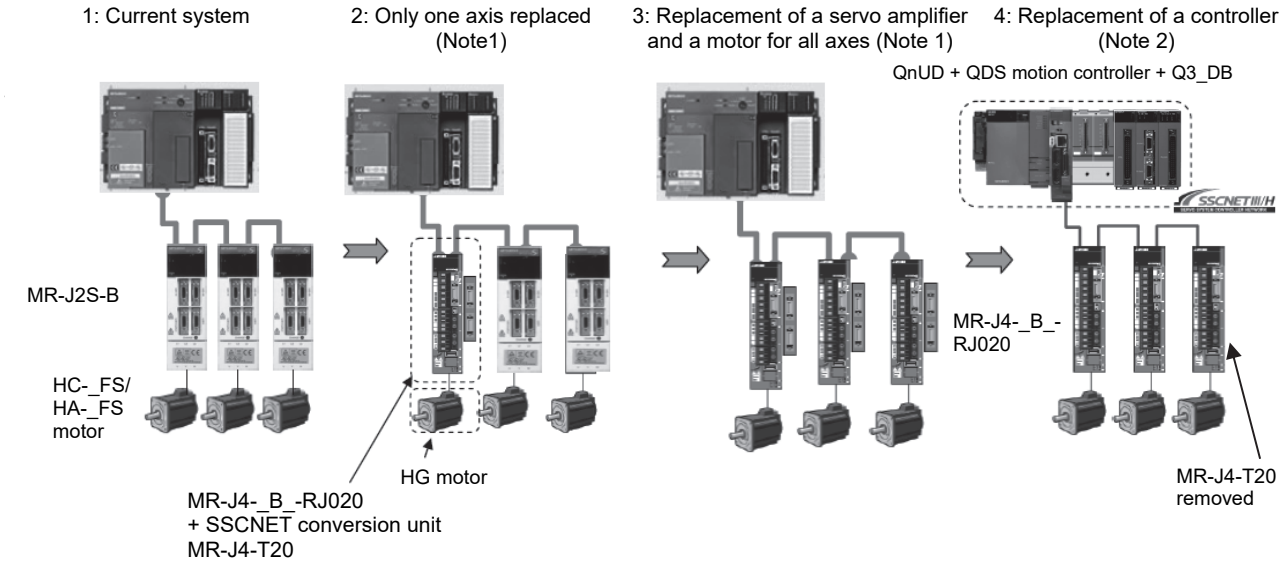

Note 1. MR-J4-_B_-RJ020 equipped with the SSCNET conversion unit operates as MR-J2S-_B_.
2. It is necessary to change MR-J4-_B_-RJ020 from J2S mode to J4 mode. Remove MR-J4-T20.
Refer to "[Appendix 1] Summary of MR-J4-_B_-RJ020 + MR-J4-T20".

(4) For separate repair

POINT

- MR-J2S-_B_ cannot drive an HG motor. When the servo motor is replaced with an HG motor, simultaneous replacement with MR-J4-_B_ and an HG motor is necessary.
- When a servo amplifier other than MR-J2S-B series and MR-J2M-B series is used with a controller, the MR-J4-B-RJ020 SSCNET conversion unit cannot be used.

Refer to "[Appendix 1] Summary of MR-J4-_B_-RJ020 + MR-J4-T20".

Servo amplifier (MR-J2S-_B_) replacement	Replacement of servo motor (HC)
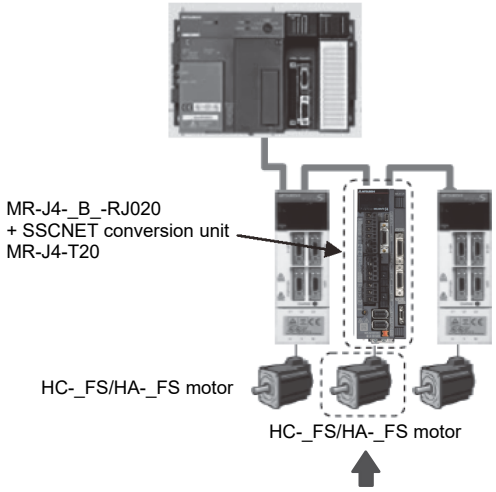	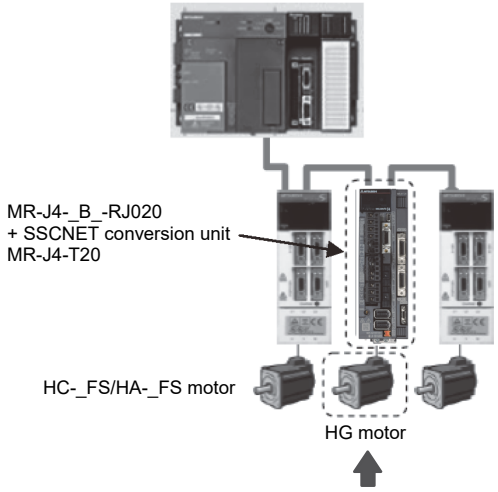
▪ MR-J4-_B_-RJ020 can drive a J2S-compatible HC/HA motor. ▪ Existing wiring can be used by using the renewal tool. (For details, refer to "[Appendix 2] Introduction to Renewal Tool".)	▪ MR-J2S-_B_ cannot drive an HG motor. Replace with MR-J4-_B_ and an HG motor simultaneously. ▪ Existing wiring can be used by using the renewal tool. For details, refer to "[Appendix 2] Introduction to Renewal Tool".

Note. Separate repair means replacement.

3. DIFFERENCES BETWEEN MR-J2S-_B_ AND MR-J4-_B_

3.1 Function Comparison Table

Item	MR-J2S-_B_	MR-J4-_B_	Compatibility	Reference material/items
Control mode	• Position control mode • Speed control mode	• Position control mode • Speed control mode • Torque control mode	○	MR-J4-_B_ servo amplifier Instruction Manual
Network	SSCNET compatible	SSCNET III/H compatible	○	MR-J4-_B_ servo amplifier Instruction Manual
Servo motor (Encoder resolution)	HC-_FS series (17-bit ABS) HA-_FS series (17-bit ABS)	HG series (22-bit ABS)	○	MR-J4-_B_ servo amplifier Instruction Manual
The number of DIO points (excluding EM1)	DI: 0 points, DO: 2 points	DI: 3 points, DO: 3 points	○	MR-J4-_B_ servo amplifier Instruction Manual, Section 5.2.4
Encoder pulse output	ABZ-phase (differential)	←	○	MR-J4-_B_ servo amplifier Instruction Manual, Section 5.2.1
DIO interface	Input: Sink/source Output: Sink	Input: Sink/source Output: Sink/source	○	MR-J4-_B_ servo amplifier Instruction Manual, Section 3.8
Analog input/output	(Output) 10-bit or equivalent × 2ch	←	○	MR-J4-_B_ servo amplifier Instruction Manual Appendix
LED display	7-segment 2-digit	7-segment 3-digit	○	MR-J4-_B_ servo amplifier Instruction Manual, Section 4.3
Interface 24 V DC power supply	Installed.	Not installed.	×	Part 7 Section 1.2.5
Network terminal connector	MR-A-TM is needed.	No terminal connector is needed.	×	—

3.2 Function List

function		MR-J2S-_B_	MR-J4-_B_	Reference material/items
Absolute position detection system		○ [Pr. 1]	○ [Pr. PA03]	MR-J4-_B_ Servo Amplifier Instruction Manual, Chapter 12
Gain switching function		○ [Pr. 49]	○ [Pr. PB26]	MR-J4-_B_ Servo Amplifier Instruction Manual, Section 7.2
Advanced vibration suppression control II		×	○ [Pr. PB02]	MR-J4-_B_ Servo Amplifier Instruction Manual, Section 7.1.5
Adaptive filter		○ (Adaptive vibration suppression control) [Pr. 25]	○ (Adaptive filter II) [Pr. PB01]	MR-J4-_B_ Servo Amplifier Instruction Manual, Section 7.1.2
Low-pass filter		○ [Pr. 25]	○ [Pr. PB23]	MR-J4-_B_ Servo Amplifier Instruction Manual, Section 7.1.4
Machine analyzer function		○ (Note 1)	○ (Note 2)	—
Gain search function		○ (Note 1)	○ (One-touch tuning)	MR-J4-_B_ Servo Amplifier Instruction Manual, Section 6.2
Robust filter		×	○ [Pr. PE41]	—
Slight vibration suppression control		○ [Pr. 24]	○ [Pr. PB24]	—
Auto tuning		○ [Pr. 8]	○ [Pr. PA08]	MR-J4-_B_ Servo Amplifier Instruction Manual, Section 6.3
Regenerative option		○ [Pr. 2]	○ [Pr. PA02]	MR-J4-_B_ Servo Amplifier Instruction Manual, Section 11.2
Torque limit		○ [Pr. 10], [Pr. 11]	○	—
Forced stop (EM1) automatic ON		○ [Pr. 23]	○ [Pr. PA04]	—
Alarm history clear		○	○ [Pr. PC21]	—
Output signal selection (device settings)		×	○ [Pr. PD07] to [Pr. PD09]	—
Output signal (DO) forced output		○ (Note 1)	○ (Note 2)	MR-J4-_B_ Servo Amplifier Instruction Manual, Section 4.5.1 (1)
Test operation mode	Motor-less operation	○ [Pr. 24]	○ [Pr. PC05]	MR-J4-_B_ Servo Amplifier Instruction Manual, Section 4.5
	Other than the above	○ (Note 1)	○ (Note 2)	
Analog monitor output		○ [Pr. 22]	○ [Pr. PC09], [Pr. PC10]	MR-J4-_B_ Servo Amplifier Instruction Manual Appendix

function	MR-J2S-_B_	MR-J4-_B_	Reference material/items
Setup software	Setup software (SETUP161E)	MR Configurator2	MR-J4-_B_ Servo Amplifier Instruction Manual, Section 11.7
Linear servo system	×	○	MR-J4-_B_ Servo Amplifier Instruction Manual, Chapter 14
Direct drive servo system	×	○	MR-J4-_B_ Servo Amplifier Instruction Manual, Chapter 15
Fully closed loop system	×	○	MR-J4-_B_ Servo Amplifier Instruction Manual, Chapter 16
STO function	×	○	MR-J4-_B_ Servo Amplifier Instruction Manual, Chapter 13

Note 1. Setup software (SETUP161E) is necessary for this function.
2. MR Configurator2 is necessary for this function.

3.3 Comparison of Networks

MR-J4-_B_ servo amplifier is connected to controllers, including a servo system controller, on the high-speed synchronous network SSCNET III/H. The servo amplifier directly receives a command from a controller to drive a servo motor.
SSCNET III/H allows higher-speed communication of 150 Mbps for both upstream and downstream traffic to be achieved with high noise resistance enabled by adoption of the SSCNET III optical cables. Large amounts of data are exchanged in real-time between the controller and the servo amplifier. Servo monitor information is stored in the upper information system and is used for control.

3.3.1 Comparison of servo system network specifications

Item	MR-J2S series		MR-J4 series (Note 1)	
	SSCNET		SSCNET III	SSCNET III/H
Communication media	Metal cable	→	Optical fiber cable	
Communication speed	5.6Mbps		50Mbps	150Mbps
Transmission distance	Overall length: 30 m		[Standard cord inside cabinet/standard cable outside cabinet] Maximum distance between stations: 20 m Maximum overall distance: 320 m (20 m x 16 axes)	
			[Long distance cable] Maximum distance between stations: 50 m Maximum overall distance: 800 m (50 m × 16 axes)	[Long distance cable] Maximum distance between stations: 100 m Maximum overall distance: 1600 m (100 m × 16 axes)

Note 1. When SSCNET III/H communication is used to receive a command sent for the first time from the controller in the factory setting, the operation mode is fixed to"J4 mode". To return to the factory setting or to select an arbitrary mode, change the setting with the application "MR-J4 (W)-B mode selection".
The application "MR-J4 (W)-B mode selection" is available with MR Configurator2 Version 1.12N and later. When a version older than 1.12N is used, download an update version from the MITSUBISHI ELECTRIC FA Global Website.

(1) Explanation of SSCNET III/H cable models
The numbers in the cable length field of the table indicate the symbol filling the underline "_" in the cable model. The cables of the lengths with the symbols are available.

Cable model	Cable length (m)											Flex life	Application/remark
	0.15	0.3	0.5	1	3	5	10	20	30	40	50		
MR-J3BUS_M	015	03	05	1	3							Standard	Using standard cord inside cabinet
MR-J3BUS_M-A						5	10	20				Standard	Using standard cable outside cabinet
MR-J3BUS_M-B (Note)									30	40	50	High flex life	Using long distance cable

Note. For cable of 30 m or shorter, contact your local sales office.
Contact Mitsubishi Electric System & Service about ultra-high flex-life cables and long distance cables longer than 50 m.

(2) SSCNET III/H cable specifications

		Description			
SSCNET III/H cable model		MR-J3BUS_M		MR-J3BUS_M-A	MR-J3BUS_M-B
SSCNET III/H cable length		0.15 m	0.3 m to 3 m	5 m to 20 m	30 m to 50 m
Optical cable (cord)	Minimum bend radius	25 mm		Enforced covering cable: 50 mm Cord: 25 mm	Enforced covering cable: 50 mm Cord: 30 mm
	Tension strength	70 N	140 N	420 N (Enforced covering cable)	980 N (Enforced covering cable)
	Temperature range for use (Note)	-40 °C to 85 °C			-20 °C to 70 °C
	Atmosphere	Indoors (not exposed to direct sunlight), no solvent or oil.			
	Appearance [mm]	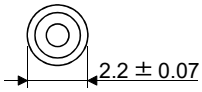	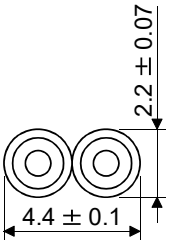	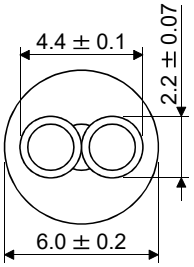	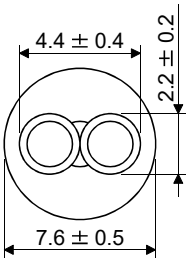

Note. This temperature range for use is the value for optical cable (cord) only. Temperature condition for the connector is the same as that for servo amplifier.

3.4 Comparison of Standard Connection Diagrams

MR-J2S-_B_	MR-J4-_B_
MR-J2S-700B or models with less capacity	
MR-J2S-11KB or models with more capacity	

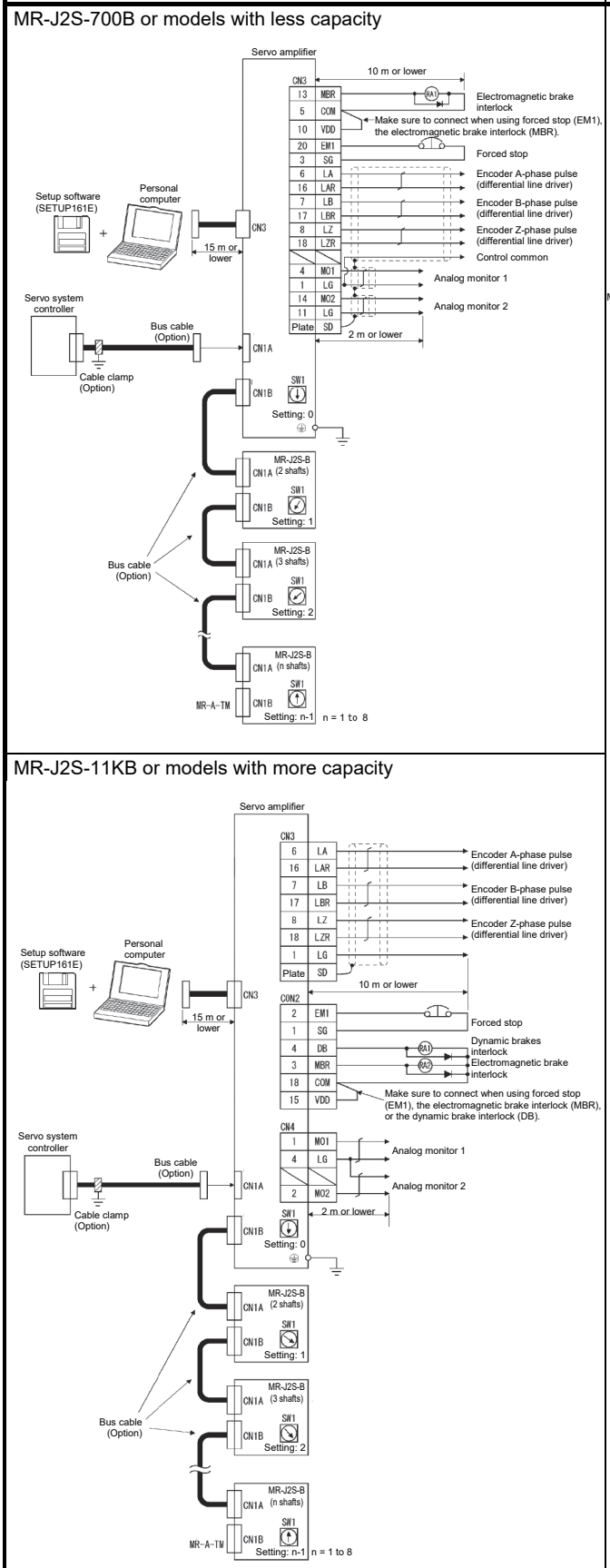

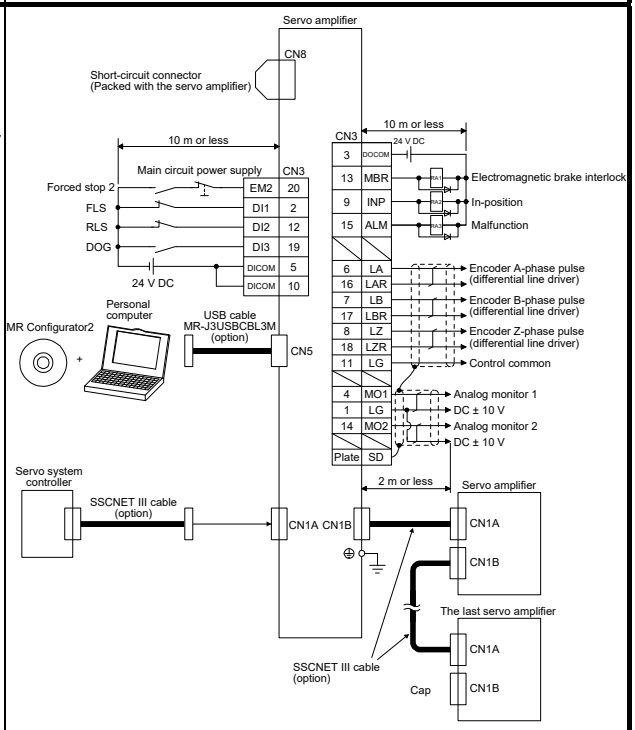

3.5 List of Corresponding Connectors and Terminal Blocks

(1) Comparison of connectors

An example of connections with the peripheral equipment is shown below. Refer to the respective Instruction Manuals for details on the signals.

MR-J2S-_B_	MR-J4-_B_
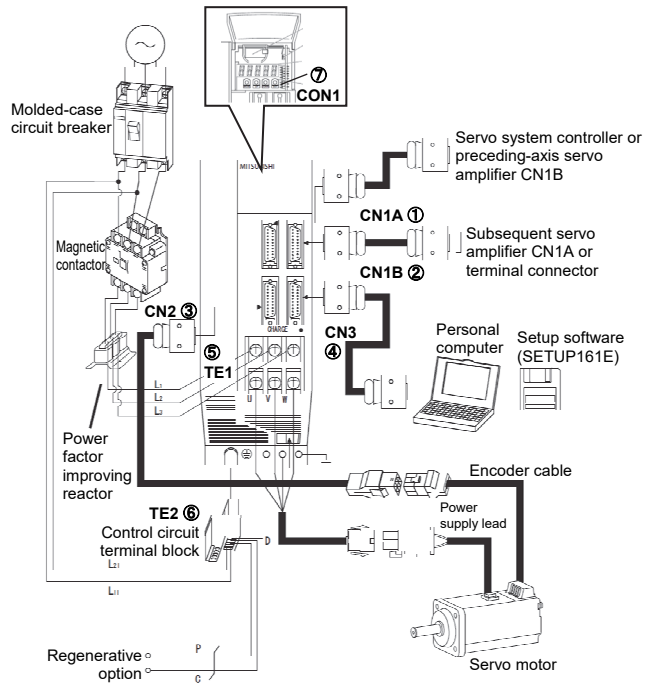 The diagram shows an example of MR-J2S-100B or less.	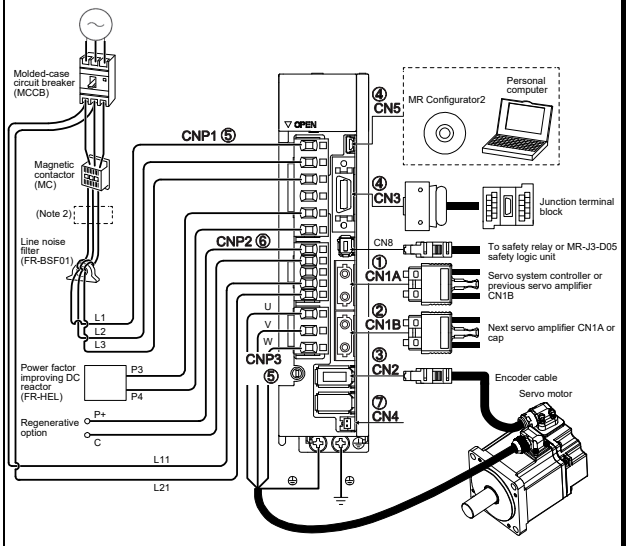 Note 1. The diagram shows an example of MR-J4-200B or less. Note 2. The power factor improving AC reactor can also be used. In this case, the power factor improving DC reactor cannot be used.
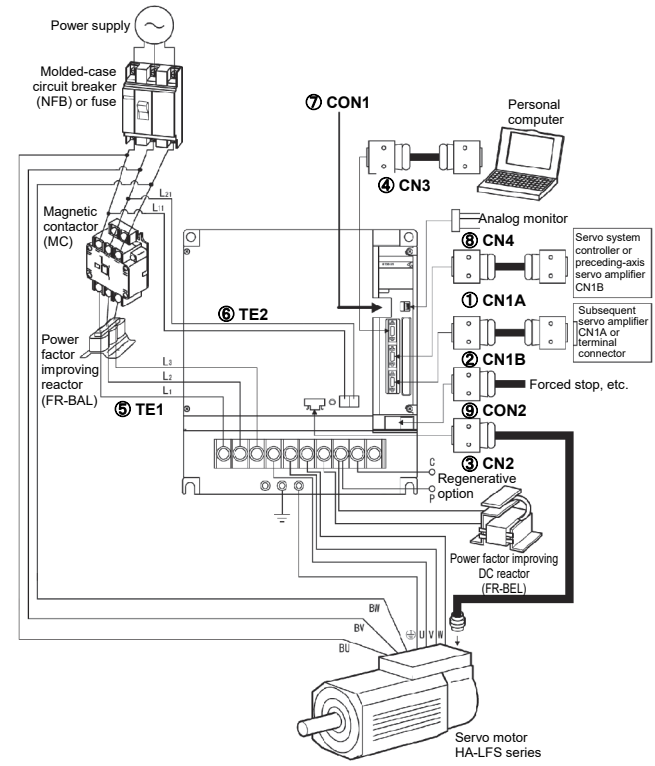 The diagram shows an example of MR-J2S-11KB or more.	

(2) List of connector and terminal block correspondence

	MR-J2S-_B_			MR-J4-_B_		Precautions
(1)	Bus cable connector		[CN1A]	SSCNET III/H cable connector	[CN1A]	Must switch to SSCNET III/H cable (option).
(2)	Bus cable-connecting connector		[CN1B]	SSCNET III/H cable connector	[CN1B]	Must switch to SSCNET III/H cable (option).
(3)	Encoder connector		[CN2]	Encoder connector	[CN2]	Must switch to encoder cable (option) or prepare a new cable.
(4)	Communication connector [CN3]	PC connection		USB communication connector	[CN5]	Must switch to USB cable (option).
		Analog monitor		I/O signal connector	[CN3]	Prepare a new cable.
		Encoder output pulses				
(8)	Analog output connector		[CN4] (Note 2)			
(9)	I/O signal connector		[CON2] (Note 2)			
(5)	Main circuit terminal block [TE1]	Input power supply		Main circuit power connector	[CNP1]	Must switch to the power connector (enclosed with the servo amplifier).
		Servo motor power supply		Servo motor power connector	[CNP3]	
(6)	Control circuit terminal block		[TE2]	Control circuit power connector	[CNP2]	
(7)	Battery connector		[CON1]	Battery connector	[CN4]	Prepare a new battery.

Note 1. When not using the STO function in MR-J4-_B_, attach a short-circuit connector supplied with a servo amplifier onto CN8 (STO input signal connector).
2. These connectors are only for MR-J2S-11KB or models with more capacity.
3. The configuration of the main circuit terminal block differs depending on capacity. Refer to "Part 7: Common Reference Material".

(3) Comparison of signals

MR-J2S-_B_ <7 kW or less>		Abbreviation (Note 1)	MR-J4-_B_	
Connector pin assignment	Connector pin No.		Connector pin No.	Connector pin assignment
CN3 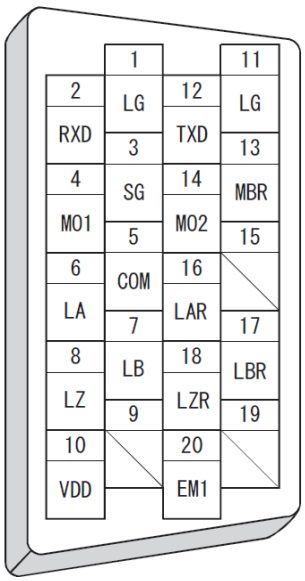	CN3-20	EM1 (EM2)	CN3-20 (Note 2)	CN3 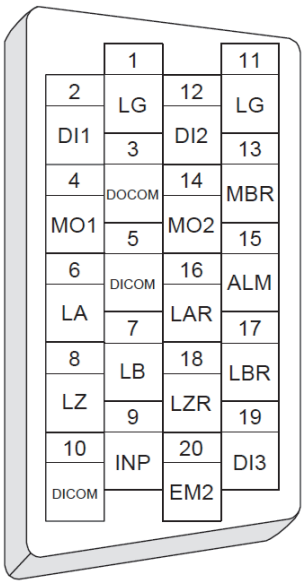
	CN3-13	MBR	CN3-13	
		DB	(Note 3)	
	CN3-6 CN3-16	LA LAR	CN3-6 CN3-16	
	CN3-7 CN3-17	LB LBR	CN3-7 CN3-17	
	CN3-8 CN3-18	LZ LZR	CN3-8 CN3-18	
	CN3-4	MO1	CN3-4	
	CN3-14	MO2	CN3-14	
	CN3-10	VDD		
	CN3-5	COM (DICOM)	CN3-5 CN3-10	
	CN3-3	SG (DOCOM)	CN3-3	
	CN3-1 CN3-11	LG	CN3-1 CN3-11	
	Plate	SD	Plate	

Note 1. Signals unique to MR-J4-_B_ are in parentheses.
2. The factory setting for MR-J4-_B_ is EM2.
3. Set with [Pr. PD07] to [PD09] for use.

MR-J2S-_B_ <11 kW or more>		Abbreviation (Note 1)	MR-J4-_B_	
Connector pin assignment	Connector pin No.		Connector pin No.	Connector pin assignment
CON2	CON2-1	SG (DOCOM)	CN3-3	
	CON2-2	EM1 (EM2)	CN3-20 (Note 2)	
	CON2-3	MBR	CN3-13	
	CON2-4	DB	(Note 3)	
	CON2-15	VDD		
	CON2-18	COM (DICOM)	CN3-5 CN3-10	
	CN3-6 CN3-16	LA LAR	CN3-6 CN3-16	
	CN3-7 CN3-17	LB LBR	CN3-7 CN3-17	
	CN3-8 CN3-18	LZ LZR	CN3-8 CN3-18	
	CN4-1	MO1	CN3-4	
	CN4-2	MO2	CN3-14	
	CN4-4	LG	CN3-1 CN3-11	
	Plate	SD	Plate	

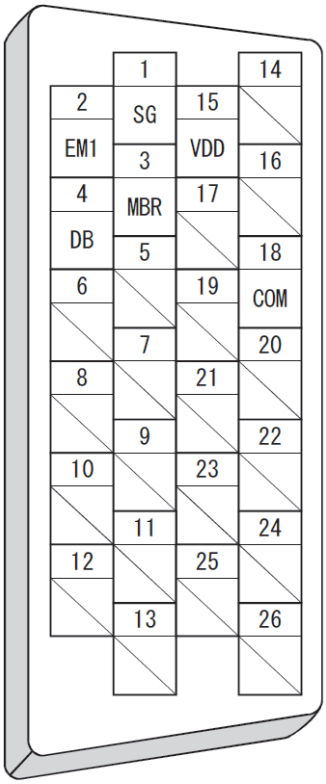

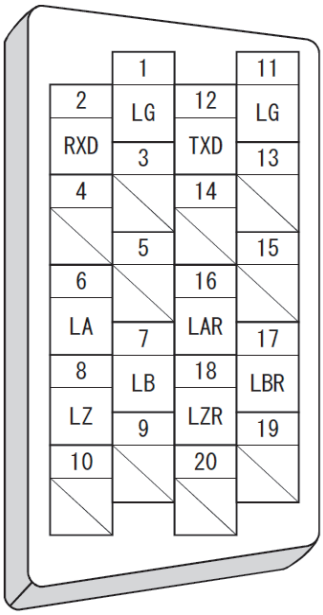

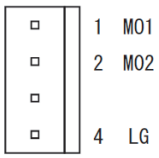

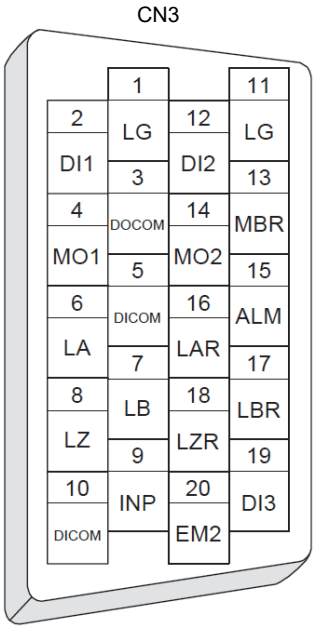

Note 1. Signals unique to MR-J4-_B_ are in parentheses.
2. The factory setting for MR-J4-_B_ is EM2.
3. Set with [Pr. PD07] to [Pr. PD09] for use.

3.6 Comparison of Peripheral Equipment

POINT
●Refer to "Part 9: Review on Replacement of Optional Peripheral Equipment".

3.7 Comparison of Parameters

⚠ Note	●Never perform extreme adjustments and changes to the parameters, otherwise the operation may become unstable. ●If fixed values are written in the digits of a parameter, do not change these values. ●Do not change parameters for manufacturer setting. ●Do not enter any setting value other than those specified for each parameter.

POINT

●For the parameter converter function, refer to "Part 7: Common Reference Material".

●The parameter whose symbol is preceded by * is enabled with the following conditions:

*: After setting the parameter, cycle the power or reset the controller.

**: After setting the parameter, cycle the power.

●For details about parameter settings for replacement, refer to the MR-J4-_B_(-RJ) Servo Amplifier Instruction Manual to set parameters.

POINT

●With MR-J4-_B_, the deceleration to a stop function is enabled in the factory setting. To disable the deceleration to a stop function, set [Pr. PA04] to "0 _ _ _".

●In cases of 11 kW or more, the dynamic brake interlock (DB) needs to be assigned to a device in [Pr. PD07] to [Pr. PD09].

3.7.1 Setting requisite parameters upon replacement

The parameters shown in this section are a minimum number of parameters that need to be set for simultaneous replacement. Depending on the settings of the currently used servo amplifier, parameters other than these may need to be set.

Parameter number	Name	Precautions
PA02	Regenerative option selection	The setting must be changed according to option model.
PA04	Function selection A-1 Servo forced stop selection	Forced stop deceleration function selection To configure the same settings as for MR-J2S-_B_, select "Forced stop deceleration function disabled (with EM1 used)".
PA08	Gain adjustment mode selection	The setting value needs to be changed according to the auto tuning mode.
PA09	Auto tuning response	Auto tuning response setting Refer to "3.7.3 Comparison of parameter details" for the setting value of this parameter upon replacement. It is necessary to make gain adjustment again when replacing. For details on how to make gain adjustments, refer to Chapter 6 of the MR-J4-_B_ Servo Amplifier Instruction Manual. The setting value needs be changed based on the standard machine resonance frequency.
PA10	In-position range	The setting needs to be changed depending on the servo motor.
PA15	Encoder output pulse	Used to set the encoder pulses (A-phase and B-phase) output by the servo amplifier.
PA19	Parameter writing inhibit	Change the setting value as necessary.
PB06	Load to motor inertia ratio	The unit system is different. (0.1-fold→0.01-fold) Pay attention to setting value.
PB07	Model loop gain	The unit system is different. (rad/s→0.1 rad/s)
PB08	Position loop gain	The unit system is different. (rad/s→0.1 rad/s)
PB10	Speed integral compensation	The unit system is different. (ms→0.1 ms)
PB13	Machine resonance suppression filter 1	Change the setting value according to the frequency and depth.
PB14	Notch shape selection 1	
PB15	Machine resonance suppression filter 2	Change the setting value according to the frequency and depth.
PB16	Notch shape selection 2	
PB29	Load to motor inertia ratio after gain switching	The unit system is different. (0.1-fold→0.01-fold) Pay attention to setting value.
PB30	Position loop gain after gain switching	It is necessary to convert the ratio to a value to change the setting value.
PB31	Speed loop gain after gain switching	It is necessary to convert the ratio to a value to change the setting value.
PB32	Speed integral compensation after gain switching	It is necessary to convert the ratio to a value to change the setting value.
PC01	Error excessive alarm level	The unit system is different. MR-J2S-_B_: 0.025 rev. unit; MR-J4-_B_: 1/0.1/0.01/0.001 rev. unit selectable
PC06	Function selection C-3 Error excessive alarm level unit selection	
PC09	Analog monitor 1 output	The setting value must be changed according to monitor output data. "Maximum speed" and "Maximum torque" differ depending on the servo motor. Set according to the servo motor.
PC10	Analog monitor 2 output	
PC11	Analog monitor 1 offset	Depends on hardware. It is necessary to change the setting value.
PC12	Analog monitor 2 offset	Depends on hardware. It is necessary to change the setting value.
PD12	Function selection D-1	This is used to select enabled or disabled for the thermistor of the servo motor. : When using (HA-LFS series) servo motors that have thermal terminals and not connecting thermal signals to the MR-J4 servo amplifier, set this parameter to "1 _ _ _h (Disabled)". The overheat protection of a servo motor is not enabled. Configure a protective circuit.

3.7.2 Parameter comparison list

POINT

●Parameters for manufacturer setting are not described here.

MR-J2S-_B_ parameters						MR-J4-_B_ parameters				
No.	Abbreviation	Parameter name		Initial value	Customer setting value	No.	Abbreviation	Parameter name	Initial value	Customer setting value
1	*AMS	Amplifier setting Absolute position detection system selection		0000		PA03	*ABS	Absolute position detection system selection	0000h	
2	*REG	Regenerative resistor	Regenerative option selection	0000		PA02	**REG	Regenerative options selection	0000h	
			External dynamic brake selection					Substituted with [Pr. PD07] to [Pr. PD09]		
3		Automatically set from the servo system controller		0080				No corresponding parameter (no need to set)		
4		Automatically set from the servo system controller		0000				No corresponding parameter (no need to set)		
5		Automatically set from the servo system controller		1				No corresponding parameter (no need to set)		
6	*FBP	: Number of feedback pulses		0				No corresponding parameter		
7	*POL	Rotation Direction Selection		0		PA14	*POL	Rotation Direction Selection	0	
8	ATU	Auto tuning gain adjustment mode selection		0001		PA08	ATU	Gain adjustment mode selection	0001h	
9	RSP	Servo response		7 kW or less: 0005 11 kW or more: 0002		PA09	RSP	Auto Tuning Response	16	
10	TLP	Forward rotation torque limit		300				No corresponding parameter		
11	TLN	Reverse rotation torque limit		300				No corresponding parameter		
12	GD2	Load to motor inertia ratio		7.0		PB06	GD2	Load to motor inertia ratio	7.00	
13	PG1	Position loop gain 1		7 kW or less: 35 11 kW or more: 19		PB07	PG1	Model loop gain	15.0	
14	VG1	Speed loop gain 1		7 kW or less: 177 11 kW or more: 96				No corresponding parameter (no need to set)		
15	PG2	Position loop gain 2		7 kW or less: 35 11 kW or more: 19		PB08	PG2	Position loop gain	37.0	
16	VG2	Speed loop gain 2		7 kW or less: 817 11 kW or more: 455		PB09	VG2	Speed loop gain	823	
17	VIC	Speed integral compensation		7 kW or less: 48 11 kW or more: 91		PB10	VIC	Speed integral compensation	33.7	
18	NCH	Machine resonance suppression filter 1	Notch frequency selection	0000		PB13	NH1	Machine resonance suppression filter 1	4500	
			Notch depth selection			PB14	NHQ1	Notch shape selection 1	0000h	
19	FFC	Feed Forward Gain		0		PB04	FFC	Feed Forward Gain	0	
20	INP	In-position Range		100		PA10	INP	In-position Range	1600	

MR-J2S-_B_ parameters						MR-J4-_B_ parameters				
No.	Abbreviation	Parameter name		Initial value	Customer setting value	No.	Abbreviation	Parameter name	Initial value	Customer setting value
21	MBR	Electromagnetic Brake Sequence Output		0		PC02	MBR	Electromagnetic Brake Sequence Output	0	
22	MOD	Analog monitor output	Analog monitor 1 output selection	0001		PC09	MOD1	Analog monitor 1 output	0000h	
			Analog monitor 2 output selection			PC10	MOD2	Analog monitor 2 output	0000h	
23	*OP1	Option function 1 Servo forced stop selection		0000		PA04	*AOP1	Function selection A-1 Servo forced stop selection	2000h	
24	*OP2	Option function 2	Slight vibration suppression control selection	0000		PB24	*MVS	Slight vibration suppression control selection	0000h	
			Motor-less operation selection			PC05	**COP2	Function selection C-2 Motor-less operation selection	0000h	
25	LPF	Low-pass filter/adaptive vibration suppression control	Low-pass filter selection	0000		PB23	VFBF	Low-pass Filter Selection	0000h	
			Adaptive vibration suppression control selection					No corresponding parameter (The machine resonance filter can be automatically set with [Pr. PB01].)		
			Adaptive vibration suppression control level selection							
27	MO1	Analog monitor 1 offset		0		PC11	MO1	Analog monitor 1 offset	0	
28	MO2	Analog monitor 2 offset		0		PC12	MO2	Analog monitor 2 offset	0	
30	ZSP	Zero Speed		50		PC07	ZSP	Zero Speed	50	
31	ERZ	Error excessive alarm level		80		PC01	ERZ	Error excessive alarm level	0	
						PC06	*COP3	Function selection C-3 Error excessive alarm level unit selection	0000h	
32	OP5	Option function 5 PI-PID control switching selection		0000		PB24	*MVS	PI-PID switching control selection	0000h	
33	*OP6	Option function 6	Serial communication baud rate selection	0000				No corresponding parameter		
			Serial communication response delay time					No corresponding parameter		
			Encoder output pulse setting selection			PC03	*ENRS	Encoder output pulse setting selection	0000h	
34	VPI	PI-PID switching position droop		0						
36	VDC	Speed Differential Compensation		980		PB11	VDC	Speed Differential Compensation	980	
38	*ENR	Encoder output pulse		4000		PA15	*ENR	Encoder output pulse	4000	
40	*BLK	Parameter Writing Inhibit		0000		PA19	*BLK	Parameter Writing Inhibit	00ABh	
49	*CDP	Gain Changing Selection		0000		PB26	*CDP	Gain Changing Selection	0000h	
50	CDS	Gain Switching Condition		10		PB27	CDL	Gain Switching Condition	10	
51	CDT	Gain Switching Time Constant		1		PB28	CDT	Gain Switching Time Constant	1	
52	GD2B	Load to motor inertia ratio 2		7.0		PB29	GD2B	Load to motor inertia ratio after gain switching	7.00	
53	PG2B	Position loop gain 2 changing ratio		100		PB30	PG2B	Position loop gain after gain switching	0.0	
54	VG2B	Speed loop gain 2 changing ratio		100		PB31	VG2B	Speed loop gain after gain switching	0	
55	VICB	Speed integral compensation changing ratio		100		PB32	VICB	Speed integral compensation after gain switching	0.0	
60	*OPC	Option function C Encoder pulse output phase changing		0000		PC03	*ENRS	Encoder output pulse phase selection	0000h	
61	NH2	Machine resonance suppression filter 2	Notch frequency selection	0000		PB15	NH2	Machine resonance suppression filter 2	4500	
			Notch depth selection			PB16	NHQ2	Notch shape selection 2	0000h	

3.7.3 Comparison of parameter details

<table>
<tr><th colspan="3">MR-J2S-_B_</th><th colspan="3">MR-J4-_B_</th></tr>
<tr><th>No.</th><th>Name and function</th><th>Initial value</th><th>No.</th><th>Name and function</th><th>Initial value</th></tr>
<tr><td>1</td><td>Amplifier setting
Used to select absolute position detection system.
0 0 0 _
└ Absolute position detection system selection
0: Disabled (used in incremental system)
1: Enabled (Used in absolute position detection system)</td><td>0000</td><td>PA03</td><td>Absolute position detection system
This parameter is set when using the absolute position detection system. This parameter cannot be used in the speed control mode and torque control mode.
<table>
<tr><th>Setting digit</th><th>Explanation</th><th>Initial value</th></tr>
<tr><td>_ _ _ X</td><td>Absolute position detection system selection
0: Disabled (Use incremental system.)
1: Enabled (Use absolute position detection system.)</td><td>0h</td></tr>
<tr><td>_ _ X _</td><td>For manufacturer setting</td><td>0h</td></tr>
<tr><td>_ X _ _</td><td></td><td>0h</td></tr>
<tr><td>X _ _ _</td><td></td><td>0h</td></tr>
</table></td><td>0000h</td></tr>
<tr><td>2</td><td>Regenerative resistor
Used to select the regenerative option to be used.
0 _ _ _ Regenerative
└ Regenerative option selection
00: • The regenerative option is not used by the servo amplifier at 7 kW or less (built-in regenerative resistor is used). MR-J2S-10B cannot be used as it does not have a built-in regenerative resistor.
• The supplied regenerative resistor or regenerative option is used in the servo amplifier at 11 kW or more.
01: FR-RC, FR-BU2, FR-CV
05: MR-RB32
08: MR-RB30
09: MR-RB50 (Cooling fan is required.)
0B: MR-RB31
0C: MR-RB51 (Cooling fan is required.)
0E: When increasing the capabilities by using a cooling fan to cool the supplied regeneration resistor with the servo amplifier of 11 kW to 22 kW
10: MR-RB032
11: MR-RB12
└ External dynamic break selection
0: Disabled
1: Enabled
Select "1" when using the external dynamic brake with MR-J2S-11KB or models with more capacity.</td><td>0000</td><td>PA02</td><td>Regenerative options
Used to select the regenerative option.
An incorrect setting may cause the regenerative option to burn out.
When a regenerative option that is not compatible with a servo amplifier is selected, a parameter error (AL. 37) occurs.
<table>
<tr><th>Setting digit</th><th>Explanation</th><th>Initial value</th></tr>
<tr><td>_ _ X X</td><td>Regenerative options selection
00: Do not use regenerative options
• In case of servo amplifier of 100 W, do not use regenerative options.
• In case of servo amplifier of 0.2 kW to 7 kW, use a built-in regenerative resistor.
• Use a supplied regenerative resistor or regenerative options on a servo amplifier of 11 kW to 22 kW.
01: FR-RC/FR-CV/FR-BU2
When using FR-RC, FR-CV, and FR-BU2, select "Method 2 (_ _ _ 1)" from "undervoltage alarm detection method selections" for [Pr. PC20].
02: MR-RB032
03: MR-RB12
04: MR-RB32
05: MR-RB30
06: MR-RB50 (cooling fan is needed)
08: MR-RB31
09: MR-RB51 (cooling fan is needed)
0B: MR-RB3N
0C: MR-RB5N (cooling fan is needed)
FA: When cooling a supplied regenerative resistor or regenerative option on a servo amplifier of 11 kW to 22 kW, and improving the function</td><td>00h</td></tr>
<tr><td>_ X _ _</td><td>For manufacturer setting</td><td>0h</td></tr>
<tr><td>X _ _ _</td><td></td><td>0h</td></tr>
</table></td><td>0000h</td></tr>
<tr><td></td><td></td><td></td><td>PD07
to
PD09</td><td>Output device selection 1 to 3
You can assign any output device to pins CN3-13, CN3-9, and CN3-15.
<table>
<tr><th>Setting digit</th><th>Explanation</th><th>Initial value</th></tr>
<tr><td>_ _ X X</td><td>Device selection
Refer to table below for the setting value.</td><td>Refer to right table.</td></tr>
<tr><td>_ X _ _</td><td>For manufacturer setting</td><td>0h</td></tr>
<tr><td>X _ _ _</td><td></td><td>0h</td></tr>
</table>
Selectable I/O device
<table>
<tr><th>Setting value</th><th>Output Device</th></tr>
<tr><td>00</td><td>Always OFF</td></tr>
<tr><td>02</td><td>RD: Ready</td></tr>
<tr><td>03</td><td>ALM: Malfunction</td></tr>
<tr><td>04</td><td>INP: In-position</td></tr>
<tr><td>05</td><td>MBR: Electromagnetic brake interlock</td></tr>
<tr><td>06</td><td>DB: Dynamic brake interlock</td></tr>
<tr><td>07</td><td>TLC: Limiting torque</td></tr>
<tr><td>08</td><td>WNG: Warning</td></tr>
<tr><td>09</td><td>BWNG: Battery warning</td></tr>
<tr><td>0A</td><td>SA: Speed reached</td></tr>
<tr><td>0C</td><td>ZSP: Zero speed detection</td></tr>
<tr><td>0F</td><td>CDPS: Variable gain selection</td></tr>
<tr><td>10</td><td>CLDS: During fully closed loop control</td></tr>
<tr><td>11</td><td>ABSV: Absolute position undetermined</td></tr>
<tr><td>17</td><td>MTTR: During tough drive</td></tr>
</table>
Note: When using the external dynamic brake for MR-J4-_B_11 kW or models with more capacity, make sure to change the settings.</td><td>PD07
:
0005h

PD08
:
0004h

PD09
:
0003h</td></tr>
</table>

<table>
<tr><th colspan="3">MR-J2S-_B_</th><th colspan="3">MR-J4-_B_</th></tr>
<tr><th>No.</th><th>Name and function</th><th>Initial value</th><th>No.</th><th>Name and function</th><th>Initial value</th></tr>
<tr><td>6</td><td>Number of feedback pulses
Set the number of pulses per revolution according to controller side command. Information on the servo motor such as number of feedback pulses, current location, droop pulses, and position within one-revolution can be obtained by the value converted to the number of feedback pulses for the corresponding setting value.
<table>
<tr><th>Setting value</th><th>Number of feedback pulses</th></tr>
<tr><td>0</td><td>16384</td></tr>
<tr><td>1</td><td>8192</td></tr>
<tr><td>6</td><td>32768</td></tr>
<tr><td>7</td><td>131072</td></tr>
<tr><td>255</td><td>Varies with servo motor encoder resolution pulse number.</td></tr>
</table></td><td>0</td><td></td><td>No corresponding parameter</td><td></td></tr>
<tr><td>7</td><td>Rotation direction selection
0: Forward rotation (CCW) with the increase of the positioning address.
1: Reverse rotation (CW) with the increase of the positioning address.
 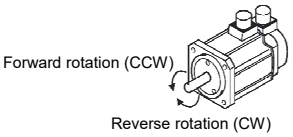
</td><td>0</td><td>PA14</td><td>Rotation direction selection
Select the command input pulse rotation direction.
<table>
<tr><th rowspan="2">Setting value</th><th colspan="2">Servo motor rotation direction</th></tr>
<tr><th>Positioning address increase</th><th>Positioning address decrease</th></tr>
<tr><td>0</td><td>CCW</td><td>CW</td></tr>
<tr><td>1</td><td>CW</td><td>CCW</td></tr>
</table>
Servo motor rotation direction is as follows:
 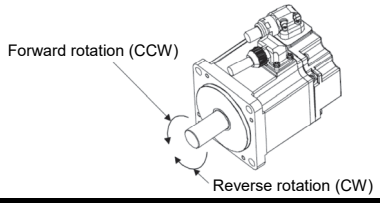
</td><td>0</td></tr>
</table>

<table>
<tr><th colspan="3">MR-J2S-_B_</th><th colspan="3">MR-J4-_B_</th></tr>
<tr><th>No.</th><th>Name and function</th><th>Initial value</th><th>No.</th><th>Name and function</th><th>Initial value</th></tr>
<tr>
<td>8</td>
<td>Auto Tuning
Used to select the auto tuning gain adjustment mode.
0 0 0 ☐
Gain adjustment mode selection
<table>
<tr><th>Setting value</th><th>Gain adjustment mode</th><th>Adjustment description</th></tr>
<tr><td>0</td><td>Interpolation mode</td><td>Fix the position loop gain 1 ([Pr. 13])</td></tr>
<tr><td>1</td><td>Auto tuning mode 1</td><td>Auto tuning in normal condition</td></tr>
<tr><td>3</td><td>Auto tuning mode 2</td><td>Fix to the "load to motor inertia ratio" set by [Pr. 12]. The response setting can be changed.</td></tr>
<tr><td>4</td><td>Manual mode 1</td><td>Adjust manually.</td></tr>
<tr><td>2</td><td>Manual mode 2</td><td>Adjust all gains manually.</td></tr>
</table>
</td>
<td>0001</td>
<td>PA08</td>
<td>Auto tuning mode
Used to select the gain adjustment mode.
<table>
<tr><th>Setting digit</th><th>Explanation</th><th>Initial value</th></tr>
<tr><td>_ _ _ X</td><td>Gain adjustment mode selection
0: 2 gain adjustment mode 1 (Interpolation mode)
1: Auto tuning mode 1
2: Auto tuning mode 2
3: Manual mode
4: 2 gain adjustment mode 2
Refer to the following table for details.</td><td>1h</td></tr>
<tr><td>_ _ X _</td><td rowspan="3">For manufacturer setting</td><td>0h</td></tr>
<tr><td>_ X _ _</td><td>0h</td></tr>
<tr><td>X _ _ _</td><td>0h</td></tr>
</table>
Gain adjustment mode selection
<table>
<tr><th>Setting value</th><th>Gain adjustment mode</th><th>Initial value</th></tr>
<tr><td>_ _ _ 0</td><td>2 gain adjustment mode 1 (interpolation mode)</td><td>[Pr. PB06 Load to motor inertia ratio]
[Pr. PB08 Position loop gain]
[Pr. PB09 Speed loop gain]
[Pr. PB10 Speed integral compensation]</td></tr>
<tr><td>_ _ _ 1</td><td>Auto tuning mode 1</td><td>[Pr. PB06 Load to motor inertia ratio]
[Pr. PB07 Model loop gain]
[Pr. PB08 Position loop gain]
[Pr. PB09 Speed loop gain]
[Pr. PB10 Speed integral compensation]</td></tr>
<tr><td>_ _ _ 2</td><td>Auto tuning mode 2</td><td>[Pr. PB07 Model loop gain]
[Pr. PB08 Position loop gain]
[Pr. PB09 Speed loop gain]
[Pr. PB10 Speed integral compensation]</td></tr>
<tr><td>_ _ _ 3</td><td>Manual mode</td><td></td></tr>
<tr><td>_ _ _ 4</td><td>2 gain adjustment mode 2</td><td>[Pr. PB08 Position loop gain]
[Pr. PB09 Speed loop gain]
[Pr. PB10 Speed integral compensation]</td></tr>
</table>
<Gain adjustment mode correspondence table>
<table>
<tr><th>MR-J2S-_B_</th><th>MR-J4-_B_</th></tr>
<tr><td>Interpolation mode</td><td>2 gain adjustment mode 1</td></tr>
<tr><td>Auto tuning mode 1</td><td>Auto tuning mode 1</td></tr>
<tr><td>Auto tuning mode 2</td><td>Auto tuning mode 2</td></tr>
<tr><td>Manual mode 1</td><td></td></tr>
<tr><td>Manual mode 2</td><td>Manual mode</td></tr>
</table>
</td>
<td>0001h</td>
</tr>
</table>

<table>
<tr><th colspan="3">MR-J2S-_B_</th><th colspan="3">MR-J4-_B_</th></tr>
<tr><th>No.</th><th>Name and function</th><th>Initial value</th><th>No.</th><th>Name and function</th><th>Initial value</th></tr>
<tr>
<td>9</td>
<td>Servo response
Used to select a response of the auto tuning.
0 0 0 ☐
└ Servo response setting

<table>
<tr><th>Setting value</th><th>Response level</th><th>Target machine resonance frequency</th></tr>
<tr><td>1</td><td rowspan="2">Slow response</td><td>15 Hz</td></tr>
<tr><td>2</td><td>20 Hz</td></tr>
<tr><td>3</td><td rowspan="6">↕</td><td>25 Hz</td></tr>
<tr><td>4</td><td>30 Hz</td></tr>
<tr><td>5</td><td>35 Hz</td></tr>
<tr><td>6</td><td>45 Hz</td></tr>
<tr><td>7</td><td>55 Hz</td></tr>
<tr><td>8</td><td>Medium response</td><td>70 Hz</td></tr>
<tr><td>9</td><td rowspan="6">↕</td><td>85 Hz</td></tr>
<tr><td>A</td><td>105 Hz</td></tr>
<tr><td>B</td><td>130 Hz</td></tr>
<tr><td>C</td><td>160 Hz</td></tr>
<tr><td>D</td><td>200 Hz</td></tr>
<tr><td>E</td><td>240 Hz</td></tr>
<tr><td>F</td><td>Fast response</td><td>300 Hz</td></tr>
</table>
• Decrease the setting value if hunting occurs in the machine or if the gear noise is loud.
• To improve the performance so as to shorten the stop settling time, increase the setting value</td>
<td>7 kW or less: 0005
11 kW or more: 0002</td>
<td>PA09</td>
<td>Auto tuning response
Set a response of the auto tuning.
Refer to the comparison table below for the setting method.

Response level comparison table
<table>
<tr><th>MR-J2S-_B_</th><th></th><th>MR-J4-_B_</th></tr>
<tr><th>No.9</th><th></th><th>PA09</th></tr>
<tr><td>_ _ 0 1</td><td rowspan="16">→</td><td>8 or 9</td></tr>
<tr><td>_ _ 0 2</td><td>1 1</td></tr>
<tr><td>_ _ 0 3</td><td>1 3</td></tr>
<tr><td>_ _ 0 4</td><td>1 4</td></tr>
<tr><td>_ _ 0 5</td><td>15 or 16</td></tr>
<tr><td>_ _ 0 6</td><td>17 or 18</td></tr>
<tr><td>_ _ 0 7</td><td>19 or 20</td></tr>
<tr><td>_ _ 0 8</td><td>21 or 22</td></tr>
<tr><td>_ _ 0 9</td><td>2 3</td></tr>
<tr><td>_ _ 0 A</td><td>2 5</td></tr>
<tr><td>_ _ 0 B</td><td>26 or 27</td></tr>
<tr><td>_ _ 0 C</td><td>28 or 29</td></tr>
<tr><td>_ _ 0 D</td><td>30 or 31</td></tr>
<tr><td>_ _ 0 E</td><td>3 2</td></tr>
<tr><td>_ _ 0 F</td><td>33 or 34</td></tr>
</table>
Auto Tuning Response
Set a response of the auto tuning.
<table>
<tr><th rowspan="2">Setting value</th><th colspan="2">Machine characteristics</th></tr>
<tr><th>Response level</th><th>mechanical resonance Frequency [Hz]</th></tr>
<tr><td>1</td><td rowspan="2">Slow response</td><td>2.7</td></tr>
<tr><td>2</td><td>3.6</td></tr>
<tr><td>3</td><td rowspan="18">↕</td><td>4.9</td></tr>
<tr><td>4</td><td>6.6</td></tr>
<tr><td>5</td><td>10.0</td></tr>
<tr><td>6</td><td>11.3</td></tr>
<tr><td>7</td><td>12.7</td></tr>
<tr><td>8</td><td>14.3</td></tr>
<tr><td>9</td><td>16.1</td></tr>
<tr><td>10</td><td>18.1</td></tr>
<tr><td>11</td><td>20.4</td></tr>
<tr><td>12</td><td>23.0</td></tr>
<tr><td>13</td><td>25.9</td></tr>
<tr><td>14</td><td>29.2</td></tr>
<tr><td>15</td><td>32.9</td></tr>
<tr><td>16</td><td>37.0</td></tr>
<tr><td>17</td><td>41.7</td></tr>
<tr><td>18</td><td>47.0</td></tr>
<tr><td>19</td><td rowspan="2">Medium response</td><td>52.9</td></tr>
<tr><td>20</td><td>59.6</td></tr>
</table>
<table>
<tr><th rowspan="2">Setting value</th><th colspan="2">Machine characteristics</th></tr>
<tr><th>Response level</th><th>mechanical resonance Frequency [Hz]</th></tr>
<tr><td>21</td><td rowspan="2">Medium response</td><td>67.1</td></tr>
<tr><td>22</td><td>75.6</td></tr>
<tr><td>23</td><td rowspan="18">↕</td><td>85.2</td></tr>
<tr><td>24</td><td>95.9</td></tr>
<tr><td>25</td><td>108.0</td></tr>
<tr><td>26</td><td>121.7</td></tr>
<tr><td>27</td><td>137.1</td></tr>
<tr><td>28</td><td>154.4</td></tr>
<tr><td>29</td><td>173.9</td></tr>
<tr><td>30</td><td>195.9</td></tr>
<tr><td>31</td><td>220.6</td></tr>
<tr><td>32</td><td>248.5</td></tr>
<tr><td>33</td><td>279.9</td></tr>
<tr><td>34</td><td>315.3</td></tr>
<tr><td>35</td><td>355.1</td></tr>
<tr><td>36</td><td>400.0</td></tr>
<tr><td>37</td><td>446.6</td></tr>
<tr><td>38</td><td>501.2</td></tr>
<tr><td>39</td><td rowspan="2">Fast response</td><td>571.5</td></tr>
<tr><td>40</td><td>642.7</td></tr>
</table>
</td>
<td>16</td>
</tr>
<tr>
<td>10</td>
<td>Forward rotation torque limit
Set the parameter assuming that the rated torque is 100 %.
Limit the torque during CCW rotations or CW rotations.
The torque limit on a servo system controller side is enabled except in the test operation mode by the setup software (SETUP161E).</td>
<td>300</td>
<td></td>
<td>No corresponding parameter</td>
<td></td>
</tr>
<tr>
<td>11</td>
<td>Reverse rotation torque limit
Set the parameter assuming that the rated torque is 100 %.
Limit the torque during CW rotations or CCW rotations.
The torque limit on a servo system controller side is enabled except in the test operation mode by the setup software (SETUP161E).</td>
<td>300</td>
<td></td>
<td>No corresponding parameter</td>
<td></td>
</tr>
</table>

<table>
<tr><th colspan="3">MR-J2S-_B_</th><th colspan="3">MR-J4-_B_</th></tr>
<tr><th>No.</th><th>Name and function</th><th>Initial value</th><th>No.</th><th>Name and function</th><th>Initial value</th></tr>
<tr><td>12</td><td>Load to motor inertia ratio
(Load inertia ratio)
Used to set the load inertia (moment of inertia) ratio to the servo motor shaft inertia moment. When auto tuning mode 1 or interpolation mode is selected, the result of auto tuning is automatically used.</td><td>7.0</td><td>PB06</td><td>Load to motor inertia ratio
Used to set load to motor inertia ratio.
This parameter can be set either automatically or manually depending on the [Pr. PA08] setting. Refer to the following table for details. When this parameter is set automatically, the value varies between 0.00 and 100.00.
<table>
<tr><th>Pr. PA08</th><th>State of this parameter</th></tr>
<tr><td>_ _ _ 0 (2 gain adjustment mode 1 (Interpolation mode))</td><td rowspan="2">Automatic setting</td></tr>
<tr><td>_ _ _ 1 (Auto tuning mode 1)</td></tr>
<tr><td>_ _ _ 2 (Auto tuning mode 2)</td><td rowspan="3">Manual setting</td></tr>
<tr><td>_ _ _ 3 (Manual mode)</td></tr>
<tr><td>_ _ _ 4 (2 gain adjustment mode 2)</td></tr>
</table></td><td>7.00</td></tr>
<tr><td>13</td><td>Position loop gain 1.
Used to set the gain of the position loop.
Increase the gain to improve track ability in response to the position command.
When auto tuning mode 1 or 2 is selected, the auto tuning result is automatically used.</td><td>7 kW or less: 35
11 kW or more: 19</td><td>PB07</td><td>Model loop gain
Used to set the response gain till the set position.
If the setting value is increased, traceability for position command is improved. However, if the setting value is too large, it tends to vibrate or oscillate.
This parameter can be set either automatically or manually depending on the [Pr. PA08] setting. Refer to the following table for details.
<table>
<tr><th>Pr. PA08</th><th>State of this parameter</th></tr>
<tr><td>_ _ _ 0 (2 gain adjustment mode 1 (Interpolation mode))</td><td>Manual setting</td></tr>
<tr><td>_ _ _ 1 (Auto tuning mode 1)</td><td rowspan="2">Automatic setting</td></tr>
<tr><td>_ _ _ 2 (Auto tuning mode 2)</td></tr>
<tr><td>_ _ _ 3 (Manual mode)</td><td rowspan="2">Manual setting</td></tr>
<tr><td>_ _ _ 4 (2 gain adjustment mode 2)</td></tr>
</table></td><td>15.0</td></tr>
<tr><td>14</td><td>Speed Loop Gain
Normally, it is unnecessary to change this parameter.
Higher setting increases the response level but is liable to generate vibration and/or noise.
When auto tuning mode 1 or 2 and manual mode 1 are selected, the auto tuning result is automatically used.</td><td>7 kW or less: 177
11 kW or more: 96</td><td></td><td>No corresponding parameter</td><td></td></tr>
<tr><td>15</td><td>Position loop gain 2.
Used to set the gain of the position loop.
Set this parameter to increase the position response to level load disturbance. Higher setting increases the response level but is liable to generate vibration and/or noise.
When auto tuning mode 1 or 2, manual mode 1, and interpolation mode are selected, the auto tuning result is automatically used.</td><td>7 kW or less: 35
11 kW or more: 19</td><td>PB08</td><td>Position loop gain
Used to set the gain of the position loop.
Set this parameter to increase the position response to level load disturbance.
Higher setting increases the response for load disturbance, but if the setting value is too large, vibration and noise are more likely to occur.
This parameter can be set either automatically or manually depending on the [Pr.PA08] setting. Refer to the following table for details.
<table>
<tr><th>Pr. PA08</th><th>State of this parameter</th></tr>
<tr><td>_ _ _ 0 (2 gain adjustment mode 1 (Interpolation mode))</td><td rowspan="3">Automatic setting</td></tr>
<tr><td>_ _ _ 1 (Auto tuning mode 1)</td></tr>
<tr><td>_ _ _ 2 (Auto tuning mode 2)</td></tr>
<tr><td>_ _ _ 3 (Manual mode)</td><td>Manual setting</td></tr>
<tr><td>_ _ _ 4 (2 gain adjustment mode 2)</td><td>Automatic setting</td></tr>
</table></td><td>37.0</td></tr>
<tr><td>16</td><td>Speed loop gain 2.
Set this parameter when vibration occurs on machines of low rigidity or large backlash. Higher setting increases the response level but is liable to generate vibration and/or noise.
When auto tuning mode 1 or 2 and interpolation mode are selected, the auto tuning result is automatically used.</td><td>7 kW or less: 817
11 kW or more: 455</td><td>PB09</td><td>Speed loop gain
Used to set the gain of the speed loop.
Set this parameter when vibration occurs on machines of low rigidity or large backlash. Higher setting increases the response level, but if the setting value is too large, vibration and noise are more likely to occur.
This parameter can be set either automatically or manually depending on the [Pr.PA08] setting. Refer to [Pr. PB08] table for details.</td><td>823</td></tr>
<tr><td>17</td><td>Speed integral compensation
Set the time constant for integral compensation.
When auto tuning mode 1 or 2 and interpolation mode are selected, the auto tuning result is automatically used.</td><td>7 kW or less: 48
11 kW or more: 91</td><td>PB10</td><td>Speed integral compensation
Used to set the integral time constant of the speed loop.
Decreasing the setting value will increase the response level, but vibration and noise are more likely to occur.
This parameter can be set either automatically or manually depending on the [Pr.PA08] setting. Refer to [Pr. PB08] table for details.</td><td>33.7</td></tr>
</table>

<table>
<tr><th colspan="3">MR-J2S-_B_</th><th colspan="3">MR-J4-_B_</th></tr>
<tr><th>No.</th><th>Name and function</th><th>Initial value</th><th>No.</th><th>Name and function</th><th>Initial value</th></tr>
<tr><td>18</td><td>Machine resonance suppression filter 1 (notch filter)
Used to select the machine resonance suppression filter.
0 ☐ ☐ ☐
Notch frequency selection
<table>
<tr><th>Setting</th><th>Frequency</th><th>Setting</th><th>Frequency</th><th>Setting</th><th>Frequency</th><th>Setting</th><th>Frequency</th></tr>
<tr><td>00</td><td>Invalid</td><td>08</td><td>562.5</td><td>10</td><td>281.3</td><td>18</td><td>187.5</td></tr>
<tr><td>01</td><td>4500</td><td>09</td><td>500</td><td>11</td><td>264.7</td><td>19</td><td>180</td></tr>
<tr><td>02</td><td>2250</td><td>0A</td><td>450</td><td>12</td><td>250</td><td>1A</td><td>173.1</td></tr>
<tr><td>03</td><td>1500</td><td>0B</td><td>409.1</td><td>13</td><td>236.8</td><td>1B</td><td>166.7</td></tr>
<tr><td>04</td><td>1125</td><td>0C</td><td>375</td><td>14</td><td>225</td><td>1C</td><td>160.1</td></tr>
<tr><td>05</td><td>900</td><td>0D</td><td>346.2</td><td>15</td><td>214.3</td><td>1D</td><td>155.2</td></tr>
<tr><td>06</td><td>750</td><td>0E</td><td>321.4</td><td>16</td><td>204.5</td><td>1E</td><td>150</td></tr>
<tr><td>07</td><td>642.9</td><td>0F</td><td>300</td><td>17</td><td>195.7</td><td>1F</td><td>145.2</td></tr>
</table>
Notch depth selection
<table>
<tr><th>Setting</th><th>Depth</th><th>Gain</th></tr>
<tr><td>0</td><td rowspan="4">Deep
to
Shallow</td><td>- 40 dB</td></tr>
<tr><td>1</td><td>- 14 dB</td></tr>
<tr><td>2</td><td>- 8 dB</td></tr>
<tr><td>3</td><td>- 4 dB</td></tr>
</table></td><td>0000h</td><td>PB13</td><td>Machine resonance suppression filter 1
Used to set the notch frequency of machine resonance suppression filter 1.
When "Automatic setting (_ _ _ 1)" is selected in "Filter tuning mode selection" of [Pr. PB01], the adjustment result is reflected.
When "Manual setting (_ _ _ 2)" is selected in "Filter tuning mode selection" of [Pr. PB01], this setting value is enabled.</td><td>4500</td></tr>
<tr><td></td><td></td><td></td><td>PB14</td><td>Notch shape selection 1
Set the shape of the machine resonance suppression filter 1.
When "Automatic setting (_ _ _ 1)" is selected in "Filter tuning mode selection" of [Pr. PB01], the adjustment result is reflected.
Set manually for the manual setting.
<table>
<tr><th>Setting digit</th><th>Explanation</th><th>Initial value</th></tr>
<tr><td>_ _ _ X</td><td>For manufacturer setting</td><td>0h</td></tr>
<tr><td>_ _ X _</td><td>Notch depth selection
0: -40 dB
1: -14 dB
2: -8 dB
3: -4 dB</td><td>0h</td></tr>
<tr><td>_ X _ _</td><td>Notch width selection
0: α = 2
1: α = 3
2: α = 4
3: α = 5</td><td>0h</td></tr>
<tr><td>X _ _ _</td><td>For manufacturer setting</td><td>0h</td></tr>
</table></td><td>0000h</td></tr>
<tr><td>19</td><td>Feed forward gain
Set the feed forward gain.
When the setting is 100%, the droop pulses during operation at constant speed are nearly zero. However, sudden acceleration/deceleration will increase the overshoot. As a standard, when setting the feed forward gain as 100%, set 1 s or more as the acceleration/deceleration time constant up to the rated speed.</td><td>0</td><td>PB04</td><td>Feed forward gain
Set the feed forward gain.
If 100% is set and constant-speed operation is implemented, pulse droop will be almost zero. However, sudden acceleration/deceleration will increase the overshoot. As a standard, when setting the feed forward gain as 100%, set 1 s or more as the acceleration time constant up to the rated speed.</td><td>0</td></tr>
<tr><td>20</td><td>In-position range
Set the range of droop pulses occurred when outputting INP (positioning completion) to a controller. Set by the feedback pulse unit ([Pr. 6]).
For example, when wanting to set ±10 μm in a state of direct connection to the ball screw, a lead wire length of 10 mm, and a feedback pulse 8192 pulses/rev ([Pr. 6]: 1), set "8", as shown in the equation below.
$\frac{10 \times 10^{-6}}{10 \times 10^{-3}} \times 8192 = 8.192 \approx 8$</td><td>100</td><td>PA10</td><td>In-position range
Used to set an in-position range per command pulse unit.</td><td>1600</td></tr>
<tr><td>21</td><td>Electromagnetic brake sequence output
Used to set the delay time (Tb) between MBR (Electromagnetic brake interlock) OFF and base circuit shut-off.</td><td>0</td><td>PC02</td><td>Electromagnetic brake sequence output
Used to set the delay time between MBR (Electromagnetic brake interlock) OFF and base circuit shut-off.</td><td>0</td></tr>
</table>

MR-J2S-_B_			MR-J4-_B_		
No.	Name and function	Initial value	No.	Name and function	Initial value
22	Analog monitor output Used to select the signals output to analog monitor 1 (MO1) and analog monitor 2 (MO2). 0 _ 0 _	0001	PC09	Analog monitor 1 output Used to select the signal to be output to the Analog monitor 1 (MO1).	0000h

Setting value	Analog monitor 1 (MO1)	Analog monitor 2 (MO2)
0	Servo motor speed (±8 V/max. speed)	
1	Torque (±8 V/max. torque) (Note)	
2	Servo motor speed (±8 V/max. speed)	
3	Torque (±8 V/max. torque) (Note)	
4	Current command (±8 V/max. current command)	
5	Speed command (±8 V/max. speed)	
6	Droop pulses (±10 V/128 pulses)	
7	Droop pulses (±10 V/2048 pulses)	
8	Droop pulses (±10 V/8192 pulses)	
9	Droop pulses (±10 V/32768 pulses)	
A	Droop pulses (±10 V/131072 pulses)	
B	Bus voltage (+8 V/400 V)	

Note: Output 8 V for maximum torque

Setting digit	Explanation	Initial value
_ _ X X	Analog monitor 1 output selection Refer to the following table for details.	00h
_ X _ _	For manufacturer setting	0h
X _ _ _		0h

Analog monitor setting value

Setting value	Item	Operation Mode (Note 1) Standard
00	Servo motor speed or linear servo motor speed (±8 V/max. rotational speed or max. speed)	○
01	Torque or thrust (±8 V/max. torque or max. thrust)	○
02	Servo motor speed (±8 V/max. rotational speed)	○
03	Torque (+8 V/max. torque)	○
04	Current command (±8 V/max. current command)	○
05	Speed command (±8 V/max. rotational speed)	○
06	Pulse droop (±10 V/100 pulses) (Note 2)	○
07	Servo motor-side droop pulses (±10 V/1000 pulses) (Note 2)	○
08	Servo motor-side droop pulses (±10 V/10000 pulses) (Note 2)	○
09	Servo motor-side droop pulses (±10 V/100000 pulses) (Note 2)	○
0A	Feedback position (±10 V/1 Mpulse) (Note 2)	○
0B	Feedback position (±10 V/10 Mpulses) (Note 2)	○
0C	Feedback position (±10 V/100 Mpulses) (Note 2)	○
0D	Bus voltage (+8 V/400 V, 200 V servo amplifier)	○
0E	Speed command 2 (±8 V/max. rotational speed or max. speed)	○
17	Encoder inside temperature (±10 V/±128 °C)	○

Note 1. Item with ○ are included in each operation mode.
Standard: When using rotary servo motor by standard (semi closed loop system).
2. Encoder pulse unit

PC10	Analog monitor 2 output Used to select the signal to be output to the Analog monitor 2 (MO2).	0001h

Setting digit	Explanation	Initial value
_ _ X X	Analog monitor 2 output selection Refer to [Pr. PC09] table for details.	00h
_ X _ _	For manufacturer setting	0h
X _ _ _		0h

<table>
<tr><th colspan="3">MR-J2S-_B_</th><th colspan="3">MR-J4-_B_</th></tr>
<tr><th>No.</th><th>Name and function</th><th>Initial value</th><th>No.</th><th>Name and function</th><th>Initial value</th></tr>
<tr><td>23</td><td>Optional function 1
Servo forced stop function can be disabled.
0 0 0 _
Servo forced stop selection
0: Enabled (The forced stop input EM1 is used.)
1: Disabled (The forced stop input EM1 is not used.)
Automatic ON inside</td><td>0000h</td><td>PA04</td><td>Function selection A-1
This is used to select the forced stop input and forced stop deceleration function.
<table>
<tr><th>Setting digit</th><th>Explanation</th><th>Initial value</th></tr>
<tr><td>_ _ _ X</td><td rowspan="2">For manufacturer setting</td><td>0h</td></tr>
<tr><td>_ _ X _</td><td>0h</td></tr>
<tr><td>_ X _ _</td><td>Servo forced stop selection
0: Enabled (The forced stop input EM2 or EM1 is used.)
1: Disabled (The forced stop input EM2 or EM1 is not used.)
Refer to the following table for details.</td><td>0h</td></tr>
<tr><td>X _ _ _</td><td>Forced stop deceleration function selection
0: Forced stop deceleration function disabled (EM1)
2: Forced stop deceleration function enabled (EM2)
Refer to the following table for details.</td><td>2h</td></tr>
</table>
Deceleration method
<table>
<tr><th rowspan="2">Setting value</th><th rowspan="2">EM2/EM1 selection</th><th colspan="2">Deceleration method</th></tr>
<tr><th>EM2 or EM1 is off</th><th>Alarm occurrence</th></tr>
<tr><td>0 0 _ _</td><td>EM1</td><td>MBR (electromagnetic brake interlock) turns off without the forced stop deceleration.</td><td>MBR (electromagnetic brake interlock) turns off without the forced stop deceleration.</td></tr>
<tr><td>2 0 _ _</td><td>EM2</td><td>MBR (electromagnetic brake interlock) turns off after the forced stop deceleration.</td><td>MBR (electromagnetic brake interlock) turns off after the forced stop deceleration.</td></tr>
<tr><td>0 1 _ _</td><td>Not using EM2 or EM1</td><td></td><td>MBR (electromagnetic brake interlock) turns off without the forced stop deceleration.</td></tr>
<tr><td>2 1 _ _</td><td>Not using EM2 or EM1</td><td></td><td>MBR (electromagnetic brake interlock) turns off after the forced stop deceleration.</td></tr>
</table></td><td>2000h</td></tr>
<tr><td>24</td><td>Optional function 2
Used to select the slight vibration suppression control and motor-less operation.
0 _ _ 0
Slight vibration suppression control selection
It will become effective if the auto tuning selection is set as "0002" by [Pr. 8]. Used to curb vibration at the time of stop.
0: Disabled
1: Enabled
Motor-less operation selection
0: Disabled
1: Used to enable motor-less operation. When motor-less operation is enabled, signal output or status display can be provided in response to the servo system controller command as if the servo motor is actually running without the servo motor being connected.
Motor-less operation is performed as in motor-less operation using the setup software (SETUP161E).</td><td>0000h</td><td>PB24</td><td>Slight vibration suppression control
Used to select the slight vibration suppression control.
<table>
<tr><th>Setting digit</th><th>Explanation</th><th>Initial value</th></tr>
<tr><td>_ _ _ X</td><td>Slight vibration suppression control selection
0: Disabled
1: Enabled
To enable the slight vibration suppression control, select "Manual mode (_ _ _ 3)" under "Gain adjustment mode selection" in [Pr. PA08]. Slight vibration suppression control cannot be used in the speed control mode.</td><td>0h</td></tr>
</table></td><td>0000h</td></tr>
<tr><td></td><td></td><td></td><td>PC05</td><td>Function selection C-2
Set the motor-less operation.
<table>
<tr><th>Setting digit</th><th>Explanation</th><th>Initial value</th></tr>
<tr><td>_ _ _ X</td><td>Motor-less operation selection
0: Disabled
1: Enabled</td><td>0h</td></tr>
<tr><td>_ _ X _</td><td rowspan="3">For manufacturer setting</td><td>0h</td></tr>
<tr><td>_ X _ _</td><td>0h</td></tr>
<tr><td>X _ _ _</td><td>0h</td></tr>
</table></td><td>0000h</td></tr>
</table>

<table>
<tr><th colspan="3">MR-J2S-_B_</th><th colspan="3">MR-J4-_B_</th></tr>
<tr><th>No.</th><th>Name and function</th><th>Initial value</th><th>No.</th><th>Name and function</th><th>Initial value</th></tr>
<tr><td>25</td><td>Low-pass filter/adaptive vibration suppression control
Used to select the low-pass filter/adaptive vibration suppression control.

0

Low-pass filter selection
0: Available (Automatic adjustment)
1: Disabled
When available is selected, the filter in the zone expressed by the following formula is automatically set.

For 1 kW or less
$\frac{\text{VG2 setting value} \times 10}{2\pi \times (1 + \text{GD2 setting value} \times 0.1)}$ [Hz]

For 2 kW or more
$\frac{\text{VG2 setting value} \times 5}{2\pi \times (1 + \text{GD2 setting value} \times 0.1)}$ [Hz]

Adaptive vibration suppression control selection
0: Disabled
1: Enabled
Usually, machine resonance frequency is detected, and a filter corresponding to the resonance is generated to control the machine vibration.
2: Maintenance
Until then, detection of machine resonance is stopped by keeping the characteristics of the filter generated until that moment.

Adaptive vibration suppression control selection
Set the sensitiveness to detect the machine resonance.
0: Normal
1: High sensitive</td><td>0000h</td><td>PB23</td><td>Low-pass filter selection
Used to select the shaft resonance suppression filter.
<table><tr><th>Setting digit</th><th>Explanation</th><th>Initial value</th></tr><tr><td>_ _ _ X</td><td>Shaft resonance suppression filter selection
0: Automatic
1: Manual setting
2: Disabled
When "Enabled (_ _ _ 1)" in "Machine resonance suppression filter 4 selection" of [Pr. PB49] is selected, shaft resonance suppression filter cannot be used.</td><td>0h</td></tr></table></td><td>0000h</td></tr>
<tr><td></td><td></td><td></td><td></td><td>No corresponding parameter
(Machine resonance filters can be automatically adjusted with PB01.)</td><td></td></tr>
<tr><td>27</td><td>Analog monitor 1 offset
Used to set the offset voltage of Analog monitor 1 (MO1) output.</td><td>0</td><td>PC11</td><td>Analog monitor 1 offset
Used to set the offset voltage of MO1 (Analog monitor 1).</td><td>0</td></tr>
<tr><td>28</td><td>Analog monitor 2 offset
Used to set the offset voltage of Analog monitor 2 (MO2).</td><td>0</td><td>PC12</td><td>Analog monitor 2 offset
Used to set the offset voltage of MO2 (Analog monitor 2).</td><td>0</td></tr>
<tr><td>30</td><td>Zero speed
Used to set the output range of zero speed signal (ZSP).</td><td>50</td><td>PC07</td><td>Zero speed
Used to set the output range of ZSP (Zero speed detection).
ZSP (Zero speed detection) has the hysteresis of 20 [r/min] or 20 [mm/s]</td><td>50</td></tr>
<tr><td>31</td><td>Error excessive alarm level
Used to set the range where the excess droop pulse alarm is generated.
Note: The setting unit for servo amplifier of software version B1 or later is 0.025 rev. Note: The setting unit for servo amplifier before software version B1 is 0.1 rev.</td><td>80</td><td>PC01</td><td>Error excessive alarm level
Set error excessive alarm level.
The setting unit for rotary servo motor is "rev". If "0" is set, it becomes 3 rev. The setting value exceeding 200 rev will be clamped at 200 rev.</td><td>0</td></tr>
<tr><td></td><td></td><td></td><td>PC06</td><td>Function selection C-3
Used to select the setting unit for error excessive alarm level to be set in [Pr. PC01]. This parameter cannot be used in the speed control mode and torque control mode.
<table><tr><th>Setting digit</th><th>Explanation</th><th>Initial value</th></tr><tr><td>_ _ _ X</td><td rowspan="3">For manufacturer setting</td><td>0h</td></tr><tr><td>_ _ X _</td><td>0h</td></tr><tr><td>_ X _ _</td><td>0h</td></tr><tr><td>X _ _ _</td><td>Error excessive alarm level unit selection
0 : 1 rev (unit)
1 : 0.1 rev (unit)
2 : 0.01 rev (unit)
3 : 0.001 rev (unit)</td><td>0h</td></tr></table></td><td>0000h</td></tr>
</table>

MR-J2S-_B_			MR-J4-_B_		
No.	Name and function	Initial value	No.	Name and function	Initial value
32	Optional function 5 Used to select the PI-PID control switching. 0 0 0 _ └ PI-PID switching position droop 0: Continuous PI control enabled 1: Droop-based switching is enabled in position control mode (refer to parameter No. 34). 2: Continuous PID control enabled	0000	PB24	Slight vibration suppression control Used to select the PI-PID switching. Setting digit: _ _ _ X Explanation: PI-PID switching control selection 0: PI control enabled (Can be switched to PID control using the controller side command.) 3: Continuous PID control enabled Initial value: 0h Switching with PI-PID switching position droop is not possible.	0000h
33	Optional function 6 Used to select serial communication baud rate, serial communication response delay time, and encoder output pulse setting. 0 _ _ _ └ Serial communication baud rate selection 0: 9600[bps] 1: 19200[bps] 2: 38400[bps] 3: 57600[bps] └ Serial communication response delay time 0: Disabled 1: Enabled, reply sent after delay time of 800μs or more. └ Encoder output pulse setting selection (refer to parameter No. 38) 0: Output pulse specification 1: Division ratio setting	0000		No corresponding parameter (No serial communication function)	
			PC03	Encoder output pulses selection Used to select encoder output pulse setting. Setting digit: _ _ X _ Explanation: Encoder output pulse setting selection 0: Output pulse setting (When "_ 1 0 _" is set for this parameter, [AL.37 parameter error] occurs.) 1: Dividing ratio setting 3: A/B-phase pulse electronic gear setting 4: A/B-phase pulse through output setting The "4" setting is available only when using the A/B/Z-phase differential output linear encoder. In this case, the "encoder output pulse phase selection (_ _ _ X)" will be disabled. [AL.37 parameter error] occurs when another encoder is connected. If a standard control mode "(_ _ 0 _)" is selected in [Pr. PA01 operation mode], [AL.37 parameter error] occurs. Initial value: 0h	0000h
34	PI-PID switching position droop Set the amount of position droop (number of pulses) when the PI control is switched to PID control. When setting [Pr. 32] to "0001", this parameter is enabled.	0		No corresponding parameter	
36	Speed differential compensation Used to set the differential compensation value.	980	PB11	Speed differential compensation Used to set the differential compensation. This parameter is enabled when setting the "PI-PID switching control selection" of [Pr. PB24] to "continuous PID control enabled (_ _ 3 _)".	980
38	Encoder output pulses Used to set the encoder pulses (A-phase and B-phase) output by the servo amplifier. Set the value 4 times greater than the A-phase and B-phase pulses. [Pr. 33] can be used to choose the output pulse setting or output dividing ratio. The number of A-phase and B-phase pulses actually output is 1/4 times greater than the preset number of pulses. The maximum output frequency is 1.3 Mpulses/s (after multiplication by 4). Use this parameter within this range. • For output pulse designation Set [Pr. 33] to "_ 0 _ _" (initial value). Set the number of pulses per servo motor revolution. Output pulse = setting value [pulse/rev]. For instance, when "5600" is set, the actual output A- and B-phase pulses are as follows. Phase A/phase B output pulse = $\frac{5600}{4}$ = 1400 [pulses] • For output division ratio setting Set [Pr. 33] to "_ 1 _ _". The number of pulses per servo motor revolution is divided by the set value. Output pulse = $\frac{\text{Encoder resolution per servo motor revolution}}{\text{Setting value}}$ = [pulse/rev] For instance, when "8" is set, the actual output A- and B-phase pulses are as follows. Phase A/phase B output pulse = $\frac{131072}{8} \times \frac{1}{4}$ = 4096 [pulses]	4000	PA15	Encoder output pulse Set for the output pulse count, the dividing ratio, or the electronic gear ratio per rotation of the encoder output pulses output by the servo amplifier. (After multiplication of 4) Set the numerator of the electronic gear when "Phase A/phase B pulse electronic gear setting (_ _ 3 _)" is selected in "Encoder output pulse setting selection" of [Pr. PC03]. The maximum output frequency is 4.6 Mpulses/s. Set to within this range.	4000

<table>
<tr><th colspan="3">MR-J2S-_B_</th><th colspan="3">MR-J4-_B_</th></tr>
<tr><th>No.</th><th>Name and function</th><th>Initial value</th><th>No.</th><th>Name and function</th><th>Initial value</th></tr>
<tr>
<td>40</td>
<td>Parameter writing inhibit
<table>
<tr><th>Setting value</th><th>Setting value operation</th><th>Controller</th><th>MR Configurator Control by setup software</th></tr>
<tr><td rowspan="2">0000 (Initial value)</td><td>Refer to</td><td rowspan="2">[Pr. 1] to [Pr. 75]</td><td rowspan="2">[Pr. 1] to [Pr. 11]/[Pr. 40]</td></tr>
<tr><td>Write</td></tr>
<tr><td rowspan="2">000A</td><td>Refer to</td><td rowspan="2">[Pr. 1] to [Pr. 75]</td><td rowspan="2">[Pr. 40]</td></tr>
<tr><td>Write</td></tr>
<tr><td rowspan="2">000C</td><td>Refer to</td><td rowspan="2">[Pr. 1] to [Pr. 75]</td><td>[Pr. 1] to [Pr. 40]</td></tr>
<tr><td>Write</td><td>[Pr. 1] to [Pr. 11]/[Pr. 40]</td></tr>
<tr><td rowspan="2">000E</td><td>Refer to</td><td rowspan="2">[Pr. 1] to [Pr. 75]</td><td rowspan="2">[Pr. 1] to [Pr. 40]</td></tr>
<tr><td>Write</td></tr>
<tr><td rowspan="2">000F</td><td>Refer to</td><td rowspan="2">[Pr. 1] to [Pr. 75]</td><td rowspan="2">[Pr. 1] to [Pr. 75]</td></tr>
<tr><td>Write</td></tr>
<tr><td rowspan="2">100E</td><td>Refer to</td><td rowspan="2">[Pr. 1] to [Pr. 75]</td><td>[Pr. 1] to [Pr. 40]</td></tr>
<tr><td>Write</td><td>[Pr. 40]</td></tr>
</table>
</td>
<td>0000</td>
<td>PA19</td>
<td>Parameter writing inhibit
Used to select the reference range and writing range of parameters.
Refer to the table below for the setting value.
The setting values of [Pr. PA19] and the accessible parameters.
<table>
<tr><th>PA19</th><th>Operating setting values</th><th>PA</th><th>PB</th><th>PC</th><th>PD</th><th>PE</th><th>PF</th><th>PL</th></tr>
<tr><td rowspan="2">Other than the below</td><td>Read</td><td>○</td><td></td><td></td><td></td><td></td><td></td><td></td></tr>
<tr><td>Write</td><td>○</td><td></td><td></td><td></td><td></td><td></td><td></td></tr>
<tr><td rowspan="2">000Ah</td><td>Read</td><td>Only 19</td><td></td><td></td><td></td><td></td><td></td><td></td></tr>
<tr><td>Write</td><td>Only 19</td><td></td><td></td><td></td><td></td><td></td><td></td></tr>
<tr><td rowspan="2">000Bh</td><td>Read</td><td>○</td><td>○</td><td>○</td><td></td><td></td><td></td><td></td></tr>
<tr><td>Write</td><td>○</td><td>○</td><td>○</td><td></td><td></td><td></td><td></td></tr>
<tr><td rowspan="2">000Ch</td><td>Read</td><td>○</td><td>○</td><td>○</td><td>○</td><td></td><td></td><td></td></tr>
<tr><td>Write</td><td>○</td><td>○</td><td>○</td><td>○</td><td></td><td></td><td></td></tr>
<tr><td rowspan="2">000Fh</td><td>Read</td><td>○</td><td>○</td><td>○</td><td>○</td><td>○</td><td></td><td>○</td></tr>
<tr><td>Write</td><td>○</td><td>○</td><td>○</td><td>○</td><td>○</td><td></td><td>○</td></tr>
<tr><td rowspan="2">00AAh</td><td>Read</td><td>○</td><td>○</td><td>○</td><td>○</td><td>○</td><td>○</td><td></td></tr>
<tr><td>Write</td><td>○</td><td>○</td><td>○</td><td>○</td><td>○</td><td>○</td><td></td></tr>
<tr><td rowspan="2">00ABh (Initial value)</td><td>Read</td><td>○</td><td>○</td><td>○</td><td>○</td><td>○</td><td>○</td><td>○</td></tr>
<tr><td>Write</td><td>○</td><td>○</td><td>○</td><td>○</td><td>○</td><td>○</td><td>○</td></tr>
<tr><td rowspan="2">100Bh</td><td>Read</td><td>○</td><td></td><td></td><td></td><td></td><td></td><td></td></tr>
<tr><td>Write</td><td>Only 19</td><td></td><td></td><td></td><td></td><td></td><td></td></tr>
<tr><td rowspan="2">100Ch</td><td>Read</td><td>○</td><td>○</td><td>○</td><td>○</td><td></td><td></td><td></td></tr>
<tr><td>Write</td><td>Only 19</td><td></td><td></td><td></td><td></td><td></td><td></td></tr>
<tr><td rowspan="2">100Fh</td><td>Read</td><td>○</td><td>○</td><td>○</td><td>○</td><td>○</td><td></td><td>○</td></tr>
<tr><td>Write</td><td>Only 19</td><td></td><td></td><td></td><td></td><td></td><td></td></tr>
<tr><td rowspan="2">10AAh</td><td>Read</td><td>○</td><td>○</td><td>○</td><td>○</td><td>○</td><td>○</td><td></td></tr>
<tr><td>Write</td><td>Only 19</td><td></td><td></td><td></td><td></td><td></td><td></td></tr>
<tr><td rowspan="2">10ABh</td><td>Read</td><td>○</td><td>○</td><td>○</td><td>○</td><td>○</td><td>○</td><td>○</td></tr>
<tr><td>Write</td><td>Only 19</td><td></td><td></td><td></td><td></td><td></td><td></td></tr>
</table>
</td>
<td>00ABh</td>
</tr>
<tr>
<td>49</td>
<td>Gain switching selection
Used to select the gain switching condition.
0 0 0 _
└ Gain switching selection
Gain will be changed under the following conditions based on the setting value of parameters No. 52 to 55.
0: Disabled
1: Controller command
2: The appointed frequency is equal to or more than the setting value of parameter No. 50
3: The droop pulse is equal to or more than the setting value of parameter No. 50
4: The servo motor speed is equal to or more than the setting value of parameter No. 50</td>
<td>0000</td>
<td>PB26</td>
<td>Gain switching function
Used to select the gain switching condition.
Used to set a condition to enable the gain switching value that was set in [Pr. PB29] to [Pr. PB36] and [Pr. PB56] to [Pr. PB60].
<table>
<tr><th>Setting digit</th><th>Explanation</th><th>Initial value</th></tr>
<tr><td>_ _ _ X</td><td>Gain switching selection
0: Disabled
1: Control command from a controller is enabled
2: Command frequency
3: Pulse droop
4: Servo motor speed</td><td>0h</td></tr>
<tr><td>_ _ X _</td><td>Gain switching condition selection
0: Gain enabled after switching above the switching condition
1: Gain enabled after switching below the switching condition</td><td>0h</td></tr>
<tr><td>_ X _ _</td><td rowspan="2">For manufacturer setting</td><td>0h</td></tr>
<tr><td>X _ _ _</td><td>0h</td></tr>
</table>
</td>
<td>0000</td>
</tr>
<tr>
<td>50</td>
<td>Gain switching condition
Used to set the values for the gain switching conditions (command frequency, droop pulses, and servo motor speed) selected in [Pr. 49].
The set value unit differs depending on the switching condition item.</td>
<td>10</td>
<td>PB27</td>
<td>Gain switching condition
Used to set the values for the gain switching (command frequency, droop pulses, and servo motor speed) selected in [Pr. PB26].
The set value unit differs depending on the switching condition item.</td>
<td>10</td>
</tr>
<tr>
<td>51</td>
<td>Gain switching time constant
Used to set the time constant at which the gains will switch in response to the conditions set in [Pr. 49] and [Pr. 50].</td>
<td>1</td>
<td>PB28</td>
<td>Gain switching time constant
Used to set the time constant till the gain switches in response to the conditions set in [Pr. PB26] and [Pr. PB27].</td>
<td>1</td>
</tr>
<tr>
<td>52</td>
<td>Load to motor inertia ratio 2
Used to set the load to motor inertia ratio when gain switching is enabled.</td>
<td>7.0</td>
<td>PB29</td>
<td>Load to motor inertia ratio after gain switching.
Used to set the load to motor inertia ratio when gain switching is enabled.
This parameter is enabled only when "Manual mode (_ _ _ 3)" is selected in "Gain adjustment mode selection" of [Pr. PA08].</td>
<td>7.00</td>
</tr>
</table>

<table>
<tr><th colspan="3">MR-J2S-_B_</th><th colspan="3">MR-J4-_B_</th></tr>
<tr><th>No.</th><th>Name and function</th><th>Initial value</th><th>No.</th><th>Name and function</th><th>Initial value</th></tr>
<tr><td>53</td><td>Position loop gain 2 changing ratio
Used to set the changing ratio for position loop gain 2 when the gain switching is enabled.
This parameter is enabled when auto tuning is disabled.</td><td>100</td><td>PB30</td><td>Position loop gain after gain switching
Used to set the position loop gain when gain switching is enabled.
When a value smaller than 1.0 rad/s is set, the value will be the same as the setting value of [Pr. PB08].
This parameter is enabled only when "Manual mode (_ _ _ 3)" is selected in "Gain adjustment mode selection" of [Pr. PA08].</td><td>0.0</td></tr>
<tr><td>54</td><td>Speed loop gain 2 changing ratio
Used to set the changing ratio for speed loop gain 2 when the gain switching is enabled.
This parameter is enabled when auto tuning is disabled.</td><td>100</td><td>PB31</td><td>Speed loop gain after gain switching
Used to set the speed loop gain when gain switching is enabled.
When a value smaller than 20 rad/s is set, the value will be the same as the setting value of [Pr. PB09].
This parameter is enabled only when "Manual mode (_ _ _ 3)" is selected in "Gain adjustment mode selection" of [Pr. PA08].</td><td>0</td></tr>
<tr><td>55</td><td>Speed integral compensation changing ratio
Used to set the changing ratio for speed integral compensation when the gain switching is enabled.
This parameter is enabled when auto tuning is disabled.</td><td>100</td><td>PB32</td><td>Speed integral compensation after gain switching
Used to set the speed integral compensation when gain switching is enabled.
When a value smaller than 0.1 ms set, the value will be the same as the setting value of [Pr. PB10].
This parameter is enabled only when "Manual mode (_ _ _ 3)" is selected in "Gain adjustment mode selection" of [Pr. PA08].</td><td>0.0</td></tr>
<tr><td>60</td><td>Option function C
Used to select an encoder output pulse direction.
0 _ 0 0
Change in encoder pulse output phase
Changes the positions of the pulse output A-phase and B-phase of the encoder.
<table>
<tr><th rowspan="2">Setting value</th><th colspan="2">Servo motor rotation direction</th></tr>
<tr><th>CCW</th><th>CW</th></tr>
<tr><td>0</td><td>A phase
B phase</td><td>A phase
B phase</td></tr>
<tr><td>1</td><td>A phase
B phase</td><td>A phase
B phase</td></tr>
</table></td><td>0000</td><td>PC03</td><td>Encoder output pulses selection
Used to select the encoder pulse direction.
<table>
<tr><th>Setting digit</th><th>Explanation</th><th>Initial value</th></tr>
<tr><td>_ _ _ X</td><td>Encoder output pulse phase selection
0: Phase A 90° lead in CCW or forward direction
1: Phase A 90° lead in CW or negative direction
<table>
<tr><th rowspan="2">Setting value</th><th colspan="2">Servo motor rotation direction</th></tr>
<tr><th>CCW</th><th>CW</th></tr>
<tr><td>0</td><td>A-phase
B-phase</td><td>A-phase
B-phase</td></tr>
<tr><td>1</td><td>A-phase
B-phase</td><td>A-phase
B-phase</td></tr>
</table></td><td>0h</td></tr>
</table></td><td>0000h</td></tr>
<tr><td>61</td><td>Machine resonance suppression filter 2
Select the machine resonance suppression filter.
0 _ _ _
Notch frequency selection
Set "00" when the active vibration suppression control is set as "effective" or "maintain" (parameter No. 25:_ 1 _ _ or _ 2 _ _).
<table>
<tr><th>Setting value</th><th>Frequency</th><th>Setting value</th><th>Frequency</th><th>Setting value</th><th>Frequency</th><th>Setting value</th><th>Frequency</th></tr>
<tr><td>00</td><td>Disabled</td><td>08</td><td>562.5</td><td>10</td><td>281.3</td><td>18</td><td>187.5</td></tr>
<tr><td>01</td><td>4500</td><td>09</td><td>500</td><td>11</td><td>264.7</td><td>19</td><td>180</td></tr>
<tr><td>02</td><td>2250</td><td>0A</td><td>450</td><td>12</td><td>250</td><td>1A</td><td>173.1</td></tr>
<tr><td>03</td><td>1500</td><td>0B</td><td>409.1</td><td>13</td><td>236.8</td><td>1B</td><td>166.7</td></tr>
<tr><td>04</td><td>1125</td><td>0C</td><td>375</td><td>14</td><td>225</td><td>1C</td><td>160.1</td></tr>
<tr><td>05</td><td>900</td><td>0D</td><td>346.2</td><td>15</td><td>214.3</td><td>1D</td><td>155.2</td></tr>
<tr><td>06</td><td>750</td><td>0E</td><td>321.4</td><td>16</td><td>204.5</td><td>1E</td><td>150</td></tr>
<tr><td>07</td><td>642.9</td><td>0F</td><td>300</td><td>17</td><td>195.7</td><td>1F</td><td>145.2</td></tr>
</table>
Notch depth selection
<table>
<tr><th>Setting value</th><th>Response</th><th>Gain</th></tr>
<tr><td>0</td><td rowspan="4">Deep
to
Shallow</td><td>-40dB</td></tr>
<tr><td>1</td><td>-14dB</td></tr>
<tr><td>2</td><td>-8dB</td></tr>
<tr><td>3</td><td>-4dB</td></tr>
</table></td><td>0000</td><td>PB15</td><td>Machine resonance suppression filter 2
Used to set the notch frequency of machine resonance suppression filter 2.
When "Enabled (_ _ _ 1)" in "Machine resonance suppression filter 2 selection" of [Pr. PB16] is selected, this parameter is enabled.</td><td>4500</td></tr>
<tr><td></td><td></td><td></td><td>PB16</td><td>Notch shape selection 2
Used to set the shape of the machine resonance suppression filter 2.
<table>
<tr><th>Setting digit</th><th>Explanation</th><th>Initial value</th></tr>
<tr><td>_ _ _ X</td><td>Machine resonance suppression filter 2 selection
0: Disabled
1: Enabled</td><td>0h</td></tr>
<tr><td>_ _ X _</td><td>Notch depth selection
0: -40 dB
1: -14 dB
2: -8 dB
3: -4 dB</td><td>0h</td></tr>
<tr><td>_ X _ _</td><td>Notch width selection
0: α=2
1: α=3
2: α=4
3: α=5</td><td>0h</td></tr>
<tr><td>X _ _ _</td><td>For manufacturer setting</td><td>0h</td></tr>
</table></td><td>0000h</td></tr>
</table>

3.8 Important Points for Replacement

(1) When the intermediate connection axis network is OFF, the network of the subsequent axis is not connected
Even if alarm has occurred, do not switch off the control circuit power supply. When the control circuit power supply has been switched off, optical module does not operate, and optical transmission of SSCNET III/H communication is interrupted. Therefore, the next axis servo amplifier displays "AA" at the indicator and turns into base circuit shut-off. The servo motor stops with starting dynamic brake.

MEMO

Part 4
Review on Replacement of MR-J2S-_CP_/CL_ with MR-J4-_A_-RJ

Part 4: Review on Replacement of MR-J2S-_CP_/CL_ with MR-J4-_A_-RJ

1. SUMMARY

This section describes the changes to be made when a system using MR-J2S-_CP_/CL_ is replaced with a system using MR-J4-_A_-RJ.

2. CASE STUDY ON REPLACEMENT OF MR-J2S-_CP_/CL_

2.1 Consideration of Replacement Method

POINT
●MR-J2S-_CP_/CL_ cannot drive an HG motor. When a servo motor is replaced with an HG motor, servo amplifier also needs to be replaced with MR-J4-_A_-RJ + HG simultaneously.

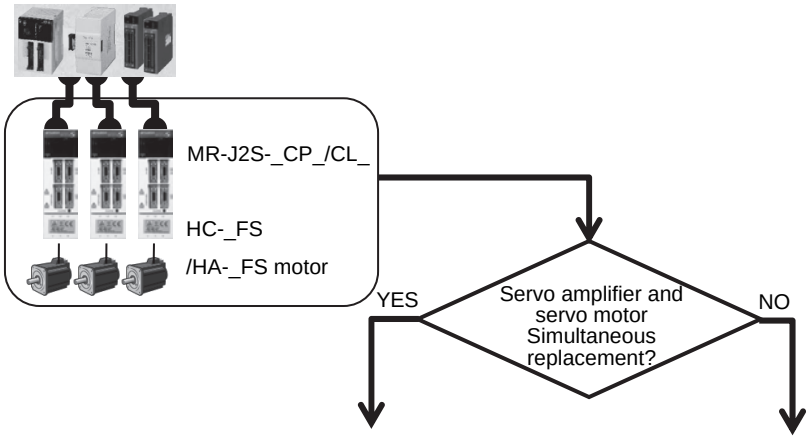

(1) Simultaneous replacement with MR-J4-_A_-RJ and an HG motor
Although heavier burdens including a longer construction period need to be borne, once replaced the system can be operated for a long period of time. (Refer to Section 2.2 (1).)

(2) Separate repair of servo amplifiers is available. (Note 1, Note 2)
Existing wiring can be used by using the renewal tool. (Refer to Section 2.2 (2).)

Note 1. Separate repair means replacement.
2. No "renewal tool" is available for MR-J2S-_CL_.

2.2 Replacement Method

(1) Simultaneous replacement with MR-J4-_A_RJ and an HG motor
The currently used connectors or cables need to be replaced. The parameters of the existing system can be transferred with the parameter converter function of MR Configurator2. (Refer to "Part 7: Common Reference Material".)

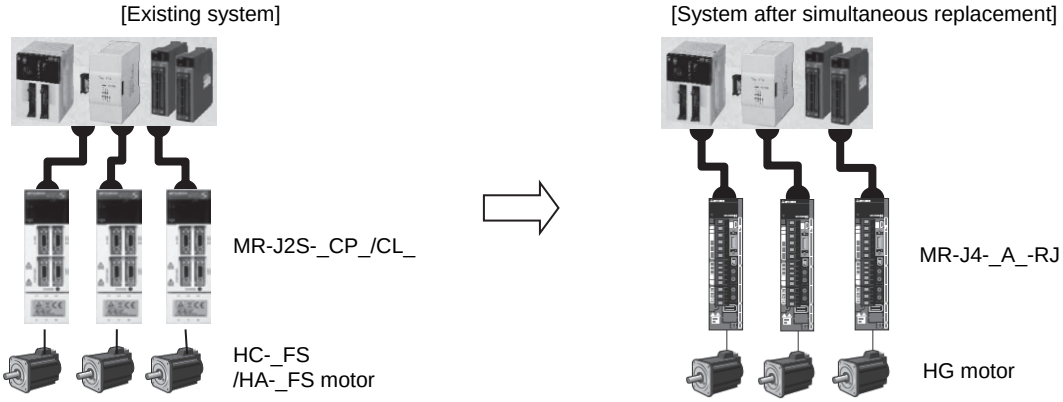

(2) Separate repair of servo amplifier/servo motor

POINT

- MR-J2S-_CP_/CL_ cannot drive an HG motor. When a servo motor is replaced with an HG motor, servo amplifier also needs to be replaced with MR-J4-_A_RJ + HG simultaneously.
- If the existing system is any of the combinations in the following table, it is recommended to replace both the servo amplifier and servo motor with an MR-J4-_A_-RJ and HG motor at the same time. When an HG motor is adopted, the capacity of the servo amplifier needs to be changed. (Consider replacement, referring to "torque characteristics" described in "Part 8: Replacement of Motor".)

Existing device models		Replacement models for simultaneous replacement (example)	
Servo motor	Servo amplifier	Servo motor	Servo amplifier
HC-LFS52	MR-J2S-60CP/CL	HG-JR73	MR-J4-70A-RJ
HC-LFS102	MR-J2S-100CP/CL	HG-JR153	MR-J4-200A-RJ
HC-LFS152	MR-J2S-200CP/CL	HG-JR353	MR-J4-350A-RJ
HC-KFS46	MR-J2S-70CP/CL	HG-KR43	MR-J4-40A-RJ
HC-KFS410	MR-J2S-70CP/CL	HG-KR43	MR-J4-40A-RJ
HC-RFS103(B)G2 1/_	MR-J2S-200CP/CL	HG-SR102(B)G7 1/_	MR-J4-100A-RJ
HC-RFS203(B)G2 1/_	MR-J2S-350CP/CL	HG-SR202(B)G7 1/_	MR-J4-200A-RJ
HC-RFS353(B)G2 1/_	MR-J2S-500CP/CL	HG-SR352(B)G7 1/_	MR-J4-350A-RJ
HC-RFS103(B)G5 1/_	MR-J2S-200CP/CL	HG-SR102(B)G5 1/_	MR-J4-100A-RJ
HC-RFS203(B)G5 1/_	MR-J2S-350CP/CL	HG-SR202(B)G5 1/_	MR-J4-200A-RJ
HC-RFS353(B)G5 1/_	MR-J2S-500CP/CL	HG-SR352(B)G5 1/_	MR-J4-350A-RJ
HC-RFS103(B)G7 1/_	MR-J2S-200CP/CL	HG-SR102(B)G7 1/_	MR-J4-100A-RJ
HC-RFS203(B)G7 1/_	MR-J2S-350CP/CL	HG-SR202(B)G7 1/_	MR-J4-200A-RJ
HC-RFS353(B)G7 1/_	MR-J2S-500CP/CL	HG-SR352(B)G7 1/_	MR-J4-350A-RJ

After replacement, an HC-_FS /HA-_FS motor can be driven by MR-J4-_A_-RJ. Refer to "Part 7: Common Reference Material" for target motors.
Use the renewal tool when replacing a servo amplifier with MR-J4-_A_-RJ without replacing the currently used servo motor and existing cables. (Refer to "[Appendix 2] Introduction to Renewal Tool".)
The parameters of the existing system can be transferred with the parameter converter function of MR Configurator2. (Refer to "Part 7: Common Reference Material".)

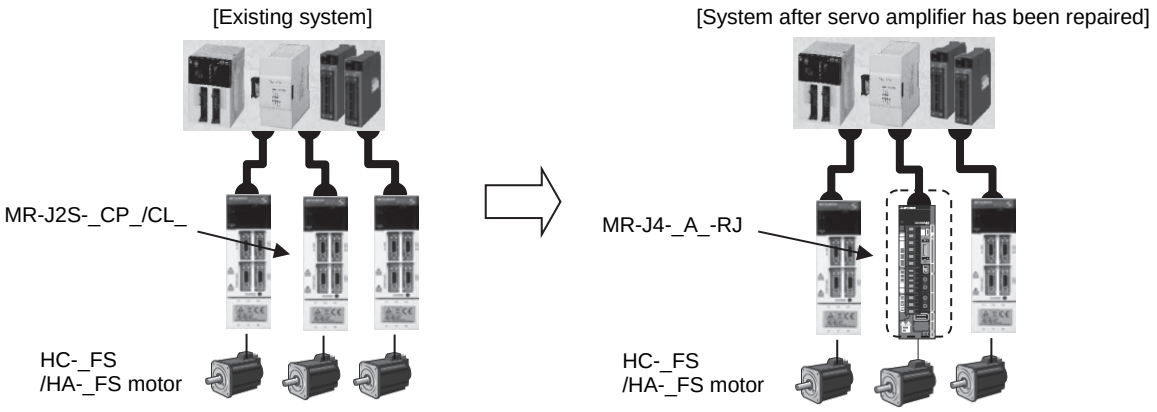

3. DIFFERENCES

3.1 Function Comparison Table

POINT

●Functions with difference are shown with shading.

(1) Comparison between MR-J2S-_CP_/CL_ and MR-J4-_A_-RJ

Item		MR-J2S-_CP_/CL_ series (7 kW or less, 100 V/200 V class)	MR-J4-_A_-RJ series (7 kW or less, 100 V/200 V class)
1	Capacity range	(100 V class) 0.1 kW to 0.4 kW (200 V class) 0.1 kW to 7 kW	(100 V class) 0.1 kW to 0.4 kW (200 V class) 0.1 kW to 7 kW
2	Internal regenerative resistor	Built-in (0.2 kW to 7 kW)	Built-in (0.2 kW to 7 kW)
3	Dynamic brake	Built-in (0.1 kW to 7 kW)	Built-in (0.1 kW to 7 kW) Coasting distance may be different.
4	Control circuit power	(100 V Class) 1-phase 100 V AC to 120 V AC (200 V Class) 1-phase 200 V AC to 230 V AC	(100 V Class) 1-phase 100 V AC to 120 V AC (200 V Class) 1-phase 200 V AC to 240 V AC
5	Main circuit power	(100 V Class) 1-phase 100 V AC to 120 V AC (200 V Class) 1-phase 230 V AC/3-phase 200 V AC to 230 V AC (to 750 W) 3-phase 200 V AC to 230 V AC (1 kW to 7 kW)	(100 V Class) 1-phase 100 V AC to 120 V AC (200 V Class) 1-phase/3-phase 200 V AC to 240 V AC (to 750 W) 3-phase 200 V AC to 240 V AC (1 kW to 7 kW)
6	24 V DC power	Built-in	External supply required
7	Auto Tuning	Real-time auto tuning: 15 steps	Real-time auto tuning: 40 steps One-touch tuning
8	Control mode	(CP) Built-in positioning function (CL) Built-in program operation function	(CP) Built-in positioning function Built-in program operation function Position control mode (pulse command) Speed control mode (analog command) Torque control mode (analog command)
9	Manual pulse generator maximum input pulse	Open collector 200 kpulses/s	Open collector 200 kpulses/s
10	The number of DIO points (excluding EM1)	DI: 8 points, DO: 5 points, DI/DO combination: 1 point	DI: 11 points, DO: 8 points
11	Encoder pulse output	ABZ-phase (differential line driver) Z-phase (open-collector)	ABZ-phase (differential line driver) Z-phase (open-collector)
12	DIO interface	Input: Sink/source Output: Sink	Input: Sink/source Output: Sink/source
13	Analog input/output	(Input) 2ch 10-bit torque limit, 10-bit override (Output) 10-bit or equivalent x 2ch	(Input) 2 ch 10-bit torque limit, 10-bit override or equivalent (Output) 10-bit or equivalent x 2ch
14	The number of internal speed commands	7 points	7 points
15	Parameter setting method	Setup software (SETUP161E) Push-button	MR Configurator2 Push-button parameter unit
16	Setup software communication	RS-232C	USB
17	Servo motor (Encoder resolution)	HC-_FS series (17-bit ABS) HA-_FS series (17-bit ABS)	HG series (**22**-bit ABS)
18	Motor maximum torque	HC-KFS 300%	HG-KR 350%(models with a gear: 300%)
		HC-MFS 300%	HG-MR 300%
		HC-SFS 300%	HG-SR 300%
		HA-LFS 250%, 300%	HG-JR 300%
19	button	Four buttons	Four buttons
20	LED display	7-segment 5-digit	7-segment 5-digit
21	Advanced vibration suppression control	Unprovided	Provided
22	Adaptive filter	Provided (Adaptive vibration suppression control)	Provided (Adaptive filter II with improved functions)
23	Notch filter	Provided (2 pcs.)	Provided (5 pcs.)
24	Tough drive	Unprovided	Provided
25	Drive recorder	Unprovided	Provided
26	Forced stop	EM1 (DB stop)	EM1 (DB stop)/EM2 (deceleration stop) optional
27	Point table No.	(CP) up to 31	up to 255
28	Program No.	(CL) up to 16 programs (120 steps)	up to 256 programs (640 steps)
29	Position data unit	mm	mm/degree/inch/pulse
30	Program language Command	TIM(Dwell)Unit × 10 ms	TIM(Dwell)Unit ms

(2) Positioning function comparison

Item			Model		
			MR-J2S-_CP_	MR-J2S-_CL_	MR-J4-_A_-RJ
Command method		Point table	up to 31		up to 255
		Program end		up to 16 programs (120 steps)	up to 256 programs (640 steps)
		RS-422 communication (Sequential change method)	○	○	○
		feed length	-999999 to +999999 × 10^{STM} [μm]	-999999 to +999999 × 10^{STM} [μm]	-999999 to +999999 × 10^{STM} [μm] (Note 2)
		Command method	Signed absolute value command, incremental value command	Signed absolute value command, incremental value command	Signed absolute value command, incremental value command
		Position data unit	mm	mm	mm/degree /inch/pulse
Operation Mode	Automatic operation	Standalone positioning operation	○	○	○
		Continuous positioning operation	○	○	○ (CP/CL)
	Manual operation	JOG operation	○	○	○
		Manual pulse generator operation	○ (Multiplication input supported, multiplication parameter supported)	○ (Multiplication input supported, multiplication parameter supported)	○ (Multiplication input supported, multiplication parameter supported)
	Home position return	Dog type	○	○	○ (CP/CL)
		Count type	○	○	○ (CP/CL)
		Data set type	○	○	○ (CP/CL)
		Stopper type	○	○	○ (CP/CL)
		Home position ignorance (servo-on position as home position)	○	○	○ (CP/CL)
		Dog type rear end reference	○	○	○ (CP/CL)
		Count type front end reference	○	○	○ (CP/CL)
		Dog cradle type	○	○	○ (CP/CL)
		Dog type last Z-phase reference	○	×	○ (CP/CL)
		Dog type rear end reference	○	×	○ (CP/CL)
		Dogless Z-phase reference	○	×	○ (CP/CL)
		Stopper type Z-phase reference	×	×	○ (CP/CL)
		Fast home position return	○	×	○ (CP only)
7-segment LED status display		Point table No.	○		○
		Program No.		○	○
		Step No.		○	○

Item		Type		
		MR-J2S-_CP_	MR-J2S-_CL_	MR-J4-_A_-RJ
Positioning function	Absolute position detection	○	○	○
	Backlash compensation	○	○	○
	Overtravel prevention with external limit switch	○	○	○
	Software stroke limit	○	○	○
	Override with analog input	○	○	○ (CP/CL)
	Teaching function	○	×	○
	General purpose register		○ 4 (RAM) 4 (EEPROM)	○ 4 (RAM) 4 (EEPROM)
	Roll feed display	×	×	○
	Temporary stop/restart	○	○	○ (CP/CL)
	Mark detection function (Current position latch function)	×	×	○ (CP/CL)

Note 1. The symbols in the type field of this table are as follows:
CP : Point table method, CL : Program method
○: Supported, ×: Not supported, ＼: No function
2. Units can be switched using parameters.

3.2 Function List

(1) Function List

function	Description	Control mode (Note)	
		CP	CL
Positioning mode (Point table method)	Select the predefined 255 point tables, and operate them according to the setting values. Use external input signals or communication functions to select point tables.	○	×
Positioning mode (Program method)	Select one from the predefined 256 programs, and operate it according to the program content. Use external input signals or communication functions to select programs.	×	○
Roll feed display function	Set the status display of commanded position and current position at the start to "0", and perform positioning for the defined travel distance.	○	○
Mark detection function (Current position latch function)	Mark detection signal is turned on, the current position is latched. Latched data can be read using a communication command.	○	○
Manual home position return	Dog type, count type, data set type, stopper type, home position ignorance, dog type rear end reference, count type front end reference, dog cradle type, dog type last Z-phase reference, Dogless Z-phase reference	○	○
High-resolution encoder	A high-resolution encoder capable of 4194304 pulses/rev is used as the encoder for the rotary servo motor compatible with the MELSERVO-J4 series.	○	○
Absolute position detection system	By setting the home position once, it will be unnecessary to return to the home position each time the power is turned on.	○	○
Gain Switching Function	Gain can be switched during rotation and when stopped, and also when using the input device during the operation.	○	○
Advanced vibration suppression control II	This function controls residual vibration or vibration at the end of the arm.	○	○
Shaft resonance suppression filter	When a load is put on the servo motor shaft, a high-frequency machine vibration may be generated due to resonance caused by shaft torsion while the servo motor is being driven. The shaft resonance suppression filter is the filter that controls this vibration.	○	○
Adaptive filter II	With this function, the servo amplifier detects machine resonance and sets filter properties automatically, and then controls the vibration of the machine system.	○	○
Low-pass filter	When a servo system response is raised, it suppresses the high-frequency resonance generated.	○	○
Machine analyzer function	The frequency properties of the machine system are analyzed by only connecting the servo amplifier and the personal computer where MR Configurator2 is installed. MR Configurator2 is necessary for this function.	○	○
Robust filter	If it is not possible to raise the response because the load to motor inertia ratio is high due to the roll feed shaft, etc., the disturbance response can be improved.	○	○
Slight Vibration Suppression Control	A vibration of ±1 pulse is suppressed when the servo motor stops.	○	○
Electronic gear	Position command can be set to 1/864-33935 times.	○	○
Auto Tuning	Automatically adjusts the optimum servo gain even if the load applied on the servo motor shaft changes.	○	○
Brake unit	Used when there is insufficient regenerative ability in the regenerative option. 5 kW or higher servo amplifier can be used.	○	○
Power regeneration converter	Used when there is insufficient regenerative ability in the regenerative option. 5 kW or higher servo amplifier can be used.	○	○
Regenerative options	Used when the generated regenerative power is high and there is insufficient regenerative ability in the internal regenerative resistor of servo amplifier.	○	○
Alarm History Clear	Deletes the alarm history.	○	○
Input signal selection (device settings)	Input devices such as ST1 (forward rotation start), ST2 (reverse rotation start), and SON (servo-on) can be assigned to a specific CN1 connector pin.	○	○
Output signal selection (device settings)	Output devices such as MBR (electromagnetic brake interlock) can be assigned to a specific CN1 connector pin.	○	○
Output signal (DO) forced output	Output signals can be turned on/off forcibly regardless of the status of the servo. Use for output signal wiring checks, etc.	○	○
Command pulse selection	Phase A/phase B pulse train	○	○
Torque limit	The servo motor torque can be limited.	○	○
Status display	The servo status is displayed on the 5-digit, 7-segment LED indicator.	○	○

function	Description	Control mode (Note)	
		CP	CL
External I/O signal display	The on/off statuses of external I/O signals are displayed on the display.	○	○
VC automatic offset	If the motor does not stop even when the VC (analog speed command) or VLA (analog speed limit) is 0 V, the voltage is automatically offset to stop it.	○	○
Alarm code output	When an alarm occurs, an alarm number is output in 3-bit code.	○	○
Test operation mode	Jog operation, positioning operation, motor-less operation, DO forced output, and program operation. When performing positioning operation, program operation, and single-step feed, MR Configurator2 is required.	○	○
Analog monitor output	The voltage is output in real time for the servo status.	○	○
MR Configurator2	Parameter setting, test operation, monitoring, etc., can be performed using a personal computer.	○	○
Linear servo system	Linear servo motor and linear encoder can be used to construct the linear servo system.	○	○
Direct drive Servo system	Direct drive servo system that drives direct drive motors can be constructed.	○	○
Fully closed loop system	Load side encoder can be used to construct the fully closed loop system.	○	○
One-touch tuning	Gain adjustment of the servo amplifier is possible only by operation of the push button or by one click of the button on MR Configurator2.	○	○
SEMI-F47 function	By complying with the SEMI-F47 standard, even when an instantaneous power failure occurs during the operation, the electrical energy charged in the capacitor can be used to avoid the occurrence of [AL.10 Undervoltage]	○	○
Tough drive function	It is usually possible to continue operation so that the device does not stop even when alarm is about to occur. There are two types of tough drive functions, vibration tough drive and instantaneous power failure tough drive.	○	○
Drive recorder function	By always monitoring the servo status, this function allows fixed time recording of status transitions before and after an alarm occurs. The recorded data can be checked by clicking the wave-form display button on the drive recorder screen of MR Configurator2. However, in the following statuses, the drive recorder will not operate. 1. When the MR Configurator2 graph function is in use. 2. When the machine analyzer function is in use. 3. When [Pr. PF21] is set to "-1".	○	○
STO function	The STO functions are available as IEC/EN 61800-5-2 safety functions. A device safety system can be easily constructed.	○	○
Servo amplifier life diagnosis function	The accumulated energization time and the number of times the burst relay is turned on and off can be checked. This acts as a measure of time if servo amplifier parts such as capacitor and relay need to be replaced according to their life expectancies before malfunctioning. MR Configurator2 is necessary for this function.	○	○
Power monitoring function	The power running power and regenerative power are calculated from data in the servo amplifier, including speed and current. Power consumption, etc., can be displayed in MR Configurator2.	○	○
Machine diagnosis function	Faulty machine parts such as ball screws and bearings can be detected by presuming friction and vibration elements of the device actuator from data in the servo amplifier. MR Configurator2 is necessary for this function.	○	○
Limit switch	Forward rotation stroke end (LSP) and reverse rotation stroke end (LSN) can be used to limit the travel distance of servo motor.	○	○
S-pattern acceleration/deceleration	Smooth acceleration/deceleration is possible. Set the S-pattern acceleration/deceleration time constants in [Pr. PC03]. Compared with linear acceleration/deceleration time, the acceleration/deceleration time will be longer by the magnitude of S-pattern acceleration/deceleration time constant regardless of commanded speed.	○	○
Software limit	A parameter can be used to limit the travel distance based on addresses. Use a parameter to set a function equivalent to the limit switch.	○	○
Analog override	Limit the servo motor speed with analog input. The setting speed can be changed within the range of 0 to 200%.	○	○
Teaching function	After moving to the target location by JOG operation or manual pulse generator operation, the position data can be retrieved by turning on the teach (TCH) or "set" key on the controller.	○	×

Note. CP: positioning mode (point table method), CL: positioning mode (program method)

3.3 Comparison of Standard Connection Diagrams

(1) Point table method (MR-J2S-_CP_)

MR-J2S-_CP_	MR-J4-_A_-RJ
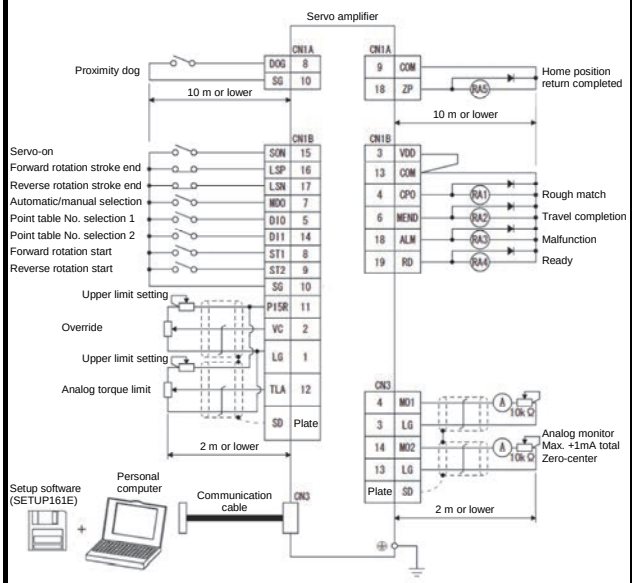	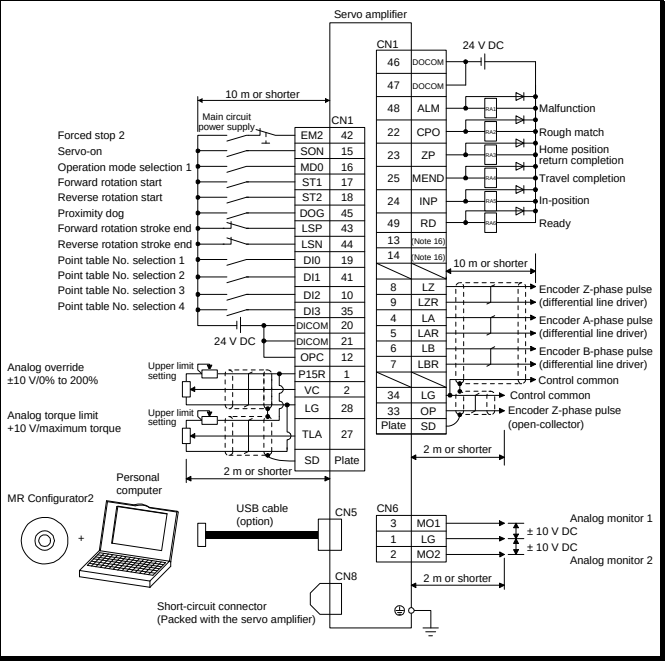

POINT

- Allocate the following output devices to pin CN1-22, pin CN1-23, and pin CN1-25 with [Pr. PD23], [Pr. PD24] and [Pr. PD26].
  CN1-22: CPO (Rough match)
  CN1-23: ZP (Home position return completion)
  CN1-25: MEND (Travel completion)

(2) Program method (MR-J2S-_CL_)

MR-J2S-_CL_	MR-J4-_A_-RJ
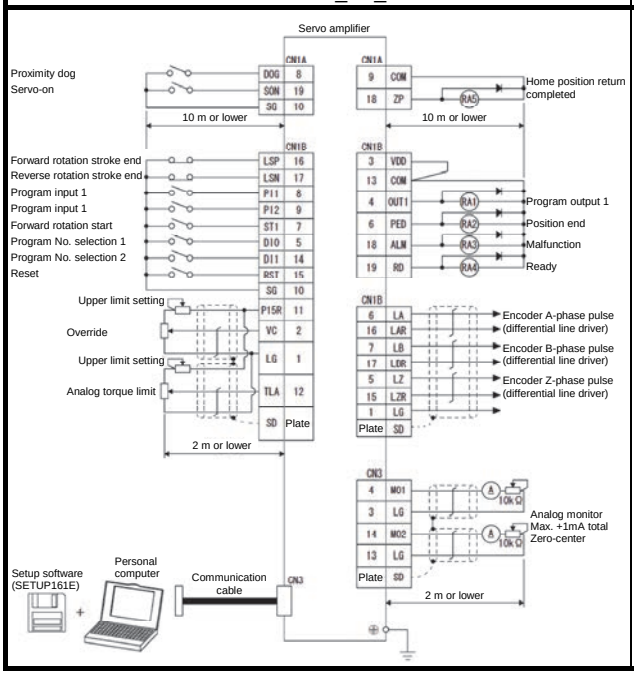	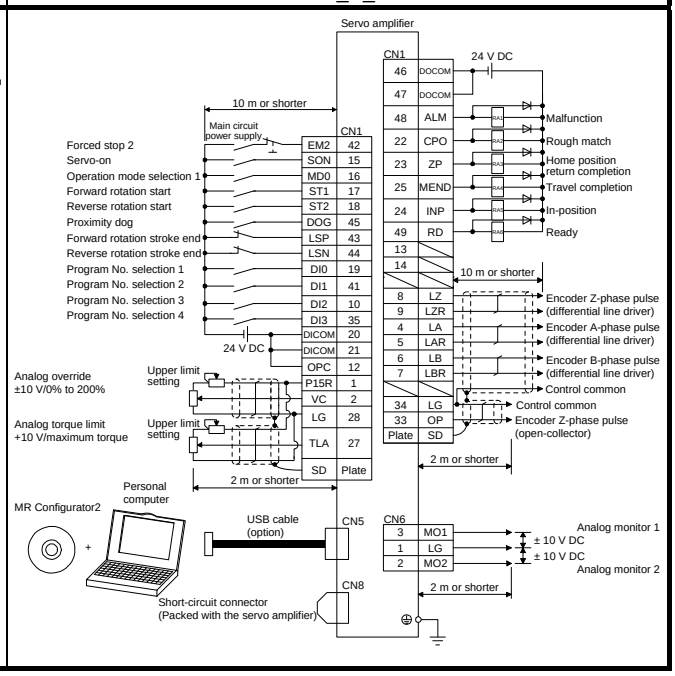

POINT

●Allocate the following output devices to pin CN1-22, pin CN1-23, and pin CN1-25 with [Pr. PD23], [Pr. PD24] and [Pr. PD26].

CN1-22: CPO (Rough match)

CN1-23: ZP (Home position return completion)

CN1-25: MEND (Travel completion)

3.4 List of Corresponding Connectors and Terminal Blocks

(1) Connector comparison table

An example of connections with the peripheral equipment is shown below. For details on signals, refer to each servo amplifier instruction manual.

MR-J2S-_CP_/CL_	MR-J4-_A_-RJ
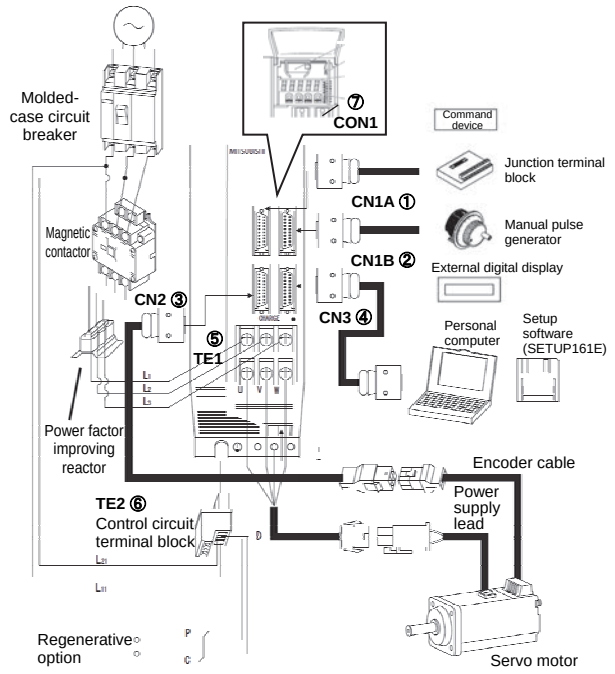	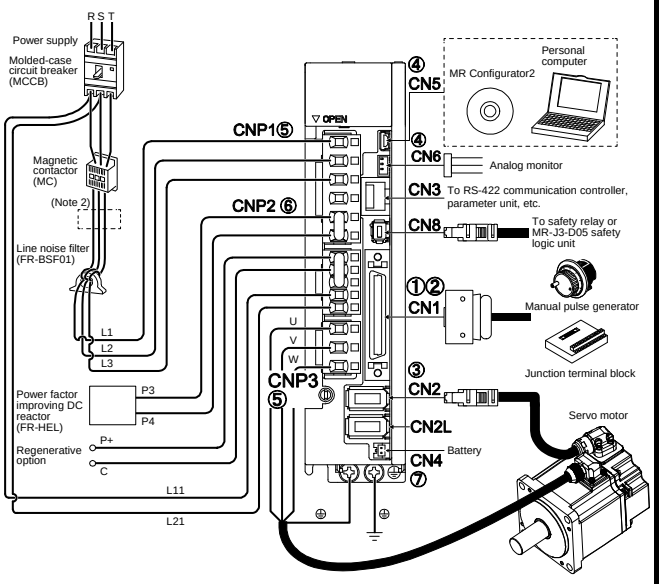
Note 1. The diagram shows an example of MR-J2S-100CP/CL or less.	Note 1. The diagram shows an example of MR-J4-200A-RJ or less. 2. The power factor improving AC reactor can also be used. In this case, the power factor improving DC reactor cannot be used.

(2) List of connector and terminal block correspondence

	MR-J2S-_CP_/CL_			MR-J4-_A_-RJ		Precautions
①	I/O signal connector	[CN1A]		I/O signal connector	[CN1]	Prepare a new cable.
②	I/O signal connector	[CN1B]				
③	Encoder connector	[CN2]		Encoder connector	[CN2]	Must switch to encoder cable (option) or prepare a new cable.
④	Communication connector [CN3]	PC connection (Note 1)	→	USB communication connector	[CN5]	Must switch to USB cable (option). (Note)
		Analog monitor		Analog monitor connector	[CN6]	Must switch to monitor cable (option).
⑤	Main circuit terminal block [TE1]	Input power supply		Main circuit power connector	[CNP1]	Must switch to the power connector (enclosed with the servo amplifier).
		Servo motor power supply		Servo motor power connector	[CNP3]	
⑥	Control circuit terminal block		[TE2]	Control circuit power connector	[CNP2]	
⑦	Battery connector		[CON1]	Battery connector	[CN4]	Prepare a new battery.

Note. When using the multi-dropped communication, connect to "CN3" in "MR-J4-_A_-RJ".

When not using the STO function in MR-J4-_A_-RJ, attach the short-circuit connector supplied with the servo amplifier to CN8 (STO input signal connector).

The configuration of the main circuit terminal block differs depending on the capacity. Refer to "Part 7: Common Reference Material".

(3) Comparison of signals

(a) CN1A/CN1B

1) Point table method (MR-J2S-_CP_)

MR-J2S-_CP_		Signal abbreviation (Note 1)	MR-J4-_A_-RJ	
Connector pin assignment	Connector pin No.		Connector pin No.	Connector pin assignment
CN1A 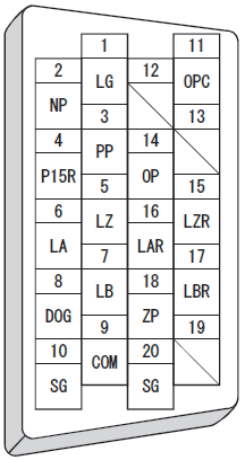	CN1A-1	LG	CN1-3 CN1-28	CN1 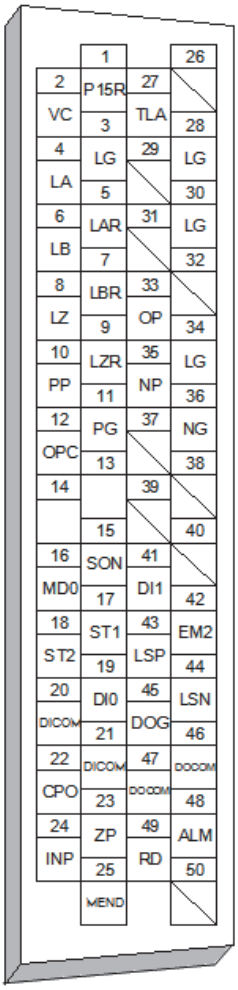
	CN1A-2	NP	CN1-35 (Note 2)	
	CN1A-3	PP	CN1-10 (Note 2)	
	CN1A-4	P15R	CN1-1	
	CN1A-5	LZ	CN1-8	
	CN1A-6	LA	CN1-4	
	CN1A-7	LB	CN1-6	
	CN1A-8	DOG	CN1-45	
	CN1A-9	COM (DICOM)	CN1-20	
	CN1A-10	SG (DOCOM)	CN1-46	
	CN1A-11	OPC	CN1-12	
	CN1A-12	-	-	
	CN1A-13	-	-	
	CN1A-14	OP	CN1-33	
	CN1A-15	LZR	CN1-9	
	CN1A-16	LAR	CN1-5	
	CN1A-17	LBR	CN1-7	
	CN1A-18	ZP	CN1-23 (Note 3)	
	CN1A-19	-	-	
	CN1A-20	SG (DOCOM)	CN1-47	
CN1B 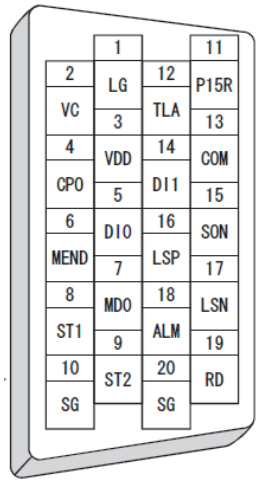	CN1B-1	LG	CN1-30 CN1-34	
	CN1B-2	VC	CN1-2	
	CN1B-3	VDD	-	
	CN1B-4	CPO	CN1-22	
	CN1B-5	DI0	CN1-19	
	CN1B-6	MEND	CN1-25	
	CN1B-7	MD0	CN1-16	
	CN1B-8	ST1	CN1-17	
	CN1B-9	ST2	CN1-18	
	CN1B-10	SG (DOCOM)	CN1-46	
	CN1B-11	P15R	CN1-1	
	CN1B-12	TLA	CN1-27	
	CN1B-13	COM (DICOM)	CN1-21	
	CN1B-14	DI1	CN1-41	
	CN1B-15	SON	CN1-15	
	CN1B-16	LSP	CN1-43	
	CN1B-17	LSN	CN1-44	
	CN1B-18	ALM	CN1-48	
	CN1B-19	RD	CN1-49	
	CN1B-20	SG (DOCOM)	CN1-47	

Note 1. Signal abbreviations in ( ) are for MR-J4-_A_-RJ.

2. When using this signal, enable PP and NP in [Pr. PD44] and [Pr. PD46].

3. When using this signal, enable ZP in [Pr. PD24].

2) Program method (MR-J2S-_CL_)

MR-J2S-_CL_		Signal abbreviation (Note 1)	MR-J4-_A_-RJ	
Connector pin assignment	Connector pin No.		Connector pin No.	Connector pin assignment
CN1A 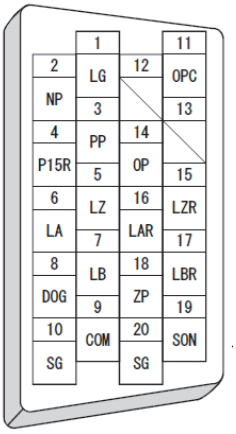	CN1A-1	LG	CN1-3 CN1-28	CN1 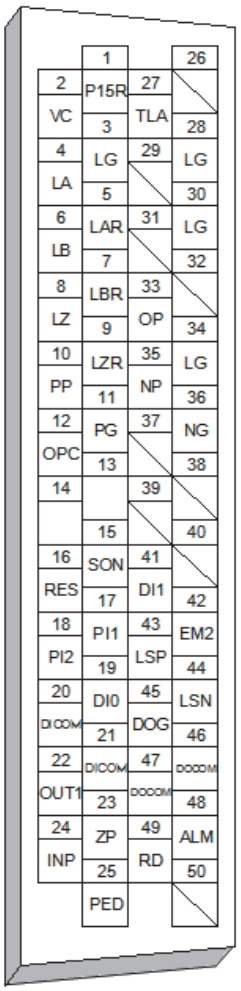
	CN1A-2	NP	CN1-35 (Note 2)	
	CN1A-3	PP	CN1-10 (Note 2)	
	CN1A-4	P15R	CN1-1	
	CN1A-5	LZ	CN1-8	
	CN1A-6	LA	CN1-4	
	CN1A-7	LB	CN1-6	
	CN1A-8	DOG	CN1-45	
	CN1A-9	COM (DICOM)	CN1-20	
	CN1A-10	SG (DOCOM)	CN1-46	
	CN1A-11	OPC	CN1-12	
	CN1A-12	-	-	
	CN1A-13	-	-	
	CN1A-14	OP	CN1-33	
	CN1A-15	LZR	CN1-9	
	CN1A-16	LAR	CN1-5	
	CN1A-17	LBR	CN1-7	
	CN1A-18	ZP	CN1-23 (Note 3)	
	CN1A-19	SON	CN1-15 (Note 4)	
	CN1A-20	SG (DOCOM)	CN1-47	
CN1B 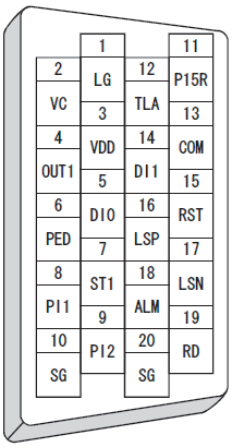	CN1B-1	LG	CN1-30 CN1-34	
	CN1B-2	VC	CN1-2	
	CN1B-3	VDD	-	
	CN1B-4	OUT1	CN1-22 (Note 3)	
	CN1B-5	DI0	CN1-19	
	CN1B-6	PED	CN1-25 (Note 3)	
	CN1B-7	ST1	CN1-17	
	CN1B-8	PI1	CN1-17 (Note 4)	
	CN1B-9	PI2	CN1-18 (Note 4)	
	CN1B-10	SG (DOCOM)	CN1-46	
	CN1B-11	P15R	CN1-1	
	CN1B-12	TLA	CN1-27	
	CN1B-13	COM (DICOM)	CN1-21	
	CN1B-14	DI1	CN1-41	
	CN1B-15	RES	CN1-16 (Note 4)	
	CN1B-16	LSP	CN1-43	
	CN1B-17	LSN	CN1-44	
	CN1B-18	ALM	CN1-48	
	CN1B-19	RD	CN1-49	
	CN1B-20	SG (DOCOM)	CN1-47	

Note 1. Signal abbreviations in ( ) are for MR-J4-_A_-RJ.
2. When using this signal, enable PP and NP in [Pr. PD44] and [Pr. PD46].
3. When using this signal, enable OUT1, ZP, and PED in [Pr. PD23], [Pr. PD24], and [Pr. PD26].
4. When using this signal, enable the SON, RES, PI1 and PI2 in [Pr. PD04], [Pr. PD06], [Pr. PD08], and [Pr. PD10].

(b) CN3 (MR-J2S-_CP_/CL_)

MR-J2S-_CP_/CL_		Signal abbreviation (Note)	MR-J4-_A_-RJ	
Connector pin assignment	Connector pin No.		Connector pin No.	Connector pin assignment
CN3 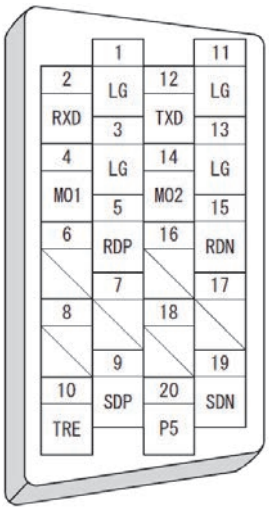 	CN3-3	LG	CN6-1	CN6
	CN3-4	MO1	CN6-2	
	CN3-14	MO2	CN6-3	
	CN3-13	LG	-	
	CN3-1	LG	CN3-1	CN3 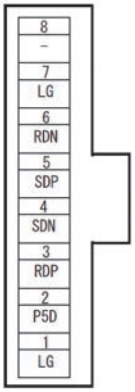
	CN3-5	RDP	CN3-3	
	CN3-9	SDP	CN3-5	
	CN3-11	LG	CN3-7	
	CN3-15	RDN	CN3-6	
	CN3-19	SDN	CN3-4	
	CN3-20	P5(P5D)	CN3-2	
	CN3-2	RXD	-	
	CN3-10	TRE	-	
	CN3-12	TXD	-	

Note. Signal abbreviations in parentheses are for MR-J4-_A_-RJ.

3.5 Comparison of Peripheral Equipment

POINT
●Refer to "Part 9: Review on Replacement of Optional Peripheral Equipment".

3.6 Comparison of Parameters

⚠ CAUTION

- Never perform extreme adjustments and changes to the parameters, otherwise the operation may become unstable.
- If fixed values are written in the digits of a parameter, do not change these values.
- Do not change parameters for manufacturer setting.
- Do not enter any setting value other than those specified for each parameter.

POINT

- For the parameter converter function, refer to "Part 7: Common Reference Material".
- To enable a parameter whose abbreviation is preceded by *, turn the power OFF and then ON after setting the parameter.
- For details about parameter settings for replacement, refer to the MR-J4-_A_-RJ Servo Amplifier Instruction Manual (POSITIONING MODE).
- With MR-J4-_A_-RJ, the deceleration to a stop function is enabled by the factory setting. To disable the deceleration to a stop function, set [Pr. PA04] to "0 _ _ _".
- Wiring of the CN1-42 pin is required for the MR-J4-_A_-RJ regardless of the setting value of [Pr. PA04: Forced stop deceleration function selection]. Refer to "3.3 List of Corresponding Connectors and Terminal Blocks" for details regarding wiring.

3.6.1 Setting requisite parameters upon replacement

The parameters shown in this section are a minimum number of parameters that need to be set for replacement. Depending on the settings of the currently used servo amplifier, parameters other than these may need to be set.

(1) Common when replacing MR-J2S-_CP_/MR-J2S-_CL_

(a) Simultaneous replacement with MR-J4-_A_-RJ and an HG motor

Parameter number	Name	Initial value	Setting value	Description
PA04	Function selection A-1	2 0 0 0h	0 0 0 0h	Forced stop deceleration function selection To configure the same settings as for MR-J2S-_CP_/MR-J2S-_CL_, select "Forced stop deceleration function disabled (EM1)".
PA06	Electronic gear numerator (Commanded pulse multiplication numerator)	1	8 (Note)	When using an electronic gear, it is necessary to change the setting value. Set the electronic gear ratio of an existing servo amplifier when simultaneously replacing with MR-J4-_A_-RJ and an HG motor. When a geared servo motor is replaced, the actual reduction ratio may differ before and after the replacement. If the ratio differs after the replacement, set the values considering the actual reduction ratio.
PA07	Electronic gear denominator (Commanded pulse multiplication denominator)	1	1 (Note)	
PA21	Function selection A-3	0 0 0 1h	3 0 0 1h	Electronic gear selection Select "J2S electronic gear setting value compatibility mode" to continue using the electronic gear ratio set in MR-J2S-_CP_/MR-J2S-_CL_.
PA09	Auto tuning response	16	8	Auto tuning response setting Enter this setting value for replacement, referring to "3.6.3 Comparison of parameter details". It is necessary to make gain adjustment again when replacing. For details about gain adjustment, refer to "MR-J2S-_CP_ [Pr. 3] (MR-J4-_A_ [Pr. PA09])" in Section 3.6.3.

Note. The example value shown is for when the electronic gear ratio of an existing servo amplifier is set as "8/1".

(b) When continuing to use the HC-_FS/HA-_FS motor:

Parameter number	Name	Initial value	Setting value	Description
PA04	Function selection A-1	2 0 0 0h	0 0 0 0h	Forced stop deceleration function selection To configure the same settings as for MR-J2S-_CP_/MR-J2S-_CL_, select "Forced stop deceleration function disabled (EM1)".
PA06	Electronic gear numerator (Commanded pulse multiplication numerator)	1	8 (Note)	When using an electronic gear, it is necessary to change the setting value. Set the electronic gear ratio of an existing servo amplifier. When a geared servo motor is replaced, the actual reduction ratio may differ before and after the replacement. If the ratio differs after the replacement, set the values considering the actual reduction ratio.
PA07	Electronic gear denominator (Commanded pulse multiplication denominator)	1	1 (Note)	
PA21	Function selection A-3	0 0 0 1h	0 0 0 1h	Electronic gear selection Use with the initial value as is.
PA09	Auto tuning response	16	8	Auto tuning response setting Enter this setting value for replacement, referring to "3.6.3 Comparison of parameter details". It is necessary to make gain adjustment again when replacing. For details about gain adjustment, refer to "MR-J2S-_CP_ [Pr. 3] (MR-J4-_A_ [Pr. PA09])" in Section 3.6.3.
PD30	Function selection D-1	0 0 0 0h	1 _ _ _h	This is used to select enabled or disabled for the thermistor of the servo motor. : When using (HA-LFS series) servo motors that have thermal terminals and not connecting thermal signals to the MR-J4 servo amplifier, set this parameter to "1 _ _ _h (Disabled)". The overheat protection of a servo motor is not enabled. Configure a protective circuit.

Note. The example value shown is for when the electronic gear ratio of an existing servo amplifier is set as "8/1".

(2) When replacing MR-J2S-_CP_

Parameter number	Name	Initial value	Setting value	Description
PA01	Operation mode	1 0 0 0h	_ _ _ 6h	Select the servo amplifier control mode. Select the positioning mode (point table method).

(3) When replacing MR-J2S-_CL_

Parameter number	Name	Initial value	Setting value	Description
PA01	Operation mode	1 0 0 0h	_ _ _ 7h	Select the servo amplifier control mode. Select the positioning mode (program method).

3.6.2 Parameter comparison list

POINT

- Manufacturer setting parameters are not described here.
- The parameters with [CP] can be used only for MR-J2S-_CP_, while the parameters with [CL] can be used only for MR-J2S-_CL_. The parameters without [CP] or [CL] are the parameters that can be used for both MR-J2S-_CP_ and MR-J2S-_CL_.

Parameters for MR-J2S-_CP_ or MR-J2S-_CL_						MR-J4-_A_-RJ parameters				
No.	Abbreviation	Parameter name		Initial value	Customer setting value	No.	Abbreviation	Parameter name	Initial value	Customer setting value
0	*STY	Command method Regenerative options selection	[CL] Program edit	0000h		PT02	*TOP1	Function selection T-1 (Program Writing Inhibit)	0000h	
			Command method			PT01	*CTY	Command mode selection	0000h	
			Regenerative option			PA02	*REG	Regenerative option	0000h	
1	*FTY	Feeding function selection	ST1 coordinate system selection	0000h		PA14	*POL	Rotation direction selection	0	
			Feed length multiplication (STM)			PT03	*FTY	Feeding function selection: Feed length multiplication (STM)	0000h	
			Manual pulse generator multiplication					Feeding function selection: Manual pulse generator multiplication		
			Follow-up of the servo-on (SON) OFF, and forced stop (EMG) OFF in the absolute value command method in the incremental system.			PT02	*TOP1	Function selection T-1 (Follow-up of the servo-on (SON) OFF, and forced stop 2 (EM2) OFF in the absolute value command method in the incremental system)	0000h	
2	*OP1	Function selection 1	Input filter	0002h		PD29	*DIF	Input Filter Setting	0004h	
			Absolute position detection system selection			PA03	*ABS	Absolute position detection system selection	0000h	
3	ATU	Auto tuning	Mode setting response setting	0105h		PA09	RSP	Auto tuning response (Note)	16	
						PA08	ATU	Auto tuning mode (Note)	0001h	
4	*CMX	Electronic gear numerator		1		PA06	*CMX	Electronic gear numerator (command pulse multiplication numerator)	1	
						PA21	*AOP3	Function selection A-3 (Electronic gear selection)	0001h	
5	*CDV	Electronic gear denominator		1		PA07	*CDV	Electronic gear denominator (command pulse multiplication denominator)	1	
						PA21	*AOP3	Function selection A-3 (Electronic gear selection)	0001h	
6	INP	[CP] In-position range		100		PA10	INP	In-position range	100	
	PED	[CL] Position end output		100						
7	PG1	Position loop gain 1		35		PB07	PG1	Model loop gain (Note)	15.0	
8	*ZTY	Home position return type	Home position return types Home position return direction	0010h		PT04	*ZTY	Home position return type	0010h	
			Proximity dog input polarity			PT29	*TOP3	Function selection T-3 (Proximity dog polarity selection)	0000h	
9	ZRF	Home position return speed		500		PT05	ZRF	Home position return speed	100	
10	CRF	Creep speed		10		PT06	CRF	Creep speed	10	
11	ZST	Home position shift distance		0		PT07	ZST	Home position shift distance	0	
12	CRP	[CP] Rough match output range		0		PT12	CRP	Rough match output range	0	
13	JOG	JOG speed		100		PT13	JOG	JOG operation	100	
14	*STC	S-pattern acceleration/deceleration time constant		0		PC03	*STC	S-pattern acceleration/deceleration time constant	0	
15	*SNO	Station Number Setting		0		PC20	*SNO	Station Number Setting	0	
16	*BPS	Serial communication function selection - Alarm history clear		0000h		PC21	*SOP	RS-422 communication function selection	0000h	
						PC18	*BPS	Alarm history clear selection	0000h	
17	MOD	Analog monitor output		0100h		PC14	MOD1	Analog monitor 1 output	0000h	
						PC15	MOD2	Analog monitor 2 output	0001h	
18	*DMD	Status display selection	Status of servo amplifier display	0000h		PC36	*DMD	Status display selection	0000h	
			Status display for MR-DP60					No corresponding parameter		
19	*BLK	Parameter writing inhibit		0000h		PA19	*BLK	Parameter writing inhibit	00AAh	
20	*OP2	Function selection 2	Slight Vibration Suppression Control	0000h		PB24	*MVS	Slight vibration suppression control selection	0000h	
22	*OP4	Function selection 4	LSP, LSN stop selection	0000h		PD30	*DOP1	Function selection D-1 (LSP, LSN stop selection)	0000h	

Note. Parameters related to gain adjustment are different from those for the MR-J2S-_CP_ servo amplifier. For details on how to make gain adjustments, refer to the MR-J4-_A_-RJ Servo Amplifier Instruction Manual (POSITIONING MODE).

Parameters for MR-J2S-_CP_ or MR-J2S-_CL_					MR-J4-_A_-RJ parameters				
No.	Abbreviation	Parameter name	Initial value	Customer setting value	No.	Abbreviation	Parameter name	Initial value	Customer setting value
23	SIC	Serial communication time-out selection	0		PF04	SIC	RS-422 communication time-out selection	0	
24	FFC	Feed forward gain	0		PB04	FFC	Feed forward gain (Note)	0	
25	VCO	Override offset	0		PC37	VCO	Analog override offset	0	
26	TLO	Torque limit offset	0		PC38	TPO	Analog torque limit offset	0	
27	*ENR	Encoder output pulse	4000		PA15	*ENR	Encoder output pulses (Refer to also PC19.)	4000	
28	TL1	Internal torque limit 1	100		PA11	TLP	Forward rotation torque limit	100.0	
					PA12	TLN	Reverse rotation torque limit	100.0	
29	TL2	Internal torque limit 2	100		PC35	TL2	Internal torque limit 2	100.0	
30	*BKC	Backlash compensation	0		PT14	*BKC	Backlash compensation	0	
31	MO1	Analog monitor 1 offset	0		PC39	MO1	Analog monitor 1 offset	0	
32	MO2	Analog monitor 2 offset	0		PC40	MO2	Analog monitor 2 offset	0	
33	MBR	Electromagnetic brake sequence output	100		PC16	MBR	Electromagnetic brake sequence output	0	
34	GD2	Load to motor inertia ratio	70		PB06	GD2	Load to motor inertia ratio (Note)	7.00	
35	PG2	Position loop gain 2	35		PB08	PG2	Position loop gain (Note)	37.0	
36	VG1	Speed loop gain 1	177				No corresponding parameter		
37	VG2	Speed loop gain 2	817		PB09	VG2	Speed loop gain (Note)	823	
38	VIC	Speed integral compensation	48		PB10	VIC	Speed integral compensation (Note)	33.7	
39	VDC	Speed differential compensation	980		PB11	VDC	Speed differential compensation (Note)	980	
42	*ZPS	Home position return position data	0		PT08	*ZPS	Home position return position data	0	
43	DCT	Travel distance after proximity dog	1000		PT09	DCT	Travel distance after proximity dog	1000	
44	ZTM	Stopper type home position return - Stopper time	100		PT10	ZTM	Stopper type home position return - Stopper time	100	
45	ZTT	Stopper type home position return torque limit value	15		PT11	ZTT	Stopper type home position return torque limit value	15.0	
46	*LMP	Software limit +	0		PT15	LMPL	Software limit +	0	
47					PT16	LMPH			
48	*LMN	Software limit -	0		PT17	LMNL	Software limit -	0	
49					PT18	LMNH			
50	*LPP	Position range output address +	0		PT19	*LPPL	Position range output address +	0	
51					PT20	*LPPH			
52	*LNP	Position range output address -	0		PT21	*LNPL	Position range output address -	0	
53					PT22	*LNPH			

Note. Parameters related to gain adjustment are different from those for the MR-J2S-_CP_ servo amplifier. For details on how to make gain adjustments, refer to the MR-J4-_A_-RJ Servo Amplifier Instruction Manual (POSITIONING MODE).

Parameters for MR-J2S-_CP_ or MR-J2S-_CL_						MR-J4-_A_-RJ parameters					
No.	Abbreviation	Parameter name		Initial value	Customer setting value	No.	Abbreviation	Parameter name		Initial value	Customer setting value
55	*OP6	Function selection 6 (Handle the base circuit when RES (Reset) is enabled)		0000h		PD30	*DOP1	Function selection D-1 (Select the base circuit status when RES (Reset) is ON.		0000h	
57	*OP8	Function selection 8	Protocol checksum selection	0000h		PF01	*FOP1	Function selection F-1	Protocol checksum selection	0000h	
			Protocol station No. selection						Protocol station No. selection		
58	*OP9	Function selection 9	Encoder pulse output phase changing	0000h		PC19	*ENRS	Encoder output pulses selection	Encoder output pulse phase selection	0000h	
			Encoder pulse setting selection						Encoder output pulse setting selection		
59	*OPA	Function selection A	Torque limit rotation direction	0000h		PD33	*DOP4	Function selection D-4 (Torque limit enabled rotation direction)		0000h	
			Alarm code output			PD34	*DOP5	Function selection D-5 (Alarm code output)		0000h	
61	NH1	Machine resonance suppression filter 1	Notch frequency selection	0000h		PB01	FILT	Adaptive tuning mode (adaptive filter II)		0000h	
						PB13	NH1	Machine resonance suppression filter 1		4500	
			Notch depth			PB14	NHQ1	Notch shape selection 1		0000h	
62	NH2	Machine resonance suppression filter 2	Notch frequency selection	0000h		PB15	NH2	Machine resonance suppression filter 2		4500	
			Notch depth			PB16	NHQ2	Notch shape selection 2		0000h	
63	LPF	Low-pass filter Adaptive vibration suppression control	Low-pass filter selection	0000h		PB18	LPF	Low-pass filter setting		3141	
						PB23	VFBF	Low-pass filter selection		0000h	
			Adaptive vibration suppression control level selection			PB01	FILT	Adaptive tuning mode (adaptive filter II)		0000h	
64	GD2B	Load to motor inertia ratio 2		70		PB29	GD2B	Gain switching load to motor inertia ratio (Note)		7.00	
65	PG2B	Position loop gain 2 changing ratio		100		PB30	PG2B	Position loop gain after gain switching (Note)		0.0	
66	VG2B	Speed loop gain 2 changing ratio		100		PB31	VG2B	Speed loop gain after gain switching (Note)		0	
67	VICB	Speed integral compensation changing ratio		100		PB32	VICB	Speed integral compensation after gain switching (Note)		0.0	
68	*CDP	Gain switching selection		0000h		PB26	*CDP	Gain switching function		0000h	
69	CDS	Gain Switching Condition		10		PB27	CDL	Gain switching condition		10	
70	CDT	Gain switching time constant		1		PB28	CDT	Gain switching time constant		1	
74	OUT1	[CL] OUT1 output time setting		0		PT23	OUT1	OUT1 output setting time		0	
75	OUT2	[CL] OUT2 output time setting		0		PT24	OUT2	OUT2 output setting time		0	
76	OUT3	[CL] OUT3 output time setting		0		PT25	OUT3	OUT3 output setting time		0	
77	*SYC1	[CL] program input polarity selection 1		0000h		PT29	*TOP3	Function selection T-3	PI1 (Program input 1) polarity selection	0000h	
									PI1 (Program input 2) polarity selection		
									PI1 (Program input 3) polarity selection		

Note. Parameters related to gain adjustment are different from those for the MR-J2S-_CP_ servo amplifier. For details on how to make gain adjustments, refer to the MR-J4-_A_-RJ Servo Amplifier Instruction Manual (POSITIONING MODE).

3.6.3 Comparison of parameter details

POINT

●Backslash (\) in initial value fields indicate that the function is not supported.

<table>
<tr><th colspan="4">MR-J2S-_CP_ or MR-J2S-_CL_</th><th colspan="3">MR-J4-_A_-RJ</th></tr>
<tr><th rowspan="2">No.</th><th rowspan="2">Name and function</th><th colspan="2">Initial value</th><th rowspan="2">No.</th><th rowspan="2">Name and function</th><th rowspan="2">Initial value</th></tr>
<tr><th>CP</th><th>CL</th></tr>
<tr><td>0</td><td>Command method and regenerative option selection
Used to select command method and regenerative option.

0 _ _ _
[CL] Program edit
0: Permit
1: Inhibit

Command method selection
0: Absolute value command method
1: Incremental value command method

Regenerative option selection
0: Not used (However, MR-J2S-10CL cannot be used because a regenerative resistor is not built in it.)
1: FR-RC, FR-BU2
2: MR-RB032
3: MR-RB12
4: MR-RB32
5: MR-RB30
6: MR-RB50 (A cooling fan is needed.)
8: MR-RB31
9: MR-RB51 (A cooling fan is needed.)
Select the regenerative option compatible with the servo amplifier. A parameter error occurs when a wrong one is selected.</td><td>0000h</td><td>0000h</td><td>PT02</td><td>Program writing selection
<table><tr><th>Setting digit</th><th>Function</th></tr><tr><td>x _ _ _</td><td>Program writing inhibit
0: Permit
1: Inhibit</td></tr></table></td><td>0000h</td></tr>
<tr><td></td><td></td><td></td><td></td><td>PT01</td><td>Command mode selection
<table><tr><th>Setting digit</th><th>Function</th></tr><tr><td>_ _ _ x</td><td>Positioning command method selection
0: Absolute value command method
1: Incremental value command method</td></tr></table></td><td>0000h</td></tr>
<tr><td></td><td></td><td></td><td></td><td>PA02</td><td>Regenerative options
Select the regenerative option.
Refer to the comparison table below for the setting method.

Regenerative option setting comparison table
<table><tr><th>MR-J2S-_CP_</th><th></th><th>MR-J4-_A_</th><th rowspan="2">Regenerative option model</th></tr><tr><th>No.0</th><th></th><th>PA02</th></tr><tr><td>0 0 _ _</td><td rowspan="9">→</td><td>0 0 0 0</td><td>Not used (Built-in resistor)</td></tr><tr><td>0 1 _ _</td><td>0 0 0 1</td><td>FR-RC, FR-BU2</td></tr><tr><td>0 2 _ _</td><td>0 0 0 2</td><td>MR-RB032</td></tr><tr><td>0 3 _ _</td><td>0 0 0 3</td><td>MR-RB12</td></tr><tr><td>0 4 _ _</td><td>0 0 0 4</td><td>MR-RB32</td></tr><tr><td>0 5 _ _</td><td>0 0 0 5</td><td>MR-RB30</td></tr><tr><td>0 6 _ _</td><td>0 0 0 6</td><td>MR-RB50 (Note)</td></tr><tr><td>0 8 _ _</td><td>0 0 0 8</td><td>MR-RB31</td></tr><tr><td>0 9 _ _</td><td>0 0 0 9</td><td>MR-RB51 (Note)</td></tr></table>Note. Cooling fan is needed.</td><td>0000h</td></tr>
</table>

<table>
<tr><th colspan="4">MR-J2S-_CP_ or MR-J2S-_CL_</th><th colspan="3">MR-J4-_A_-RJ</th></tr>
<tr><th rowspan="2">No.</th><th rowspan="2">Name and function</th><th colspan="2">Initial value</th><th rowspan="2">No.</th><th rowspan="2">Name and function</th><th rowspan="2">Initial value</th></tr>
<tr><th>CP</th><th>CL</th></tr>
<tr><td>1</td><td>Feeding function selection
Select the feed length multiplication and manual pulse generator multiplication.

_ _ _ _
ST1 Coordinate system selection
0: Increase addresses toward the CCW direction
1: Increase addresses toward the CW direction

Feed length multiplication (STM)
0: Single
1: 10-fold
2: 100-fold
3: 1000-fold

Manual pulse generator multiplication
0: Single
1: 10-fold
2: 100-fold

Follow-up of the servo-on (SON) OFF, and forced stop (EMG) OFF in the absolute value command method in the incremental system
0: Disabled
1: Enabled
Normally, when using this servo amplifier in the absolute value command method in the incremental system, the home position will be erased if the servo-on is turned off or switched to the forced stop state. If this parameter is set to "1", the home position will not be erased even if the servo-on is turned off or switched to the forced stop state. In this case, the operation can be resumed by turning the servo-on (SON) or canceling the forced stop (EMG).</td><td>0000h</td><td>0000h</td><td>PA14</td><td>Rotation direction selection
Select the rotation direction of the servo motor when turning ST1 (forward rotation start) or ST2 (reverse rotation start) On.
<table><tr><th rowspan="2">Setting value</th><th colspan="2">Servo motor rotation direction</th></tr><tr><th>During the positioning address increase</th><th>During the positioning address decrease</th></tr><tr><td>0</td><td>CCW direction</td><td>CW direction</td></tr><tr><td>1</td><td>CW direction</td><td>CCW direction</td></tr></table>Servo motor rotation direction is as follows:
 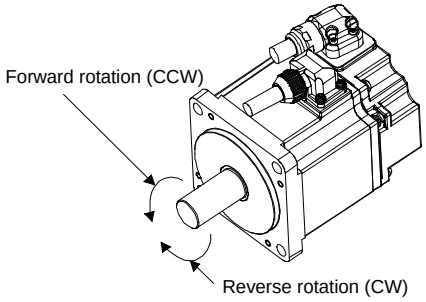
</td><td>0</td></tr>
<tr><td></td><td></td><td></td><td></td><td>PT03</td><td>Feeding function selection
<table><tr><th>Setting digit</th><th>Function</th></tr><tr><td>_ _ _ x</td><td>Feed length multiplication [STM]
0: Single
1: 10-fold
2: 100-fold
3: 1000-fold</td></tr><tr><td>_ _ x _</td><td>Manual pulse generator multiplication
0: Single
1: 10-fold
2: 100-fold</td></tr></table></td><td>0000h</td></tr>
<tr><td></td><td></td><td></td><td></td><td>PT02</td><td>Function selection T-1
<table><tr><th>Setting digit</th><th>Function</th></tr><tr><td>_ _ _ x</td><td>Follow-up of the servo-on (SON) OFF, and forced stop 2 (EM2) OFF in the absolute value command method in the incremental system.
0: Disabled (Home position will be erased when servo-on or EM2 is turned OFF.)
1: Enabled (Home position will not be erased even when servo-on or EM2 is turned OFF, or when an alarm that can be canceled by resetting is generated. The operation can be resumed.)</td></tr></table></td><td>0000h</td></tr>
<tr><td>2</td><td>Function selection 1
Used to select the input filter and absolute position detection system.

_ 0 0 _
Input filter
If an external input signal causes chattering due to noise, etc., the input filter is used to suppress it.
0: None
1: 0.88 [ms]
2: 1.77 [ms]
3: 2.66 [ms]
4: 3.55 [ms]
5: 4.44 [ms]

Absolute position detection system selection
0: Use in the incremental system
1: Use in the absolute position detection system</td><td>0002h</td><td>0002h</td><td>PD29</td><td>Input filter setting
If an external input signal causes chattering due to noise, etc., the input filter is used to suppress it.
Refer to the comparison table below for the setting method.

Input filter setting comparison table
<table><tr><th>MR-J2S-_CP_</th><th></th><th>MR-J4-_A_</th></tr><tr><td>No.2</td><td></td><td>PD29</td></tr><tr><td>_ _ _ 0</td><td rowspan="6">→</td><td>0 0 0 0</td></tr><tr><td>_ _ _ 1</td><td>0 0 0 1</td></tr><tr><td>_ _ _ 2</td><td>0 0 0 2</td></tr><tr><td>_ _ _ 3</td><td>0 0 0 3</td></tr><tr><td>_ _ _ 4</td><td>0 0 0 4</td></tr><tr><td>_ _ _ 5</td><td>0 0 0 5</td></tr></table></td><td>0004h</td></tr>
<tr><td></td><td></td><td></td><td></td><td>PA03</td><td>Absolute position detection system
When using the absolute position detection system, set "_ _ _ 1".</td><td>0000h</td></tr>
</table>

<table>
<tr><th colspan="4">MR-J2S-_CP_ or MR-J2S-_CL_</th><th colspan="3">MR-J4-_A_-RJ</th></tr>
<tr><th rowspan="2">No.</th><th rowspan="2">Name and function</th><th colspan="2">Initial value</th><th rowspan="2">No.</th><th rowspan="2">Name and function</th><th rowspan="2">Initial value</th></tr>
<tr><th>CP</th><th>CL</th></tr>
<tr><td>3</td><td>Auto Tuning
Select a response level, etc., when performing auto tuning.
0 _ 0 _
Auto tuning response setting
<table>
<tr><th>Setting value</th><th>Response</th><th>The standard of machine resonance</th></tr>
<tr><td>1</td><td rowspan="15">Low Response
↕
Medium Response
↕
High Response</td><td>15Hz</td></tr>
<tr><td>2</td><td>20Hz</td></tr>
<tr><td>3</td><td>25Hz</td></tr>
<tr><td>4</td><td>30Hz</td></tr>
<tr><td>5</td><td>35Hz</td></tr>
<tr><td>6</td><td>45Hz</td></tr>
<tr><td>7</td><td>55Hz</td></tr>
<tr><td>8</td><td>70Hz</td></tr>
<tr><td>9</td><td>85Hz</td></tr>
<tr><td>A</td><td>105Hz</td></tr>
<tr><td>B</td><td>130Hz</td></tr>
<tr><td>C</td><td>160Hz</td></tr>
<tr><td>D</td><td>200Hz</td></tr>
<tr><td>E</td><td>240Hz</td></tr>
<tr><td>F</td><td>300Hz</td></tr>
</table>
・Decrease the setting value if hunting occurs in the machine or if the gear noise is loud.
・To improve the performance so as to shorten the stop settling time, increase the setting value.
Gain adjustment mode selection
<table>
<tr><th>Setting value</th><th>Gain adjustment mode</th><th>Adjustment description</th></tr>
<tr><td>0</td><td>Interpolation mode</td><td>Fixes to position loop gain 1 (parameter No. 6).</td></tr>
<tr><td>1</td><td>Auto tuning mode 1</td><td>This is ordinary auto tuning.</td></tr>
<tr><td>2</td><td>Auto tuning mode 2</td><td>Fixes to the load to motor inertia ratio setting with parameter No. 34. Responsive setting is changeable.</td></tr>
<tr><td>3</td><td>Manual mode 1</td><td>Adjusted manually simply.</td></tr>
<tr><td>4</td><td>Manual mode 2</td><td>Adjust all gains manually.</td></tr>
</table></td><td>0105h</td><td>0105h</td><td>PA09</td><td>Auto tuning response
Set a response of the auto tuning.
Refer to the comparison table below for the setting method.
Response level comparison table
<table>
<tr><th>MR-J2S-_CP_
No.3</th><th>→</th><th>MR-J4-_A_
PA09</th></tr>
<tr><td>_ _ 0 1</td><td></td><td>8 or 9</td></tr>
<tr><td>_ _ 0 2</td><td></td><td>1 1</td></tr>
<tr><td>_ _ 0 3</td><td></td><td>1 3</td></tr>
<tr><td>_ _ 0 4</td><td></td><td>1 4</td></tr>
<tr><td>_ _ 0 5</td><td></td><td>15 or 16</td></tr>
<tr><td>_ _ 0 6</td><td></td><td>17 or 18</td></tr>
<tr><td>_ _ 0 7</td><td></td><td>19 or 20</td></tr>
<tr><td>_ _ 0 8</td><td></td><td>21 or 22</td></tr>
<tr><td>_ _ 0 9</td><td></td><td>2 3</td></tr>
<tr><td>_ _ 0 A</td><td></td><td>2 5</td></tr>
<tr><td>_ _ 0 B</td><td></td><td>26 or 27</td></tr>
<tr><td>_ _ 0 C</td><td></td><td>28 or 29</td></tr>
<tr><td>_ _ 0 D</td><td></td><td>30 or 31</td></tr>
<tr><td>_ _ 0 E</td><td></td><td>3 2</td></tr>
<tr><td>_ _ 0 F</td><td></td><td>33 or 34</td></tr>
</table></td><td>16</td></tr>
<tr><td></td><td></td><td></td><td></td><td>PA08</td><td>Auto tuning mode
Used to select the gain adjustment mode.
It is necessary to make gain adjustment again when replacing.
Select auto tuning mode 1 (initial value) and make gain adjustment.
For details on how to make gain adjustments, refer to MR-J4-_A_ Servo Amplifier Instruction Manual, Chapter 6.</td><td>0001h</td></tr>
<tr><td>4</td><td>Electronic gear numerator
Used to set a value for the electronic gear numerator.
Setting "0" will set the pulse number of encoder.</td><td>1</td><td>1</td><td>PA21</td><td>Electronic gear selection
<table>
<tr><th>Setting digit</th><th>Function</th></tr>
<tr><td>x _ _ _</td><td>Electronic gear selection
0: Electronic gear ([Pr. PA06] and [Pr. PA07]) enabled
3: J2S electronic gear setting value compatibility mode (Electronic gear ([Pr. PA06] and [Pr. PA07] × 32))
The electronic gear setting value set for MR-J2S can be used.</td></tr>
</table>
Use the initial value when replacing the servo amplifier and the servo motor simultaneously.</td><td>0001h</td></tr>
<tr><td></td><td></td><td></td><td></td><td>PA06</td><td>Electronic gear numerator
(command pulse multiplication numerator)
Used to set a multiplier for the command pulse.</td><td>1</td></tr>
<tr><td>5</td><td>Electronic gear denominator
Used to set a value for the electronic gear denominator.</td><td>1</td><td>1</td><td>PA21</td><td>Electronic gear selection
Use the initial value when replacing.</td><td>0001h</td></tr>
<tr><td></td><td></td><td></td><td></td><td>PA07</td><td>Electronic gear denominator
(command pulse multiplication denominator)
Used to set a multiplier for the command pulse.</td><td>1</td></tr>
<tr><td>6</td><td>In-position range
Set the range of droop pulses occurred when outputting MEND (Travel completion) and INP (In-position).</td><td>100</td><td></td><td>PA10</td><td>In-position range
Set an in-position range per command unit.
It can be changed to servo motor encoder pulse unit in the setting of [Pr. PC24].
<table>
<tr><th>Pr. PA01</th><th>In-position setting range</th></tr>
<tr><td>_ _ _ 6 (Positioning mode (Point table method))</td><td rowspan="2">The range where MEND (Travel completion), PED (Position end), and INP (In-position) are output.</td></tr>
<tr><td>_ _ _ 7 (Positioning mode (Program method))</td></tr>
</table></td><td>100</td></tr>
<tr><td></td><td>Position end output
Set the range of droop pulses occurred when outputting PED (Position end).</td><td></td><td>100</td><td></td><td></td><td></td></tr>
</table>

MR-J2S-_CP_ or MR-J2S-_CL_				MR-J4-_A_-RJ		
No.	Name and function	Initial value CP	Initial value CL	No.	Name and function	Initial value
7	Position loop gain 1 Used to set the gain of the position loop 1. Increase the gain to improve track ability in response to the position command.	35	35	PB07	Model loop gain Used to adjust the response gain till the set position. When auto tuning 1 is selected, the auto tuning result is automatically used for this parameter.	15.0
8	Home position return type Set home position return types, home position return direction, and proximity dog input polarity. 0 _ _ _ Home position return types 0: Dog type 1: Count type 2: Data set type 3: Stopper type 4: Home position ignorance (servo-on position as home position) 5: Dog type rear end reference 6: Count type front end reference 7: Dog cradle type Home position return direction 0: Address increasing direction 1: Address decreasing direction Proximity dog input polarity 0: Detect the dog by opening between DOG and SG 1: Detect the dog by shorting between DOG and SG	0010h	0010h	PT04	Home position return type Setting digit: _ _ _ x Function: Home position return types 0: Dog type (Rear end detection/Z-phase reference) 1: Count type (Front end detection/Z-phase reference) 2: Data set type 3: Stopper type 4: Home position ignorance (servo-on position as home position) 5: Dog type (Rear end detection/Rear end reference) 6: Count type (Front end detection/Front end reference) 7: Dog cradle type 8: Dog type (Front end detection/Z-phase reference) 9: Dog type (Front end detection/Front end reference) A: Dogless type (Z-phase reference) Setting digit: _ _ x _ Function: Home position return direction 0: Address increasing direction 1: Address decreasing direction When "2" or more is set in this digit, it is recognized as "1: Address decreasing direction".	0010h
				PT29	Function selection T-3 Setting digit: _ _ _ x (HEX) Function: _ _ _ x (BIN): DOG (Proximity dog) polarity selection 0: Turn OFF for detection 1: Turn ON for detection	0000h
9	Home position return speed Set the servo motor speed when returning to the home position.	500	500	PT05	Home position return speed Set the servo motor speed when returning to the home position.	100
10	Creep speed Set the creep speed after the proximity dog is detected.	10	10	PT06	Creep speed Set the servo motor speed when returning to the home position.	10
11	Home position shift distance Set the shift travel distance from the detected position of Z-phase pulse in the encoder.	0	0	PT07	Home position shift distance Set the shift travel distance from the detected position of Z-phase pulse in the encoder.	0
12	Rough match output range Set the range of remaining distance of the command outputting rough match (CPO).	0		PT12	Rough match output range Set the range of remaining distance of the command outputting rough match (CPO).	0
13	JOG speed Set the JOG speed command.	100	100	PT13	JOG operation Set the JOG speed.	100
14	S-pattern acceleration/deceleration time constant Set when inserting an S-pattern acceleration/deceleration time constant for the acceleration/deceleration time constant in the point table. This time constant is disabled when returning to the home position.	0	0	PC03	S-pattern acceleration/deceleration time constant This is used to smooth start/stop of the servo motor. Set the time of the arc part for S-pattern acceleration/deceleration. Set the same value as for MR-J2S-_CP_.	0
15	Station number setting Specify the station No. of the multi-dropped communication. Always set one station to one axis of the servo amplifier. Setting one station number to two or more stations will disable a normal communication.	0	0	PC20	Station number setting Used to set the station No. of the servo amplifier. Setting range: 0 to 31	0

MR-J2S-_CP_ or MR-J2S-_CL_				MR-J4-_A_-RJ		
No.	Name and function	Initial value CP	Initial value CL	No.	Name and function	Initial value
16	Serial communication function selection - Alarm history clear Used to select the serial communication baud rate and various conditions for communication, and to clear the alarm history. Serial communication baud rate selection 0: 9600 [bps] 1: 19200 [bps] 2: 38400 [bps] 3: 57600 [bps] 4: 4800 [bps] (for MR-DP60) Alarm history clear 0: Disabled 1: Enabled Selecting "Enabled" will erase the alarm history at the next power-on. It will be automatically disabled "0" after the alarm history is erased. Serial communication selection 0: Use RS-232C 1: Use RS-422 Serial communication response delayed time 0: Disabled 1: Enabled, reply after delay time of 800μs or more.	0000h	0000h	PC21	RS-422 communication function selection Used to select the communication speed. Adjust the speed to that of the transmitting side (master station). [Pr. PC21] Serial communication baud rate 0: 9600 [bps] 3: 57600 [bps] 1: 19200 [bps] 4: 115200 [bps] 2: 38400 [bps] RS-422 communication response delay time selection 0: Disabled 1: Enabled (Reply after delay times of 800 μs or more.)	0000h
				PC18	Alarm history clear selection Erase the alarm history. [Pr. PC18] 0: Disabled 1: Enabled Selecting "Enabled" will erase the alarm history at the next power-on. Automatically disabled when the alarm history is cleared.	0000h
17	Analog monitor output Used to select the signals output to analog monitor 1 (MO1) and analog monitor 2 (MO2). 0 0	0100h	0100h	PC14	Output to analog monitor 1 Refer to the comparison table below for the setting method.	0000h
				PC15	Output to analog monitor 2 Refer to the comparison table below for the setting method.	0001h

MR-J2S-_CP_ or MR-J2S-_CL_			MR-J4-_A_-RJ	
No.17 (Target digit number)	Display definition		PC14/PC15	Display definition
0	Servo motor speed (±8 V/max. speed) (Note 3)		0000	Servo motor speed (±8 V/max. speed) (Note 3)
1	Torque (±8 V/max. torque) (Note 3)		0001	Torque (±8 V/max. torque) (Note 3)
2	Servo motor speed (+8 V/max. speed) (Note 3)		0002	Servo motor speed (+8 V/max. speed) (Note 3)
3	Torque (+8 V/max. torque) (Note 3)		0003	Torque (+8 V/max. torque) (Note 3)
4	Current command (±8 V/max. current command)		0004	Current command (±8 V/max. current command)
5	Speed command (±8/max. speed)	→	000E	Speed command 2 (±8 V/max. speed)
6	Droop pulses (±10 V/128 pulses)		0006	Servo motor-side droop pulses (±10 V/100 pulses) (Note 1)
7	Droop pulses (±10 V/2048 pulses)		0007	Servo motor-side droop pulses (±10 V/1000 pulses) (Note 1)
8	Droop pulses (±10 V/8192 pulses)		0008	Servo motor-side droop pulses (±10 V/10000 pulses) (Note 1)
9	Droop pulses (±10 V/32768 pulses)		0008 or 0009	(Note 1, 2)
A	Droop pulses (±10 V/131072 pulses)		0009	Servo motor-side droop pulses (±10 V/100000 pulses) (Note 1)
B	Bus voltage (+8 V/400 V)		000D	Bus voltage (+8 V/400 V)

Note 1. Units used for MR-J2S-_CP_ or MR-J2S-_CL_ are different from those for MR-J4-_A_-RJ. Note that the input range of existing equipment needs to be adjusted.
2. Set "0008" or "0009". When setting the value, note that the input range of existing equipment needs to be adjusted.
3. "Maximum speed" and " Maximum torque" differ depending on the servo motor. Therefore, after the existing servo motor has been replaced with an HG motor, the output voltage for "Maximum speed" or " Maximum torque" may differ.

MR-J2S-_CP_ or MR-J2S-_CL_				MR-J4-_A_-RJ		
No.	Name and function	Initial value CP	Initial value CL	No.	Name and function	Initial value
18	Status display selection This is used to select a status display shown at power-on. Servo amplifier status display at power-on 00: Current position (initial value) 01: Command position 02: Command remaining distance 03: Point table No. 04: Cumulative Feedback Pulses 05: Servo motor speed 06: Droop pulses 07: Override voltage 08: Torque limit voltage 09: Regenerative load ratio 0A: Effective load ratio 0B: Peak load ratio 0C: Instantaneous torque 0D: Within one-revolution position at low 0E: Within one-revolution position at high 0F: ABS counter 10: Motor inertia ratio 11: Bus voltage Status display at power-on in MR-DP60 status 00: Current position (initial value) 01: Command position 02: Command remaining distance 03: Point table No. 04: Cumulative Feedback Pulses 05: Servo motor speed 06: Droop pulses 07: Override voltage 08: Torque limit voltage 09: Regenerative load ratio 0A: Effective load ratio 0B: Peak load ratio 0C: Instantaneous torque 0D: Within one-revolution position 0E: ABS counter 0F: Motor inertia ratio 10: Bus voltage	0000h		PC36	Status display selection Status display selection at power-on Refer to the comparison table below for the setting method. Status display selection comparison table Selection of servo amplifier status display at power-on	0000h

Status display selection comparison table

Selection of servo amplifier status display at power-on

MR-J2S-_CP_ No.18		MR-J4-_A_-RJ PC36	Display definition
_ _ 0 0		0 _ 2 1	Current position
_ _ 0 1		0 _ 2 2	Command position
_ _ 0 2		0 _ 2 3	Command remaining distance
_ _ 0 3		0 _ 2 4	Point table No.
_ _ 0 4		0 _ 0 0	Cumulative feedback pulses
_ _ 0 5		0 _ 0 1	Servo motor speed
_ _ 0 6		0 _ 0 2	Droop pulses
_ _ 0 7		0 _ 2 6	Override voltage
_ _ 0 8		0 _ 0 6	Analog torque limit voltage
_ _ 0 9	→	0 _ 0 7	Regenerative load ratio
_ _ 0 A		0 _ 0 8	Effective load ratio
_ _ 0 B		0 _ 0 9	Peak load ratio
_ _ 0 C		0 _ 0 A	Instantaneous torque
_ _ 0 D		0 _ 0 B	Within one-revolution position (1-pulse unit)
_ _ 0 E		0 _ 0 C	Within one-revolution position (1000-pulse unit)
_ _ 0 F		0 _ 0 D	ABS counter
_ _ 1 0		0 _ 0 E	Load to motor inertia ratio
_ _ 1 1		0 _ 0 F	Bus voltage

MR-J2S-_CP_ or MR-J2S-_CL_				MR-J4-_A_-RJ		
No.	Name and function	Initial value CP	Initial value CL	No.	Name and function	Initial value
18	Status display selection This is used to select a status display shown at power-on. Servo amplifier status display at power-on 00: Current position (initial value) 01: Command position 02: Command remaining distance 03: Program No. 04: Step No. 05: Cumulative Feedback Pulses 06: Servo motor speed 07: Droop pulses 08: Override voltage 09: Torque limit voltage 0A: Regenerative ratio 0B: Effective load ratio 0C: Peak load ratio 0D: Instantaneous torque 0E: Within one-revolution position at high 0F: Within one-revolution position at low 10: Bus voltage 11: Motor inertia ratio 12: Bus voltage MR-DP60 status display at power-on 00: Current position (initial value) 01: Command position 02: Command remaining distance 03: Program No. 04: Step No. 05: Cumulative Feedback Pulses 06: Servo motor speed 07: Droop pulses 08: Override voltage 09: Torque limit voltage 0A: Regenerative load ratio 0B: Effective load ratio 0C: Peak load ratio 0D: Instantaneous torque 0E: Within one-revolution position 0F: ABC counter 10: Motor inertia ratio 11: Bus voltage		0000h	PC36	Status display selection Status display selection at power-on Refer to the comparison table below for the setting method.	0000h

Status display selection comparison table

Selection of servo amplifier status display at power-on

MR-J2S-_CL_ No.18		MR-J4-_A_-RJ PC36	Display definition
_ _ 0 0		0 _ 2 1	Current position
_ _ 0 1		0 _ 2 2	Command position:
_ _ 0 2		0 _ 2 3	Command remaining distance
_ _ 0 3		0 _ 2 4	Program No.
_ _ 0 4		0 _ 2 5	Step No.
_ _ 0 5		0 _ 0 0	Cumulative feedback pulses
_ _ 0 6		0 _ 0 1	Servo motor speed
_ _ 0 7		0 _ 0 2	Droop pulses
_ _ 0 8		0 _ 2 6	Override voltage
_ _ 0 9		0 _ 0 6	Analog torque limit voltage
_ _ 0 A	→	0 _ 0 7	Regenerative load ratio
_ _ 0 B		0 _ 0 8	Effective load ratio
_ _ 0 C		0 _ 0 9	Peak load ratio
_ _ 0 D		0 _ 0 A	Instantaneous torque
_ _ 0 E		0 _ 0 B	Within one-revolution position (1-pulse unit)
_ _ 0 F		0 _ 0 C	Within one-revolution position (1000-pulse unit)
_ _ 1 0		0 _ 0 D	ABS counter
_ _ 1 1		0 _ 0 E	Load to motor inertia ratio
_ _ 1 2		0 _ 0 F	Bus voltage

MR-J2S-_CP_ or MR-J2S-_CL_				MR-J4-_A_-RJ		
No.	Name and function	Initial value CP	Initial value CL	No.	Name and function	Initial value
19	Parameter writing inhibit Used to select the reference range and writing range of parameters.	0000h	0000h	PA19	Parameter writing inhibit Used to select the reference range and writing range of parameters. In the positioning mode, set [Pr. PA19] to "0 0 A B" in order to read or write the positioning control parameter ([Pr. PT_ _]). (It is possible to read or write "0 0 A B" : PA to PF, PL, Po, PT.)	00AAh
20	Function selection 2 Used to select the slight vibration suppression control. 0 | | 0 | 0 Slight vibration suppression control selection 0: Disabled 1: Enabled	0000h	0000h	PB24	Slight vibration suppression control Used to select the slight vibration suppression control. 0: Disabled 1: Enabled To enable the slight vibration suppression control, select "Manual mode (_ _ _ 3)" under "Gain adjustment mode selection" in [Pr. PA08]. Slight vibration suppression control cannot be used in the speed control mode. Set the same value as for MR-J2S-_CP_.	0000h
22	Function selection 4 Used to select a stop method when LSP (Forward rotation stroke end) and LSN (Reverse rotation stroke end) are turned off. 0 | 0 | 0 | | Stop method when forward rotation stroke end (LSP)/reverse rotation stroke end (LSN) are turned off. 0: Sudden stop 1: Soft stop	0000h	0000h	PD30	Function selection D-1 0 | 0 | 0 | | Stop method when LSP(forward rotation stroke end)/LSN(reverse rotation stroke end) are turned off. 0: Sudden stop 1: Soft stop Set the same value as for MR-J2S-_CP_.	0000h
23	Serial communication time-out selection Used to select the time-out time of the communication protocol. Setting value: 0 — Description: Time-out check not carried out Setting value: 1 to 60 — Description: Set the time-out check time Check time = (setting value) [s]	0	0	PF04	RS-422 communication time-out selection (Supported version: A3 version or later) Used to select the time-out time of the communication protocol. Setting value: 0 — Description: Time-out check not carried out Setting value: 1 to 60 — Description: Set the time-out check time Check time = (setting value) [s]	0 [s]
24	Feed forward gain Set the feed forward gain. When the setting is 100%, the droop pulses during operation at constant speed are nearly zero. However, sudden acceleration/deceleration will increase the overshoot. As a standard, when setting the feed forward gain as 100%, set 1 s or more as the acceleration/deceleration time constant up to the rated speed.	0	0	PB04	Feed forward gain Set the feed forward gain. Set the same value as for MR-J2S-_CP_.	0
25	Override offset Used to set the offset voltage for the analog override. Setting range: -999 to 999	0	0	PC37	Analog override offset Set the offset voltage of the VC (Override input). Automatic setting is made by the VC automatic offset. Setting range: -9999 to 9999	0
26	Torque limit offset Used to set the offset voltage of analog torque limit. Setting range: -999 to 999	0	0	PC38	Analog torque limit offset Used to set the offset voltage of TLA (Analog torque limit). Setting range: -9999 to 9999	0

<table>
<tr><th colspan="4">MR-J2S-_CP_ or MR-J2S-_CL_</th><th colspan="3">MR-J4-_A_-RJ</th></tr>
<tr><th rowspan="2">No.</th><th rowspan="2">Name and function</th><th colspan="2">Initial value</th><th rowspan="2">No.</th><th rowspan="2">Name and function</th><th rowspan="2">Initial value</th></tr>
<tr><th>CP</th><th>CL</th></tr>
<tr><td>27</td><td>Encoder output pulses
Used to set the encoder pulses (A-phase and B-phase) output by the servo amplifier. Set the value 4 times greater than the A-phase and B-phase pulses.
[Pr. 58] can be used to choose the output pulse setting or output dividing ratio setting.
The number of A-phase and B-phase pulses actually output is 1/4 times greater than the preset number of pulses.
The maximum output frequency is 1.3 Mpulse/s (after multiplication by 4). Use this parameter within this range.
• For output pulse designation
Set [Pr. 58] to "0 _ _ _" (initial value).
Set the number of pulses per servo motor revolution.
Output pulse = setting value [pulse/rev].
For instance, when "5600" is set, the actual output A- and B-phase pulses are as follows.
Phase A/phase B output ulse = $\frac{5600}{4}$ =1400 [pulse]
• For output division ratio setting
Set [Pr. 58] to "1 _ _ _".
The number of pulses per servo motor revolution is divided by the set value.
Output pulse = $\frac{\text{Resolution per servo motor revolution}}{\text{Setting value}}$ [pulse/rev]
For instance, when "8" is set, the actual output A- and B-phase pulses are as follows.
Phase A/phase B output pulse = $\frac{131072}{8} \cdot \frac{1}{4}$ = 4096 [pulse/rev]</td><td>4000</td><td>4000</td><td>PA15</td><td>Encoder output pulse
Used to set the encoder pulses (A-phase and B-phase) output by the servo amplifier.
Refer to the comparison table below for the setting method.
Encoder output pulse setting comparison table
(1) For primary replacement
<table><tr><th colspan="2">MR-J2S-_CP_</th><th></th><th colspan="2">MR-J4-_A_-RJ</th></tr><tr><th>No.58</th><th>No.27 (Note 1)</th><th></th><th>PC19</th><th>PA15 (Note 2)</th></tr><tr><td>0 _ _ _</td><td>N</td><td>→</td><td>0 _ 0 _</td><td>N</td></tr><tr><td>1 _ _ _</td><td>N</td><td></td><td>0 _ 1 _</td><td>N</td></tr></table>Note 1.N = J2S setting value.
2.Set the same value as for J2S in MR-J4-_A_-RJ [Pr. PA15].
(2) For secondary/simultaneous replacement
<table><tr><th colspan="2">MR-J2S-_CP_</th><th></th><th colspan="2">MR-J4-_A_-RJ</th></tr><tr><th>No.58</th><th>No.27 (Note 1)</th><th></th><th>PC19</th><th>PA15</th></tr><tr><td>0 _ _ _</td><td>N</td><td>→</td><td>0 _ 0 _</td><td>N</td></tr><tr><td>1 _ _ _</td><td>N</td><td></td><td>0 _ 1 _</td><td>N × 32 (Note 2)</td></tr></table>Note 1. N = J2S setting value.
2. For dividing ratio settings, set a value 32 x the MR-J2S-_CP_ setting value for MR-J4-_A_-RJ [Pr. PA15].</td><td>4000</td></tr>
<tr><td></td><td></td><td></td><td></td><td>PC19</td><td>Encoder output pulse selection
Refer to the comparison table above for the setting method.</td><td>0000h</td></tr>
<tr><td>28</td><td>Internal torque limit 1
Limit the servo motor torque assuming that the maximum torque is 100%.
When "0" is set, no torque is generated.
Setting range: 0 to 100</td><td>100</td><td>100</td><td>PA11</td><td>Forward rotation torque limit
You can limit the torque generated by the servo motor.
Set the same value as for MR-J2S-_CP_.</td><td>100.0</td></tr>
<tr><td></td><td></td><td></td><td></td><td>PA12</td><td>Reverse rotation torque limit
You can limit the torque generated by the servo motor.
Set the same value as for MR-J2S-_CP_.</td><td>100.0</td></tr>
<tr><td>29</td><td>Internal torque limit 2
Limit the servo motor torque assuming that the maximum torque is 100%.
When "0" is set, no torque is generated.
Enabled by turning on the internal torque limit selection (TL2).
Setting range: 0 to 100</td><td>100</td><td>100</td><td>PC35</td><td>Internal torque limit 2
Used to set the parameter assuming that the maximum torque is 100.0%. Set for limiting the torque of the servo motor.
However, when "0.0" is set, no torque is generated.
Turning on TL1 (Internal torque limit selection) will enable the lower torque limit between the Internal torque limit 1 or 2.
Setting range: 0.0 to 100.0</td><td>100.0</td></tr>
</table>

MR-J2S-_CP_ or MR-J2S-_CL_				MR-J4-_A_-RJ		
No.	Name and function	Initial value		No.	Name and function	Initial value
		CP	CL			
30	Backlash compensation Set the backlash compensation that is compensated when the command direction is reversed. Compensate the number of backlash pulses reversely-directed against the home position return direction. In the absolute position detection system, compensation is performed reversely against the operating direction taken at power-on. e: Depending on the software version of servo amplifier, the setting range varies as follows: A4 version or later: 0 to 1600 A3 version or earlier: 0 to 1000 A1 version or later: 0 to 1600 A0 version: 0 to 1000	0	0	PT14	Backlash compensation Set the backlash compensation that is compensated when the command direction is reversed. Compensate the number of backlash pulses reversely-directed against the home position return direction. In the case of home position ignorance (servo-on position as home position), compensate the number of backlash pulses reversely-directed against the initial rotation after turning on the SON (servo-on) to establish the home position. Setting range: 0 to 65535	0
31	Analog monitor 1 offset Used to set the offset voltage of Analog monitor 1 (MO1). Setting range: -999 to 999 mV	0	0	PC39	Analog monitor 1 offset Used to set the offset voltage of MO1 (Analog monitor 1). Setting range: -9999 to 9999 mV	0
32	Analog monitor 2 offset Used to set the offset voltage of Analog monitor 2 (MO2). Setting range: -999 to 999 mV	0	0	PC40	Analog monitor 2 offset Used to set the offset voltage of MO2 (Analog monitor 2). Setting range: -9999 to 9999 mV	0
33	Electromagnetic brake sequence output Used to set the delay time (Tb) between MBR (Electromagnetic brake interlock) OFF and base circuit shut-off. Setting range: 0 to 1000 ms	100	100	PC16	Electromagnetic brake sequence output Used to set the delay time (Tb) between MBR (Electromagnetic brake interlock) OFF and base circuit shut-off. Setting range: 0 to 1000 ms Set the same value as for MR-J2S-_CP_.	0
34	Load to motor inertia ratio Used to set the motor inertia ratio to the servo motor shaft inertia moment. When auto tuning is selected, the auto tuning result is automatically used. Setting range: 0 to 1000; Unit: x1.0	70	70	PB06	Load to motor inertia ratio When auto tuning mode 1 is selected, the auto tuning result is automatically used. Setting range: 0.00 to 300.00; Unit: x1.0 Note that the setting unit is different from that for MR-J2S-_CP_. When setting a value manually, set a value 0.1 x the MR-J2S-_CP_ setting value.	7.00
35	Position loop gain 2 Used to set the gain of the position loop. Set this parameter to increase the position response to level load disturbance. Higher setting increases the response level but is liable to generate vibration and/or noise. When auto tuning is selected, the auto tuning result is automatically used.	35	35	PB08	Position loop gain Used to set the gain of the position loop. When auto tuning mode 1 is selected, the auto tuning result is automatically used.	37.0
36	Speed loop gain 1 Normally, it is unnecessary to change this parameter. Higher setting increases the response level but is liable to generate vibration and/or noise. When auto tuning is selected, the auto tuning result is automatically used.	177	177		No corresponding parameter This parameter is automatically set by the servo amplifier.	
37	Speed loop gain 2 Set this parameter when vibration occurs on machines of low rigidity or large backlash. Higher setting increases the response level but is liable to generate vibration and/or noise. When auto tuning is selected, the auto tuning result is automatically used.	817	817	PB09	Speed loop gain Used to set the gain of the speed loop. When auto tuning mode 1 is selected, the auto tuning result is automatically used.	823

MR-J2S-_CP_ or MR-J2S-_CL_				MR-J4-_A_-RJ		
No.	Name and function	Initial value		No.	Name and function	Initial value
		CP	CL			
38	Speed integral compensation. Used to set the integral time constant of the speed loop. When auto tuning is selected, the auto tuning result is automatically used.	48	48	PB10	Speed integral compensation Used to set the integral time constant of the speed loop. When auto tuning mode 1 is selected, the auto tuning result is automatically used.	33.7
39	Speed differential compensation Used to set the differential compensation. To enable the setting value, turn on PC (proportional control). Setting range: 0 to 1000	980	980	PB11	Speed differential compensation Used to set the differential compensation. To enable the setting value, turn on PC (proportional control). Setting range: 0 to 1000 Set the same value as for MR-J2S-_CP_.	980
40	JOG operation acceleration/deceleration time constant Set motor acceleration/deceleration time constant during the JOG operation. Setting range: 0 to 20000		100	PC01	JOG operation acceleration time constant Set the acceleration time constant during the JOG operation in the program method. Set the acceleration time required to reach the rated speed from 0 r/min. 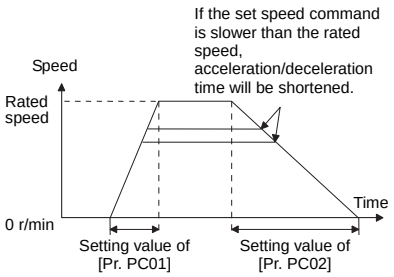 For example, for a servo motor with a rated speed of 3000 r/min, set 3000 (3 s) to increase the speed from 0 to 1000 r/min in 1 s. Even if the value more than 20000 ms, it will be clamped at 20000 ms. Setting range: 0 to 50000	0
				PC02	JOG operation deceleration time constant Set the deceleration time constant during the JOG operation in the program method. Set the deceleration time required to reach 0 r/min from the rated speed. Even if the value more than 20000 ms, it will be clamped at 20000 ms. Setting range: 0 to 50000	0
41	Home position return acceleration time constant Set the accel./decel. time constant of the time when returning to the home position. Setting range: 0 to 20000		100	PC30	Home position return acceleration time constant Use this parameter to perform the home return in the program method. Set the acceleration time constant of the time when returning to the home position. Set the acceleration time required to reach the rated speed from 0 r/min. Even if the value more than 20000 ms, it will be clamped at 20000 ms. Setting range: 0 to 50000	0
				PC31	Home position return deceleration time constant Use this parameter to perform the home return in the program method. Set the deceleration time constant of the time when returning to the home position. Set the deceleration time required to reach 0 r/min from the rated speed. Even if the value more than 20000 ms, it will be clamped at 20000 ms. Setting range: 0 to 50000	0

MR-J2S-_CP_ or MR-J2S-_CL_				MR-J4-_A_-RJ		
No.	Name and function	Initial value		No.	Name and function	Initial value
		CP	CL			
42	Home position return position data Set the current position of the time when the home position return is completed. Setting range: -32768 to 32767	0	0	PT08	Home position return position data Set the current position of the time when the home position return is completed. Note that the home position return position data is changed if the following parameters are changed. Perform the home position return again. • "Position data unit" of [Pr. PT01] • "Feed length multiplication (STM)" of [Pr. PT03] • "Home position return types" of [Pr. PT04] Setting range: -32768 to 32767	0
43	Travel distance after proximity dog Set the "travel distance after proximity dog" when the count type returns to the home position. Setting range: 0 to 65535	1000	1000	PT09	Travel distance after proximity dog When the count type, dog type rear end reference, count type front end reference and dog type front end reference return to the home position, set the "travel distance after proximity dog". Setting range: 0 to 65535	1000
44	Stopper type home position return - Stopper time When the stopper type returns to the home position, after pressing against the stopper, set the time between when the parameter No.45 (ZTT) reaches the torque limit and the time when setting the home position. Setting range: 5 to 1000	100	100	PT10	Stopper type home position return - Stopper time When the stopper type returns to the home position, after pressing against the stopper, set the time between when the [Pr. PT11 Stopper type home position return torque limit value] reaches the torque limit and the time when setting the home position. Setting the value between "0" and "4" will result in the same value as the one with "5" set. Setting range: 0 to 1000	100
45	Stopper type home position return torque limit value Set the torque limit value of the time when the stopper type returns to the home position by a ratio [%] to the maximum torque. Setting range: 1 to 100	15	15	PT11	Stopper type home position return torque limit value Set the torque limit value of the time when the stopper type returns to the home position by a ratio [%] to the maximum torque. Setting "0.0" will result in the same value as the one with "1.0" set. Setting range: 0:0 to 100.0	15.0

MR-J2S-_CP_ or MR-J2S-_CL_				MR-J4-_A_-RJ		
No.	Name and function	Initial value CP	Initial value CL	No.	Name and function	Initial value
46 47	Software limit + Set the address increasing side of the software stroke limit. Setting the same value as the one for the "software limit -" will disable the software limit. Use the same code for [Pr. 46] and [Pr. 47]. Otherwise, a parameter error occurs. Address: □□□□□□ Upper 3 digits — Parameter No.46 Lower 3 digits — Parameter No.47 Setting range: -999999 to 999999	0	0	PT15 PT16	Software limit + Set the address increasing side of the software stroke limit. One set consists of an upper level and lower level. Address: __ __ __ __ __ __ Upper 3 digits — [Pr. PT16] Lower 3 digits — [Pr. PT15] The stop method follows the "stop method selection at the software limit detection" of [Pr. PD30]. The initial value is "Sudden stop (Home position erased)". Setting the same value as the one for the "software limit -" will disable the software limit. Use the same code for [Pr. PT15] and [Pr. PT16]. If a different code is set, it will be recognized as a negative code data. Setting range: -999999 to 999999	0
48 49	Software limit - Set the address decreasing side of the software stroke limit. Setting the same value as the one for the "software limit +" will disable the software limit. Use the same code for [Pr. 48] and [Pr. 49]. Otherwise, a parameter error occurs. Address: □□□□□□ Upper 3 digits — Parameter No.48 Lower 3 digits — Parameter No.49 Setting range: -999999 to 999999	0	0	PT17 PT18	Software limit - Set the address decreasing side of the software stroke limit. One set consists of an upper level and lower level. Address: __ __ __ __ __ __ Upper 3 digits — [Pr. PT18] Lower 3 digits — [Pr. PT17] The stop method follows the "stop method selection at the software limit detection" of [Pr. PD30]. The initial value is "Sudden stop (Home position erased)". Setting the same value as the one for the "software limit +" will disable the software limit. Use the same code for [Pr. PT17] and [Pr. PT18]. If a different code is set, it will be recognized as a negative code data. Setting range: -999999 to 999999	0
50 51	Position range output address + Set the address increasing side of the position range output address. Use the same code for [Pr. 50] and [Pr. 51]. Otherwise, a parameter error occurs. Set the range where the position range (POT) is turned on between [Pr. 50] and [Pr. 53]. Address: □□□□□□ Upper 3 digits — Parameter No.50 Lower 3 digits — Parameter No.51 Setting range: -999999 to 999999	0	0	PT19 PT20	Position range output address + Set the address increasing side of the position range output address. One set consists of an upper level and lower level. Set the range where the POT (Position range) is turned on between [Pr. PT19] and [Pr. PT22]. Address: __ __ __ __ __ __ Upper 3 digits — [Pr. PT20] Lower 3 digits — [Pr. PT19] Use the same code for [Pr. PT19] and [Pr. PT20]. [AL. 37 parameter error] occurs when a different code is set. To change the setting, make sure to set the lower 3 digit data first before setting the upper 3 digit data. Setting range: -999999 to 999999	0

MR-J2S-_CP_ or MR-J2S-_CL_				MR-J4-_A_-RJ		
No.	Name and function	Initial value CP	Initial value CL	No.	Name and function	Initial value
52 53	Position range output address - Set the address decreasing side of the position range output address. Use the same code for [Pr. 52] and [Pr. 53]. Otherwise, a parameter error occurs. Address: □□□□□□ Upper 3 digits / Lower 3 digits Parameter No.53 Parameter No.52 Setting range: -999999 to 999999	0	0	PT21 PT22	Position range output address - Set the address decreasing side of the position range output address. One set consists of an upper level and lower level. Set the range where the POT (Position range) is turned on between [Pr. PT19] and [Pr. PT22]. Address: __ __ __ __ __ __ Upper 3 digits Lower 3 digits [Pr. PT21] [Pr. PT22] Use the same code for [Pr. PT21] and [Pr. PT22]. [AL. 37 parameter error] occurs when a different code is set. To change the setting, make sure to set the lower 3 digit data first before setting the upper 3 digit data. Setting range: -999999 to 999999	0
55	Function selection 6 Select the handling method for the base circuit when RES (Reset) is enabled. 0 | | 0 | 0 Used to select the operation method when RES (Reset) is ON 0: Base circuit shut-off 1: No base circuit shut-off	0000h	0000h	PD30	Function selection D-1 Used to select the base circuit status when RES (Reset) is ON. 0 | | | 0 Operation to be performed for the short-circuit of RES 0: Base circuit shut-off. 1: No base circuit shut-off Set the same value as for MR-J2S-_CP_.	0000h
57	Function selection 8 Used to select the serial communication protocol. 0 | | | 0 Protocol checksum selection 0: Yes (Add checksum) 1: No (Do not add checksum) Protocol station number selection 0: With station numbers 1: No station numbers	0000h	0000h	PF01	Used to select the protocol of function selection F-1 serial communication. (Supported version: A3 version or later) 0 | | | 0 Protocol checksum selection 0: Yes (Add checksum) 1: No (Do not add checksum) Protocol station number selection 0: With station numbers 1: No station numbers	0000h
58	Function selection 9 Used to select the encoder output pulse direction and encoder pulse output setting. | | 0 | 0 Encoder pulse output phase changing Used to change the output A-phase and B-phase positions of the encoder. Setting value / Servo motor rotation direction: CCW, CW 0: A phase, B phase 1: A phase, B phase Encoder pulse setting selection (refer to parameter No.27) 0: Output pulse designation 1: Division ratio setting	0000h	0000h	PC19	Encoder output pulse selection 0 0 | | Encoder pulse output phase changing Changes the positions of the pulse output A-phase and B-phase Setting value / Servo motor rotation direction: CCW, CW 0: A phase, B phase 1: A phase, B phase Encoder output pulse setting selection 0: Output pulse setting 1: Dividing ratio setting 2: Set the output pulse same as command pulse 3: A/B-phase pulse electronic gear setting 4: A/B-phase pulse through setting Set the same value as for MR-J2S-_CP_.	0000h

MR-J2S-_CP_ or MR-J2S-_CL_				MR-J4-_A_-RJ		
No.	Name and function	Initial value CP	Initial value CL	No.	Name and function	Initial value
59	Function selection A Select the alarm code and torque limit rotation direction.	0000h	0000h	PD33	Function selection D-4	0000h
				PD34	Function selection D-5	0000h

59 — Function selection A

Select the alarm code and torque limit rotation direction.

		0	0

Change in servo motor rotation direction

Setting value	CCW rotation	CW rotation
0	○	○
1	○	
2		○

Alarm code output setting

Setting value	Connector pin details		
	CN1B-19	CN1A-18	CN1A-19
0	Outputs signals assigned to each pin		
1	Outputs the alarm code when an alarm code is generated		

(Note): Alarm code			Alarm display	Name
Pin CN1B 19	Pin CN1A 18	Pin CN1A 19		
0	0	0	88888	Watchdog
			AL.12	Memory error 1
			AL.13	Clock error
			AL.15	Memory error 2
			AL.17	Board error
			AL.19	Memory error 3
			AL.37	Parameter error
			AL.39	[CL] Program error
			AL.8A	Serial communication time-out error
			AL.8E	Serial communication error
0	0	1	AL.30	Regenerative error
			AL.33	Overvoltage
0	1	0	AL.10	Undervoltage
0	1	1	AL.45	Main circuit device overheat
			AL.46	Servo motor overheat
			AL.50	Overload 1
			AL.51	Overload 2
1	0	0	AL.24	Main circuit error
			AL.32	Overcurrent
1	0	1	AL.31	Overspeed
			AL.35	Command pulse frequency error
			AL.52	Error excessive
			AL.61	[CP] Home operation alarm
			AL.63	[CL] Home position return uncompleted
			AL.64	[CL] Home position setting error
1	1	0	AL.16	Encoder error 1
			AL.1A	Motor combination error
			AL.20	Encoder error 2
			AL.25	Absolute position erased

Note. 0: OFF between SGs (open)
1: ON between SGs (short-circuit)

PD33 — Function selection D-4

Setting digit	Function
_ x _ _	Rotation direction selection enabling torque limit Select the rotation direction that enables the internal torque limit 2 and external torque limit. 0: Enabled in both CCW and CW. 1: Enabled in CCW 2: Enabled in CW

PD34 — Function selection D-5

Setting digit	Function
_ _ _ x	Alarm code output Select the output of alarm code. Alarm codes are outputted to pins CN1-22, CN1-23, and CN1-24. 0: Disabled 1: Enabled For details on alarm codes, refer to Chapter 8.

MR-J2S-_CP_ or MR-J2S-_CL_				MR-J4-_A_-RJ		
No.	Name and function	Initial value CP	Initial value CL	No.	Name and function	Initial value
61	Machine resonance suppression filter 1 Select the machine resonance suppression filter.	0000h	0000h	PB01	Adaptive tuning mode (adaptive filter II) Used to set the adaptive filter tuning. Select the adjustment mode of machine resonance suppression filter 1.	0000h
				PB13	Machine resonance suppression filter 1 Used to set the notch frequency of machine resonance suppression filter 1. When "Automatic setting (_ _ _ 1)" is selected in "Filter tuning mode selection" of [Pr. PB01], the adjustment result is reflected. When "Manual setting (_ _ _ 2)" is selected in "Filter tuning mode selection" of [Pr. PB01], this setting value is enabled. Setting range: 10 to 4500 Set a value according to the setting frequency of MR-J2S-_CP_.	4500
				PB14	Notch shape selection 1 Used to set the shape of the machine resonance suppression filter 1. When "Automatic setting (_ _ _ 1)" is selected in "Filter tuning mode selection" of [Pr. PB01], the adjustment result is reflected. Set manually for the manual setting.	0000h

No. 61 — Machine resonance suppression filter 1

Select the machine resonance suppression filter.

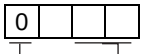

Notch frequency selection
Set "00" when the active vibration suppression control is set as "effective" or "maintain" (parameter No. 63: _ 1 _ _ or _ 2 _ _).

Setting value	Frequency	Setting value	Frequency	Setting value	Frequency	Setting value	Frequency
00	Disabled	08	562.5	10	281.3	18	187.5
01	4500	09	500	11	264.7	19	180
02	2250	0A	450	12	250	1A	173.1
03	1500	0B	409.1	13	236.8	1B	166.7
04	1125	0C	375	14	225	1C	160.1
05	900	0D	346.2	15	214.3	1D	155.2
06	750	0E	321.4	16	204.5	1E	150
07	642.9	0F	300	17	195.7	1F	145.2

Notch depth selection

Setting value	Response	Gain
0	Deep	-40dB
1	to	-14dB
2		-8dB
3	Shallow	-4dB

No. PB01 — Adaptive tuning mode (adaptive filter II)

Used to set the adaptive filter tuning. Select the adjustment mode of machine resonance suppression filter 1.

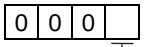

Filter tuning mode selection
0: Disabled
1: Automatic setting
(Do not set automatic for the torque control.)
2: Manual setting

Refer to the comparison table below for the setting method.

Setting comparison table for machine resonance suppression filter 1

MR-J2S-_CP_			MR-J4-_A_-RJ		
No.61	No.63		PB01	PB13	PB14
0 _ 0 0	_ 0 _ _		0 0 0 0	Setting not required	
0 _ 0 1 to 0 _ 1 F	_ 0 _ _	→	0 0 0 2	Set a value according to MR-J2S. (Note)	0 0 _ 0 (Note)
0 _ 0 0	_ 1 _ _		0 0 0 1	Automatic setting	
0 _ 0 0	_ 2 _ _		0 0 0 1	Automatic setting	

Note Set a frequency and notch depth according to the values of MR-J2S-_CP_.
Set the notch width to “0: α = 2”.
For details, refer to [Pr. PB13] and [Pr. PB14] shown below.

No. PB13 — Machine resonance suppression filter 1

Used to set the notch frequency of machine resonance suppression filter 1.

When "Automatic setting (_ _ _ 1)" is selected in "Filter tuning mode selection" of [Pr. PB01], the adjustment result is reflected.

When "Manual setting (_ _ _ 2)" is selected in "Filter tuning mode selection" of [Pr. PB01], this setting value is enabled.

Setting range: 10 to 4500

Set a value according to the setting frequency of MR-J2S-_CP_.

No. PB14 — Notch shape selection 1

Used to set the shape of the machine resonance suppression filter 1.

When "Automatic setting (_ _ _ 1)" is selected in "Filter tuning mode selection" of [Pr. PB01], the adjustment result is reflected.

Set manually for the manual setting.

Notch depth selection
0: -40dB
1: -14dB
2: -8dB
3: -4dB

Notch width selection
0: α=2
1: α=3
2: α=4
3: α=5

Set the notch depth according to the setting of MR-J2S-_CP_.

Set the notch width to "0: α = 2".

<table>
<tr><th colspan="4">MR-J2S-_CP_ or MR-J2S-_CL_</th><th colspan="3">MR-J4-_A_-RJ</th></tr>
<tr><th rowspan="2">No.</th><th rowspan="2">Name and function</th><th colspan="2">Initial value</th><th rowspan="2">No.</th><th rowspan="2">Name and function</th><th rowspan="2">Initial value</th></tr>
<tr><th>CP</th><th>CL</th></tr>
<tr><td rowspan="2">62</td><td rowspan="2">Machine resonance suppression filter 2
Used to set the machine resonance suppression filter.

0 _ _ _
Notch frequency
Use the same setting as the parameter No.61.
It is unnecessary to set “00” even if "Enabled" or "Retained" is selected for the adaptive vibration suppression control.

Notch depth
Use the same setting as the parameter No.61.</td><td rowspan="2">0000h</td><td rowspan="2">0000h</td><td>PB15</td><td>Machine resonance suppression filter 2
Used to set the notch frequency of machine resonance suppression filter 2.
When "Enabled (_ _ _ 1)" in "Machine resonance suppression filter 2 selection" of [Pr. PB16] is selected, this parameter is enabled.
Setting range: 10 to 4500
Set a value according to the setting of MR-J2S-_CP_.</td><td>4500</td></tr>
<tr><td>PB16</td><td>Notch shape selection 2
Used to set the shape of the machine resonance suppression filter 2.

0 _ _ _
Machine resonance suppression filter 2 selection
0: Disabled
1: Enabled

Notch depth selection
0: -40dB
1: -14dB
2: -8dB
3: -4dB

Notch width selection
0: α=2
1: α=3
2: α=4
3: α=5

Refer to the comparison table below for the setting method.
Setting comparison table for machine resonance suppression filter 2
<table><tr><th>MR-J2S-_CP_</th><th></th><th colspan="2">MR-J4-_A_-RJ</th></tr><tr><th>No62</th><th></th><th>PB15</th><th>PB16</th></tr><tr><td>0 _ 0 0</td><td></td><td>Setting not required</td><td>0 0 0 0</td></tr><tr><td>0 _ 0 1
to
0 _ 1 F</td><td>→</td><td>Set a value according to J2S.
(Note 2)</td><td>0 0 _ 1
(Note 1)</td></tr></table>Note 1. Set the notch depth according to MR-J2S-_CP_. Set the notch width to "0: α = 2".
2. Set a value while referring to [Pr. PB15].</td><td>0000h</td></tr>
</table>

MR-J2S-_CP_ or MR-J2S-_CL_				MR-J4-_A_-RJ		
No.	Name and function	Initial value CP	Initial value CL	No.	Name and function	Initial value
63	Low-pass filter/adaptive vibration suppression control Select the low-pass filter/adaptive vibration suppression control. [ ][ ][ ][0] Low-pass filter selection 0: Available (Automatic adjustment) 1: Disabled When available is selected, the filter in the zone expressed by the following formula is automatically set. For 1 kW or less $\frac{\text{VG2 setting value} \times 10}{2\pi \times (1 + \text{GD2 setting value} \times 0.1)}$ [Hz] For 2 kW or more $\frac{\text{VG2 setting value} \times 5}{2\pi \times (1 + \text{GD2 setting value} \times 0.1)}$ [Hz] Adaptive vibration suppression control selection Selecting "Enabled" or "Retained" for the adaptive vibration suppression control will disable the machine resonance suppression filter 1 (Parameter No.61). 0: Disabled 1: Available Usually, machine resonance frequency is detected, and a filter corresponding to the resonance is generated to control machine vibration. 2: Maintenance Stops detection of machine resonance while keeping the characteristics of the filter generated until that moment. Adaptive vibration suppression control level selection Used to set the machine resonance detection sensitivity. 0: Normal 1: High sensitive	0000h	0000h	PB23	Low-pass filter selection [0][0][ ][0] Low-pass filter 0: Automatic setting 1: Manual setting 2: Disabled Set "0000 (automatic setting)".	0000h
				PB18	Low-pass filter setting One of the following statuses is applied, depending on how [Pr. PB23] is set. PB23 / PB18 _ _ 0 _ (Initial value) / Automatic setting _ _ 1 _ / Setting value enabled _ _ 2 _ / Setting value disabled Nothing needs to be set due to automatic setting.	3141
				PB01	Adaptive tuning mode (adaptive filter II) Refer to MR-J2S-_CP_ [Pr. 61].	0000h

MR-J2S-_CP_ or MR-J2S-_CL_				MR-J4-_A_-RJ		
No.	Name and function	Initial value		No.	Name and function	Initial value
		CP	CL			
64	Load to motor inertia ratio 2 Used to set the load to motor inertia ratio when gain switching is enabled. Setting range: 0 to 3000; Unit: x0.1	70	70	PB29	Load to motor inertia ratio after gain switching Used to set the load to motor inertia ratio when gain switching is enabled. This parameter is enabled only when "Manual mode (_ _ _ 3)" is selected in "Gain adjustment mode selection" of [Pr. PA08]. Setting range: 0.00 to 300.00; Unit: x1.0 Note that the setting unit is different from that for MR-J2S-_CP_. When setting a value, set a value 0.1 x the MR-J2S-_CP_ setting value.	7.00
65	Position loop gain 2 changing ratio Used to set the changing ratio for position loop gain 2 when the gain switching is enabled. This parameter is enabled when auto tuning is disabled. Setting range: 10 to 200	100	100	PB30	Position loop gain after gain switching When a value smaller than 1.0 rad/s is set, the value will be the same as the setting value of [Pr. PB08]. This parameter is enabled only when "Manual mode (_ _ _ 3)" is selected in "Gain adjustment mode selection" of [Pr. PA08]. Setting range: 0.0 to 2000.0 Because the setting unit is different from that for MR-J2S-_CP_, calculate the setting value using the equation below and set it. [Pr. PB30] = [Pr. PB08] × MR-J2S-_CP_ [Pr. 65]/100	0.0
66	Speed loop gain 2 changing ratio Used to set the changing ratio for speed loop gain 2 when the gain switching is enabled. This parameter is enabled when auto tuning is disabled. Setting range: 10 to 200	100	100	PB31	Speed loop gain after gain switching When a value smaller than 20 rad/s is set, the value will be the same as the setting value of [Pr. PB09]. This parameter is enabled only when "Manual mode (_ _ _ 3)" is selected in "Gain adjustment mode selection" of [Pr. PA08]. Setting range: 0 to 65535 Because the setting unit is different from that for MR-J2S-_CP_, calculate the setting value using the equation below and set it. [Pr. PB31] = [Pr. PB09] × MR-J2S-_CP_ [Pr. 66]/100	0
67	Speed integral compensation changing ratio Used to set the changing ratio for speed integral compensation when the gain switching is enabled. This parameter is enabled when auto tuning is disabled. Setting range: 50 to 1000	100	100	PB32	Speed integral compensation after gain switching When a value smaller than 0.1 ms is set, the value will be the same as the setting value of [Pr. PB10]. This parameter is enabled only when "Manual mode (_ _ _ 3)" is selected in "Gain adjustment mode selection" of [Pr. PA08]. Setting range: 0.0 to 5000.0 Because the setting unit is different from that for MR-J2S-_CP_, calculate the setting value using the equation below and set it. [Pr. PB32] = [Pr. PB10] × MR-J2S-_CP_ [Pr. 67]/100	0.0
68	Gain switching selection Select the gain switching condition. 0 0 0 _ └ Gain switching selection Gain will be changed under the following conditions based on the setting value of parameters No.64 to No67. 0: Disabled 1: Gain switching (CDP) is ON. 2: The appointed frequency is more than the setting value of parameter No. 69. 3: The droop pulse is more than the setting value of parameter No. 69. 4: The servo motor speed is more than the setting value of parameter No. 69.	0000h	0000h	PB26	Gain switching function Select the gain switching condition. Refer to the comparison table below for the setting method. Gain switching selection comparison table MR-J2S-_CP_ No.68: 0 0 0 0, 0 0 0 1, 0 0 0 2, 0 0 0 3, 0 0 0 4 → MR-J4-_A_-RJ PB26: 0 0 0 0, 0 0 0 1, 0 0 0 2, 0 0 0 3, 0 0 0 4	0000h

MR-J2S-_CP_ or MR-J2S-_CL_				MR-J4-_A_-RJ		
No.	Name and function	Initial value CP	Initial value CL	No.	Name and function	Initial value
69	Gain switching condition Used to set the values for the gain switching conditions (command frequency, droop pulses, and servo motor speed) selected in [Pr. 68]. The set value unit differs depending on the switching condition item. Setting range: 0 to 9999	10	10	PB27	Gain switching condition Used to set the values for the gain switching conditions (command frequency, droop pulses, and servo motor speed) selected in [Pr. PB26]. The set value unit differs depending on the switching condition item. Setting range: 0 to 9999 Set the same value as for MR-J2S-_CP_.	10
70	Gain switching time constant Used to set the time constant at which the gains will switch in response to the conditions set in [Pr. 68] and [Pr. 69]. Setting range: 0 to 100	1	1	PB28	Gain switching time constant Used to set the time constant at which the gains will switch in response to the conditions set in [Pr. PB26] and [Pr. PB27]. Setting range: 0 to 100 Set the same value as for MR-J2S-_CP_.	1
74	OUT1 output time setting Set the output time when the program output 1 (OUT1) is turned on by the OUTON command. If "0" is set, it remains turned on. Setting range: 0 to 2000; Unit: 10 ms		0	PT23	OUT1 output setting time Set the output time when the program output 1 (OUT1) is turned on by the OUTON command. If "0" is set, it remains turned on. Use the OUTOF command to turn off. Setting range: 0 to 20000	0
75	OUT2 output time setting Set the output time when the program output 2 (OUT2) is turned on by the OUTON command. If "0" is set, it remains turned on. Setting range: 0 to 2000; Unit: 10 ms		0	PT24	OUT2 output setting time Set the output time when the program output 2 (OUT2) is turned on by the OUTON command. If "0" is set, it remains turned on. Use the OUTOF command to turn off. Setting range: 0 to 20000	0
76	OUT3 output time setting Set the output time when the program output 3 (OUT3) is turned on by the OUTON command. If "0" is set, it remains turned on. Setting range: 0 to 2000; Unit: 10 ms		0	PT25	OUT3 output setting time Set the output time when the program output 3 (OUT3) is turned on by the OUTON command. If "0" is set, it remains turned on. Use the OUTOF command to turn off. Setting range: 0 to 20000	0
77	Program input polarity selection 1 Select the device that reverses the input polarity for the program input 1 (PI1), program input (PI2), and program input (PI3). 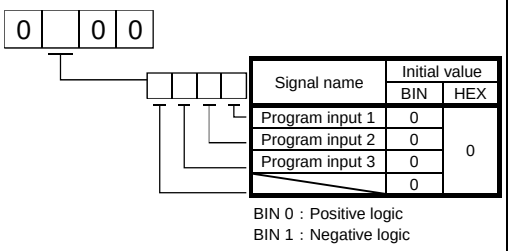 BIN 0 : Positive logic BIN 1 : Negative logic		0000h	PT29	Function selection T-3 Set the polarities of PI1, PI2 and PI3. Setting digit: _ _ x _ (HEX) Function: _ _ _ x (BIN): PI1 (Program input 1) polarity selection 0: Positive logic 1: Negative logic _ _ x _ (BIN): PI2 (Program input 2) polarity selection 0: Positive logic 1: Negative logic _ x _ _ (BIN): PI3 (Program input 3) polarity selection 0: Positive logic 1: Negative logic x _ _ _ (BIN): For manufacturer setting	0000h

Signal name	Initial value BIN	Initial value HEX
Program input 1	0	0
Program input 2	0	
Program input 3	0	
	0	

3.7 Comparison of Communication Commands

[Communication command comparison between MR-J2S-_CP_ series and MR-J4-_A_-RJ series]
Table 4.1 compares the read commands between the MR-J2S-_CP_ series and MR-J4-_A_-RJ series ([Pr. PT01]: when setting "2 _ _ _"), and table 4.2 compares the write commands. The functions added in the MR-J4-A-RJ series are not included here. For details, refer to "MR-J4-_A_-RJ/MR-J4-03A6-RJ Servo Amplifier Instruction Manual (Positioning Mode (SH(NA)030143))".

POINT

- [Pr. PT01]: MR Configurator2 cannot be used when the parameter is set to "2 _ _ _".
- Even if a command or data No. is the same between different model servo amplifiers, its description may differ.
- Functions with difference are shown with shading.

[Table 4.1] Compares the read commands between MR-J2S-_CP_ and MR-J4-_A_-RJ ([Pr. PT01]: when setting "2 _ _ _").

(1) Status Display (command [0] [1])

Command	Data No.	Description	Displayed items		Frame length
			MR-J2S-_CP_	MR-J4-_A_-RJ [Pr. PT01]: when setting "2 _ _ _"	
[0] [1]	[8] [0]	Data value of status display and processed information	Current position	Current position	12
	[8] [1]		Command position:	Command position:	
	[8] [2]		Command remaining distance	Command remaining distance	
	[8] [3]		Point table No.	Point table No.	
	[8] [4]		Cumulative Feedback Pulses	Cumulative Feedback Pulses	
	[8] [5]		Servo motor speed	Servo motor speed	
	[8] [6]		Droop pulses	Droop pulses	
	[8] [7]		Override	Override	
	[8] [8]		Torque limit voltage	Torque limit voltage	
	[8] [9]		Regenerative load ratio	Regenerative load ratio	
	[8] [A]		Effective load ratio	Effective load ratio	
	[8] [B]		Peak load ratio	Peak load ratio	
	[8] [C]		Instantaneous torque	Instantaneous torque	
	[8] [D]		Within one-revolution position	Within one-revolution position	
	[8] [E]		ABS counter	ABS counter	
	[8] [F]		Load to inertia moment ratio	Load to inertia moment ratio	
	[9] [0]		Bus voltage	Bus voltage	

(2) Parameter (command [0] [5])

Command	Data No.	Description		Frame length
		MR-J2S-_CP_	MR-J4-_A_-RJ [Pr. PT01]: when setting "2 _ _ _"	
[0] [5]	[0] [0] to [5] [A]	Current values of each parameter The data number converted from hexadecimal to decimal corresponds to the parameter No.	Current values of each parameter **Read the current parameter in the parameter group specified by the command [8][5] + data No. [0][0]. Thus, make sure to specify the parameter group by the command [8][5] + data No. [0][0] before reading the current value.** The data number converted from hexadecimal to decimal corresponds to the parameter No.	8

(3) External I/O signal (command [1] [2])

Command	Data No.	Description		Frame length
		MR-J2S-_CP_	MR-J4-_A_-RJ [Pr. PT01]: when setting "2 _ _ _"	
[1] [2]	[0] [0]	Input Device Status	Input Device Status	8
	[4] [0]	External Input Pin Status	External Input Pin Status	
	[6] [0]	Input device status turned on by the communication	Input device status turned on by the communication	
	[8] [0]	Output Device Status	Output Device Status	
	[C] [0]	External Output Pin Status	External Output Pin Status	

(4) Current alarm (command [0] [2])

Command	Data No.	Description		Frame length
		MR-J2S-_CP_	MR-J4-_A_-RJ [Pr. PT01]: when setting "2 _ _ _"	
[0] [2]	[0] [0]	Alarm No. of alarm currently generated	Alarm No. of alarm currently generated	4

(5) Status display at alarm occurrence (command [3] [5])

Command	Data No.	Description	Displayed items		Frame length
			MR-J2S-_CP_	MR-J4-_A_-RJ [Pr. PT01]: when setting "2 _ _ _"	
[3] [5]	[8] [0]	Data value of status display and processed information when an alarm occurs	Current position	Current position	12
	[8] [1]		Command position	Command position	
	[8] [2]		Command remaining distance	Command remaining distance	
	[8] [3]		Point table No.	Point table No.	
	[8] [4]		Cumulative Feedback Pulses	Cumulative Feedback Pulses	
	[8] [5]		Servo motor speed	Servo motor speed	
	[8] [6]		Droop pulses	Droop pulses	
	[8] [7]		Override	Override	
	[8] [8]		Torque limit voltage	Torque limit voltage	
	[8] [9]		Regenerative load ratio	Regenerative load ratio	
	[8] [A]		Effective load ratio	Effective load ratio	
	[8] [B]		Peak load ratio	Peak load ratio	
	[8] [C]		Instantaneous torque	Instantaneous torque	
	[8] [D]		Within one-revolution position	Within one-revolution position	
	[8] [E]		ABS counter	ABS counter	
	[8] [F]		Load to inertia moment ratio	Load to inertia moment ratio	
	[9] [0]		Bus voltage	Bus voltage	

(6) Point table (command [4] [0]/[5] [0]/[5] [4]/[5] [8]/[6] [0]/[6] [4])

Command	Data No.	Description		Frame length
		MR-J2S-_CP_	MR-J4-_A_-RJ [Pr. PT01]: when setting "2 _ _ _"	
[4] [0]	[0] [1] to [1] [F] (Note)	Reading the position data for each point table The data number converted from hexadecimal to decimal corresponds to the point table No.	Reading the position data for each point table The data number converted from hexadecimal to decimal corresponds to the point table No.	8
[5] [0]	[0] [1] to [1] [F] (Note)	Reading the speed data for each point table The data number converted from hexadecimal to decimal corresponds to the point table No.	Reading the speed data for each point table The data number converted from hexadecimal to decimal corresponds to the point table No.	
[5] [4]	[0] [1] to [1] [F] (Note)	Reading the acceleration time constant for each point table The data number converted from hexadecimal to decimal corresponds to the point table No.	Reading the acceleration time constant for each point table The data number converted from hexadecimal to decimal corresponds to the point table No.	
[5] [8]	[0] [1] to [1] [F] (Note)	Reading the deceleration time constant for each point table The data number converted from hexadecimal to decimal corresponds to the point table No.	Reading the deceleration time constant for each point table The data number converted from hexadecimal to decimal corresponds to the point table No.	
[6] [0]	[0] [1] to [1] [F] (Note)	Reading the dwell for each point table The data number converted from hexadecimal to decimal corresponds to the point table No.	Reading the dwell for each point table The data number converted from hexadecimal to decimal corresponds to the point table No.	
[6] [4]	[0] [1] to [1] [F] (Note)	Reading the sub function for each point table The data number converted from hexadecimal to decimal corresponds to the point table No.	Reading the sub function for each point table The data number converted from hexadecimal to decimal corresponds to the point table No.	

Note. MR-J4-_A_-RJ will be in the range between [0] [1] and [F] [F].

(7) Group setting (command [1] [F])

Command	Data No.	Description		Frame length
		MR-J2S-_CP_	MR-J4-_A_-RJ [Pr. PT01]: when setting "2 _ _ _"	
[1] [F]	[0] [0]	Reading the group setting value.	Reading the group setting value.	4

(8) Software version (command [0] [2])

Command	Data No.	Description		Frame length
		MR-J2S-_CP_	MR-J4-_A_-RJ [Pr. PT01]: when setting "2 _ _ _"	
[0] [2]	[7] [0]	Software version	Software version	16

[Table 4.2] Compares the write commands between MR-J2S-_CP_ and MR-J4-_A_-RJ ([Pr. PT01]: when setting "2 _ _ _").

(1) Status Display (command [8] [1])

Command	Data No.	MR-J2S-_CP_		MR-J4-_A_-RJ [Pr. PT01]: when setting "2 _ _ _"		Frame length
		Description	Setting range	Description	Setting range	
[8] [1]	[0] [0]	Erasing the status display data	1EA5	Erasing the status display data	1EA5	4

(2) Parameter (command [8] [4])

Command	Data No.	MR-J2S-_CP_		MR-J4-_A_-RJ [Pr. PT01]: when setting "2 _ _ _"		Frame length
		Description	Setting range	Description	Setting range	
[8] [4]	[0] [0] to [5] [A] (Note)	Writing each parameter The data number converted from hexadecimal to decimal corresponds to the parameter No.	Varies with the parameter.	Writing each parameter **Write the parameter in the parameter group specified by the command [85] + data No. [00]. Thus, make sure to specify the parameter group by the command [85] + data No. [00] before writing the value.** The data number converted from hexadecimal to decimal corresponds to the parameter No.	Varies with the parameter.	8

Note. MR-J4-_A_-RJ will be in the range between [0] [1] and [F] [F].

(3) External I/O signal (command [9] [2])

Command	Data No.	MR-J2S-_CP_		MR-J4-_A_-RJ [Pr. PT01]: when setting "2 _ _ _"		Frame length
		Description	Setting range	Description	Setting range	
[9] [2]	[6] [0]	Communication input device signal	Refer to "MR-J2S-_CP Servo Amplifier Instruction Manual" Section 15.12.5.	Communication input device signal	Refer to "MR-J4-_A_(-RJ) Servo Amplifier Instruction Manual" Section 10.2.2.	8

(4) Alarm history (command [8] [2])

Command	Data No.	MR-J2S-_CP_		MR-J4-_A_-RJ [Pr. PT01]: when setting "2 _ _ _"		Frame length
		Description	Setting range	Description	Setting range	
[8] [2]	[2] [0]	Alarm History Clearing	1EA5	Alarm History Clearing	1EA5	4

(5) Current alarm (command [8] [2])

Command	Data No.	MR-J2S-_CP_		MR-J4-_A_-RJ [Pr. PT01]: when setting "2 _ _ _"		Frame length
		Description	Setting range	Description	Setting range	
[8] [2]	[0] [0]	Clearing alarms	1EA5	Clearing alarms	1EA5	4

(6) Point table (command [C] [0]/[C] [6]/[C] [7]/[C] [8]/[C] [A]/[C] [B])

Command	Data No.	MR-J2S-_CP_		MR-J4-_A_-RJ [Pr. PT01]: when setting "2 _ _ _"		Frame length
		Description	Setting range	Description	Setting range	
[C] [0]	[0] [1] to [1] [F] (Note)	Writing the position data for each point table The data number converted from hexadecimal to decimal corresponds to the point table No.	-999999 to 999999	Writing the position data for each point table The data number converted from hexadecimal to decimal corresponds to the point table No.	-999999 to 999999	8
[C] [6]	[0] [1] to [1] [F] (Note)	Writing the speed data for each point table The data number converted from hexadecimal to decimal corresponds to the point table No.	0 to Permissible speed	Writing the speed data for each point table The data number converted from hexadecimal to decimal corresponds to the point table No.	0 to Permissible speed	8
[C][7]	[0] [1] to [1] [F] (Note)	Writing the acceleration time constant for each point table The data number converted from hexadecimal to decimal corresponds to the point table No.	0 to 20000	Writing the acceleration time constant for each point table The data number converted from hexadecimal to decimal corresponds to the point table No.	0 to 20000	8
[C] [8]	[0] [1] to [1] [F] (Note)	Writing the deceleration time constant for each point table The data number converted from hexadecimal to decimal corresponds to the point table No.	0 to 20000	Writing the deceleration time constant for each point table The data number converted from hexadecimal to decimal corresponds to the point table No.	0 to 20000	8
[C] [A]	[0] [1] to [1] [F] (Note)	Writing the dwell for each point table The data number converted from hexadecimal to decimal corresponds to the point table No.	0 to 20000	Writing the dwell for each point table The data number converted from hexadecimal to decimal corresponds to the point table No.	0 to 20000	8
[C] [B]	[0] [1] to [1] [F] (Note)	Writing the sub function for each point table The data number converted from hexadecimal to decimal corresponds to the point table No.	0, 1	Writing the sub function for each point table The data number converted from hexadecimal to decimal corresponds to the point table No.	**0 to 3, 8 to 11**	8

Note. MR-J4-_A_-RJ will be in the range between [0] [1] and [F] [F].

(7) I/O device inhibition (command [9] [0])

Command	Data No.	MR-J2S-_CP_		MR-J4-_A_-RJ [Pr. PT01]: when setting "2 _ _ _"		Frame length
		Description	Setting range	Description	Setting range	
[9] [0]	[0] [0]	Turn off the input devices (except EMG, LSP and LSN), external analog input signal, and pulse train input regardless of the external ON/OFF state.	1EA5	Turn off the input devices (except EMG, LSP and LSN), external analog input signal, and pulse train input regardless of the external ON/OFF state.	1EA5	4
	[0] [3]	Disable all the output devices (DO). (Inhibit output)	1EA5	Disable all the output devices (DO). (Inhibit output)	1EA5	
	[1] [0]	Cancel the inhibition of the input devices (except EMG, LSP and LSN), external analog input signal, and pulse train input.	1EA5	Cancel the inhibition of the input devices (except EMG, LSP and LSN), external analog input signal, and pulse train input.	1EA5	
	[1] [3]	Cancel the inhibition of output devices.	1EA5	Cancel the inhibition of output devices.	1EA5	

(8) Operation mode selection (command [8] [B])

Command	Data No.	MR-J2S-_CP_		MR-J4-_A_-RJ [Pr. PT01]: when setting "2 _ _ _"		Frame length
		Description	Setting range	Description	Setting range	
[8] [B]	[0] [0]	Operation mode switching 0000: Test Operation Mode Cancellation 0001: JOG operation 0002: Positioning operation 0003: Motor-less operation 0004: Output signal (DO) forced output	Refer to the left column.	Operation mode switching 0000: Normal mode (When not in test operation mode) 0001: JOG operation 0002: Positioning operation mode 0004: DO forced output operation mode	Refer to the left column.	4

(9) Data for test operation mode (command [9] [2]/[A] [0])

Command	Data No.	MR-J2S-_CP_		MR-J4-_A_-RJ [Pr. PT01]: when setting "2 _ _ _"		Frame length
		Description	Setting range	Description	Setting range	
[9] [2]	[0] [0]	Input Signal During Test Operation	Refer to "MR-J2S-_CP Servo Amplifier Instruction Manual" Section 15.12.7.	Input Signal During Test Operation	Refer to "MR-J4-_A_(-RJ) Servo Amplifier Instruction Manual" Section 14.5.7.	8
	[A][0]	Signal Pin Forced Output	Refer to "MR-J2S-_CP Servo Amplifier Instruction Manual" Section 15.12.9.	Signal Pin Forced Output	Refer to "MR-J4-_A_(-RJ) Servo Amplifier Instruction Manual" Section 14.5.9.	8
[A] [0]	[1] [0]	Write the speed in the test operation mode (JOG operation/positioning operation).	0000-7FFF	Write the speed in the test operation mode (JOG operation/positioning operation).	0000-7FFF	4
	[1] [1]	Write the acceleration/deceleration time constants in the test operation mode (JOG operation/positioning operation).	00000000 to 7FFFFFFF	Write the acceleration/deceleration time constants in the test operation mode (JOG operation/positioning operation).	00000000 to 7FFFFFFF	8
	[1] [2]	Cancel the acceleration/deceleration time constants in the test operation mode (JOG operation/positioning operation).	1EA5			4
	[1] [3]	Write the pulse travel distance in the test operation mode (positioning operation).	80000000 to 7FFFFFFF	**Refer to Data No. [2] [0] and [2] [1].**		8
	[1] [5]	Temporary stop command for the test operation mode (positioning operation).	1EA5	**Refer to Data No. [4] [1].**		4
	[2] [0]			**Set the travel distance in the test operation mode (positioning operation).**	**00000000 to 7FFFFFFF**	8
	[2] [1]			**Select the positioning direction of the test operation (positioning operation).**	**0000 to 0001**	4
	[4] [0]			The start command for the test operation (positioning operation).	1EA5	4
	[4] [1]			**Use to stop the test drive (positioning operation) temporarily. Symbols "_" below indicate blanks. STOP: Temporary stop GO__: Restarting the remaining distance CLR_ : Clearing the remaining distance**	**STOP GO__ CLR_**	4

(10) Group setting (command [9] [F])

Command	Data No.	MR-J2S-_CP_		MR-J4-_A_-RJ [Pr. PT01]: when setting "2 _ _ _"		Frame length
		Description	Setting range	Description	Setting range	
[9] [F]	[0] [0]	Set groups	a to f	Set groups	a to f	4

[Communication command comparison between MR-J2S-_CL _ series and MR-J4-_A_-RJ series]
Table 4.3 compares the read commands between the MR-J2S-_CL_series and MR-J4-_A_-RJ series ([Pr. PT01]: when setting "3 _ _ _"), and table 4.4 compares the write commands. The functions added in the MR-J4-_A_-RJ series are not included here. For details, refer to "MR-J4-_A_(-RJ) Servo Amplifier Instruction Manual (SH(NA)030143))".

POINT
●[Pr. PT01]: MR Configurator2 cannot be used when the parameter is set to "3 _ _ _".

[Table 4.3] Compares the read commands between MR-J2S-_CL_and MR-J4-_A_-RJ ([Pr. PT01]: when setting "3 _ _ _").

(1) Status Display (command [0] [1])

Command	Data No.	Description	Displayed items		Frame length
			MR-J2S-_CL_	MR-J4-_A_-RJ [Pr. PT01]: when setting "3 _ _ _"	
[0] [1]	[8] [0]	Data value of status display and processed information	Current position	Current position	12
	[8] [1]		Command position	Command position	
	[8] [2]		Command remaining distance	Command remaining distance	
	[8] [3]		Program No.	Program No.	
	[8] [4]		Step No.	Step No.	
	[8] [5]		Cumulative Feedback Pulses	Cumulative Feedback Pulses	
	[8] [6]		Servo motor speed	Servo motor speed	
	[8] [7]		Droop pulses	Droop pulses	
	[8] [8]		Override	Override	
	[8] [9]		Torque limit voltage	Torque limit voltage	
	[8] [A]		Regenerative load ratio	Regenerative load ratio	
	[8] [B]		Effective load ratio	Effective load ratio	
	[8] [C]		Peak load ratio	Peak load ratio	
	[8] [D]		Instantaneous torque	Instantaneous torque	
	[8] [E]		Within one-revolution position	Within one-revolution position	
	[8] [F]		ABS counter	ABS counter	
	[9] [0]		Load to inertia moment ratio	Load to inertia moment ratio	
	[9] [1]		Bus voltage	Bus voltage	

(2) Parameter (command [0] [5])

Command	Data No.	Description		Frame length
		MR-J2S-_CL_	MR-J4-_A_-RJ [Pr. PT01]: when setting "3 _ _ _"	
[0] [5]	[0] [0] to [5] [A]	Current values of each parameter The data number converted from hexadecimal to decimal corresponds to the parameter No.	Current values of each parameter **Read the current parameter in the parameter group specified by the command [8] [5] + data No. [0] [0]. Thus, make sure to specify the parameter group by the command [8] [5] + data No. [0][0] before reading the current value.** The data number converted from hexadecimal to decimal corresponds to the parameter No.	8

(3) External I/O signal (command [1] [2])

Command	Data No.	Description		Frame length
		MR-J2S-_CL_	MR-J4-_A_-RJ [Pr. PT01]: when setting "3 _ _ _"	
[1] [2]	[0] [0]	Input Device Status	Input Device Status	8
	[4] [0]	External Input Pin Status	External Input Pin Status	
	[6] [0]	Input device status turned on by the communication	Input device status turned on by the communication	
	[8] [0]	Output Device Status	Output Device Status	
	[C] [0]	External Output Pin Status	External Output Pin Status	

(4) Current alarm (command [0] [2]/ [3] [5])

Command	Data No.	Description		Frame length
		MR-J2S-_CL_	MR-J4-_A_-RJ [Pr. PT01]: when setting "3 _ _ _"	
[0] [2]	[0] [0]	Alarm No. of alarm currently generated	Alarm No. of alarm currently generated	4

Command	Data No.	Description	Displayed items		Frame length
			MR-J2S-_CL_	MR-J4-_A_-RJ [Pr. PT01]: when setting "3 _ _ _"	
[3] [5]	[8] [0]	Data value of status display and processed information when an alarm occurs	Current position	Current position	12
	[8] [1]		Command position	Command position	
	[8] [2]		Command remaining distance	Command remaining distance	
	[8] [3]		Program No.	Program No.	
	[8] [4]		Step No.	Step No.	
	[8] [5]		Cumulative Feedback Pulses	Cumulative Feedback Pulses	
	[8] [6]		Servo motor speed	Servo motor speed	
	[8] [7]		Droop pulses	Droop pulses	
	[8] [8]		Override	Override	
	[8] [9]		Torque limit voltage	Torque limit voltage	
	[8] [A]		Regenerative load ratio	Regenerative load ratio	
	[8] [B]		Effective load ratio	Effective load ratio	
	[8] [C]		Peak load ratio	Peak load ratio	
	[8] [D]		Instantaneous torque	Instantaneous torque	
	[8] [E]		Within one-revolution position	Within one-revolution position	
	[8] [F]		ABS counter	ABS counter	
	[9] [0]		Load to inertia moment ratio	Load to inertia moment ratio	
	[9] [1]		Bus voltage	Bus voltage	

(5) Group setting (command [1] [F])

Command	Data No.	Description		Frame length
		MR-J2S-_CL_	MR-J4-_A_-RJ [Pr. PT01]: when setting "3 _ _ _"	
[1] [F]	[0] [0]	Reading the group setting value.	Reading the group setting value.	4

(6) Software version (command [0] [2])

Command	Data No.	Description		Frame length
		MR-J2S-_CL_	MR-J4-_A_-RJ [Pr. PT01]: when setting "3 _ _ _"	
[0] [2]	[7] [0]	Software version	Software version	16

[Table 4.4] Compares the write commands between MR-J2S-_CL_and MR-J4-_A_-RJ ([Pr. PT01]: when setting "3 _ _ _").

(1) Status Display (command [8] [1])

Command	Data No.	MR-J2S-_CL_		MR-J4-_A_-RJ [Pr. PT01]: when setting "3 _ _ _"		Frame length
		Description	Setting range	Description	Setting range	
[8] [1]	[0] [0]	Erasing the status display data	1EA5	Erasing the status display data	1EA5	4

(2) Parameter (command [8] [4])

Command	Data No.	MR-J2S-_CL_		MR-J4-_A_-RJ [Pr. PT01]: when setting "3 _ _ _"		Frame length
		Description	Setting range	Description	Setting range	
[8] [4]	[0] [0] to [5] [A] (Note)	Writing each parameter The data number converted from hexadecimal to decimal corresponds to the parameter No.	Varies with the parameter.	Writing each parameter **Write the parameter in the parameter group specified by the command [85] + data No. [00]. Thus, make sure to specify the parameter group by the command [85] + data No. [00] before writing the value.** The data number converted from hexadecimal to decimal corresponds to the parameter No.	Varies with the parameter.	8

Note. MR-J4-_A_-RJ will be in the range between [0][1] and [F] [F].

(3) External I/O signal (command [9] [2])

Command	Data No.	MR-J2S-_CL_		MR-J4-_A_-RJ [Pr. PT01]: when setting "3 _ _ _"		Frame length
		Description	Setting range	Description	Setting range	
[9] [2]	[6] [0]	Communication input device signal	Refer to "MR-J2S-_CL Servo Amplifier Instruction Manual" Section 15.12.5.	Communication input device signal	Refer to "MR-J4-_A_(-RJ) Servo Amplifier Instruction Manual" Section 10.2.2.	8

(4) Alarm history (command [8] [2])

Command	Data No.	MR-J2S-_CL_		MR-J4-_A_-RJ [Pr. PT01]: when setting "3 _ _ _"		Frame length
		Description	Setting range	Description	Setting range	
[8] [2]	[2] [0]	Alarm History Clearing	1EA5	Alarm History Clearing	1EA5	4

(5) Current alarm (command [8] [2])

Command	Data No.	MR-J2S-_CL_		MR-J4-_A_-RJ [Pr. PT01]: when setting "3 _ _ _"		Frame length
		Description	Setting range	Description	Setting range	
[8] [2]	[0] [0]	Clearing alarms	1EA5	Clearing alarms	1EA5	4

(6) I/O device inhibition (command [9] [0])

Command	Data No.	MR-J2S-_CL_		MR-J4-_A_-RJ [Pr. PT01]: when setting "3 _ _ _"		Frame length
		Description	Setting range	Description	Setting range	
[9] [0]	[0] [0]	Turn off the input devices (except EMG, LSP and LSN), external analog input signal, and pulse train input regardless of the external ON/OFF state.	1EA5	Turn off the input devices (except EMG, LSP and LSN), external analog input signal, and pulse train input regardless of the external ON/OFF state.	1EA5	4
	[0] [3]	Disable all the output devices (DO). (Inhibit output)	1EA5	Disable all the output devices (DO). (Inhibit output)	1EA5	
	[1] [0]	Cancel the inhibition of the input devices (except EMG, LSP and LSN), external analog input signal, and pulse train input.	1EA5	Cancel the inhibition of the input devices (except EMG, LSP and LSN), external analog input signal, and pulse train input.	1EA5	
	[1] [3]	Cancel the inhibition of output devices.	1EA5	Cancel the inhibition of output devices.	1EA5	

(7) Operation mode selection (command [8] [B])

Command	Data No.	MR-J2S-_CL_		MR-J4-_A_-RJ [Pr. PT01]: when setting "3 _ _ _"		Frame length
		Description	Setting range	Description	Setting range	
[8] [B]	[0] [0]	Operation mode switching 0000: Test Operation Mode Cancellation 0001: JOG operation 0002: Positioning operation 0003: Motor-less operation Output signal (DO) forced output	Refer to the left column.	Operation mode switching 0000: Normal mode (When not in the test operation mode) 0001: JOG operation 0002: Positioning operation mode DO forced output operation mode	Refer to the left column.	4

(8) Data for test operation mode (command [9] [2]/ [A] [0])

Command	Data No.	MR-J2S-_CL_		MR-J4-_A_-RJ [Pr. PT01]: when setting "3 _ _ _"		Frame length
		Description	Setting range	Description	Setting range	
[9] [2]	[0] [0]	Input Signal During Test Operation	Refer to "MR-J2S-_CL Servo Amplifier Instruction Manual" Section 15.12.7.	Input Signal During Test Operation	Refer to "MR-J4-_A_(-RJ) Servo Amplifier Instruction Manual" Section 14.5.7.	8
	[A] [0]	Signal Pin Forced Output	Refer to "MR-J2S-_CL Servo Amplifier Instruction Manual" Section 15.12.9.	Signal Pin Forced Output	Refer to "MR-J4-_A_(-RJ) Servo Amplifier Instruction Manual" Section 14.5.9.	8
[A] [0]	[1] [0]	Write the speed in the test operation mode (JOG operation/positioning operation).	0000 to 7FFF	Write the speed in the test operation mode (JOG operation/positioning operation).	0000 to 7FFF	4
	[1] [1]	Write the acceleration/deceleration time constants in the test operation mode (JOG operation/positioning operation).	00000000 to 7FFFFFFF	Write the acceleration/deceleration time constants in the test operation mode (JOG operation/positioning operation).	00000000 to 7FFFFFFF	8
	[1] [2]	Cancel the acceleration/deceleration time constants in the test operation mode (JOG operation/positioning operation).	1EA5			4
	[1] [3]	Write the pulse travel distance in the test operation mode (positioning operation).	80000000 to 7FFFFFFF	**Refer to Data No. [2] [0] and [2] [1].**		8
	[1] [5]	Temporary stop command for the test operation mode (positioning operation).	1EA5	**Refer to Data No. [4] [1].**		4
	[2][0]			**Set the travel distance in the test operation mode (positioning operation).**	**00000000 to 7FFFFFFF**	8
	[2][1]			**Select the positioning direction of the test operation (positioning operation).**	**0000 to 0001**	4
	[4][0]			The start command for the test operation (positioning operation).	1EA5	4
	[4][1]			**Use to stop the test drive (positioning operation) temporarily. Symbols "_" below indicate blanks. STOP: Temporary stop GO__: Restarting the remaining distance CLR_: Clearing the remaining distance**	**STOP GO__ CLR_**	4

(9) Group setting (command [9] [F])

Command	Data No.	MR-J2S-_CL_		MR-J4-_A_-RJ [Pr. PT01]: when setting "3 _ _ _"		Frame length
		Description	Setting range	Description	Setting range	
[9] [F]	[0] [0]	Set groups	a to f	Set groups	a to f	4

MEMO

Part 5
Review on Replacement of MR-J2S-30 kW or Higher Capacity Models with MR-J4-DU_

Part 5: Review on Replacement of MR-J2S-30 kW or Higher Capacity Models with MR-J4-DU_

1. FUNCTIONS AND CONFIGURATION

1.1 Differences Between MR-J2S-30 kW or Higher Capacity Models and MR-J4-DU_

Item	MR-J2S-30 kW or more series	MR-J4-DU_ series	Compatibility	Reference material/items
Converter unit	200 V class: MR-HP30KA (When using a servo amplifier of 37 kW, make sure that the power running output is 30 kW or less.) 400 V class: MR-HP55KA4	200 V class: MR-CR55K 400 V class: MR-CR55K4	×	1.2 Combination of a Converter Unit, Drive Unit, and Servo Motor
Installation	Installed in cabinet (Using an outside mounting attachment enables to attach a heat sink outside the cabinet.)	A heat sink is attached outside the cabinet.	×	1.4 Installation
Magnetic contactor control Connector	Not available	Available (Enabled by default. This is the initial value of [Pr. PA02], a converter unit parameter.)	—	1.5 Magnetic Contactor Control Connector (CNP1) [Exclusively for MR-J4-DU_]
Unit Power consumption display	Not available	Available (Use converter unit parameters [Pr. PA08] and [Pr. PA15] to set this value.)	—	3 PARAMETERS
SEMI-F47 function selection	Not available	Available (Use converter unit parameter [Pr. PA17] and [Pr. PA18], and drive unit parameter [Pr. PA20] and [Pr. PF25] to set this value.)	—	3 PARAMETERS

1.2 Combination of Converter Unit, Drive Unit, and Servo Motor

POINT

- MR-J2S-_A_/B_ cannot drive an HG motor. When the servo motor is replaced with an HG motor, simultaneous replacement with MR-J4-_A_/B_ and an HG motor is necessary.
- If the existing system is any of the combinations in the following table, it is recommended to replace both the servo amplifier and servo motor with an MRJ4-_A_ and HG motor at the same time. When an HG motor is adopted, the capacity of the servo amplifier needs to be changed. (Consider replacement, referring to "torque characteristics" described in "Part 8: Review on Replacement of Motor".)

Existing device models		Replacement models for simultaneous replacement (example)	
Servo motor	Servo amplifier	Servo motor	Servo amplifier
HA-LFS30K2(4)	MR-J2S-30K_(4)	HG-JR22K1M(4)	MR-J4-22K_(4)
HA-LFS37K2(4)	MR-J2S-37K_(4)	HG-JR30K1M(4)	MR-J4-DU30K_(4)
HA-LFS45K24	MR-J2S-45K_4	HG-JR37K1M4	MR-J4-DU37K_4
HA-LFS55K24	MR-J2S-55K_4	HG-JR45K1M4	MR-J4-DU45K_4
HA-LFS25K14	MR-J2S-30K_4	HG-JR25K14	MR-J4-22K_4

(1) MR-J2S series

(a) 200 V class

Converter unit	Servo amplifier	Servo motor HA-LFS_		
		1000 r/min	1500 r/min	2000 r/min
MR-HP30KA	MR-J2S-30KA/B	30K1	30K1M	30K2
	MR-J2S-37KA/B	37K1 (Note)	37K1M (Note)	37K2 (Note)

Note. Make sure that the power running effective torque is 75% or less of 37 kW. Use a DC reactor (MR-DCL37K).

(b) 400 V class

Converter unit	Servo amplifier	Servo motor HA-LFS_		
		1000 r/min	1500 r/min	2000 r/min
MR-HP55KA4	MR-J2S-30KA4/B4	25K14, 30K14	30K1M4	30K24
	MR-J2S-37KA4/B4	37K14	37K1M4	37K24
	MR-J2S-45KA4/B4		45K1M4	45K24
	MR-J2S-55KA4/B4		50K1M4	55K24

(2) MR-J4 series

(a) 200 V class

Converter unit	Drive unit	Servo motor HG-JR_	
		1000 r/min series	1500 r/min series
MR-CR55K	MR-J4-DU30K_	30K1	30K1M
	MR-J4-DU37K_	37K1	37K1M

(b) 400 V class

Converter unit	Drive unit	Servo motor HG-JR_	
		1000 r/min series	1500 r/min series
MR-CR55K4	MR-J4-DU30K_4	30K14	30K1M4
	MR-J4-DU37K_4	37K14	37K1M4
	MR-J4-DU45K_4		45K1M4
	MR-J4-DU55K_4		55K1M4

1.3 Configuration with Peripheral Equipment

(1) MR-J2S series

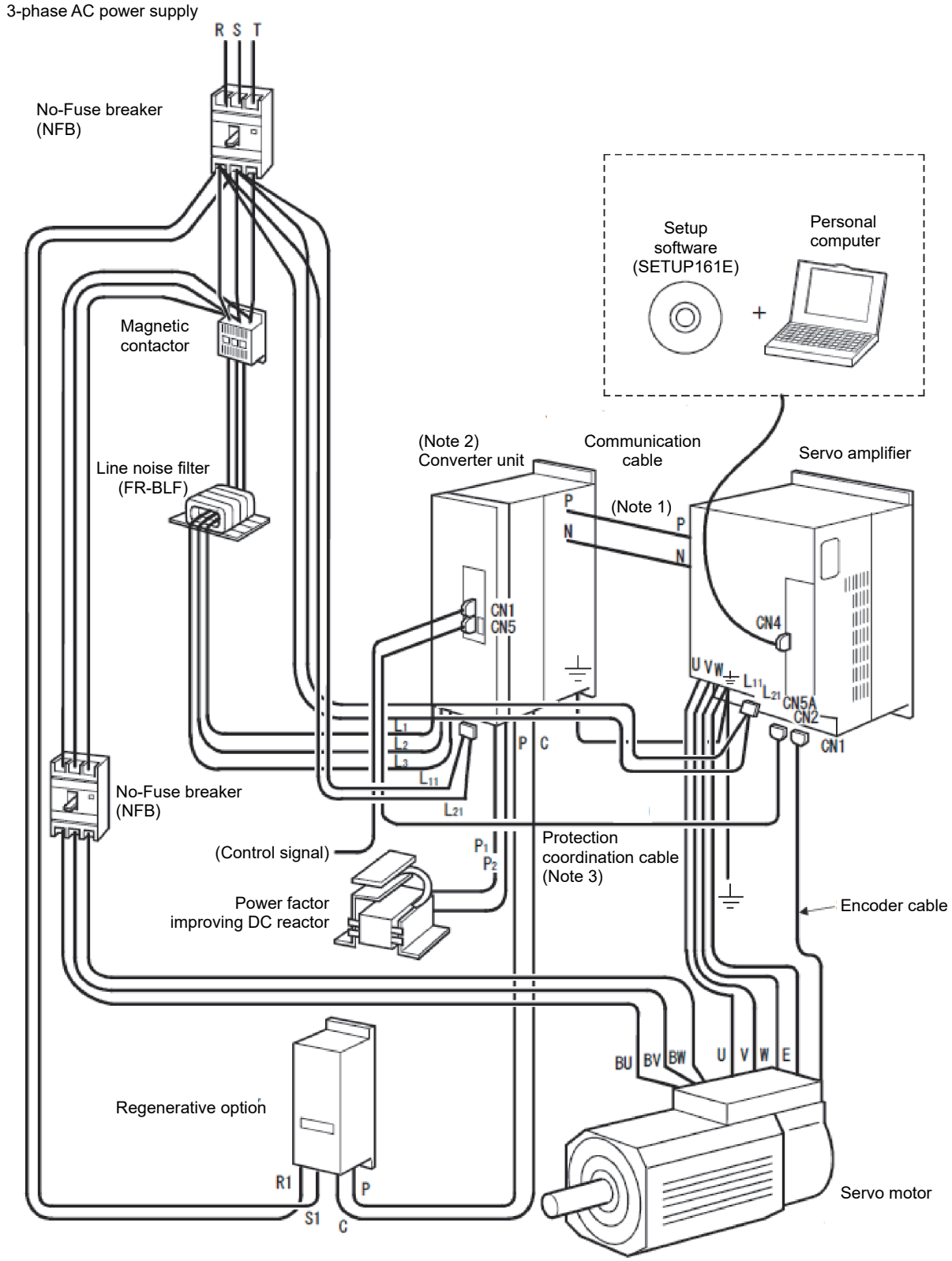

Note 1. P and N conductor bars to connect a converter unit and servo amplifier are standard accessories.
2. This system requires a converter unit.
3. Use an MR-J2HBUS_M_SSCNET cable as the protection coordination cable.

(2) MR-J4-DU_

This diagram shows MR-J4-DU30KB4 and MR-J4-DU37KB4. The way to interface MR-J4-DU_ is the same as MR-J4-_. Refer to each servo amplifier instruction manual.

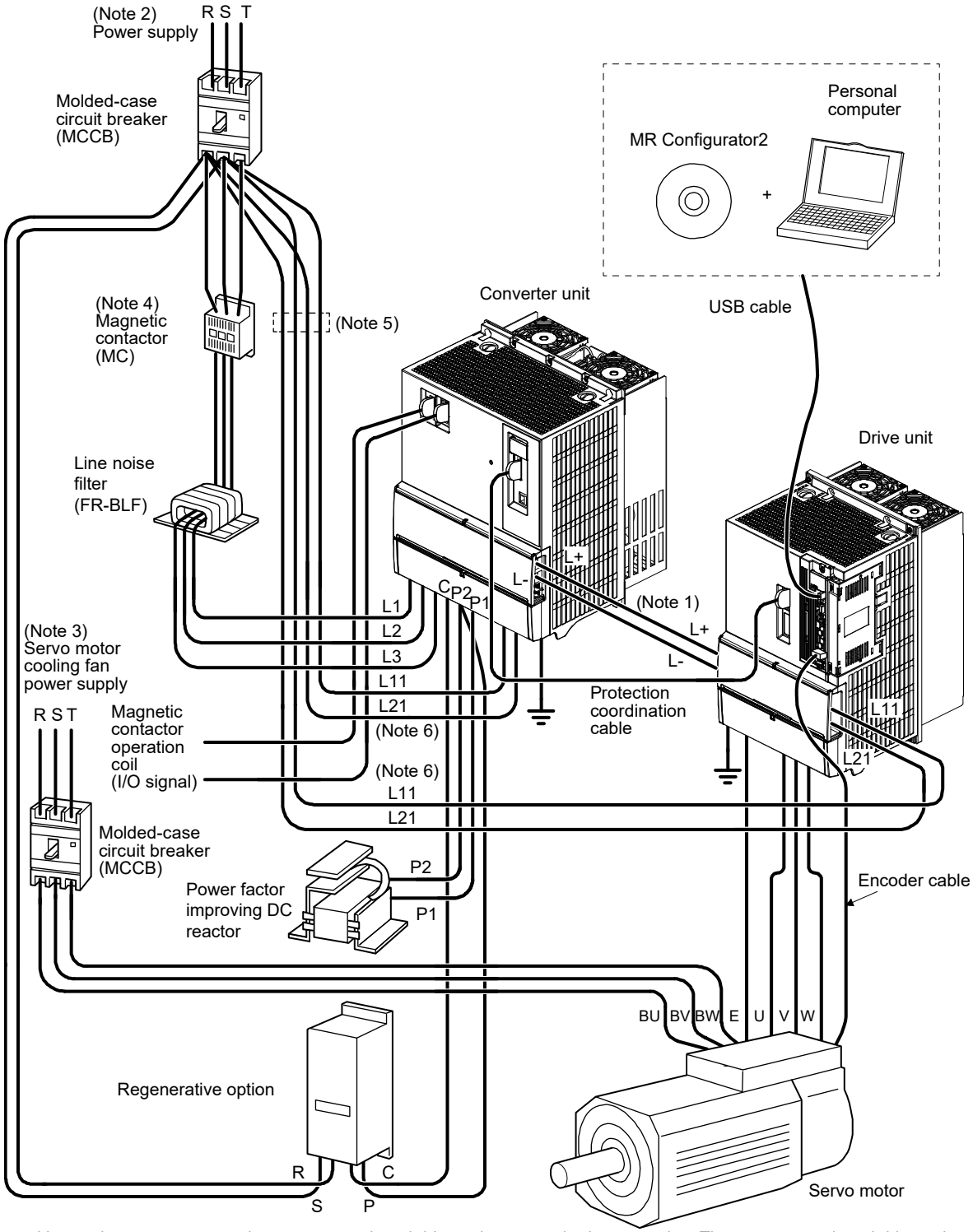

Note 1. L+ and L- conductors to connect the converter unit and drive unit are standard accessories. The converter unit and drive unit are installed more closely together than they are shown in this diagram.
2. For the power supply specifications, refer to Part 7 "Common Reference Material".
3. For the power supply specifications of the cooling fan, refer to the Servo Motor Instruction Manual (Vol. 3).
4. Bus voltage decreases according to the voltage and operation pattern of the main circuit, and there may be a shift in dynamic brake deceleration during forced stop deceleration. If dynamic brake deceleration is not desired, delay the time to turn off the electromagnetic contactor.
5. Install an overcurrent protection device (molded-case circuit breaker, fuse, or others) to protect the branch circuit. (Refer to section 5.3.)
6. The converter unit and the drive unit can be connected to the control circuit power supply (L11/L21) by daisy chain. Refer to section 5.2 for the wire size and the selection of the overcurrent protection device.

1.4 Installation

Mounting direction and distance

⚠Note	●Install the converter unit and servo amplifier accurately and vertically on a perpendicular wall. Otherwise a malfunction may be caused. ●Secure the prescribed distance between the converter unit/servo amplifier and the inner surface of the cabinet or other devices. Otherwise a malfunction may be caused. ●When using equipment that generates heat, such as regenerative options, set up with sufficient consideration of heat generation so that there is no effect on the converter unit/servo amplifier.

(1) MR-J2S series

(a) For single installations

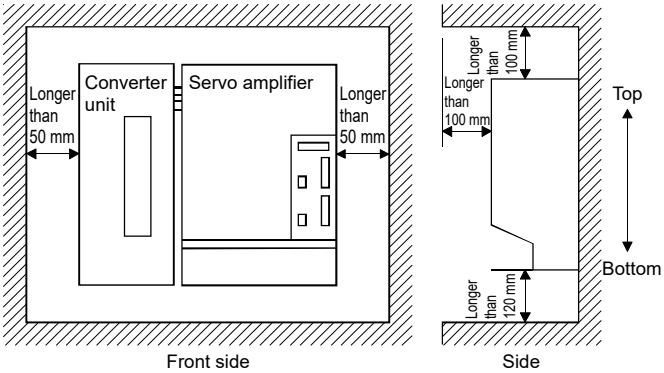

(b) Mounting dimensions

[Unit: mm]

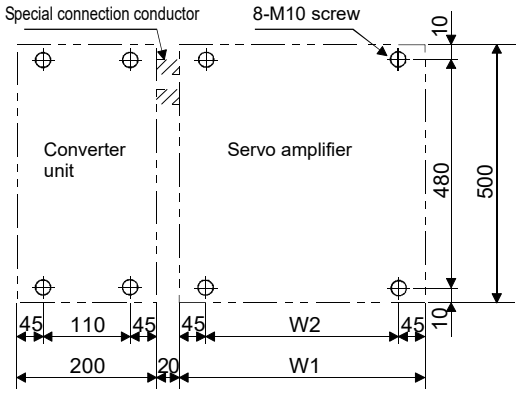

Servo amplifier	Dimensions	
	W1	W2
MR-J2S-30KA4/B4	380	290
MR-J2S-30KA/B, 37KA/B MR-J2S-37KA4/B4, 45KA4/B4, 55KA4/B4	450	360

(2) MR-J4-DU_

(a) Installation

POINT
●Make sure to install a drive unit on the right of a converter unit as shown in the diagram.

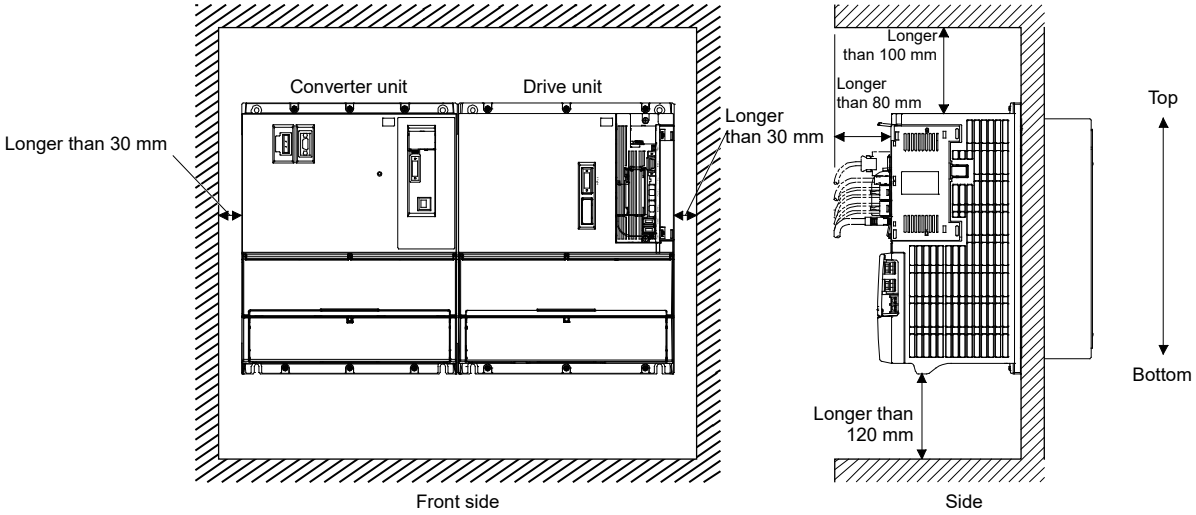

(b) Mounting hole dimensions

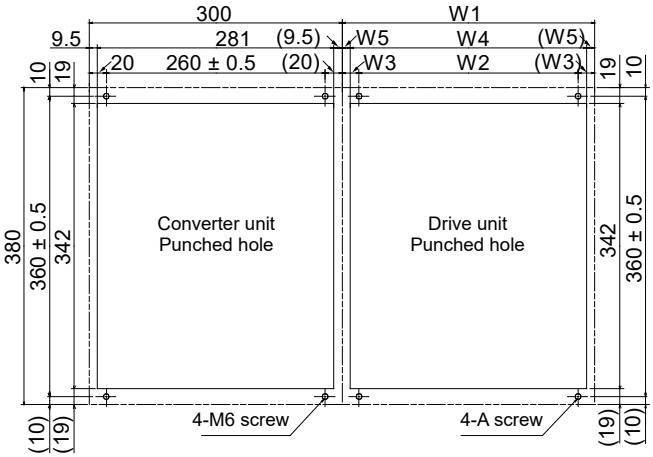

Drive unit	Variable dimensions [mm]					Screw size
	W1	W2	W3	W4	W5	A
MR-J4-DU30K_ MR-J4-DU37K_ MR-J4-DU45K_4 MR-J4-DU55K_4	300	260 ±0.5	20	281	9.5	M6
MR-J4-DU30K_4 MR-J4-DU37K_4	240	120 ±0.5	60	222	9	M5

1.5 Magnetic Contactor Control Connector (CNP1) [Exclusively for MR-J4-DU_]

⚠ Note	●Connect a magnetic contactor wiring connector to the converter unit. CNP1-1 and L11 are always in conduction. Leaving the connector disconnected can cause an electric shock.

POINT
●The J2S series comes with no magnetic contactor control connector.

Enabling the magnetic contactor output shuts off the main circuit power supply automatically when the drive unit activates an alarm.
Setting converter unit parameter [Pr. PA02] to "_ _ _ 1" (the initial value) enables the magnetic contactor output.

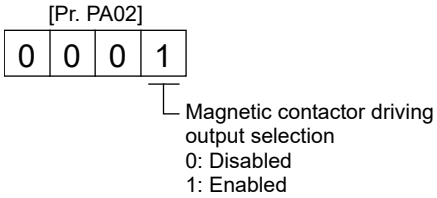

(1) When the magnetic contactor drive output is enabled
Connecting the magnetic contactor control connector (CNP1) to the coil of a magnetic contactor enables the control of the magnetic contactor.

CNP1 connection internal diagram

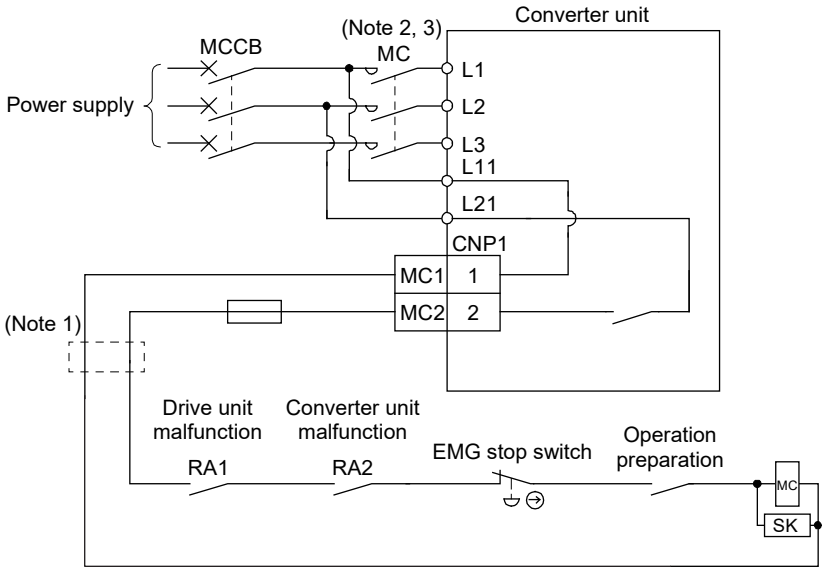

Note 1. Use a step-down transformer when the converter unit and drive unit are 400 V class and the coil voltage of the magnetic contactor is 200 V class.
2. Bus voltage decreases according to the voltage and operation pattern of the main circuit, and there may be a shift in dynamic brake deceleration during forced stop deceleration. If dynamic brake deceleration is not desired, delay the time to turn off the electromagnetic contactor.
3. If instantaneous power failure or any other problem lowers the voltage of L11 or L21, the magnetic contactor turns off.

When the drive unit sends the converter unit a start up command, the converter unit shorts CNP1-2 and L21, powering the control circuit of the magnetic contactor. This turns on the magnetic contactor and powers up the main circuit of the converter unit.
In the following cases, the converter unit releases CNP1-2 and L21 and powers down the main circuit automatically.

(a) When the converter unit activates an alarm.

(b) When the drive unit activates an alarm.

(c) When the forced stop of the converter (EM1) unit is turned off.

(d) When the drive unit outputs [AL. 95 STO warning].

(2) When the magnetic contactor drive output is disabled
Activating an alarm of the converter unit or drive unit does not shut off the main circuit power supply.
Configure the circuit so that an alarm can be detected and the main circuit power supply can be shut off.

2. SIGNALS AND WIRING

2.1 Comparison of Standard Connection Diagrams

⚠WARNING	●Insulate the connections of the power supply terminals. Failure to do so may cause electric shock.

⚠Note	●Always connect a magnetic contactor between the main circuit power supply and L1/L2/L3 of the converter unit in order to configure a power supply shut-off on the power supply side of the converter unit. If a magnetic contactor is not connected, continuous flow of a large current may cause a fire when the converter unit or servo amplifier malfunctions. ●Generate a fault signal and shut off the power supply. Not doing so may cause a fire when a regenerative transistor malfunctions or the like may overheat the regenerative resistor. ●To avoid a malfunction of the servo motor, connect the wires to the correct phase terminals (U/V/W) of the drive unit and the servo motor. ●Do not connect the servo motor directly to the 3-phase 200 V power supply or the 3-phase 400 V power supply. Otherwise a malfunction may be caused. ●Do not switch the motor power cables while currents are applied to the motor. Doing so may cause an abnormal operation or a malfunction.

POINT

●When using an external dynamic brake, refer to the Servo Amplifier Instruction Manual.

(1) General-purpose interface 200 V class

MR-J2S-_KA	MR-J4-DU_A

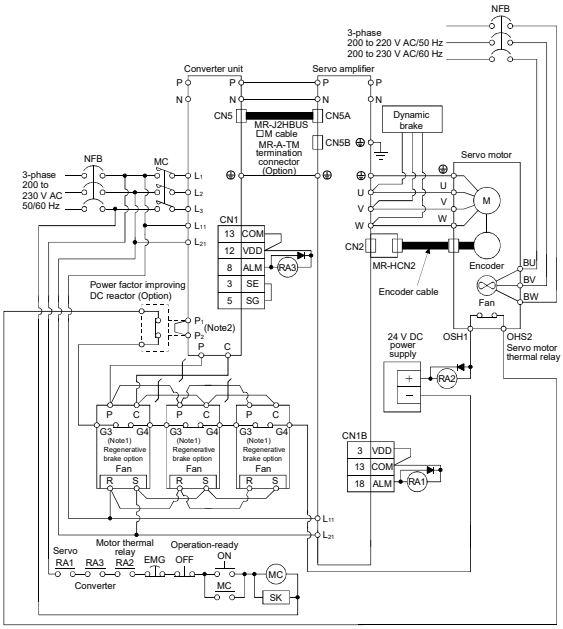

Note 1. This is a configuration for MR-RB137. Use three MR-RB137s in a set, which provides permissible regenerative power of 3900 W.
2. When using a power factor improving DC reactor, remove the short-circuit bar between P1 and P2.
3. Use an MR-J2HBUS_M_ SSCNET cable as a protection coordination cable.
4. Use an external dynamic brake to this servo amplifier. Without an external dynamic brake, the servo motor keeps running in a free run state at an emergency stop, leading to an accident. Take as many safety measures as possible in the system.

When magnetic contactor drive output is enabled (factory setting)

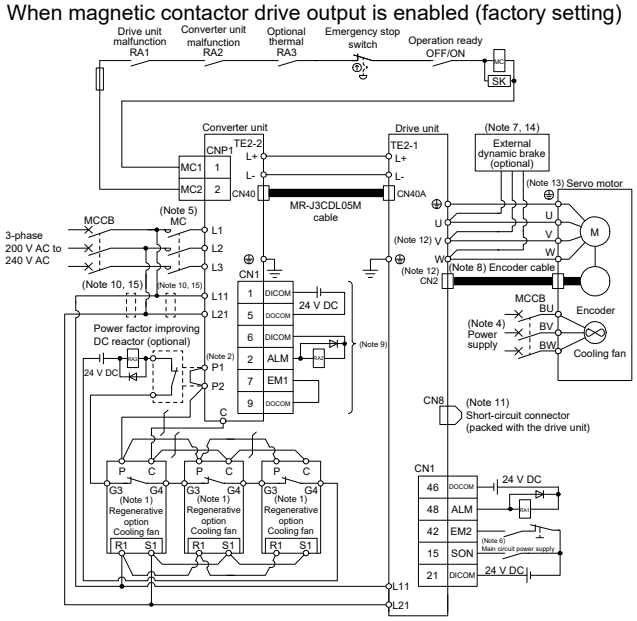

When magnetic contactor drive output is disabled

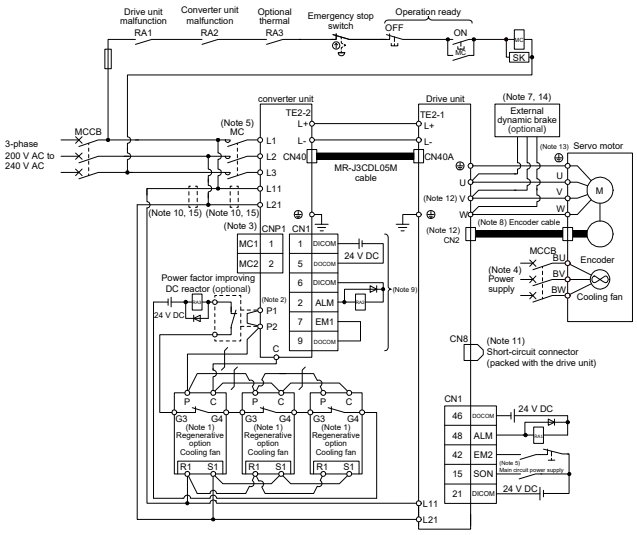

Note 1. This is for MR-RB137. For the MR-RB137, three units are used as one set (permissible regenerative power: 3900 W).
2. P1 and P2 are connected by default. When using the power factor improving DC reactor, connect P1 and P2 after removing the short bar across them.
3. Connect the magnetic contactor wiring connector to CNP1 of the converter unit. If the connector is not connected, an electric shock may occur.
4. For specifications of the cooling fan power supply, refer to "Servo Motor Instruction Manual (Vol. 3)".
5. Use a magnetic contactor with an operation delay time (interval between current being applied to the coil until closure of contacts) of 80 ms or less. The bus voltage decreases depending on the main circuit voltage and operation pattern, which may cause the forced stop deceleration to shift to the dynamic brake deceleration. When dynamic brake deceleration is not required, slow the time to turn off the magnetic contactor.
6. To prevent an unexpected restart of the drive unit, configure a circuit to turn off EM2 in the drive unit when the main circuit power is turned off.
7. Use an external dynamic brake to this drive unit. Without an external dynamic brake, activation of an alarm which does not cause deceleration to a stop keeps the servo motor running in a free run state at an emergency stop, and may lead to an accident. Take as many safety measures as possible. For alarms which do not cause deceleration to a stop and wiring of the external dynamic brake, refer to "MR-CV_/MR-CR55K_/MR-J4-DU_(-RJ) Instruction Manual".
8. For the encoder cable, use of the option cable is recommended. For selecting cables, refer to "Servo Motor Instruction Manual (Vol. 3)".
9. This diagram shows sink I/O interface. For source I/O interface, refer to "MR-CV_/MR-CR55K_/MR-J4-DU_(-RJ) Instruction Manual".
10. Install an overcurrent protection device (molded-case circuit breaker or fuse) to protect the branch circuit. (Refer to section 5.3.)
11. When not using the STO function, attach the short-circuit connector supplied with the drive unit.
12. Do not connect the servo motor of a wrong axis to U, V, W, or CN2 of the drive unit. Otherwise, a malfunction may occur.
13. For connecting servo motor power wires, refer to "Servo Motor Instruction Manual (Vol. 3)".
14. The external dynamic brake cannot be used for compliance with SEMI-F47 standard. Do not assign DB. Failure to do so will cause the drive unit to become servo-off when an instantaneous power failure occurs.。
15. The converter unit and the drive unit can be connected to the control circuit power supply (L11/L21) by daisy chain. Refer to section 5.2 for the wire size and the selection of the overcurrent protection device.

(2) SSCNET interface 200 V class

MR-J2S-_KB	MR-J4-DU_B

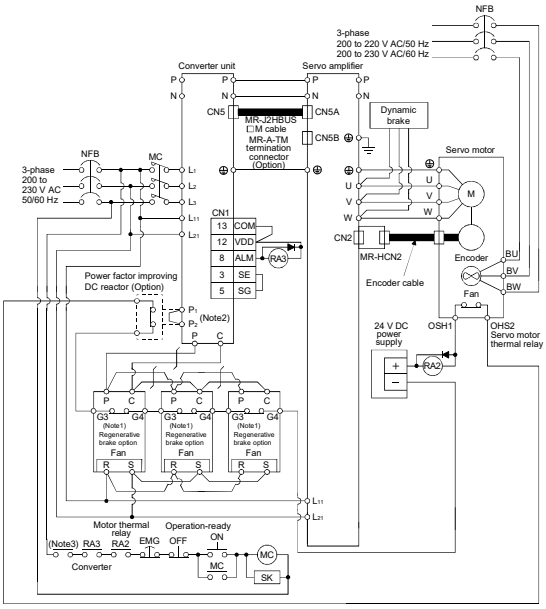

Note 1. This is a configuration for MR-RB137. Use three MR-RB137s in a set, which provides permissible regenerative power of 3900 W.
2. When using a power factor improving DC reactor, remove the short-circuit bar between P1 and P2.
3. Shut off the power supply by using an external sequence when a servo alarm occurs.
4. Use an MR-J2HBUS_M_ SSCNET cable as a protection coordination cable.
5. Use an external dynamic brake to this servo amplifier. Without an external dynamic brake, the servo motor keeps running in a free run state at an emergency stop, leading to an accident. Take as many safety measures as possible.

When magnetic contactor drive output is enabled (factory setting)

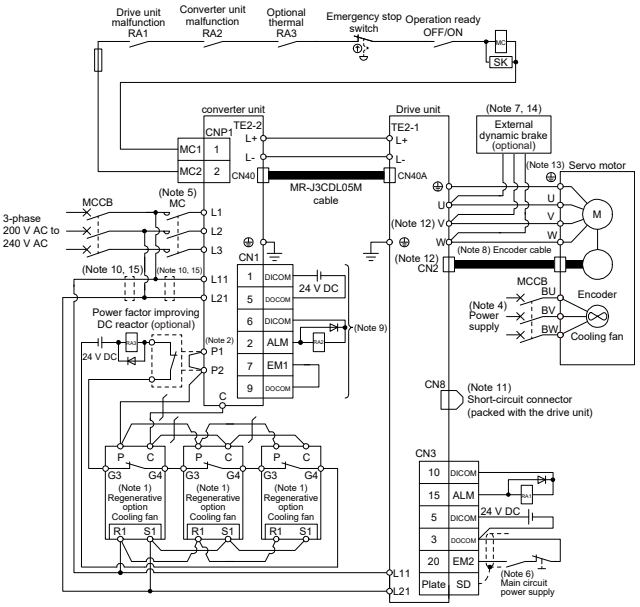

When magnetic contactor drive output is disabled

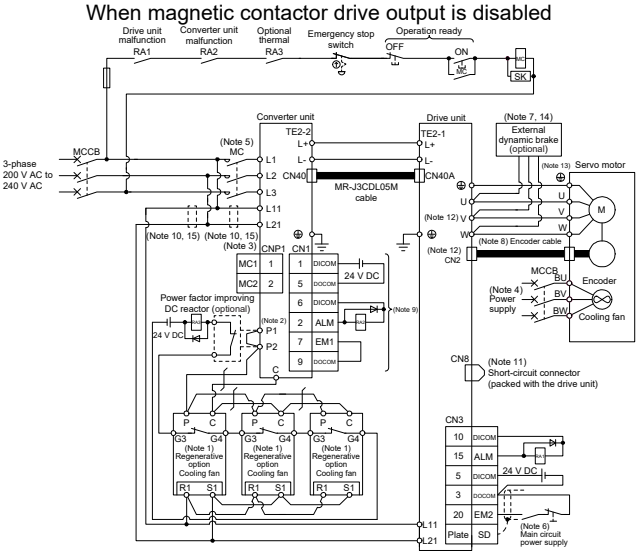

Note 1. This is for MR-RB137. For the MR-RB137, three units are used as one set (permissible regenerative power: 3900 W).
2. P1 and P2 are connected by default. When using the power factor improving DC reactor, connect P1 and P2 after removing the short bar across them.
3. Connect the magnetic contactor wiring connector to CNP1 of the converter unit. If the connector is not connected, an electric shock may occur.
4. For specifications of the cooling fan power supply, refer to "Servo Motor Instruction Manual (Vol. 3)".
5. Use a magnetic contactor with an operation delay time (interval between current being applied to the coil until closure of contacts) of 80 ms or less. The bus voltage decreases depending on the main circuit voltage and operation pattern, which may cause the forced stop deceleration to shift to the dynamic brake deceleration. When dynamic brake deceleration is not required, slow the time to turn off the magnetic contactor.
6. To prevent an unexpected restart of the drive unit, configure a circuit to turn off EM2 in the drive unit when the main circuit power is turned off.
7. Use an external dynamic brake to this drive unit. Without an external dynamic brake, activation of an alarm which does not cause deceleration to a stop keeps the servo motor running in a free run state at an emergency stop, and may lead to an accident. Take as many safety measures as possible. For alarms which do not cause deceleration to a stop and wiring of the external dynamic brake, refer to "MR-CV_/MR-CR55K_/MR-J4-DU_(-RJ) Instruction Manual".
8. For the encoder cable, use of the option cable is recommended. For selecting cables, refer to "Servo Motor Instruction Manual (Vol. 3)".
9. This diagram shows sink I/O interface. For source I/O interface, refer to "MR-CV_/MR-CR55K_/MR-J4-DU_(-RJ) Instruction Manual".
10. Install an overcurrent protection device (molded-case circuit breaker or fuse) to protect the branch circuit. (Refer to section 5.3.)
11. When not using the STO function, attach the short-circuit connector supplied with the drive unit.
12. Do not connect the servo motor of a wrong axis to U, V, W, or CN2 of the drive unit. Otherwise, a malfunction may occur.
13. For connecting servo motor power wires, refer to "Servo Motor Instruction Manual (Vol. 3)".
14. The external dynamic brake cannot be used for compliance with SEMI-F47 standard. Do not assign DB. Failure to do so will cause the drive unit to become servo-off when an instantaneous power failure occurs.。
15. The converter unit and the drive unit can be connected to the control circuit power supply (L11/L21) by daisy chain. Refer to section 5.2 for the wire size and the selection of the overcurrent protection device.

(3) General-purpose interface 400 V class

MR-J2S-_KA4	MR-J4-DU_A4

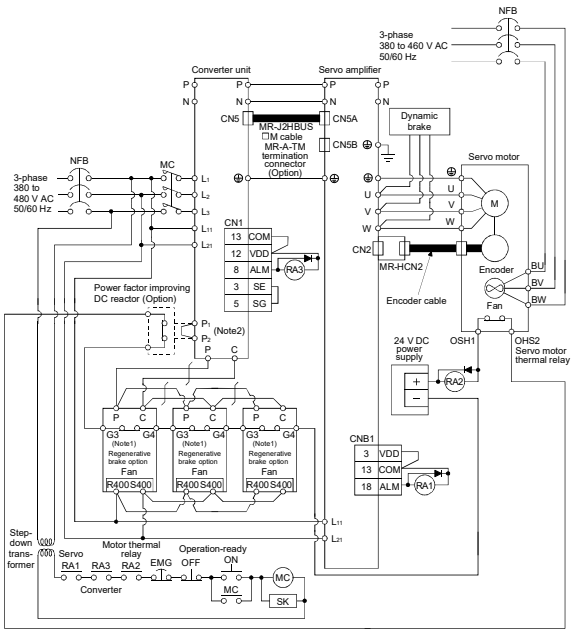

When magnetic contactor drive output is enabled (factory setting)

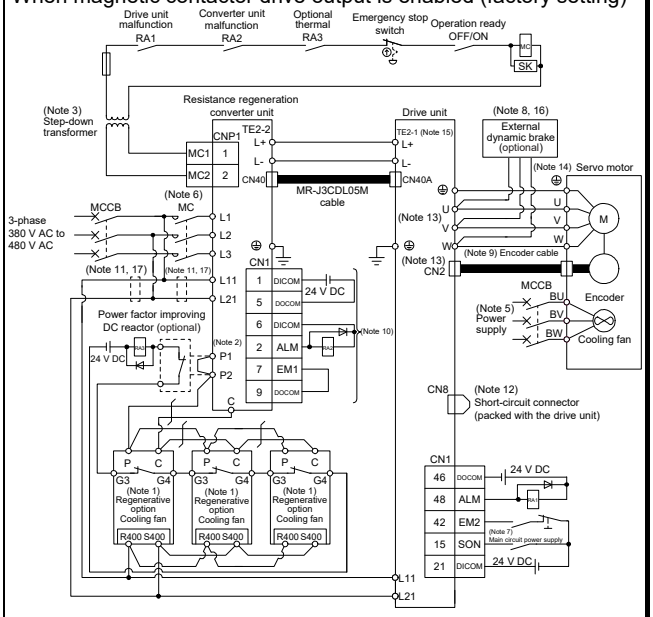

When magnetic contactor drive output is disabled

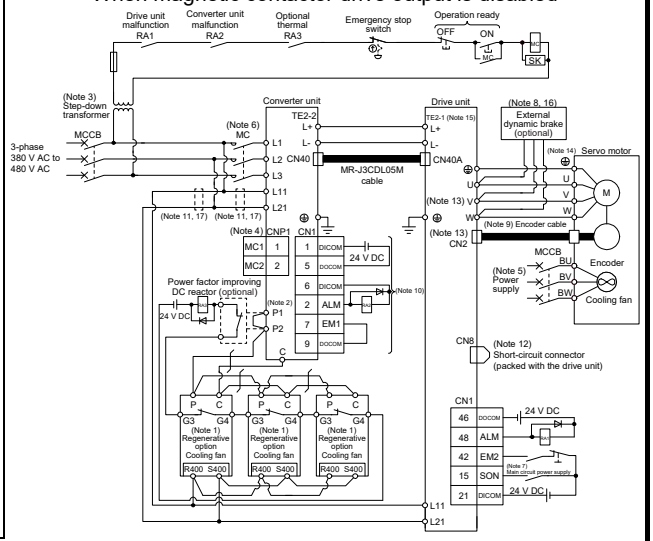

Note
1. This is a configuration for MR-RB138-4. Use three MR-RB138-4s in a set, which provides permissible regenerative power of 3900 W.
2. When using a power factor improving DC reactor, remove the short-circuit bar between P1 and P2.
3. Use a step-down transformer when the coil voltage of the magnetic contactor is 200 V class.
4. Use an MR-J2HBUS_M_ SSCNET cable as a protection coordination cable.
5. Use an external dynamic brake to this servo amplifier. Without an external dynamic brake, the servo motor keeps running at an emergency stop in a free run state, leading to an accident. Take as many safety measures as possible in the system.

Note
1. This is for MR-RB13V-4. For the MR-RB13V-4, three units are used as one set (permissible regenerative power: 3900 W).
2. P1 and P2 are connected by default. When using the power factor improving DC reactor, connect P1 and P2 after removing the short bar across them. Refer to section 8.6 for details.
3. A step-down transformer is required when the coil voltage of the magnetic contactor is 200 V class.
4. Connect the magnetic contactor wiring connector to CNP1 of the converter unit. If the connector is not connected, an electric shock may occur.
5. For specifications of the cooling fan power supply, refer to "Servo Motor Instruction Manual (Vol. 3)".
6. Use a magnetic contactor with an operation delay time (interval between current being applied to the coil until closure of contacts) of 80 ms or less. The bus voltage decreases depending on the main circuit voltage and operation pattern, which may cause the forced stop deceleration to shift to the dynamic brake deceleration. When dynamic brake deceleration is not required, slow the time to turn off the magnetic contactor.
7. To prevent an unexpected restart of the drive unit, configure a circuit to turn off EM2 in the drive unit when the main circuit power is turned off.
8. Use an external dynamic brake for the drive unit. Failure to do so will cause an accident because the servo motor does not stop immediately but coasts at an alarm occurrence for which the servo motor does not decelerate to stop. Ensure the safety in the entire equipment. For alarms for which the servo motor does not decelerate to stop, refer to chapter 6. For wiring of the external dynamic brake, refer to "MR-CV_/MR-CR55K_/MR-J4-DU_(-RJ) Instruction Manual".
9. For the encoder cable, use of the option cable is recommended. For selecting cables, refer to "Servo Motor Instruction Manual (Vol. 3)".
10. This diagram shows sink I/O interface. For source I/O interface, refer to section "MR-CV_/MR-CR55K_/MR-J4-DU_(-RJ) Instruction Manual".
11. Install an overcurrent protection device (molded-case circuit breaker or fuse) to protect the branch circuit. (Refer to section 5.3.)
12. When not using the STO function, attach the short-circuit connector supplied with the drive unit.
13. Do not connect the servo motor of a wrong axis to U, V, W, or CN2 of the drive unit. Otherwise, a malfunction may occur.
14. For connecting servo motor power wires, refer to "Servo Motor Instruction Manual (Vol. 3)".
15. For the MR-J4-DU30K_4(-RJ) and MR-J4-DU37K_4(-RJ), the terminal block is TE2.
16. The external dynamic brake cannot be used for compliance with SEMI-F47 standard. Do not assign DB. Failure to do so will cause the drive unit to become servo-off when an instantaneous power failure occurs.
17. The converter unit and the drive unit can be connected to the control circuit power supply (L11/L21) by daisy chain. Refer to section 5.2 for the wire size and the selection of the overcurrent protection device.

(4) SSCNET interface 400 V class

MR-J2S-_KB4	MR-J4-DU_B4

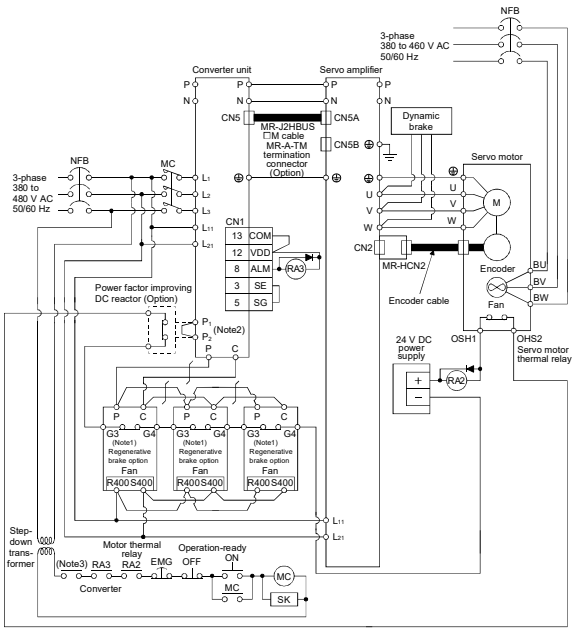

Note 1. For MR-RB138-4. Use three MR-RB138-4s in a set, which provides permissible regenerative power of 3900 W.
2. When using a power factor improving DC reactor, remove the short-circuit bar between P1 and P2.
3. Shut off the power supply by using an external sequence when a servo alarm occurred.
4. Use a step-down transformer when the coil voltage of the magnetic contactor is 200 V class.
5. Use an MR-J2HBUS_M_ SSCNET cable as a protection coordination cable.
6. Use an external dynamic brake to this servo amplifier. Without an external dynamic brake, the servo motor keeps running at an emergency stop in a free run state, leading to an accident. Take as many safety measures as possible in the system.

When magnetic contactor drive output is enabled (factory setting)

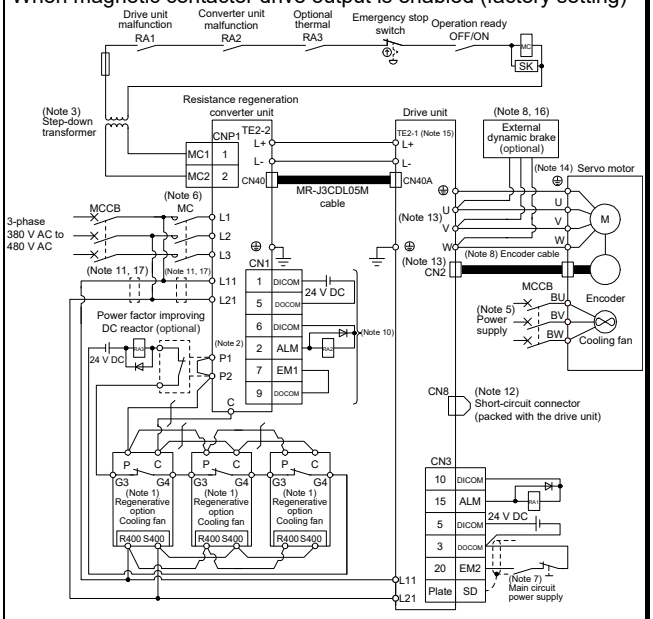

When magnetic contactor drive output is disabled

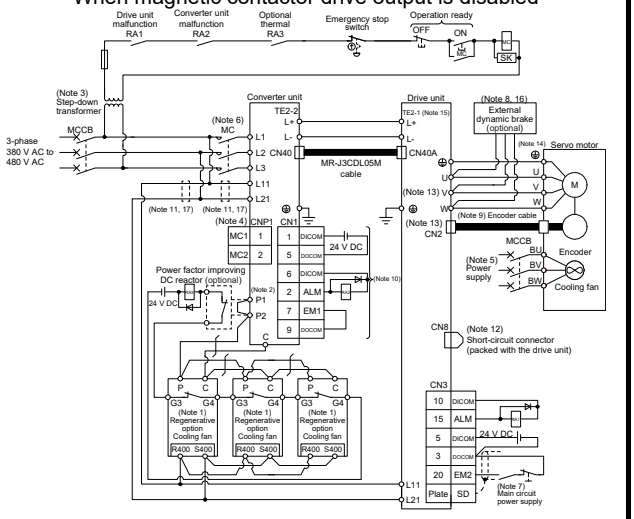

Note 1. This is for MR-RB13V-4. For the MR-RB13V-4, three units are used as one set (permissible regenerative power: 3900 W).
2. P1 and P2 are connected by default. When using the power factor improving DC reactor, connect P1 and P2 after removing the short bar across them. Refer to section 8.6 for details.
3. A step-down transformer is required when the coil voltage of the magnetic contactor is 200 V class.
4. Connect the magnetic contactor wiring connector to CNP1 of the converter unit. If the connector is not connected, an electric shock may occur.
5. For specifications of the cooling fan power supply, refer to "Servo Motor Instruction Manual (Vol. 3)".
6. Use a magnetic contactor with an operation delay time (interval between current being applied to the coil until closure of contacts) of 80 ms or less. The bus voltage decreases depending on the main circuit voltage and operation pattern, which may cause the forced stop deceleration to shift to the dynamic brake deceleration. When dynamic brake deceleration is not required, slow the time to turn off the magnetic contactor.
7. To prevent an unexpected restart of the drive unit, configure a circuit to turn off EM2 in the drive unit when the main circuit power is turned off.
8. Use an external dynamic brake for the drive unit. Failure to do so will cause an accident because the servo motor does not stop immediately but coasts at an alarm occurrence for which the servo motor does not decelerate to stop. Ensure the safety in the entire equipment. For alarms for which the servo motor does not decelerate to stop, refer to chapter 6. For wiring of the external dynamic brake, refer to "MR-CV_/MR-CR55K_/MR-J4-DU_(-RJ) Instruction Manual".
9. For the encoder cable, use of the option cable is recommended. For selecting cables, refer to "Servo Motor Instruction Manual (Vol. 3)".
10. This diagram shows sink I/O interface. For source I/O interface, refer to section "MR-CV_/MR-CR55K_/MR-J4-DU_(-RJ) Instruction Manual".
11. Install an overcurrent protection device (molded-case circuit breaker or fuse) to protect the branch circuit. (Refer to section 5.3.)
12. When not using the STO function, attach the short-circuit connector supplied with the drive unit.
13. Do not connect the servo motor of a wrong axis to U, V, W, or CN2 of the drive unit. Otherwise, a malfunction may occur.
14. For connecting servo motor power wires, refer to "Servo Motor Instruction Manual (Vol. 3)".
15. For the MR-J4-DU30K_4(-RJ) and MR-J4-DU37K_4(-RJ), the terminal block is TE2.
16. The external dynamic brake cannot be used for compliance with SEMI-F47 standard. Do not assign DB. Failure to do so will cause the drive unit to become servo-off when an instantaneous power failure occurs.
17. The converter unit and the drive unit can be connected to the control circuit power supply (L11/L21) by daisy chain. Refer to section 5.2 for the wire size and the selection of the overcurrent protection device.

2.2 Power-on Sequence

(1) MR-J2S-30 kW or more

(a) Power-on sequence

1) For the power supply wiring, make sure to use a magnetic contactor in the main circuit power supply as shown in Section 2.1.
Configure so that the magnetic contactor is turned off at the same time as an alarm is generated in the external sequence.

2) Turn on the control circuit power supply L11/L21 at the same time as or before turning on the main circuit power supply.
If the main circuit power supply is not turned on, a warning is displayed on the display. However, the warning disappears and operation returns to normal when the main circuit power supply is turned on.

3) The servo amplifier can receive SON (servo-on) signals approximately 1 s after the main circuit power supply is turned on. Therefore, if SON (servo-on) is turned on at the same time as the 3-phase power supply, the base circuit will be turned on after approximately 1 s. After approximately 20 ms, RD (Ready) is turned on and operation becomes available.

(2) MR-J4-DU_A_

(a) Power-on procedure

1) For the power supply wiring, make sure to use a magnetic contactor (L1/L2/L3) in the main circuit power supply as shown in Section 2.1.
Configure so that the magnetic contactor is turned off at the same time as an alarm is generated in the external sequence.

2) When the magnetic contactor drive output of the converter unit is enabled, turn on simultaneously the control circuit power supply (L11/L12) of the converter unit and that of the drive unit. The main circuit power supply is turned on automatically after the converter unit and drive unit start up. When an external sequence controls the magnetic contactor, turn on the control circuit power supply (L11/L12) of the converter unit and that of the drive unit at the same time as or before turning on the main circuit power supply. If the main circuit power supply is not turned on, a warning is displayed on the drive unit display. However, the warning disappears and operation returns to normal when the main circuit power supply is turned on.

(b) Timing chart

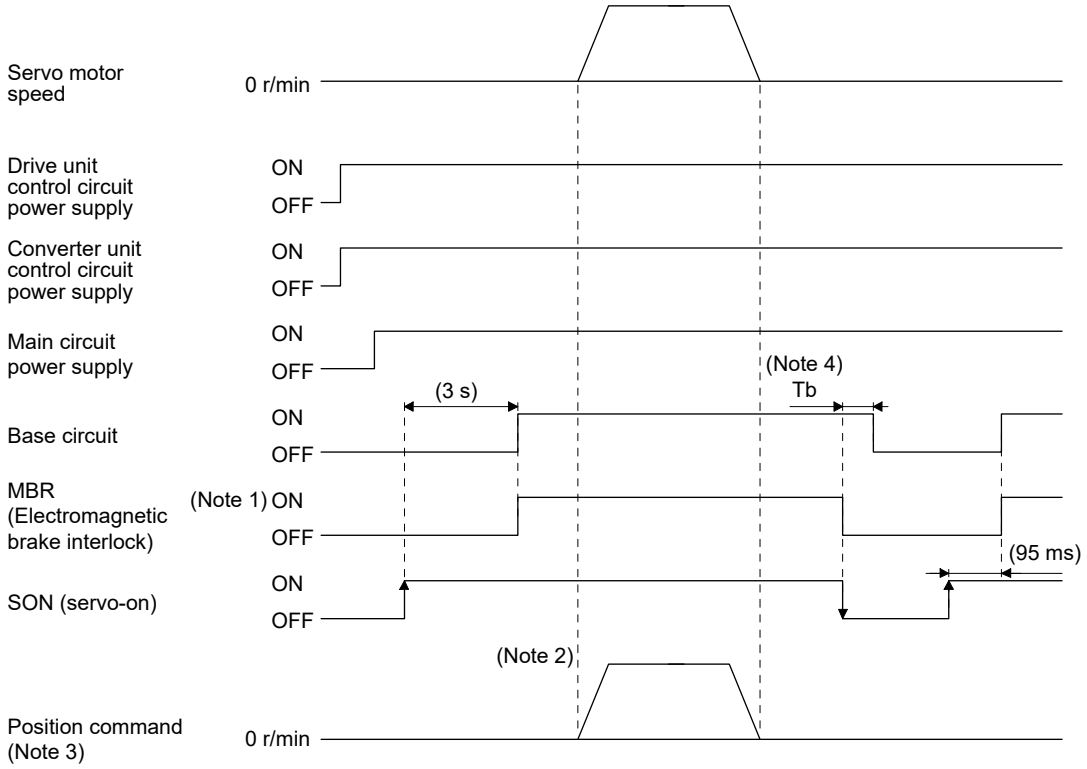

Note 1. When setting up an electromagnetic brake at customer's side, make up a sequence which will operate the electromagnetic brake as follow using MBR (Electromagnetic brake interlock).
ON: Electromagnetic brake is not activated.
OFF: Electromagnetic brake is activated.

2. Give a position command after the external electromagnetic brake is released.

3. This is in position control mode.

4. In [Pr. PC16 Electromagnetic brake sequence output], set a delay time (Tb) from MBR (Electromagnetic brake interlock) off to base circuit shut-off at a servo-off.

(3) MR-J4-DU_B_

(a) Power-on procedure

1) For the power supply wiring, make sure to use a magnetic contactor (L1/L2/L3) in the main circuit power supply as shown in Section 2.1.
Configure the circuit so that the magnetic contactor is turned off at the same time as an alarm is generated in the external sequence.

2) Turn on the control circuit power supply (L11/L12) of the converter unit and that of the drive unit at the same time as or before turning on the main circuit power supply. If the main circuit power supply is not turned on, a warning is displayed on the drive unit display. However, the warning disappears and operation returns to normal when the main circuit power supply is turned on.

(b) Timing chart

1) If the magnetic contactor driving output is enabled and the ready-on is on, turning SON off does not shut off the main circuit power supply.

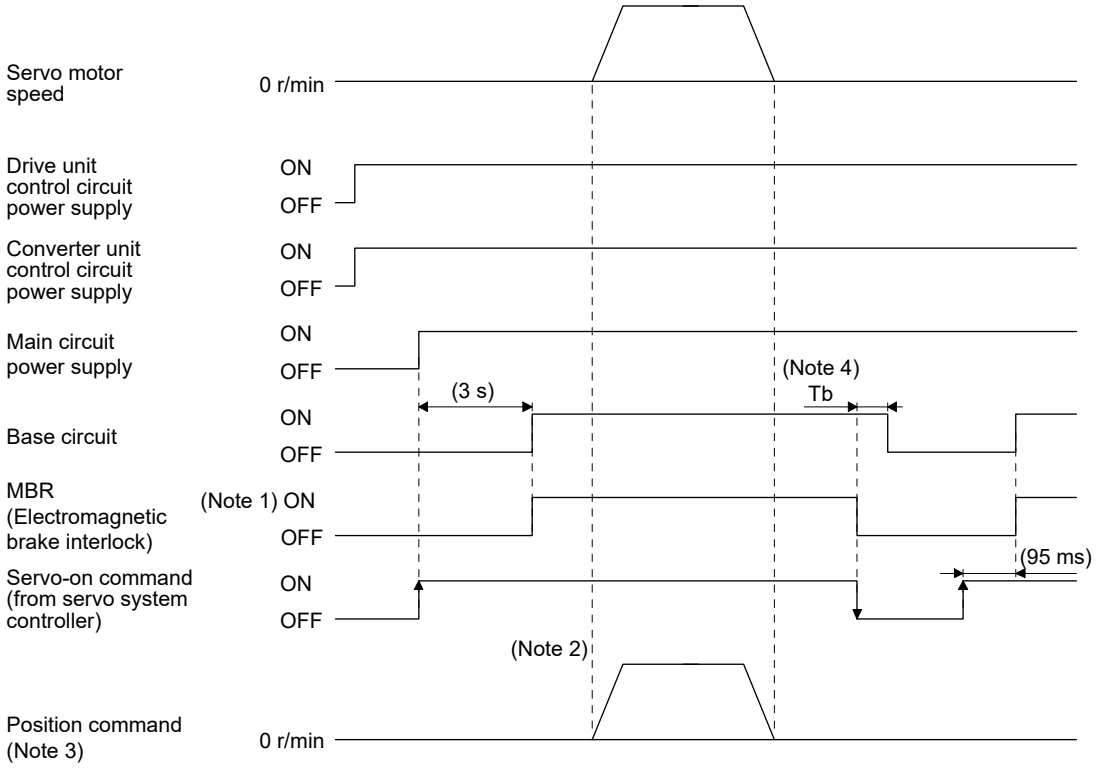

Note 1. When setting up an electromagnetic brake at customer's side, make up a sequence which will operate the electromagnetic brake as follow using MBR (Electromagnetic brake interlock).
ON: Electromagnetic brake is not activated.
OFF: Electromagnetic brake is activated.

2. Give a position command after the external electromagnetic brake is released.

3. This is in position control mode.

4. In [Pr. PC02 Electromagnetic brake sequence output], set a delay time (Tb) from MBR (Electromagnetic brake interlock) off to base circuit shut-off at a servo-off.

2) When the magnetic contactor driving output is enabled and the ready-on is turned off
Turning off the ready-on switches off the magnetic contactor of the convertor unit and shuts off the main circuit power supply.

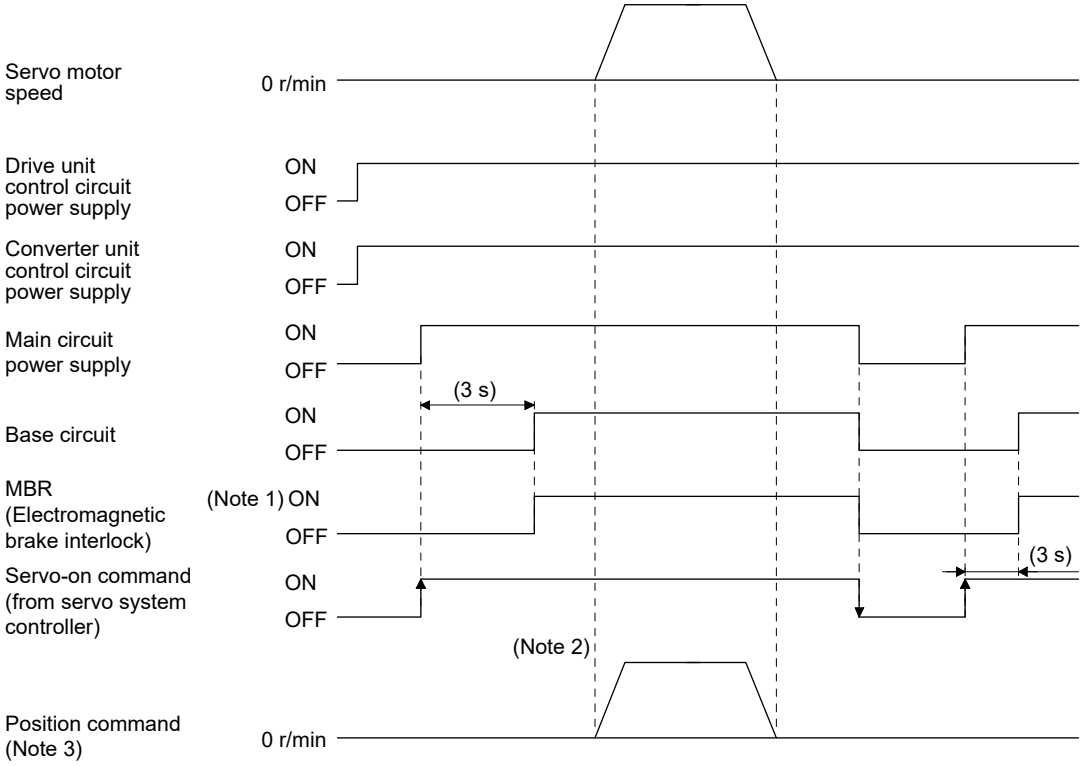

Note 1. When setting up an electromagnetic brake at customer's side, make up a sequence which will operate the electromagnetic brake as follow using MBR (Electromagnetic brake interlock).
ON: Electromagnetic brake is not activated.
OFF: Electromagnetic brake is activated.
2. Give a position command after the external electromagnetic brake is released.
3. This is in position control mode.

3) When the magnetic contactor driving output is off
When an alarm occurs, turn off the magnetic contactor by using the external sequence and shut off the main circuit power supply.

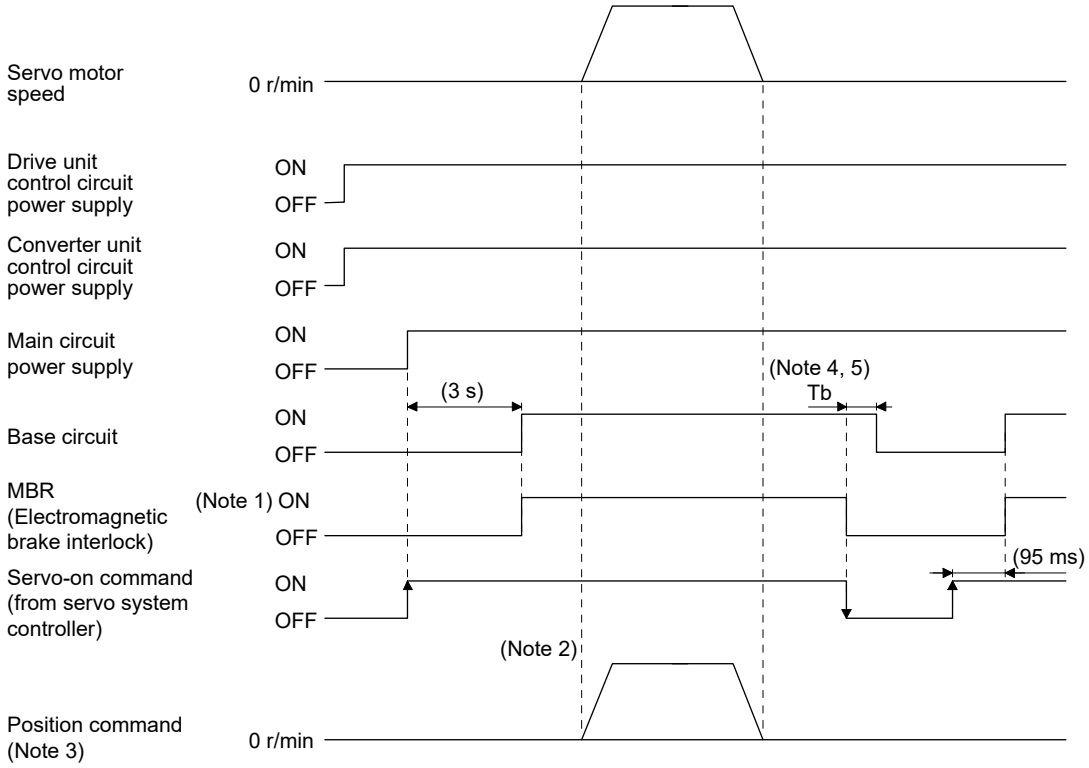

Note 1. When setting up an electromagnetic brake at customer's side, make up a sequence which will operate the electromagnetic brake as follow using MBR (Electromagnetic brake interlock).
ON: Electromagnetic brake is not activated.
OFF: Electromagnetic brake is activated.
2. Give a position command after the external electromagnetic brake is released.
3. This is in position control mode.
4. In [Pr. PC02 Electromagnetic brake sequence output], set a delay time (Tb) from MBR (Electromagnetic brake interlock) off to base circuit shut-off at a servo-off.
5. The base circuit remains ready-on status at servo-off. When the status is ready-off, the base circuit and the servo-on command turn off at the same time. (Tb = 0)

2.3 List of Corresponding Connectors and Terminal Blocks

(1) Converter unit

(a) Connector comparison table

For the details of signals, refer to each servo amplifier instruction manual.

MR-HP30K, MR-HP55KA4	MR-CR55K, MR-CR55K4
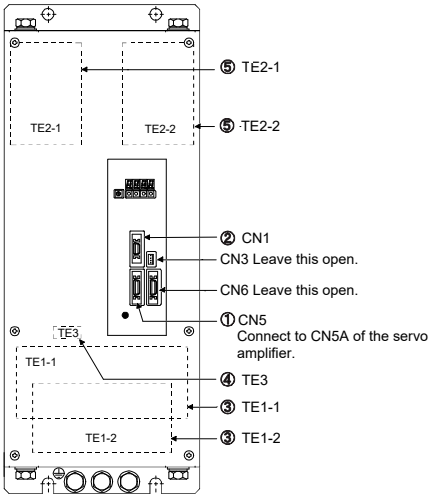	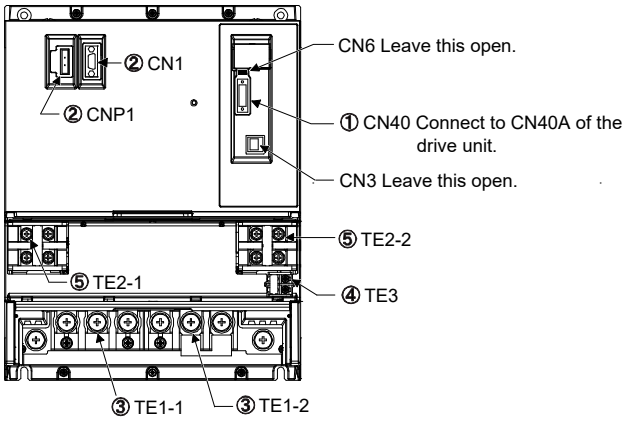

CN1

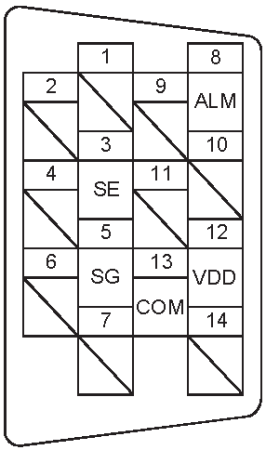

Connector pin No.	Signal symbol
CN1-1	-
CN1-2	-
CN1-3	SE
CN1-4	-
CN1-5	SG
CN1-6	-
CN1-7	-
CN1-8	ALM
CN1-9	-
CN1-10	-
CN1-11	-
CN1-12	VDD
CN1-13	COM
CN1-14	-

CN1

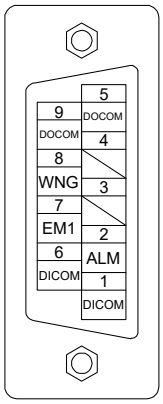

Connector pin No.	Signal symbol
CN1-1	DICOM
CN1-2	ALM
CN1-3	-
CN1-4	-
CN1-5	DOCOM
CN1-6	DICOM
CN1-7	EM1
CN1-8	WNG
CN1-9	DOCOM

CNP1

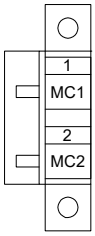

Connector pin No.	Signal symbol
CNP1-1	MC1
CNP1-2	MC2

(b) List of Corresponding Connectors and Terminal Blocks

	MR-HP30K, MR-HP55KA4		MR-CR55K, MR-CR55K4	Note
①	Drive unit connector [CN5]	→	Protection coordination connector [CN40]	Must switch to a protection coordination cable (option) or prepare a new cable.
②	I/O signal connector [CN1]		I/O signal connector [CN1]	Must fabricate a new cable.
			Magnetic contactor control connector [CNP1]	Must fabricate a new cable.
③	Main circuit terminal block [TE1-1] [TE1-2]		Main circuit terminal block [TE1-1] [TE1-2]	Note
④	Control circuit terminal block [TE3]		Control circuit terminal block [TE3]	
⑤	PN terminal block [TE2-1] [TE2-2]		PN terminal block [TE2-1] [TE2-2]	

Note. The configuration of the main circuit terminal block differs depending on the capacity. Refer to "Part 7: Common Reference Material".

(2) Drive unit (General-purpose interface)

(a) Connector comparison table

For the details of signals, refer to each servo amplifier instruction manual.

MR-J2S-_KA_	MR-J4-DU_A_
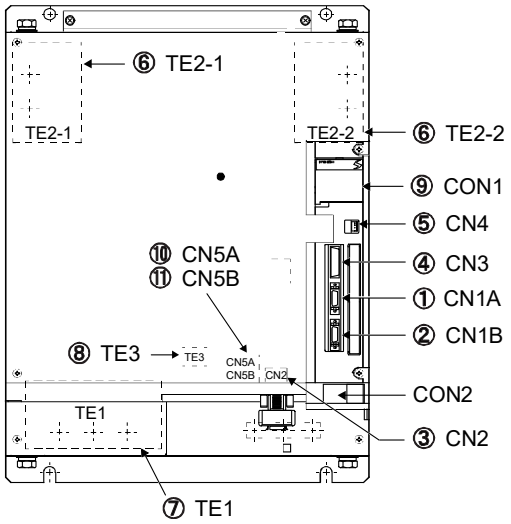	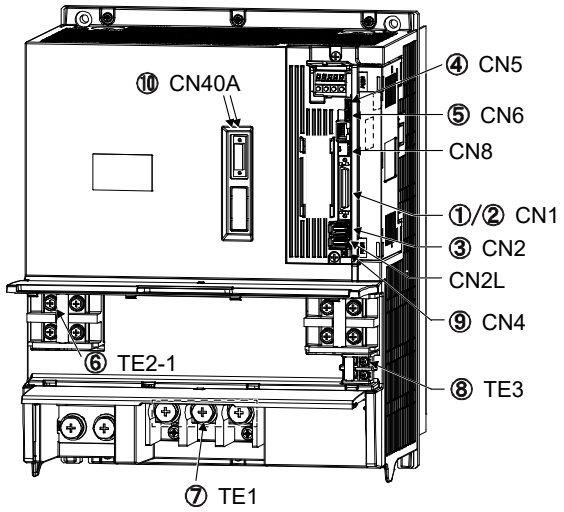

(b) List of Corresponding Connectors and Terminal Blocks

	MR-J2S-_A_		MR-J4-DU_A_	Note
①	I/O signal connector [CN1A]	→	I/O signal connector [CN1]	Prepare a new cable.
②	I/O signal connector [CN1B]			
③	Encoder connector [CN2]		Encoder connector [CN2]	Must switch to encoder cable (option) or prepare a new cable.
④	Communication connector [CN3]		USB communication connector [CN5]	Switch to USB cable (option).
⑤	Analog monitor [CN4]		Analog monitor connector [CN6]	Switch to monitor cable (option).
⑥	PN terminal block [TE2-1] [TE2-2]		L+/L- terminal [TE2-1]	Note
⑦	Servo motor power supply terminal block [TE1]		Servo motor power output terminal [TE1]	
⑧	Control circuit terminal block [TE3]		Control circuit terminal L11/L21 [TE3]	
⑨	Battery connector [CON1]		Battery connector [CN4]	Prepare a new battery.
⑩	Converter unit connectors [CN5A]		Protection coordination connector [CN40A]	Must switch to a protection coordination cable (option) or prepare a new cable.
⑪	Terminal connector connector [CN5B]			

Note. The configuration of the main circuit terminal block differs depending on the capacity. Refer to "Part 7: Common Reference Material".

When not using the STO function in MR-J4-_A_, attach the short-circuit connector supplied with the servo amplifier to CN8 (STO input signal connector).

(c) Comparison of signals

1) CN1A/CN1B

Refer to Section 3.4 of "Part 2: Replacement of MR-J2S-_A_ with MR-J4-_A_".

2) CN3

MR-J2S-_A_		Signal abbreviation (Note)	MR-J4-_A_	
Connector pin assignment	Connector pin No.		Connector pin No.	Connector pin assignment
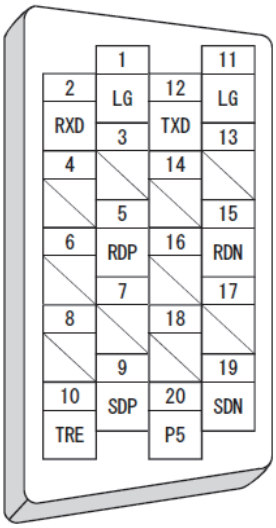	CN3-1	LG	CN3-1	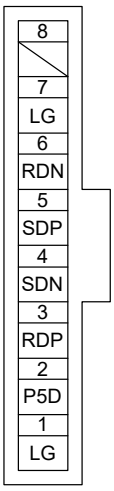
	CN3-5	RDP	CN3-3	
	CN3-9	SDP	CN3-5	
	CN3-11	LG	CN3-7	
	CN3-15	RDN	CN3-6	
	CN3-19	SDN	CN3-4	
	CN3-20	P5(P5D)	CN3-2	
	CN3-2	RXD	-	
	CN3-10	TRE	-	
	CN3-12	TXD	-	

Note. Signal abbreviations in parentheses are for MR-J4-_A_.

3) CN4

MR-J2S-_A_		Signal symbol	MR-J4-_A_	
Connector pin assignment	Connector pin No.		Connector pin No.	Connector pin assignment
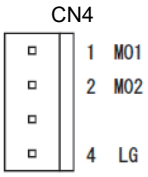	CN4-1	MO1	CN6-3	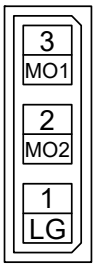
	CN4-2	MO2	CN6-2	
	CN4-4	LG	CN6-1	

(3) Drive unit (SSCNET interface)

(a) Connector comparison table

For the details of signals, refer to each servo amplifier instruction manual.

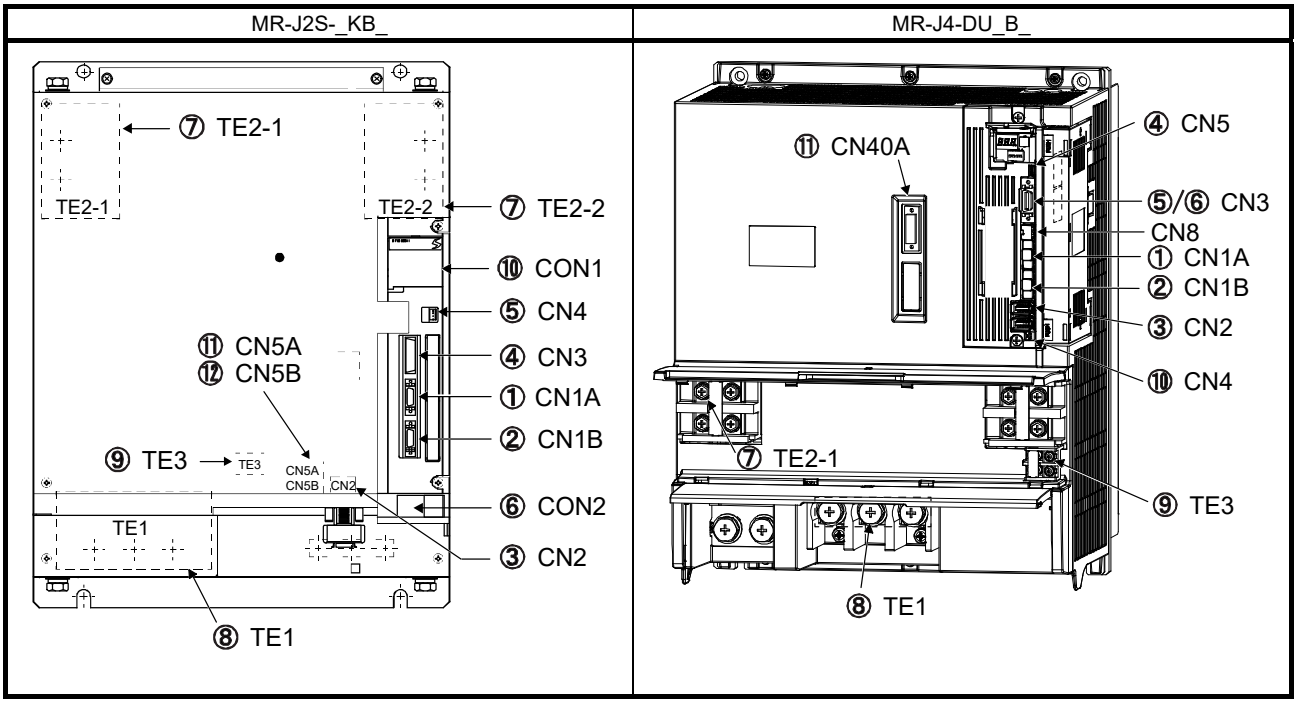

(b) List of Corresponding Connectors and Terminal Blocks

	MR-J2S-_B_		MR-J4-DU_B_	Note
①	SSCNET cable connector [CN1A]		SSCNET III cable connector [CN1A]	Prepare a new cable.
②	SSCNET cable connector [CN1B]		SSCNET III cable connector [CN1B]	
③	Encoder connector [CN2]		Encoder connector [CN2]	Must switch to encoder cable (option) or prepare a new cable.
④	Communication connector [CN3]		USB communication connector [CN5]	Switch to USB cable (option).
⑤	Analog monitor [CN4]		I/O signal connector [CN3]	Prepare a new cable.
⑥	I/O signal connector [CON2]			
⑦	PN terminal block [TE2-1] [TE2-2]	→	L+/L- terminal [TE2-1]	Note
⑧	Servo motor power supply terminal block [TE1]		Servo motor power output terminal [TE1]	
⑨	Control circuit terminal block [TE3]		Control circuit terminal L11/L21 [TE3]	
⑩	Battery connector [CON1]		Battery connector [CN4]	Prepare a new battery.
⑪	Converter unit connectors [CN5A]		Protection coordination connector [CN40A]	Must switch to a protection coordination cable (option) or prepare a new cable.
⑫	Terminal connector connector [CN5B]			

Note The configuration of the main circuit terminal block differs depending on the capacity. Refer to "Part 7: Common Reference Material".

When not using the STO function in MR-J4-_B_, mount the short-circuit connector supplied with the servo amplifier to CN8 (STO input signal connector).

(c) Comparison of signals

MR-J2S-_B_		Abbreviation	MR-J4-_B_	
Connector pin assignment	Connector pin No.	(Note 3)	Connector pin No.	Connector pin assignment
CON2 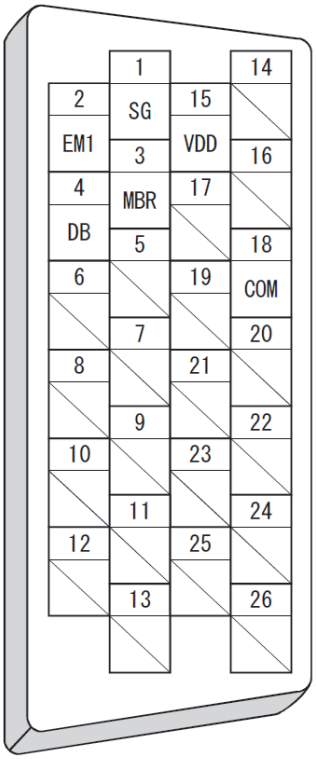	CON2-1	SG (DOCOM)	CN3-3	
	CON2-2	EM1 (EM2)	CN3-20 (Note 1)	
	CON2-3	MBR	CN3-13	
	CON2-4	DB	(Note 2)	
	CON2-15	VDD		CN3 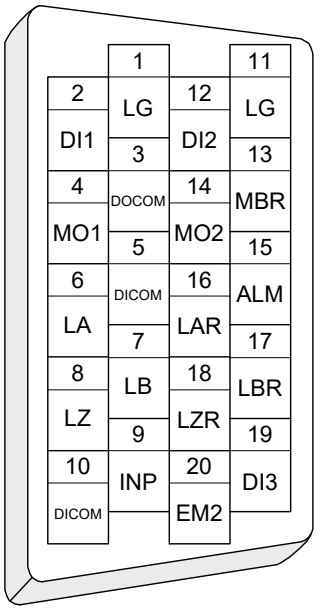
	CON2-18	COM (DICOM)	CN3-5 CN3-10	
CN3 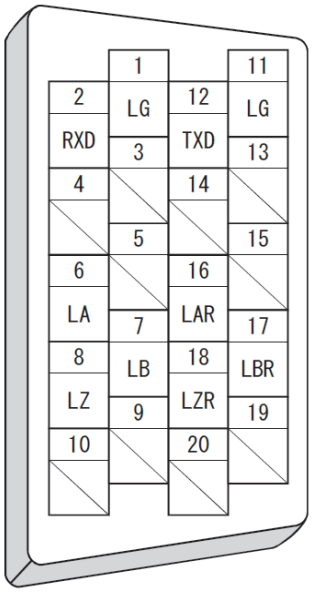	CN3-6 CN3-16	LA LAR	CN3-6 CN3-16	
	CN3-7 CN3-17	LB LBR	CN3-7 CN3-17	
	CN3-8 CN3-18	LZ LZR	CN3-8 CN3-18	
	CN4-1	MO1	CN3-4	
	CN4-2	MO2	CN3-14	
CN4 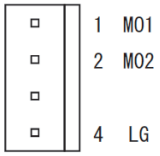	CN4-4	LG	CN3-1 CN3-11	
	Plate	SD	Plate	

Note 1. The factory setting for MR-J4-_B_ is EM2.
2. Set with [Pr. PD07] to [Pr. PD09] for use.
3. Signals unique to MR-J4-_B_ are in parentheses.

3. PARAMETERS

3.1 Comparison of Parameters

⚠ Note	●Never perform extreme adjustments and changes to the parameters, otherwise the operation may become unstable. ●If fixed values are written in the digits of a parameter, do not change these values. ●Do not change parameters for manufacturer setting. ●Do not enter any setting value other than those specified for each parameter.

POINT

●For the parameter converter function, refer to "Part 7: Common Reference Material".
●To enable a parameter whose abbreviation is preceded by *, turn the power OFF and then ON after setting the parameter.
●For details about parameter settings for replacement, refer to the MR-J4-_A_/MR-J4-_B_ Servo Amplifier Instruction Manual.
●With the drive unit, the deceleration to a stop function is enabled in the factory setting. To disable the deceleration to a stop function, set [Pr. PA04] to "0 _ _ _".

(1) Converter unit

(a) Parameter comparison list

POINT

●Manufacturer setting parameters are not described here.

MR-HP30K,MR-HP55KA4					MR-CR55K,MR-CR55K4				
No.	Abbreviation	Parameter name	Initial value	Customer setting value	No.	Abbreviation	Parameter name	Initial value	Customer setting value
0	*STY	Control mode and regenerative option selection	0000h		PA01	*REG	Regenerative options	0000h	
					PA02	*MCC	Magnetic contactor drive output selection	0001h	
4	*DMD	Status display selection	0000h		PA08	*DMD	Status display selection	0000h	
					PA15	AOP3	Function selection A-3	0000h	
5	*ACL	Alarm history clear	0000h		PA09	*BPS	Alarm history clear	0000h	
					PA12	*DIF	Input filter setting	0002h	
					PA17	*AOP5	Function selection A-5	0001h	
					PA18	CVAT	Voltage sag detection time for SEMI-F47	200	

(b) Comparison of parameter details

MR-HP30K,MR-HP55KA4			MR-CR55K,MR-CR55K4		
No.	Name and function	Initial value	No.	Name and function	Initial value
0	Control mode and regenerative option selection Used to select a control mode and a regenerative option. 0 0 0 _ Selection of regenerative option 0: Not used 1: MR-RB136-4 2: MR-RB138-4(3 units) } Only for MR-HP55KA4 3: MR-RB139 4: MR-RB137(3 units) } Only for MR-HP30KA Setting values "1" and "2" are only for MR-HP55KA4, while "3" and "4" are only for MR-HP30KA. Incorrect setting will cause a parameter error (AL.37).	0000h	PA01	Regenerative options Select a regenerative option. Set correctly otherwise [AL. 37 Parameter error] will occur. 0 0 0 _ Regenerative option selection 00: Do not use regenerative options When using a brake unit FR-BU2-(H), select this value. 01: MR-RB139 02: MR-RB137 (3 units) 13: MR-RB137-4 14: MR-RB13V-4 (3 units)	0000h

MR-HP30K,MR-HP55KA4			MR-CR55K,MR-CR55K4		
No.	Name and function	Initial value	No.	Name and function	Initial value
			PA02	Magnetic contactor drive output selection 0 0 0 □ └ Magnetic contactor driving output selection Select magnetic contactor driving output. 0: Disabled 1: Enabled	0001h
4	Status display selection Used to select a status display shown at power-on. 0 0 0 □ └ Status display of the converter unit at power-on 0: Bus voltage(initial value) 1: Effective load ratio 2: Peak load ratio 3: Regenerative load ratio	0000h	PA08	Status display selection Used to select a status display shown at power-on. 0 0 0 □ └ Status display shown at power-on 0: Status 1: Bus voltage 2: Effective load ratio 3: Peak load ratio 4: Regenerative load ratio 5: Unit power consumption 1 6: Unit integrating power consumption 1 7: Unit integrating power consumption 2	0000h
			PA15	Function selection A-3 0 0 0 □ └ Unit power consumption unit selection 0: 1 kW unit 1: 0.1 kW unit	0000h
5	Alarm history clear Used to set the alarm history clear. 0 0 0 □ └ Alarm history clear 0: Disabled 1: Enabled When alarm history clear is enabled, the alarm history is cleared at next power-on. After the alarm history is cleared, the setting is automatically disabled (0).	0000h	PA09	Alarm history clear Used to erase the alarm history. 0 0 0 □ └ Alarm history clear 0: Disabled 1: Enabled Selecting "Enabled" will erase the alarm history at the next power-on. It will be automatically disabled after the alarm history is erased.	0000h
			PA12	Input filter setting 0 0 0 □ └ Select an input filter. If an external input signal causes chattering due to noise, etc., the input filter is used to suppress it. 0: None 1: 1.777 [ms] 2: 3.555 [ms] 3: 5.333 [ms]	0002h
			PA17	Function selection A-5 (Note) 0 0 □ □ └ Detection method selection for [AL. 10 Undervoltage]: Set when [AL. 10 Undervoltage] occurs due to power supply voltage distortion. 0: When [AL. 10] does not occur 1: When [AL. 10] occurs └ SEMI-F47 function selection 0: Disabled 1: Enabled By selecting "1" in this digit, even when an instantaneous power failure occurs during the operation, the electrical energy charged in the capacitor can be used to avoid the occurrence of [AL.10 Undervoltage]. [Voltage sag detection time for Pr. PA18 SEMIF47] can be used to set the waiting time before [AL. 10 Undervoltage] occurs.	0001h
			PA18	SEMI-F47 function: voltage sag detection wait (Note) Used to set the waiting time before activating [AL. 10 Undervoltage]. Selecting "disabled (__0_)" for "SEMI-F47 function selection" of [Pr. PA17] also disables this parameter. Setting range: 30 to 200	200 [ms]

Note. Set [Pr. PA17 SEMI-F47 function selection] and [Pr. PA18 SEMI-F47 function Voltage sag detection wait] of the converter unit according to [Pr. PA20 SEMI-F47 function selection] and [Pr. PF25 SEMI-F47 function Voltage sag detection wait] of a drive unit.

(2) Drive unit

> POINT
>
> ●Manufacturer setting parameters are not described here.

(a) General-purpose interface 200 V class

Here are described settings of drive unit specific parameters. Settings of the other parameters are the same as MR-J4-_A_. Refer to Chapter 5 of "MR-J4-_A_(-RJ) Servo Amplifier Instruction Manual".

MR-J2S_A			MR-J4_A		
No.	Name and function	Initial value	No.	Name and function	Initial value
0	Control mode and regenerative option selection 0 0 0 _ Refer to the MR-J2S-_A_ servo amplifier Instruction Manual. Make sure to select regenerative option selection “0”.	0000h	PA02	Regenerative options Select a regenerative option. For a drive unit, select a regenerative option by configuring the converter unit. Select "_ _ 0 0" or "_ _ 0 1", otherwise [AL. 37 Parameter error] will occur. 00: Use no regenerative option, or use a regenerative option by configuring the converter unit.	0000h

(b) SSCNET interface 200 V class

> POINT
>
> ●Connecting to a servo system controller results in servo parameters of the controller written to the corresponding parameters of the drive unit.
>
> ●Some servo system controller models, drive unit software versions, and MR Configurator2 software versions limit setting of some parameters or setting values of the parameters. For details, refer to servo system controller user's manuals.

Here are described settings of drive unit specific parameters. Settings of the other parameters are the same as MR-J4-_B_. Refer to Chapter 5 of "MR-J4-_B_(-RJ) Servo Amplifier Instruction Manual".

MR-J2S_B			MR-J4_B		
No.	Name and function	Initial value	No.	Name and function	Initial value
2	Regenerative resistor 0 _ 0 0 Regenerative option selection Make sure to set “00”. Refer to the MR-J2S-_B_ servo amplifier Instruction Manual.	0000h	PA02	Regenerative options Select a regenerative option. For a drive unit, select a regenerative option by configuring the converter unit. Select "_ _ 0 0" or "_ _ 0 1", otherwise [AL. 37 Parameter error] will occur. 00: Use no regenerative option, or use a regenerative option by configuring the converter unit.	0000h

(c) General-purpose interface 400 V class

Here are described settings of drive unit specific parameters. Settings of the other parameters are the same as MR-J4-_A_. Refer to Chapter 5 of "MR-J4-_A_(-RJ) Servo Amplifier Instruction Manual".

<table>
<tr><th colspan="3">MR-J2S-_A4</th><th colspan="3">MR-J4-_A4</th></tr>
<tr><th>No.</th><th>Name and function</th><th>Initial value</th><th>No.</th><th>Name and function</th><th>Initial value</th></tr>
<tr><td>0</td><td>Control mode and regenerative option selection
0 0 0 ☐
Refer to the MR-J2S-_A_ servo amplifier Instruction Manual.
Regenerative option selection
Make sure to set “0”.</td><td>0000h</td><td>PA02</td><td>Regenerative options
Select a regenerative option.
For a drive unit, select a regenerative option by configuring the converter unit.
Select "_ _ 0 0" or "_ _ 0 1", otherwise [AL. 37 Parameter error] will occur.

00: Use no regenerative option, or use a regenerative option by configuring the converter unit.</td><td>0000h</td></tr>
<tr><td>17</td><td>Analog monitor output
0 ☐ 0 ☐
<table><tr><th>Setting value</th><th>Analog monitor 2 (MO2)</th><th>Analog monitor 1 (MO1)</th></tr><tr><td>0</td><td colspan="2">Servo motor speed (±8 V/max. speed)</td></tr><tr><td>1</td><td colspan="2">Torque (±8/max. torque)</td></tr><tr><td>2</td><td colspan="2">Servo motor speed (±8 V/max. speed)</td></tr><tr><td>3</td><td colspan="2">Torque (±8/max. torque)</td></tr><tr><td>4</td><td colspan="2">Current command (±8 V/max. current command)</td></tr><tr><td>5</td><td colspan="2">Speed command (±8/max. speed)</td></tr><tr><td>6</td><td colspan="2">Droop pulse (±10 V/128 pulse)</td></tr><tr><td>7</td><td colspan="2">Droop pulse (±10 V/2048 pulse)</td></tr><tr><td>8</td><td colspan="2">Droop pulse (±10 V/8192 pulse)</td></tr><tr><td>9</td><td colspan="2">Droop pulse (±10 V/32768 pulse)</td></tr><tr><td>A</td><td colspan="2">Droop pulse (±10 V/131072 pulse)</td></tr><tr><td>B</td><td colspan="2">Bus voltage (+8 V/800 V)</td></tr></table></td><td>0100h</td><td>PC14</td><td>Analog monitor output
<table><tr><th>PC14/PC15</th><th>Display definition</th></tr><tr><td>0000</td><td>Servo motor speed
(±8 V/max. speed) (Note 1)</td></tr><tr><td>0001</td><td>Torque
(±8 V/max. torque) (Note 1)</td></tr><tr><td>0002</td><td>Servo motor speed
(±8 V/max. speed) (Note 1)</td></tr><tr><td>0003</td><td>Torque
(+8 V/max. torque) (Note 1)</td></tr><tr><td>0004</td><td>Current command
(±8 V/max. current command)</td></tr><tr><td>0005</td><td>Command pulse frequency
(±10 V/4 Mpulses/s) (Note 2)</td></tr><tr><td>0006</td><td>Servo motor-side droop pulses
(±10 V/100 pulses) (Note 2)</td></tr><tr><td>0007</td><td>Servo motor-side droop pulses
(±10 V/1000 pulses) (Note 2)</td></tr><tr><td>0008</td><td>Servo motor-side droop pulses
(±10 V/10000 pulses) (Note 2)</td></tr><tr><td>0008 or 0009</td><td>(Note 2, 3)</td></tr><tr><td>0009</td><td>Servo motor-side droop pulses
(±10 V/100000 pulses) (Note 2)</td></tr><tr><td>000D</td><td>Bus voltage (+8 V/400 V)</td></tr></table></td><td>0000h

0001h</td></tr>
</table>

Note 1. "Maximum speed" and " Maximum torque" differ depending on the servo motor. Therefore, after the existing motor has been replaced with an HG motor, the output voltage for "Maximum speed" or " Maximum torque" may differ.

2. Units used for MR-J2S-_A_ are different from those for MR-J4-_A_. Note that the input range of existing equipment needs to be adjusted.

3. Set "0008" or "0009". When setting the value, note that the input range of existing equipment needs to be adjusted.

(d) SSCNET interface 400 V class

POINT

- Connecting to a servo system controller writes servo parameters of the controller into the corresponding parameters of the drive unit.
- There are some servo system controller models, drive unit software versions, or MR Configurator2 software versions which limit setting of some parameters or setting values of the parameters. For details, refer to servo system controller user's manuals.

Here are described settings of drive unit specific parameters. Settings of the other parameters are the same as MR-J4-_B_. Refer to Chapter 5 of "MR-J4-_B_(-RJ) Servo Amplifier Instruction Manual".

<table>
<tr><th colspan="3">MR-J2S-_B4</th><th colspan="3">MR-J4-_B4</th></tr>
<tr><th>No.</th><th>Name and function</th><th>Initial value</th><th>No.</th><th>Name and function</th><th>Initial value</th></tr>
<tr><td>2</td><td>Regenerative resistor
0 _ 0 0
Regenerative option selection
Make sure to set “00”.
Refer to the MR-J2S-_B_ servo amplifier Instruction Manual.</td><td>0000h</td><td>PA02</td><td>Regenerative options
Select a regenerative option.
For a drive unit, select a regenerative option by configuring the converter unit.
Select "_ _ 0 0" or "_ _ 0 1", otherwise [AL. 37 Parameter error] will occur.
00: Use no regenerative option, or use a regenerative option by configuring the converter unit.</td><td>0000h</td></tr>
<tr><td rowspan="2">22</td><td rowspan="2">Analog monitor output
0 _ 0 _
<table><tr><th>Setting value</th><th>Analog monitor 2 (MO2)</th><th>Analog monitor 1 (MO1)</th></tr><tr><td>0</td><td colspan="2">Servo motor speed (±8 V/max. speed)</td></tr><tr><td>1</td><td colspan="2">Torque (±8/max. torque)</td></tr><tr><td>2</td><td colspan="2">Servo motor speed (±8 V/max. speed)</td></tr><tr><td>3</td><td colspan="2">Torque (±8/max. torque)</td></tr><tr><td>4</td><td colspan="2">Current command (±8/max. current command)</td></tr><tr><td>5</td><td colspan="2">Speed command (±8 V/max. speed)</td></tr><tr><td>6</td><td colspan="2">Droop pulse (±10 V/128 pulse)</td></tr><tr><td>7</td><td colspan="2">Droop pulse (±10 V/2048 pulse)</td></tr><tr><td>8</td><td colspan="2">Droop pulse (±10 V/8192 pulse)</td></tr><tr><td>9</td><td colspan="2">Droop pulse (±10 V/32768 pulse)</td></tr><tr><td>A</td><td colspan="2">Droop pulse (±10 V/131072 pulse)</td></tr><tr><td>B</td><td colspan="2">Bus voltage (+8 V/800 V)</td></tr></table></td><td rowspan="2">0001h</td><td>PC09</td><td>Analog monitor 1 output
Used to select an output signal to the Analog monitor 1 (MO1).
<table><tr><th>Setting digit</th><th>Explanation</th><th>Initial value</th></tr><tr><td>_ _ X X</td><td>Analog monitor 1 output selection
For details, refer to the following table.</td><td>00h</td></tr><tr><td>_ X _ _</td><td rowspan="2">For manufacturer setting</td><td>0h</td></tr><tr><td>X _ _ _</td><td>0h</td></tr></table>
Analog monitor setting value
<table><tr><th>Setting value</th><th>Item</th><th>Operation Mode (Note 1)
Stan dard</th></tr><tr><td>00</td><td>Servo motor speed (±8 V/max. rotational speed)</td><td>○</td></tr><tr><td>01</td><td>Torque (±8 V/max. torque)</td><td>○</td></tr><tr><td>02</td><td>Servo motor speed (+8 V/max. rotational speed)</td><td>○</td></tr><tr><td>03</td><td>Torque (+8 V/max. torque)</td><td>○</td></tr><tr><td>04</td><td>Current command (±8 V/max. current command)</td><td>○</td></tr><tr><td>05</td><td>Speed command (±8 V/max. rotational speed)</td><td>○</td></tr><tr><td>06</td><td>Servo motor-side droop pulses (±10 V/100 pulses) (Note. 2)</td><td>○</td></tr><tr><td>07</td><td>Servo motor-side droop pulses (±10 V/1000 pulses) (Note. 2)</td><td>○</td></tr><tr><td>08</td><td>Servo motor-side droop pulses (±10 V/10000 pulses) (Note. 2)</td><td>○</td></tr><tr><td>09</td><td>Servo motor-side droop pulses (±10 V/100000 pulses) (Note. 2)</td><td>○</td></tr><tr><td>0A</td><td>Feedback position (±10 V/1 Mpulse) (Note 2)</td><td>○</td></tr><tr><td>0B</td><td>Feedback position (±10 V/10 Mpulses) (Note 2)</td><td>○</td></tr><tr><td>0C</td><td>Feedback position (±10 V/100 Mpulses) (Note 2)</td><td>○</td></tr><tr><td>0D</td><td>Bus voltage (+8 V/400 V, 200 V class)</td><td>○</td></tr><tr><td>0E</td><td>Speed command 2 (±8V/max. rotational speed or max. speed)</td><td>○</td></tr><tr><td>17</td><td>Encoder inside temperature (±10 V/±128 °C)</td><td>○</td></tr></table>
Note 1. Setting values with ○ are available for each mode.
Standard: Use a rotary servo motor in the standard (semi closed loop system) mode.
2. Encoder pulse units.</td><td>0000h</td></tr>
<tr><td>PC10</td><td>0001h</td></tr>
</table>

4. CHARACTERISTICS

4.1 Capacity of Power Source Facility and Generation Loss

(1) Calorific values of converter units and drive units

Table 5.1 and Table 5.2 shows heat losses at rated load and power supply capacity for a set of a converter unit and drive unit. When a servo motor runs at a speed less than its rated speed, its power supply capacity becomes less than a value in the table while its calorific value remains the same.
Since the servo motor requires 2 times to 2.5 times greater instantaneous power for acceleration, use the power supply which ensures that the voltage lies within the permissible voltage fluctuation at the main circuit power supply terminals (L1/L2/L3) of the converter unit. The power supply equipment capacity changes with the power supply impedance.
The actually generated heat falls within the ranges at rated output and at servo-off according to the frequencies of use during operation. When designing an enclosed cabinet, use the values in the table, considering the worst operating conditions. The calorific values in Table 5.1 and Table 5.2 do not include those at regeneration.

(a) MR-J2S series

Table 5.1 Power supply capacities and calorific values per axis at rated output for MR-J2S series

Servo amplifier	Converter unit	Power supply capacity [kVA]		The calorific value of a servo amplifier [W] (Note)		Required heat dissipation area [m²]
		Power factor improving DC reactor not used	Power factor improving DC reactor used	At rated output	At zero torque	
MR-J2S-30KA/B	MR-HP30KA	48	40	1650 (1100 + 550)	60 (30 + 30)	24.1
MR-J2S-37KA/B		59	49	1850 (1300 + 550)	60 (30 + 30)	30.6
MR-J2S-30KA4/B4	MR-HP55KA4	48	40	1290 (1010 + 280)	60 (30 + 30)	24.1
MR-J2S-37KA4/B4		59	49	1650 (1310 + 342)	60 (30 + 30)	30.6
MR-J2S-45KA4/B4		71	59	1810 (1370 + 440)	60 (30 + 30)	33.5
MR-J2S-55KA4/B4		87	72	2190 (1690 + 500)	60 (30 + 30)	40.5

Note. A term on the left in () is for a servo amplifier and one on the right is for a converter unit.

(b) MR-J4-DU_

Table 5.2 Power supply capacities and calorific values at rated output for power regeneration converter unit

Converter unit	Drive unit	Servo motor	Power supply capacity [kVA]		The calorific value of a drive unit [W] (Note)			Required heat dissipation area [m²]
			Power factor improving DC reactor not used	Power factor improving DC reactor used	At rated output	At rated output [Internal heat generation at external cooling]	Servo off	
MR-CR55K	MR-J4-DU30K_	HG-JR30K1 HG-JR30K1M	48	40	1350 (900 + 450)	470	60 (30 + 30)	31.0
	MR-J4-DU37K_	HG-JR37K1 HG-JR37K1M	59	49	1550 (1000 + 550)	550		36.6
MR-CR55K4	MR-J4-DU30K_4	HG-JR30K14 HG-JR30K1M4	48	40	1070 (790 + 280)	390		25.8
	MR-J4-DU37K_4	HG-JR37K14 HG-JR37K1M4	59	49	1252 (910 + 342)	470		30.8
	MR-J4-DU45K_4	HG-JR45K1M4	71	59	1580 (1110 + 470)	550		42.4
	MR-J4-DU55K_4	HG-JR55K1M4	87	72	1940 (1440 + 500)	650		43.0

Note. A term on the left in () is for a drive unit and one on the right is for a converter unit.

4.2 Inrush Current When Turning On the Main Circuit/Control Circuit Power Supply

POINT
●Inrush current values are changeable depending on the frequency of turning on/off the power supplies and ambient temperature.

An inrush current flow in the units at power-on. Use a molded-case circuit breaker and a magnetic contactor to protect the units from the inrush current. (Refer to Section 5.3)
When using a circuit protector, it is recommended that you use an inertia delay type which will not be tripped by the inrush current.
When the converter unit and drive unit are connected by daisy chain, the total inrush current of the both units flows in.

1) MR-J2S series inrush current when turning on the main circuit/control circuit power supply
The table below shows inrush currents (references) when the maximum permissible voltage (200 V AC class: 253 V AC, 400 V AC class: 528 V AC) is applied. The power supply capacity is 2500 kVA and the wiring length is 1 m.

Converter unit	Servo amplifier	Inrush current (A_{0-P})	
		Main circuit power supply ($L_1/L_2/L_3$)	Control circuit power supply (L_{11}/L_{21})
MR-HP30KA	MR-J2S-30K_	270 A (Attenuates to approximately 20 A in 160 ms)	7 A (Attenuates to approximately 0 A in 200 ms)
	MR-J2S-37K_		
MR-HP55KA4	MR-J2S-30K_4	554 A (Attenuates to approximately 20 A in 80 ms)	15 A (Attenuates to approximately 0 A in 150 ms)
	MR-J2S-37K_4	555 A (Attenuates to approximately 20 A in 100 ms)	
	MR-J2S-45K_4	556 A (Attenuates to approximately 20 A in 100 ms)	
	MR-J2S-55K_4		

2) MR-J4 series inrush current when turning on the main circuit/control circuit power supply
The table below shows inrush currents (references) when the maximum permissible voltage (200 V AC class: 240 V AC, 400 V AC class: 480 V AC) is applied. The power supply capacity is 2500 kVA and the wiring length is 1 m.

Converter unit	Servo amplifier	Inrush current (A_{0-P})	
		Main circuit power supply ($L_1/L_2/L_3$)	Control circuit power supply (L_{11}/L_{21})
MR-CR55K	MR-J4-DU30K_	154 A (Attenuates to approximately 20 A in 150 ms)	31 A (Attenuates to approximately 2 A in 60 ms)
	MR-J4-DU37K_		
MR-CR55K4	MR-J4-DU30K_4	305 A (Attenuates to approximately 20 A in 70 ms)	27 A (Attenuates to approximately 2 A in 45 ms)
	MR-J4-DU37K_4		
	MR-J4-DU45K_4		
	MR-J4-DU55K_4		

5. OPTIONS AND PERIPHERAL EQUIPMENT

5.1 Comparison Table of Cable Option Combinations

Cable option combinations

Application	MR-J2S series	MR-J4 series	Note
Protection coordination cable	MR-J2HBUS_M	MR-J3CDL05M	Connector shape will be changed. Cable must be changed.
Connector set	MR-J2CNS	MR-J2CN1-A	Connector shape will be changed. Cable must be changed.
Magnetic contactor wiring connector		Note	Prepare a new cable.
Digital I/O connector	MR-HP4CN1	Note	Connector shape will be changed. Cable must be changed.
Terminal connector	MR-A-TM		

Note. Packed with a converter unit

5.1.1 MR-J3CDL05M (0.5 m) Protection Coordination Cable

⚠ Note ●When fabricating a protection coordination cable, do wiring correctly. Failure to do so may result in the servo motor working unexpectedly.

This is a cable to connect a converter unit and drive unit.

(1) Internal wiring diagram

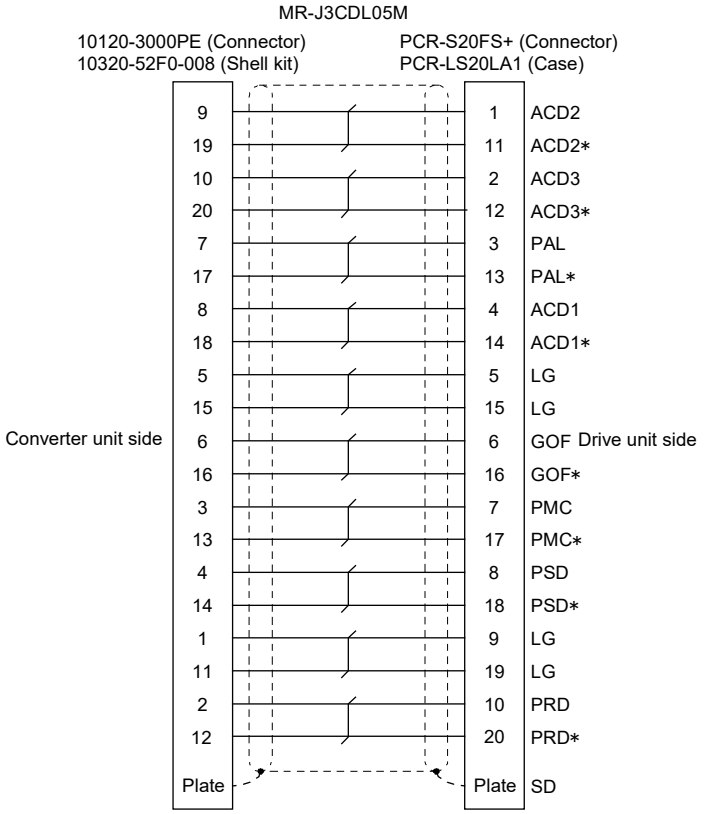

(2) Fabrication of a protection coordination cable

Fabricate a cable according to the internal wiring diagram of the section (1) using an MR-J2CN1-A connector set and recommended wires shown below.

Model	Length [m]	Core size [mm^2]	Number of cores	Characteristics of a core			Cable OD Cable outer diameter [mm] (Note 2)	Recommended wire type
				Configuration [wires/mm]	Conductor resistance [Ω/km]	insulator outer diameter insulator OD d [mm] (Note 1)		
MR-J3CDL05M	0.5	0.08	20 (10 pairs)	7/0.127	222 or less	0.38	6.1	UL 20276 AWG#28 10 pair (cream)

Note 1. d is as shown below.

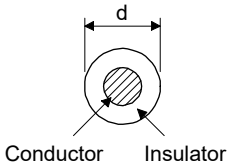

2. This is the standard outside diameter. Although no tolerance is described, the diameter can be up to 10% larger than shown in the table.

5.2 Wire Selection Example

POINT

- For wiring to comply with the IEC/EN/UL/CSA standard, refer to "MR-CV_/MR-CR55K_/MR-J4-DU_(-RJ) Instruction Manual". To comply with other standards, use wires compliant with each standard.
- Selection conditions of wire size is as follows.
  Wiring condition: In-air, one-row wiring
  Wiring length: 30 m or lower (MR-J2S series)
  50 m or lower (MR-J4 series)

POINT

- If using the existing cables, refer to "[Appendix 2] Introduction to Renewal Tool".

5.2.1 MR-J2S-series power supply wire size

The following diagram shows the wires used for wiring. Use the wires or equivalent given in this section.

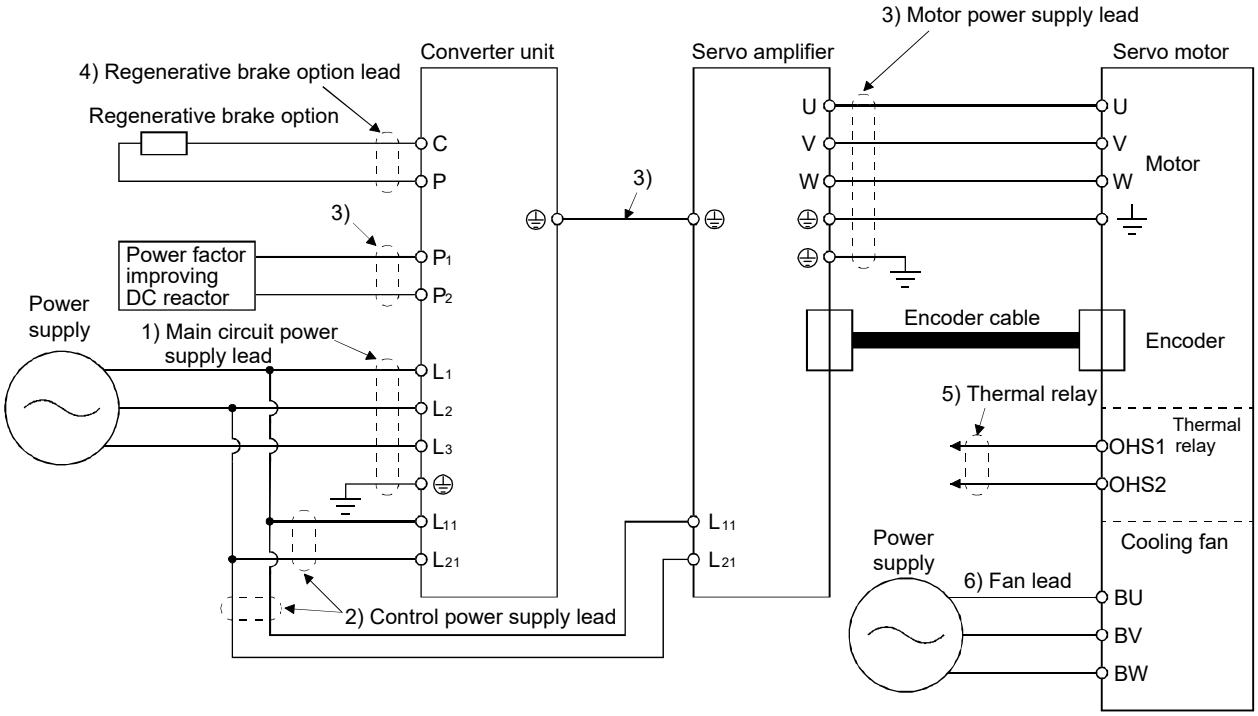

In this case, the power supply wire used is a 600 V plastic one and the wiring distance is 30 m or less.
When the wiring distance exceeds 30 m, select another wire size in consideration of the voltage drop.
The alphabet letters (a, b, c) on the table correspond to crimp terminals used when wiring a servo amplifier.
The method of wiring a servo motor differs depending on the type and capacity of the servo motor.
To comply with the UL/cUL (CSA) standard, use UL-approved copper wires rated at 60 ˚C or higher for wiring.

Wire size selection example 1 (IV wire)
Recommended wire

Converter unit	Drive unit	Wire [mm²]					
		1) $L_1/L_2/L_3/⏚$	2) L_{11}/L_{21}	3) U/V/W P1/P2/⏚	4) P/C	5) OHS1/OHS2	6) BU/BV/BW
MR-HP30KA	MR-J2S-30KA/B	50 (AWG1/0)	2 (AWG14)	60 (AWG2/0)	5.5 (AWG10)	1.25 (AWG16)	1.25 (AWG16)
	MR-J2S-37KA/B	60 (AWG2/0)		80 (AWG3/0)			
MR-HP55KA4	MR-J2S-30KA4/B4	22 (AWG4)		30 (AWG2)			
	MR-J2S-37KA4/B4	30 (AWG2)		38 (AWG2)			
	MR-J2S-45KA4/B4	38 (AWG2)		50 (AWG1/0)			
	MR-J2S-55KA4/B4	50 (AWG1/0)		60 (AWG2/0)			

5.2.2 MR-J4-series, power supply wire size

The following diagram shows the wires used for wiring. Use the wires given in this section or equivalent.

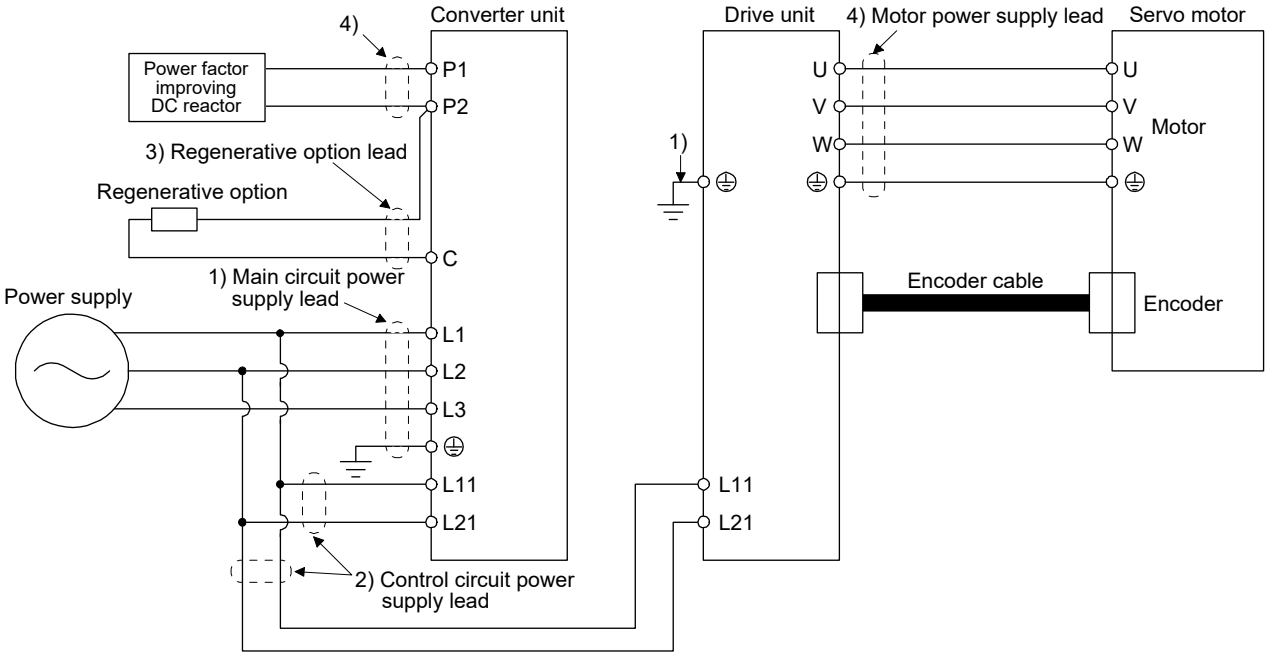

(1) Example of selecting the wire sizes

For the power supply wire, use a 600 V grade heat-resistant polyvinyl chloride insulated wire (HIV wire). The table below shows selection examples of power supply wire sizes.

Wire size selection example (HIV wire)

Recommended wire

Converter unit (Note 2)	Drive unit (Note 2)	Wire [mm²] (Note1, 3)			
		1) L1/L2/L3/⏚	2) L11/L21	3) P2/C	4) U/V/W P1/P2/⏚
MR-CR55K	MR-J4-DU30K_	38 (AWG2): c	1.25 to 2 (AWG 16 to 14): g (Note 4)	5.5 (AWG10): a	60 (AWG2/0): d
	MR-J4-DU37K_	60 (AWG2/0): d			60 (AWG2/0): d
MR-CR55K4	MR-J4-DU30K_4	22 (AWG4): e			22 (AWG4): e
	MR-J4-DU37K_4	22 (AWG4): e			38 (AWG 2): f
	MR-J4-DU45K_4	38 (AWG2): c			38 (AWG2): c
	MR-J4-DU55K_4	38 (AWG2): c			38 (AWG2): c

Note 1. Alphabets in the table indicate crimping tools. For crimp terminals and applicable tools, refer to (2) of this section.
2. To connect these wires to a terminal block, make sure to use the screws that come with the terminal block.
3. Selected based on the servo motor with the largest rated current of all the servo motors available.
4. To comply with the IEC/EN/UL/CSA standard, use a wire of 2 mm².

(2) Selection example of crimp terminals

The table below shows selection examples of crimp terminals for a terminal block of a drive unit or converter unit when the wires described in (1) of this section are used.

Symbol	Drive unit/converter unit side crimp terminal				
	Crimp terminal (Note 2)	Applicable tool			
		Body	Head	Dice	Manufacturer
a	FVD5.5-10	YNT-1210S			JST
b	FVD22-10	YF-1 E-4	YNE-38	DH-123 DH-113	
c (Note 1)	R38-10	YPT-60-21		TD-124 TD-112	
		YF-1 E-4	YET-60-1		
d (Note 1)	R60-10	YPT-60-21		TD-125 TD-113	
		YF-1 E-4	YET-60-1		
e	FVD22-8	YF-1 E-4	YNE-38	DH-123 DH-113	
f (Note 1)	R38-8	YPT-60-21		TD-124 TD-112	
		YF-1 E-4	YET-60-1		
g	FVD2-4	YNT-1614			

Note 1. Cover the crimped portion with an insulating tape.

2. Installation of a crimp terminal may be impossible depending on the size, so make sure to use the recommended crimp terminal or one equivalent to it.

5.3 Selection of No-Fuse Breakers, Fuses, and Magnetic Contactors (example)

5.3.1 MR-J2S-series, no-fuse breakers and magnetic contactors (recommended)

Always use one molded-case circuit breaker/one magnetic contactor with one servo amplifier.

Servo amplifier	Converter unit	Molded-case circuit breaker			Magnetic contactor
		Current		Voltage AC	
		Power factor improving DC reactor not used	Power factor improving DC reactor used		
MR-J2S-30KA/B	MR-HP30KA	400 A frame 250 A	225 A frame 225 A	240 V	S-N150
MR-J2S-37KA/B		400 A frame 300 A	400 A frame 300 A		S-N180
MR-J2S-30KA4/B4	MR-HP55KA4	225 A frame 150 A	225 A frame 125 A	600Y/ 347 V	S-N95
MR-J2S-37KA4/B4		225 A frame 175 A	225 A frame 150 A		S-N125
MR-J2S-45KA4/B4		225 A frame 225 A	225 A frame 175 A		S-N150
MR-J2S-55KA4/B4		400 A frame 250 A	225 A frame 225 A		S-N180

5.3.2 MR-J4-series, no-fuse breakers, fuses, and magnetic contactors (recommended)

(1) For main circuit power supply

Always use one molded-case circuit breaker and one magnetic contactor with one converter unit. When using a fuse instead of the molded-case circuit breaker, use the one having the specifications given in this section.

Converter unit	Drive unit	Molded-case circuit breaker (Note 1)			Fuse			Magnetic contactor (Note 2)
		Frame, rated current		Voltage AC [V]	Class	Current [A]	Voltage AC [V]	
		Power factor improving DC reactor not used	Power factor improving DC reactor used					
MR-CR55K	MR-J4-DU30K_	225 A frame 175 A	225 A frame 150 A	240	T	300	300	S-N150
	MR-J4-DU37K_	225 A frame 225 A	225 A frame 175 A			400		S-N180
MR-CR55K4	MR-J4-DU30K_4	100 A frame 100 A	100 A frame 80 A	480		175	600	S-N65
	MR-J4-DU37K_4	125 A frame 125 A	100 A frame 100 A			200		S-N80
	MR-J4-DU45K_4	225 A frame 150 A	125 A frame 125 A			300		S-N95
	MR-J4-DU55K_4	225 A frame 175 A	225 A frame 150 A			300		S-N150

Note 1. To comply with the IEC/EN/UL/CSA standard, refer to App. 2.
2. Use a magnetic contactor with an operation delay time (interval between current being applied to the coil until closure of contacts) of 80 ms or less.

(2) For control circuit power supply

When the wiring for the control circuit power supply (L11, L21) is thinner than that for the main circuit power supply (L1, L2, L3), install an overcurrent protection device (molded-case circuit breaker or fuse) to protect the branch circuit.

(a) Converter unit

Converter unit	Molded-case circuit breaker (Note)		Fuse (Class T)		Fuse (Class K5)	
	Frame, rated current	Voltage AC [V]	Current [A]	Voltage AC [V]	Current [A]	Voltage AC [V]
MR-CR55K	30 A frame 5 A	240	1	300	1	250
MR-CR55K4	30 A frame 5 A	480	1	600	1	600

Note. To make a converter unit comply with the IEC/EN/UL/CSA standard, refer to App. 2.

(b) Drive unit

Drive unit	Molded-case circuit breaker (Note)		Fuse (Class T)		Fuse (Class K5)	
	Frame, rated current	Voltage AC [V]	Current [A]	Voltage AC [V]	Current [A]	Voltage AC [V]
MR-J4-DU30K_	30 A frame 5 A	240	1	300	1	250
MR-J4-DU37K_						
MR-J4-DU30K_4	30 A frame 5 A	480	1	600	1	600
MR-J4-DU37K_4						
MR-J4-DU45K_4						
MR-J4-DU55K_4						

Note. To make a drive unit comply with the IEC/EN/UL/CSA standard, refer to App. 2.

5.4 FR-BU2-(H) Brake Unit

POINT

- In torque control mode, EM2 signals of a drive unit are the same as its EM1 signals.
- Use a 200 V class brake unit and resistor unit for a 200 V class converter unit as well as a 400 V class brake unit and resistor unit for a 400 V class converter unit. Do not use different voltage class units together.
- Do not install a brake unit or resistor unit horizontally or obliquely, otherwise their heat dissipation effect will deteriorate. Make sure to install them vertically.
- The temperature of resistor unit case rises up to 100 °C or more. Make sure that any wires or flammables do not come in contact with the case.
- Use a brake unit in ambient temperature of -10 to 50 °C. Note that the ambient temperature for brake units is different from that for converter units (0 to 55 °C).
- Configure the circuit in such a way that when a malfunction occurs, the power supply is shut off by using an alarm output from a brake unit or resistor unit.
- Use a brake unit in combination with other units as described in Section 5.4.1.
- A brake unit and a regenerative option (regenerative resistors) cannot be used together.
- When using a brake unit, set parameters as described in the table below.

Parameter	Setting value
[Pr. PA01] of converter units	_ _ 0 0 (initial value)
[Pr. PA02] of drive units	_ _ 0 1

Connect a brake unit to the buses of a converter unit (between L+ and L- of TE2-1). Brake units regenerate larger power than MR-RB regenerative options. Brake units are used when there is insufficient regenerative ability in regenerative options.
When using a brake unit, make sure to refer to the "FR-BU2 Instruction Manual".

5.4.1 Selection

Use a converter unit, a brake unit, and a resistor unit in the combination described in the table below.

Brake unit		Resistor unit	Number of connected units	Permissible continuous power [kW]	Resultant resistance [Ω]	Converter unit
200 V class	FR-BU2-55K	FR-BR-55K	2 (in parallel)	7.82	1	MR-CR55K
		MT-BR5-55K	2 (in parallel)	11.0	1	
400 V class	FR-BU2-H55K	FR-BR-H55K	2 (in parallel)	7.82	4	MR-CR55K4
	FR-BU2-H75K	MT-BR5-H75K	2 (in parallel)	15.0	3.25	

5.4.2 Parameter setting of brake units

Normally, it is unnecessary to change the FR-BU2-(H) parameters. The table below shows permission for changing each parameter.

Parameter		Permission	Remarks
Number	Name		
0	Brake mode switching	NO	Do not change the setting.
1	Monitor display data selection	Available	Refer to the "FR-BU2 installation guide".
2	Input terminal function selection 1	NO	Do not change the setting.
3	Input terminal function selection 2		
77	Parameter write selection		
78	Cumulative energization time carrying-over times		
CLr	Parameter clear		
ECL	Alarm history clear		
C1	For manufacturer setting		

5.4.3 Connection example

POINT

●Connecting the PR terminal of a brake unit to the L+ terminal of a converter unit will cause a malfunction to the brake unit. Make sure to connect the PR terminal of a brake unit to that of a resistor unit.

(1) Use of the FR-BR-(H) resistor unit

POINT

●When connecting two brake units in parallel, use FR-BU2-(H) for both. Otherwise an alarm or malfunction may occur.

●Make sure to connect the master and slave terminals (MSG, SD) of one brake unit to the master and the slave of the other respectively.

●Do not connect as shown below.

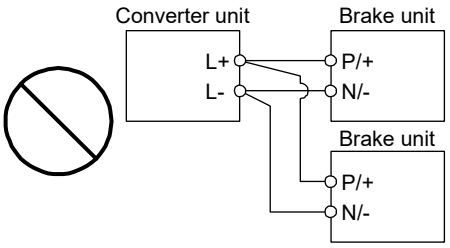

Connecting multiple brake units together to L+ and L-.

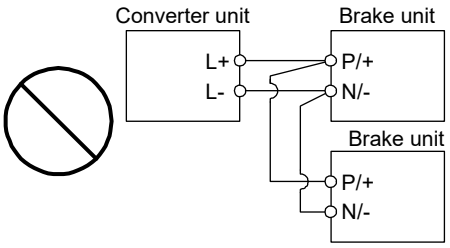

Connecting multiple brake units by daisy chain.

(a) When the magnetic contactor drive output is enabled

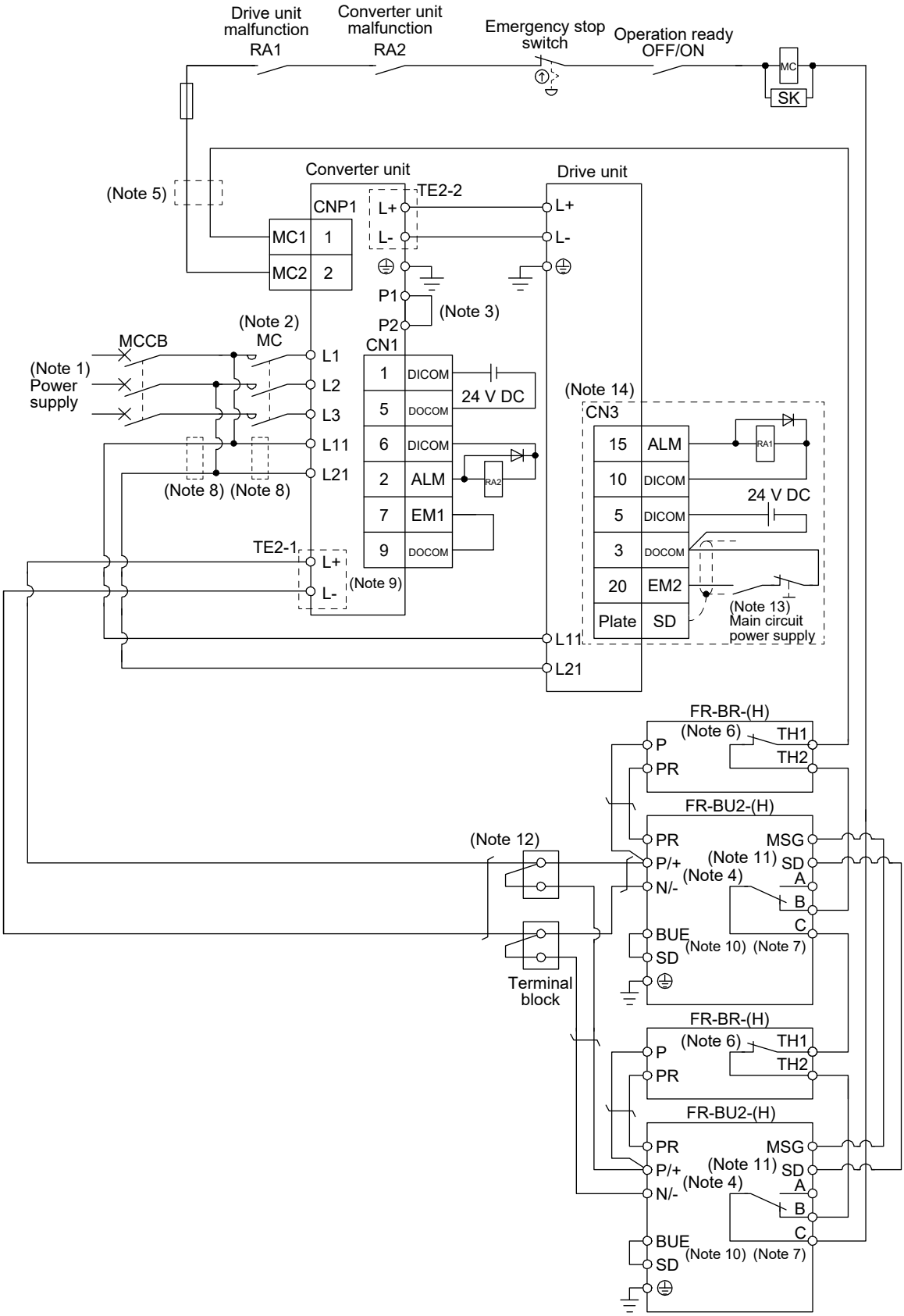

Note
1. For the power supply specifications, refer to Part 7 "Common Reference Material".
2. Use a magnetic contactor with an operation delay time (interval between current being applied to the coil until closure of contacts) of 80 ms or less. Bus voltage decreases according to the voltage and operation pattern of the main circuit, and there may be a shift in dynamic brake deceleration during forced stop deceleration. If dynamic brake deceleration is not desired, delay the time to turn off the electromagnetic contactor.
3. P1 and P2 are connected in factory. When using the power factor improving DC reactor, remove the short-circuit bar across P1 and P2 before connecting the reactor. For details, refer to Chapter 7 in Part 9.
4. Make sure that the connection destinations of the P/+ terminal and N/- terminal of a brake unit are correct. Otherwise a malfunction will occur to a converter unit or brake unit.
5. For 400 V class, use a step-down transformer.
6. Contact rating: 1b normally closed contact, 5 A at 110 V AC/3 A at 220 V AC
   Normal: TH1 and TH2 are connected. Abnormal: TH1 and TH2 are disconnected.
7. Contact rating: 230 V AC_0.3 A/30 V DC_0.3 A
   Normal: B and C are connected/A and C are disconnected. Abnormal: B and C are disconnected/A and C are connected.
8. Install an overcurrent protection device (molded-case circuit breaker or fuse) to protect the branch circuit. (Refer to Section 5.3 in Part 5.)
9. Do not connect multiple wires directly to L+ and L- terminals of TE2-1 of a converter unit.
10. Make sure to connect between BUE and SD. (Wired in factory.)
11. Make sure that the connection destinations of MSG terminal and SD terminal of a brake unit are correct. Otherwise a malfunction will occur to a converter unit or brake unit.
12. Connect L+ and L- terminals of TE2-1 of a converter unit to terminal blocks by using wires described in (4) of this section.
13. In order to prevent unexpected restarting of the drive unit, configure the circuit so that EM2 is also turned off when the main circuit power supply is turned off.
14. This wiring diagram is for MR-J4-DU_B_. The way to interface MR-J4-DU_ is the same as MR-J4-_. Refer to each servo amplifier instruction manual.

(b) When the magnetic contactor drive output is disabled

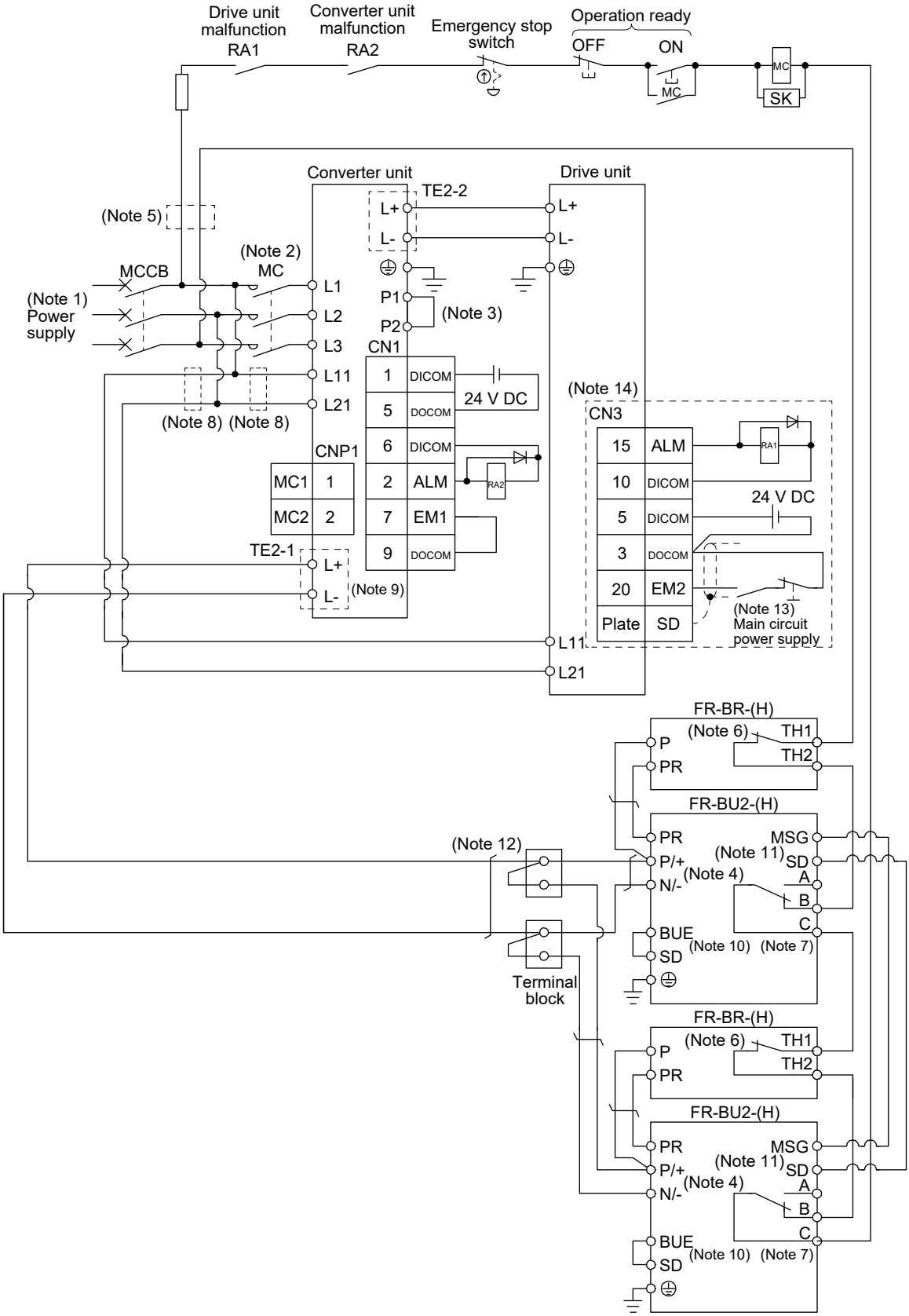

Note
1. For the power supply specifications, refer to Part 7 "Common Reference Material".
2. Use a magnetic contactor with an operation delay time (interval between current being applied to the coil until closure of contacts) of 80 ms or less. Bus voltage decreases according to the voltage and operation pattern of the main circuit, and there may be a shift in dynamic brake deceleration during forced stop deceleration. If dynamic brake deceleration is not desired, delay the time to turn off the electromagnetic contactor.
3. P1 and P2 are connected in factory. When using the power factor improving DC reactor, remove the short-circuit bar across P1 and P2 before connecting the reactor. For details, refer to Chapter 7 in Part 9.
4. Make sure that the connection destinations of the P/+ terminal and N/- terminal of a brake unit are correct. Otherwise a malfunction will occur to a converter unit or brake unit.
5. For 400 V class, use a step-down transformer.
6. Contact rating: 1b normally closed contact, 5 A at 110 V AC/ 3 A at 220 V AC
   Normal: TH1 and TH2 are connected. Abnormal: TH1 and TH2 are disconnected.
7. Contact rating: 230 V AC_0.3 A/30 V DC_0.3 A
   Normal: B and C are connected/A and C are disconnected. Abnormal: B and C are disconnected/A and C are connected.
8. Install an overcurrent protection device (molded-case circuit breaker or fuse) to protect the branch circuit. (Refer to Section 5.3 in Part 5.)
9. Do not connect multiple wires directly to L+ and L- terminals of TE2-1 of a converter unit.
10. Make sure to connect between BUE and SD. (Wired in factory.)
11. Make sure that the connection destinations of MSG terminal and SD terminal of a brake unit are correct. Otherwise a malfunction will occur to a converter unit or brake unit.
12. Connect L+ and L- terminals of TE2-1 of a converter unit to terminal blocks by using wires described in (4) of this section.
13. In order to prevent unexpected restarting of the drive unit, configure the circuit so that EM2 is also turned off when the main circuit power supply is turned off.
14. This wiring diagram is for MR-J4-DU_B_. The way to interface MR-J4-DU_ is the same as MR-J4-_. Refer to each servo amplifier instruction manual.

(2) Use of the MT-BR5-(H) resistor unit

(a) When connecting one converter unit to one brake unit

1) When the magnetic contactor drive output is enabled

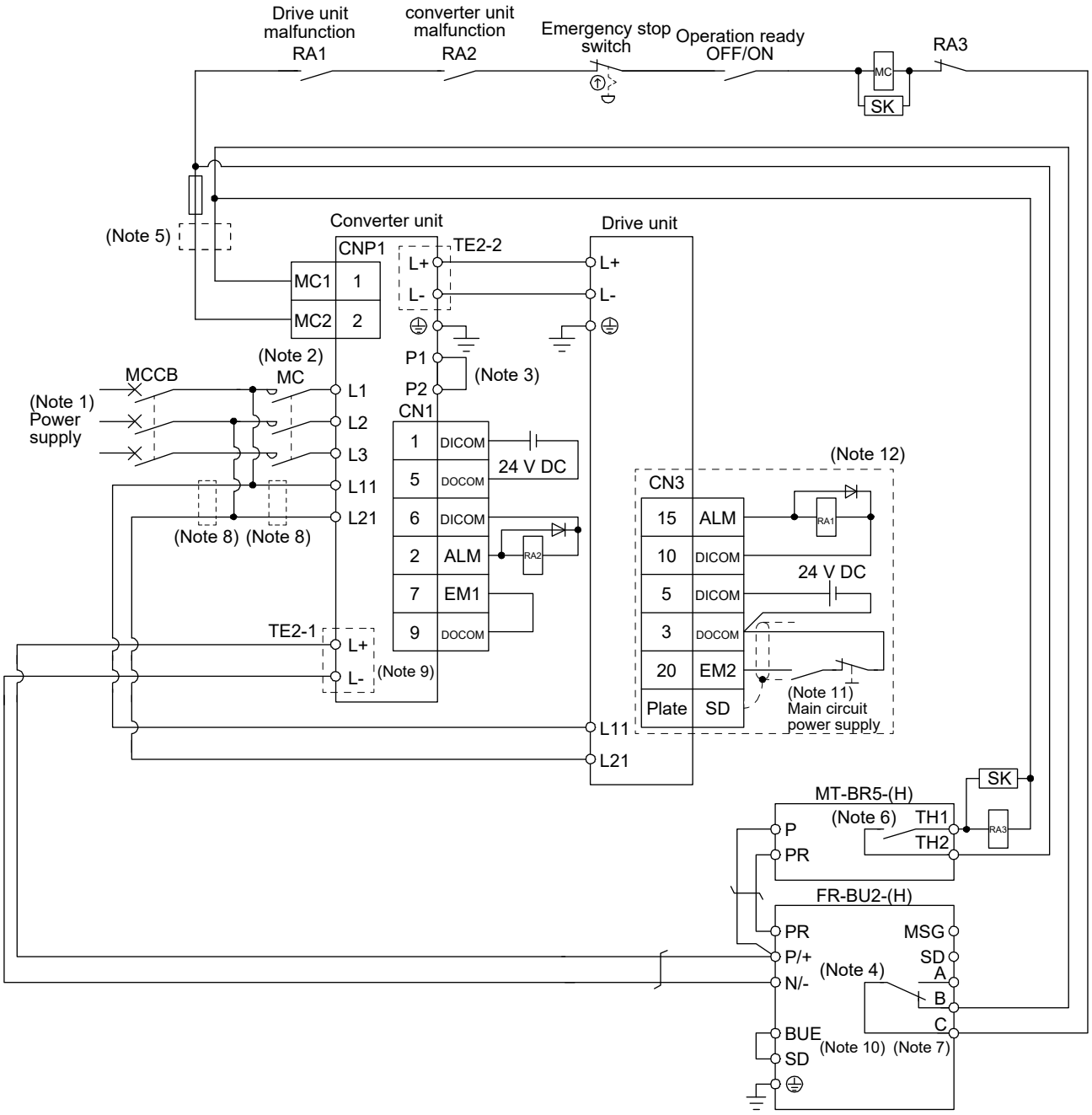

Note
1. For the power supply specifications, refer to Part 7 "Common Reference Material".
2. Use a magnetic contactor with an operation delay time (interval between current being applied to the coil until closure of contacts) of 80 ms or less. Bus voltage decreases according to the voltage and operation pattern of the main circuit, and there may be a shift in dynamic brake deceleration during forced stop deceleration. If dynamic brake deceleration is not desired, delay the time to turn off the electromagnetic contactor.
3. P1 and P2 are connected in factory. When using the power factor improving DC reactor, remove the short-circuit bar across P1 and P2 before connecting the reactor. For details, refer to Chapter 7 in Part 9.
4. Make sure that the connection destinations of the P/+ terminal and N/- terminal of a brake unit are correct. Otherwise a malfunction will occur to a converter unit or brake unit.
5. For 400 V class, use a step-down transformer.
6. Contact rating: 1a normally open contact, 5 A at 110 V AC/ 3 A at 220 V AC
   Normal: TH1 and TH2 are disconnected. Abnormal: TH1 and TH2 are connected.
7. Contact rating: 230 V AC_0.3 A/30 V DC_0.3 A
   Normal: B and C are connected/A and C are disconnected. Abnormal: B and C are disconnected/A and C are connected.
8. Install an overcurrent protection device (molded-case circuit breaker or fuse) to protect the branch circuit. (Refer to Section 5.3 in Part 5.)
9. Do not connect multiple wires directly to L+ and L- terminals of TE2-1 of a converter unit.
10. Make sure to connect between BUE and SD. (Wired in factory.)
11. In order to prevent unexpected restarting of the drive unit, configure the circuit so that EM2 is also turned off when the main circuit power supply is turned off.
12. This wiring diagram is for MR-J4-DU_B_. The way to interface MR-J4-DU_ is the same as MR-J4-_. Refer to each servo amplifier instruction manual.

2) When the magnetic contactor drive output is disabled

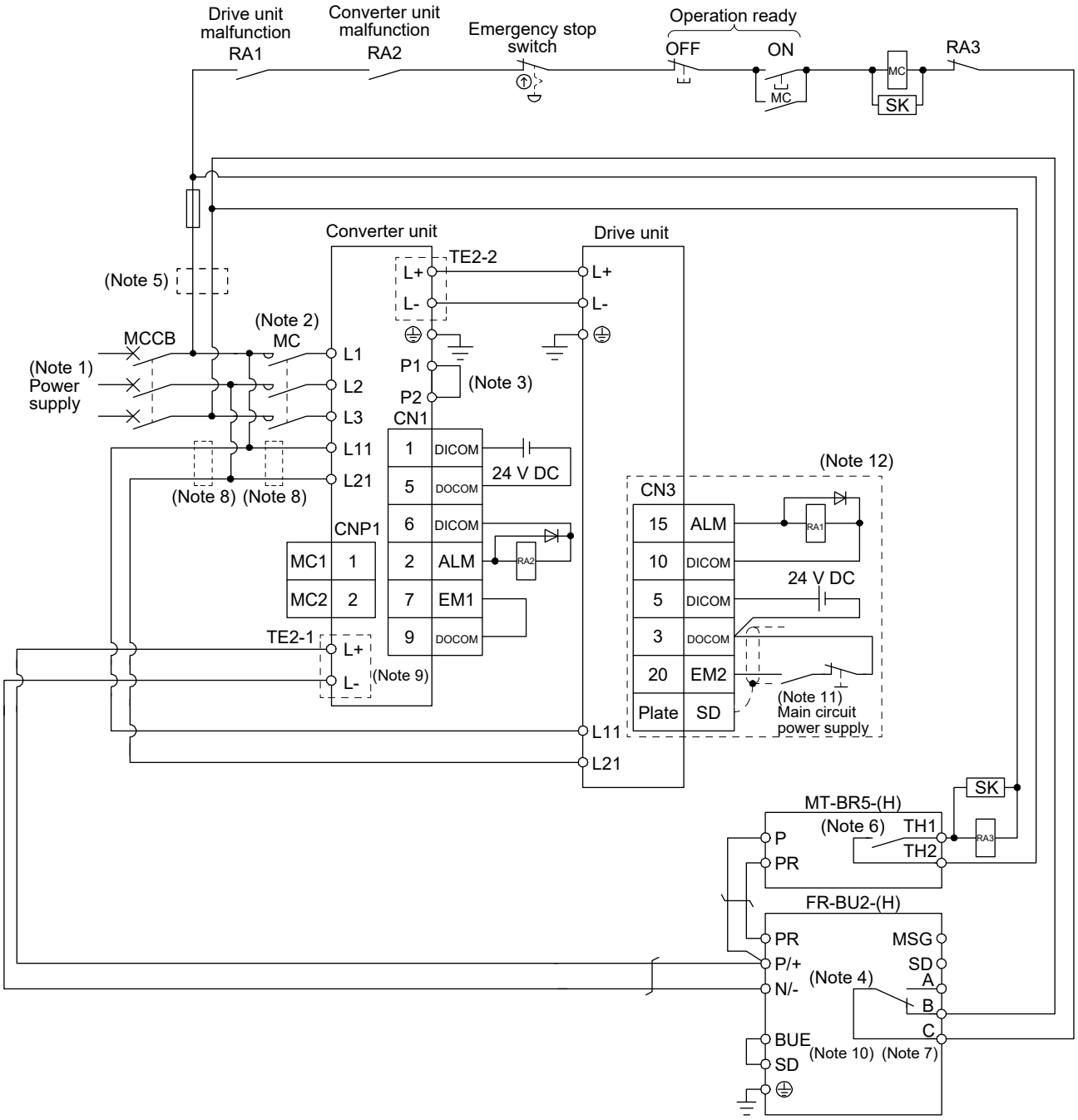

Note
1. For the power supply specifications, refer to Part 7 "Common Reference Material".
2. Use a magnetic contactor with an operation delay time (interval between current being applied to the coil until closure of contacts) of 80 ms or less. Bus voltage decreases according to the voltage and operation pattern of the main circuit, and there may be a shift in dynamic brake deceleration during forced stop deceleration. If dynamic brake deceleration is not desired, delay the time to turn off the electromagnetic contactor.
3. P1 and P2 are connected in factory. When using the power factor improving DC reactor, remove the short-circuit bar across P1 and P2 before connecting the reactor. For details, refer to Chapter 7 in Part 9.
4. Make sure that the connection destinations of the P/+ terminal and N/- terminal of a brake unit are correct. Otherwise a malfunction will occur to a converter unit or brake unit.
5. For 400 V class, use a step-down transformer.
6. Contact rating: 1a normally open contact, 5 A at 110 V AC/3 A at 220 V AC
   Normal: TH1 and TH2 are disconnected. Abnormal: TH1 and TH2 are connected.
7. Contact rating: 230 V AC_0.3 A/30 V DC_0.3 A
   Normal: B and C are connected/A and C are disconnected. Abnormal: B and C are disconnected/A and C are connected.
8. Install an overcurrent protection device (molded-case circuit breaker or fuse) to protect the branch circuit. (Refer to Section 5.3 in Part 5.)
9. Do not connect multiple wires directly to L+ and L- terminals of TE2-1 of a converter unit.
10. Make sure to connect between BUE and SD. (Wired in factory.)
11. In order to prevent unexpected restarting of the drive unit, configure the circuit so that EM2 is also turned off when the main circuit power supply is turned off.
12. This wiring diagram is for MR-J4-DU_B_. The way to interface MR-J4-DU_ is the same as MR-J4-_. Refer to each servo amplifier instruction manual.

(b) When connecting one converter unit to two brake units

POINT

- When connecting two brake units in parallel, use FR-BU2-(H) for both. Otherwise an alarm or malfunction may occur.
- Make sure to connect the master and slave terminals (MSG, SD) of one brake unit to those of the other respectively.
- Do not connect as shown below.

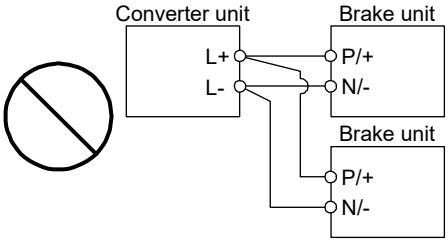

Connecting multiple brake units together to L+ and L-.

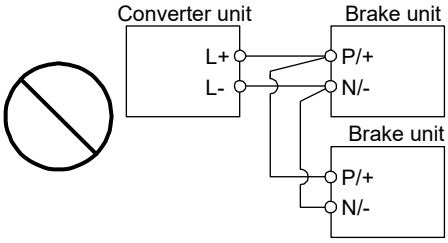

Connecting multiple brake units by daisy chain.

1) When the magnetic contactor drive output is enabled

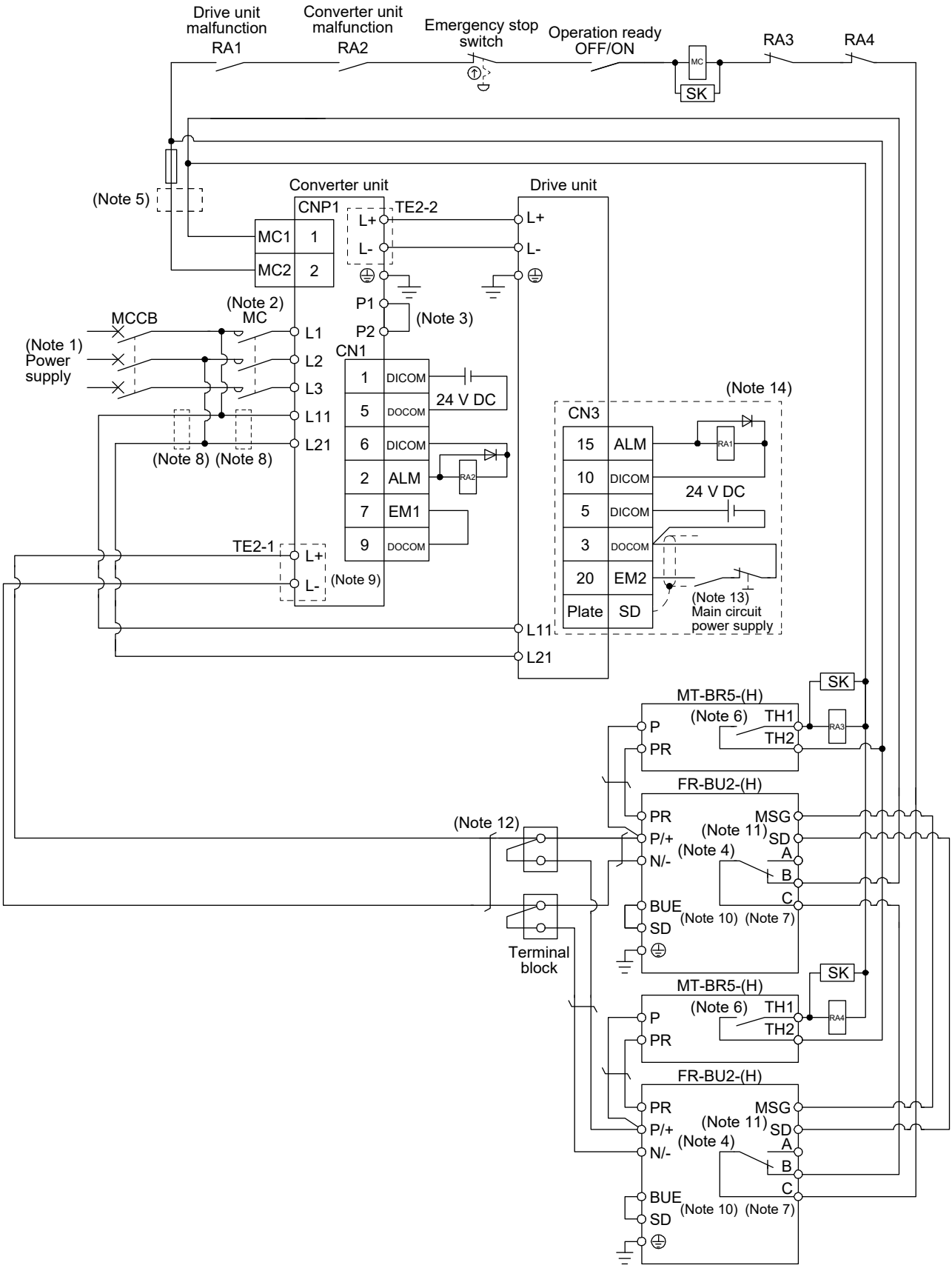

Note
1. For the power supply specifications, refer to Part 7 "Common Reference Material".
2. Use a magnetic contactor with an operation delay time (interval between current being applied to the coil until closure of contacts) of 80 ms or less. Bus voltage decreases according to the voltage and operation pattern of the main circuit, and there may be a shift in dynamic brake deceleration during forced stop deceleration. If dynamic brake deceleration is not desired, delay the time to turn off the electromagnetic contactor.
3. P1 and P2 are connected in factory. When using the power factor improving DC reactor, remove the short-circuit bar across P1 and P2 before connecting the reactor. For details, refer to Chapter 7 in Part 9.
4. Make sure that the connection destinations of the P/+ terminal and N/- terminal of a brake unit are correct. Otherwise a malfunction will occur to a converter unit or brake unit.
5. For 400 V class, use a step-down transformer.
6. Contact rating: 1a normally open contact, 5 A at 110 V AC/3 A at 220 V AC
   Normal: TH1 and TH2 are disconnected. Abnormal: TH1 and TH2 are connected.
7. Contact rating: 230 V AC_0.3 A/30 V DC_0.3 A
   Normal: B and C are connected/A and C are disconnected. Abnormal: B and C are disconnected/A and C are connected.
8. Install an overcurrent protection device (molded-case circuit breaker or fuse) to protect the branch circuit. (Refer to Section 5.3 in Part 5.)
9. Do not connect multiple wires directly to L+ and L- terminals of TE2-1 of a converter unit.
10. Make sure to connect between BUE and SD. (Wired in factory.)
11. Make sure that the connection destinations of MSG terminal and SD terminal of a brake unit are correct. Otherwise a malfunction will occur to a converter unit or brake unit.
12. Connect L+ and L- terminals of a converter unit to terminal blocks by using wires described in (4) of this section.
13. In order to prevent unexpected restarting of the drive unit, configure the circuit so that EM2 is also turned off when the main circuit power supply is turned off.
14. This wiring diagram is for MR-J4-DU_B_. The way to interface MR-J4-DU_ is the same as MR-J4-_. Refer to each servo amplifier instruction manual.

2) When the magnetic contactor drive output is disabled

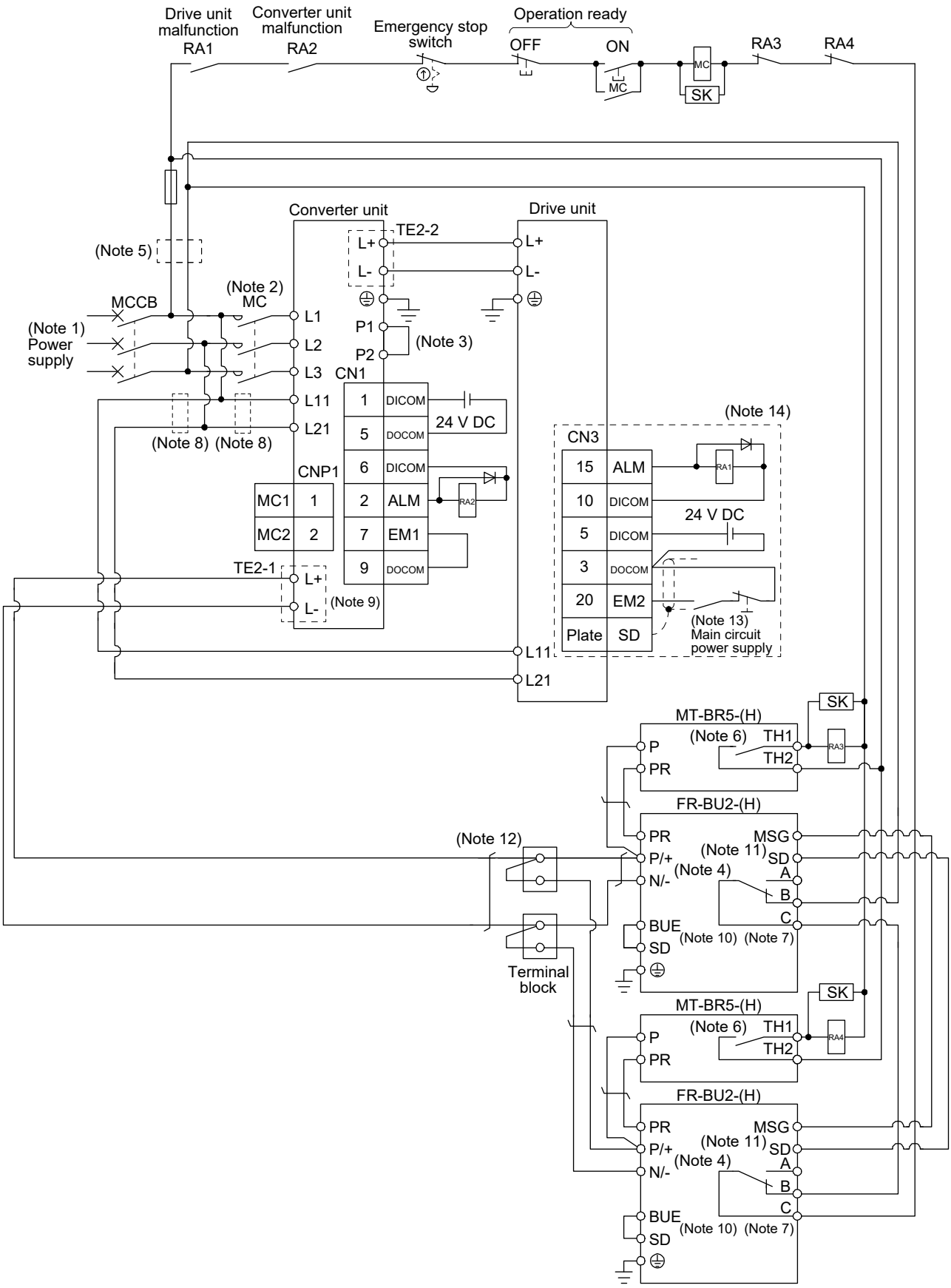

Note
1. For the power supply specifications, refer to Part 7 "Common Reference Material".
2. Use a magnetic contactor with an operation delay time (interval between current being applied to the coil until closure of contacts) of 80 ms or less. Bus voltage decreases according to the voltage and operation pattern of the main circuit, and there may be a shift in dynamic brake deceleration during forced stop deceleration. If dynamic brake deceleration is not desired, delay the time to turn off the electromagnetic contactor.
3. P1 and P2 are connected in factory. When using the power factor improving DC reactor, remove the short-circuit bar across P1 and P2 before connecting the reactor. For details, refer to Chapter 7 in Part 9.
4. Make sure that the connection destinations of the P/+ terminal and N/- terminal of a brake unit are correct. Otherwise a malfunction will occur to a converter unit or brake unit.
5. For 400 V class, use a step-down transformer.
6. Contact rating: 1a normally open contact, 5 A at 110 V AC/ 3 A at 220 V AC
   Normal: TH1 and TH2 are disconnected. Abnormal: TH1 and TH2 are connected.
7. Contact rating: 230 V AC_0.3 A/30 V DC_0.3 A
   Normal: B and C are connected/A and C are disconnected. Abnormal: B and C are disconnected/A and C are connected.
8. Install an overcurrent protection device (molded-case circuit breaker or fuse) to protect the branch circuit. (Refer to Section 5.3 in Part 5.)
9. Do not connect multiple wires directly to L+ and L- terminals of TE2-1 of a converter unit.
10. Make sure to connect between BUE and SD. (Wired in factory.)
11. Make sure that the connection destinations of MSG terminal and SD terminal of a brake unit are correct. Otherwise a malfunction will occur to a converter unit or brake unit.
12. Connect L+ and L- terminals of a converter unit to terminal blocks by using wires described in (4) of this section.
13. In order to prevent unexpected restarting of the drive unit, configure the circuit so that EM2 is also turned off when the main circuit power supply is turned off.
14. This wiring diagram is for MR-J4-DU_B_. The way to interface MR-J4-DU_ is the same as MR-J4-_. Refer to each servo amplifier instruction manual.

(3) Wiring precautions

Use as short wires as possible between a converter unit and brake unit and between a resistor unit and a brake unit. If using a wire of 5 m or longer, be sure to use a twist wire (with 5 or more twists in 1 m). Make sure that a wire is 10 m or shorter even when it is a twisted wire. If a wire of 5 m or longer is not a twisted wire, or if a wire is a twisted wire and longer than 10 m, a malfunction may occur to a brake unit.

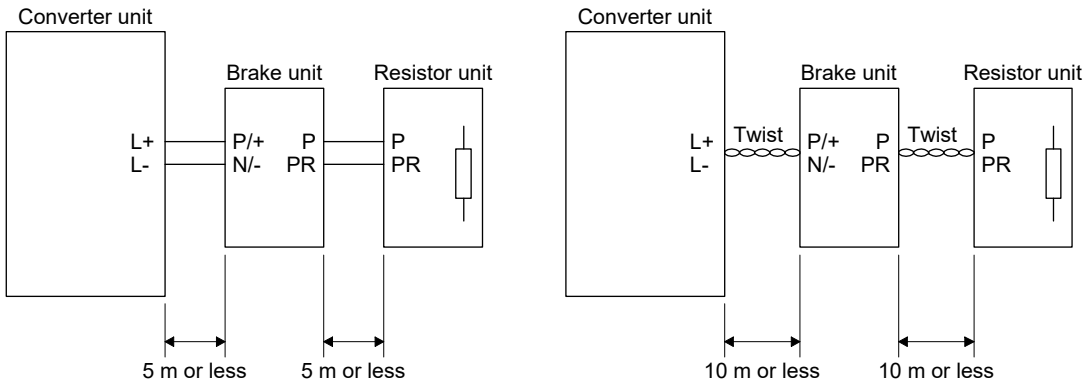

(4) Wires

(a) Wires for brake units

HIV wire (600 V grade heat-resistant polyvinyl chloride insulated wire) is recommended for use in brake units.

1) Main circuit terminals

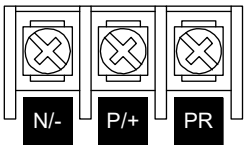

Terminal block

Brake unit		Main circuit terminal screw size	Crimp terminal N/-, P/+, PR, ⏚	Tightening torque [N•m]	Cable gauge N/-, P/+, PR, ⏚ HIV wire [mm²]	Cable gauge N/-, P/+, PR, ⏚ AWG
200 V class	FR-BU2-55K	M6	14-6	4.4	14	6
400 V class	FR-BU2-H55K	M5	5.5-5	2.5	5.5	10
	FR-BU2-H75K	M6	14-6	4.4	14	6

2) Control circuit terminal

POINT
●Fix a screw tightly otherwise the wire may come off or a malfunction may occur. Fixing a screw too tightly can damage the screw or brake unit, resulting in a short circuit or malfunction.

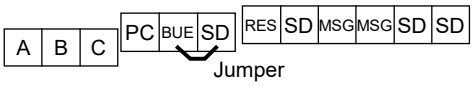

Terminal block

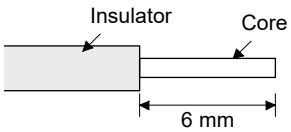

Do wiring with the stripped cable twisted to prevent it from becoming loose. Do not solder it.

Screw size: M3

Tightening torque: 0.5 N•m to 0.6 N•m

Cable gauge: 0.3 mm² to 0.75 mm²

Driver: Small-size slotted screw driver

(Blade thickness: 0.4 mm/Blade width: 2.5 mm)

(b) Wires between a converter unit and terminal blocks when two brake units are used.

Brake unit		Cable gauge	
		HIV wire [mm²]	AWG
200 V class	FR-BU2-55K	38	2
400 V class	FR-BU2-H55K	14	6
	FR-BU2-H75K	38	2

(5) Crimp terminals for L+ and L- terminals of TE2-1 of a converter unit.

(a) Recommended crimp terminals

POINT

● Installation of a crimp terminal may be impossible depending on the size, so make sure to use the recommended crimp terminal or one equivalent to it.

Converter unit		Brake unit	Connectable units	Crimp terminal (manufacturer)	Applicable tool (Note 1)
200 V class	MR-CR55K	FR-BU2-55K	2	38-S6 (JST) (Note 2) R38-6S (NICHIFU) (Note 2)	a
400 V class	MR-CR55K4	FR-BU2-H55K	2	FVD14-6 (JST)	b
		FR-BU2-H75K	2	38-S6 (JST) (Note 2) R38-6S (NICHIFU) (Note 2)	a

Note 1. Symbols in the "Applicable tool" column indicate applicable tools described in (b) of this section (5).
2. Coat the crimping part with an insulation tube.

(b) Applicable tool

Symbol	Converter unit side crimp terminal				
	Crimp terminal	Applicable tool			Manufacturer
		Body	Head	Dice	
a	38-S6	YPT-60-21		TD-124 TD-112	JST
		YF-1 E-4	YET-60-1		
	R38-6S	NOP60 NOM60			NICHIFU
b	FDV14-6	YF-1 E-4	YNE-38	DH-112 DH-122	JST

5.4.4 Dimensions

(1) FR-BU2-(H) brake unit
FR-BU2-55K/FR-BU2-H55K/FR-BU2-H75K

[Unit: mm]

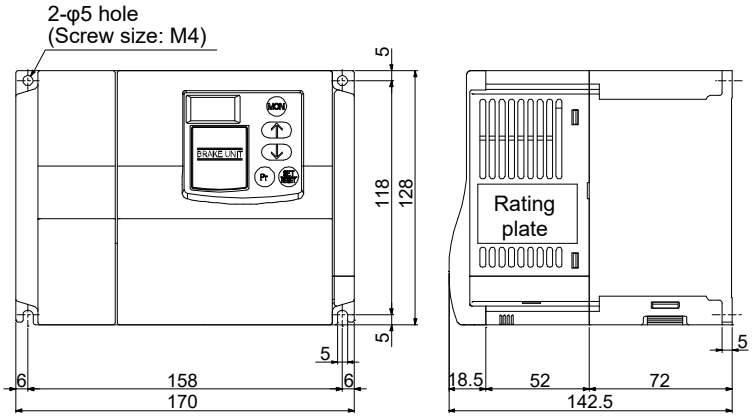

(2) FR-BR-(H) resistor unit

[Unit: mm]

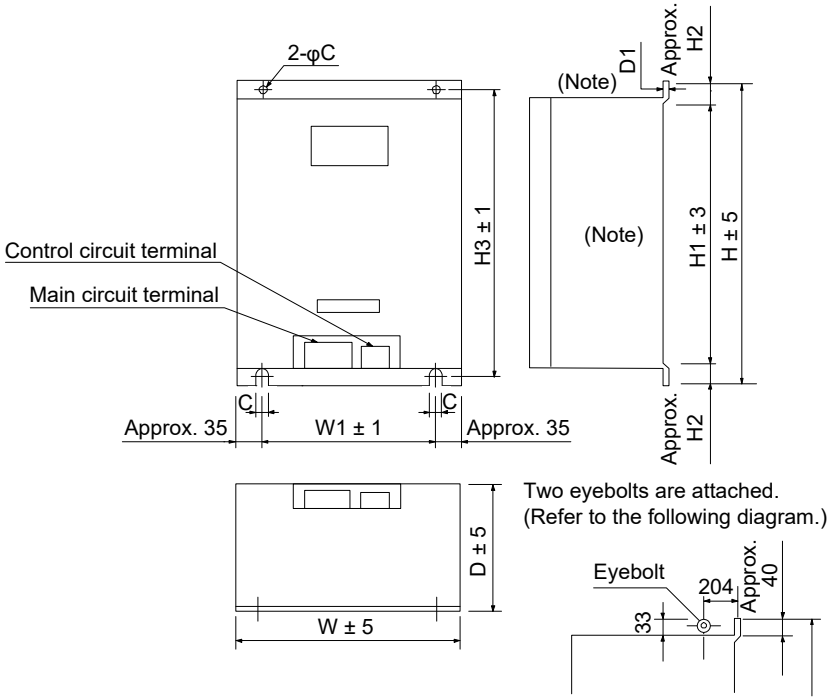

Note. Air vents are provided on both right and left sides and the top of the body. The bottom of the body is open.

Resistor unit		W	W1	H	H1	H2	H3	D	D1	C	Approx. mass [kg]
200 V class	FR-BR-55K	480	410	700	620	40	670	450	3.2	12	70
400 V class	FR-BR-H55K	480	410	700	620	20	670	450	3.2	12	70

(3) MT-BR5-(H) resistor unit

[Unit: mm]

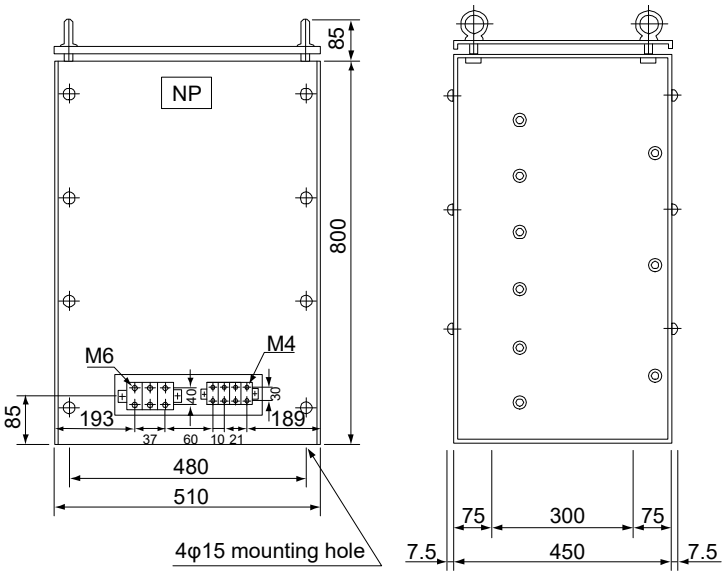

Resistor unit		Resistance	Approximate mass [kg]
200 V class	MT-BR5-55K	2.0 Ω	50
400 V class	MT-BR5-H75K	6.5 Ω	70

5.5 Comparison of Peripheral Equipment

POINT
●Refer to "Part 9: Review on Replacement of Optional Peripheral Equipment".

MEMO

Part 6
Review on Replacement of MR-J2M with MR-J4

Part 6: Review on Replacement of MR-J2M with MR-J4

1. SUMMARY

This document describes the changes that are applied to when replacing a system using the MR-J2M series with a system using the MR-J4 series. The functions and performance of the MR-J4 series are greatly improved from the MR-J2M series. Mounting dimensions of the both series are significantly different. For the details of the differences, refer to the descriptions in this document.

2. CASE STUDY ON REPLACEMENT OF MR-J2M

2.1 Replacement Method

(1) Simultaneous replacement with MR-J4-_A_ and an HG motor
The currently used connectors or cables need to be replaced. The existing cables cannot be used as they are.

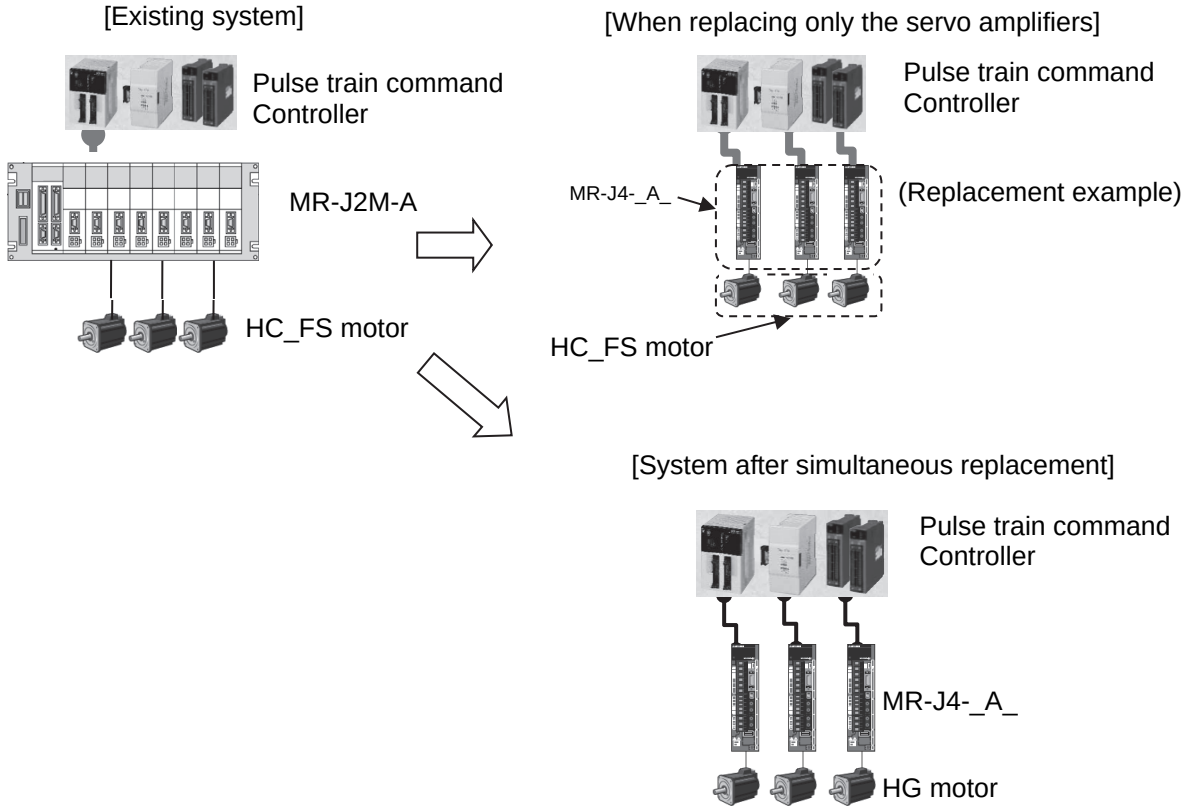

2.2 Equipment Configuration

The models for replacement of both the servo amplifier and servo motor as a set are shown.

Series	Model			Replacement model (example)	Mounting compatibility (O: Compatible)
	Base unit	Interface unit	Drive Unit		
200 V AC General-purpose interface	MR-J2M-BU_	MR-J2M-P8A	MR-J2M-10DU	MR-J4-10A	Note
			MR-J2M-20DU	MR-J4-20A	Note
			MR-J2M-40DU	MR-J4-40A	Note
			MR-J2M-70DU	MR-J4-70A	Note
200 V AC SSCNET interface	MR-J2M-BU_	MR-J2M-P8B	MR-J2M-10DU	MR-J4-10B	Note
			MR-J2M-20DU	MR-J4-20B	Note
			MR-J2M-40DU	MR-J4-40B	Note
			MR-J2M-70DU	MR-J4-70B	Note

Note. These replacement models do not have compatibility in mounting.

3. DIFFERENCES BETWEEN MR-J2M-A AND MR-J4-_A_

3.1 Function Comparison Table

3.1.1 General

Item		MR-J2M series	MR-J4 series	Reference document/items
1	Regenerative resistor	External option	Built-in (200 W or more)	MR-J4-_A_ Servo Amplifier Instruction Manual, Section 11.2
2	Dynamic brake	Built-in	Built-in (Coasting distance is different.)	MR-J4-_A_ Servo Amplifier Instruction Manual, Section 11.3
3	Control circuit power	1-phase 200 V AC to 230 V AC	1-phase 200 V AC to 240 V AC	MR-J4-_A_ Servo Amplifier Instruction Manual, Section 1.3
4	Main circuit power	1-phase/3-phase 200 V AC to 230 V AC 3-phase 200 V AC to 230 V AC	1-phase/3-phase 200 V AC to 240 V AC 3-phase 200 V AC to 240 V AC	MR-J4-_A_ Servo Amplifier Instruction Manual, Section 1.3
5	24 V DC power supply	External supply required	External supply required	MR-J4-_A_ Servo Amplifier Instruction Manual, Section 3.5.4
6	Auto Tuning	Real-time auto tuning: 15 steps	Real-time auto tuning: 40 steps Advanced gain search (available in the future) One-touch tuning	MR-J4-_A_ Servo Amplifier Instruction Manual, Section 6.3
7	Control mode	• Position control mode (pulse command)	• Position control mode (pulse command) • Speed control mode (analog command) • Torque control mode (analog command)	MR-J4-_A_Servo Amplifier Instruction Manual
8	Maximum input pulses	Differential pulse 500 kpulses/s Command pulse: Sink	Differential pulse 4 Mpulses/s Command pulse: Sink/Source	MR-J4-_A_Servo Amplifier Instruction Manual
9	The number of DIO points (excluding EM1)	DI: 5 points × 8 axes, DO: 2 points × 8 axes * When an extension I/O unit is used, DI: 32 points; DO: 8 points added	DI: 9 points, DO: 6 points	MR-J4-_A_Servo Amplifier Instruction Manual
10	DIO interface	Input: Sink Output: Sink	Input: Sink/source Output: Sink/source	MR-J4-_A_ Servo Amplifier Instruction Manual, Section 3.2
11	Analog input/output	(Input) Unprovided (Output) 10-bit or equivalent × 3 ch	(Input) 2 ch Torque: 10-bit; Speed: 14-bit or equivalent (Output) 10-bit or equivalent × 2 ch	MR-J4-_A_ Servo Amplifier Instruction Manual, Section 3.5
12	Number of internal speed commands (General-purpose interface)	0 points	7 points	MR-J4-_A_Servo Amplifier Instruction Manual
13	Parameter setting method	Setup software (SETUP161E)	MR Configurator2 Push-button (General-purpose interface)	MR-J4-_A_Servo Amplifier Instruction Manual, Section 6.1.2
14	Setup software communication	RS-232C	USB	MR-J4-_A_Servo Amplifier Instruction Manual, Section 11.7.3
15	Servo motor (Encoder resolution)	HC-_FS series (17-bit ABS)	HG series (22-bit ABS)	MR-J4-_A_Servo Amplifier Instruction Manual
16	Motor maximum torque	HC-KFS 300% HC-MFS 300%	HG-KR 350% (models with a gear: 300%) HG-MR 300%	MR-J4-_A_Servo Amplifier Instruction Manual
17	LED display	7-segment 5-digit	7-segment 5-digit	MR-J4-_A_Servo Amplifier Instruction Manual
18	Advanced vibration suppression control II	Unprovided	Provided	MR-J4-_A_ Servo Amplifier Instruction Manual, Section 7.1.4
19	Adaptive filter	Provided (I)	Provided (II with improved functions)	MR-J4-_A_Servo Amplifier Instruction Manual, Section 7.1.2
20	Notch filter	Provided (× 2)	Provided (× 5)	MR-J4-_A_ Servo Amplifier Instruction Manual, Section 7.1.6
21	Tough drive	Unprovided	Provided	MR-J4-_A_ Servo Amplifier Instruction Manual, Section 7.3
22	Drive recorder	Unprovided	Provided	MR-J4-_A_Servo Amplifier Instruction Manual
23	Forced stop	EM1 (DB stop)	EM1 (DB stop)/EM2 (deceleration stop) optional	MR-J4-_A_Servo Amplifier Instruction Manual

3.2 Comparison of Standard Connection Diagrams

MR-J2M-A	MR-J4-_A_
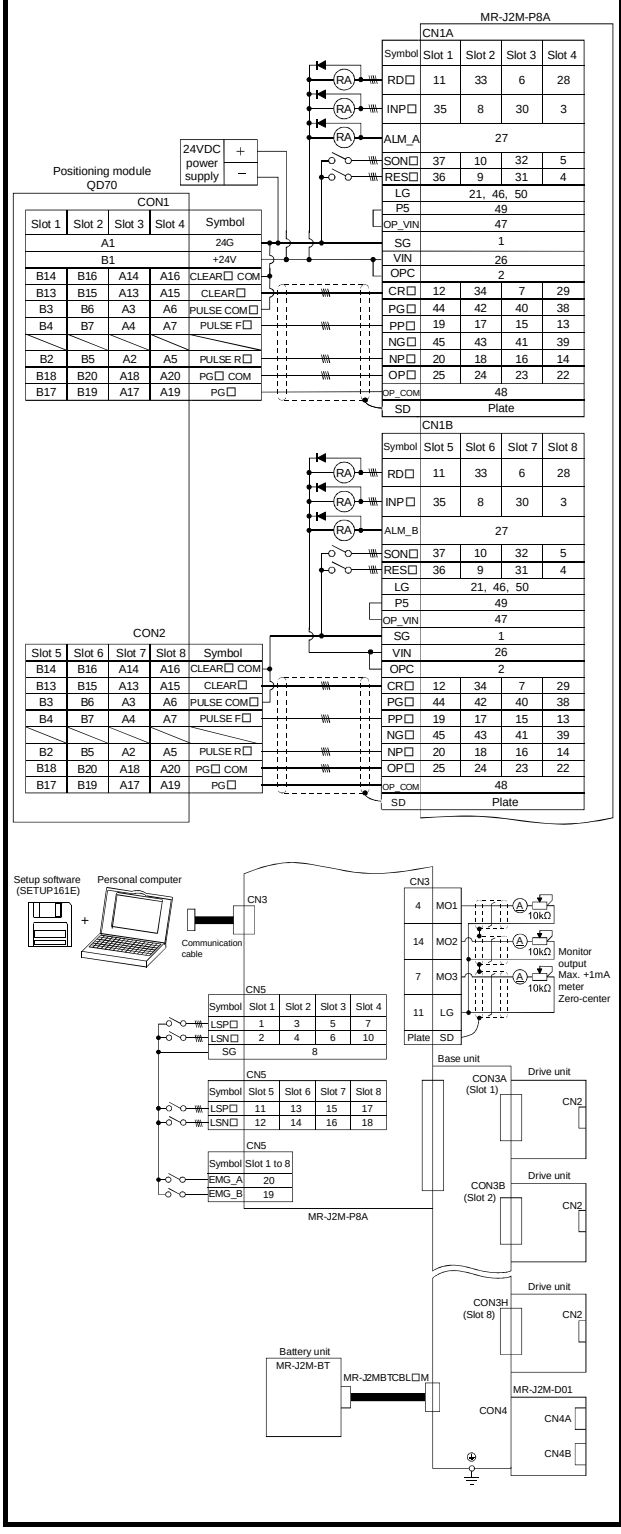	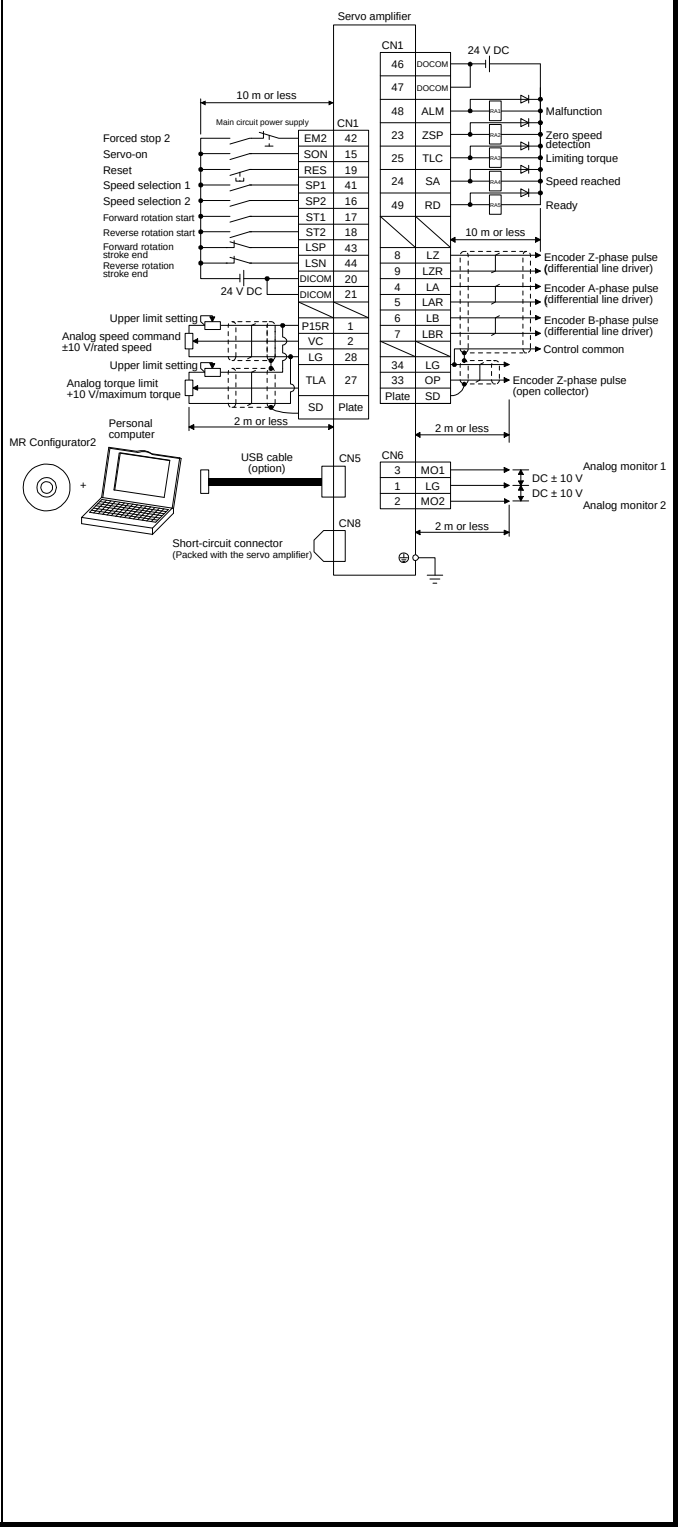

3.3 List of Corresponding Connectors and Terminal Blocks

(1) Connector comparison table

An example of connections with the peripheral equipment is shown below. Refer to the respective Installation Guides and Instruction Manuals for details on signals.

MR-J2M-A

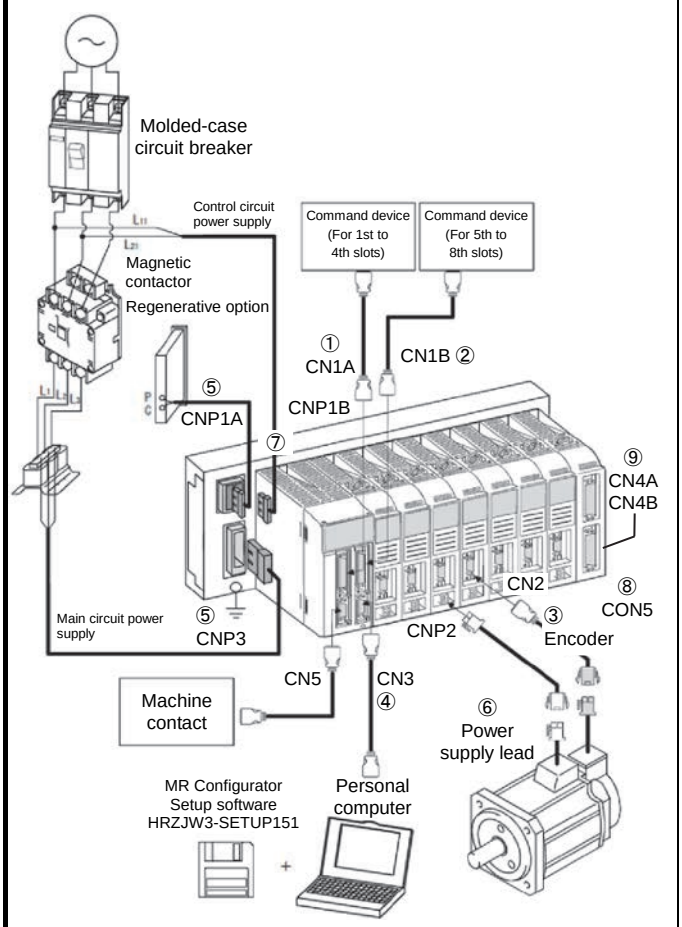

MR-J4-_A_

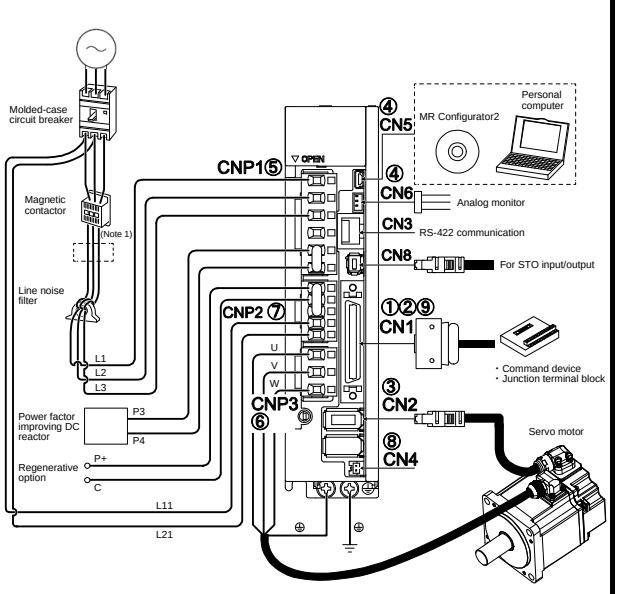

Note 1. The power factor improving AC reactor can also be used. In this case, the power factor improving DC reactor cannot be used.

(2) List of corresponding connectors

	MR-J2M-A			MR-J4-_A_	Note
(1)	I/O signal connector		[CN1A]	I/O signal connector [CN1]	Prepare a new cable.
(2)	I/O signal connector		[CN1B]		
(3)	Encoder connector		[CN2]	Encoder connector [CN2]	Must switch to encoder cable (option) or prepare a new cable.
(4)	Communication connector [CN3]	PC connection		USB communication connector [CN5]	Switch to USB cable (option).
		Analog monitor		Analog monitor connector [CN6]	Switch to monitor cable (option).
(5)	Main circuit power connector		[CNP3]	Main circuit power connector [CNP1]	Switch to the power connector (enclosed with the amplifier).
	Regenerative option connector		[CNP1A]		
(6)	Servo motor power connector		[CNP2]	Servo motor power connector [CNP3]	
(7)	Control circuit power connector		[CNP1B]	Control circuit power connector [CNP2]	
(8)	Battery connector		[CON5]	Battery connector [CN4]	Prepare a new battery.
(9)	Extended I/O unit connector		[CN4A] [CN4B]	I/O signal connector [CN1]	Prepare a new cable.

Note. When not using the STO function, attach a short-circuit connector supplied with a servo amplifier onto CN8 (STO input signal connector).

(3) Comparison of signals

MR-J2M-A		Signal symbol	MR-J4-_A_	
Connector pin assignment	Connector pin No.		Connector pin No.	Connector pin assignment
CN1A 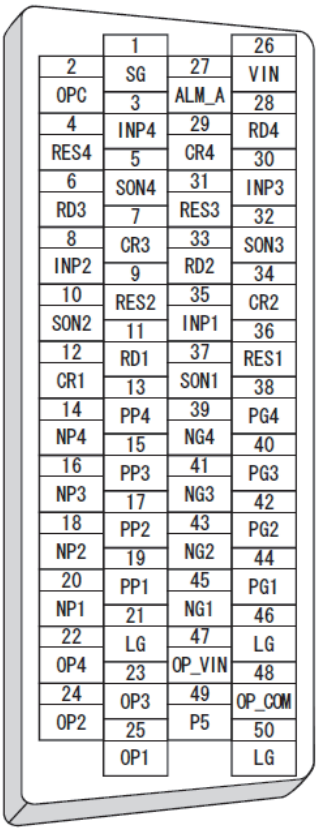 CN1B 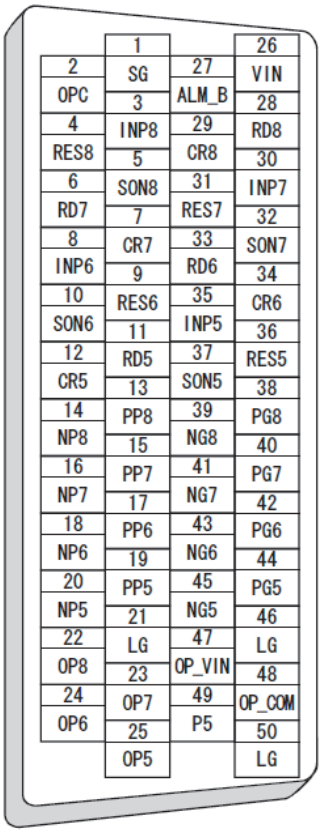	CN1A-50 CN1A-46 CN1A-21 CN1B-50 CN1B-46 CN1B-21	LG	CN1-3 CN1-28 CN1-30 CN1-34	CN1 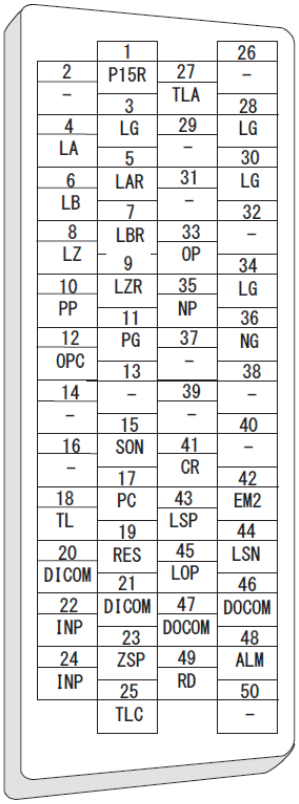
	CN1A-20 (Slot 1) CN1A-18 (Slot 2) CN1A-16 (Slot 3) CN1A-14 (Slot 4) CN1B-20 (Slot 5) CN1B-18 (Slot 6) CN1B-16 (Slot 7) CN1B-14 (Slot 8)	NP	CN1-35	
	CN1A-19 (Slot 1) CN1A-17 (Slot 2) CN1A-15 (Slot 3) CN1A-13 (Slot 4) CN1B-19 (Slot 5) CN1B-17 (Slot 6) CN1B-15 (Slot 7) CN1B-13 (Slot 8)	PP	CN1-10	
	CN1A-12 (Slot 1) CN1A-34 (Slot 2) CN1A-7 (Slot 3) CN1A-29 (Slot 4) CN1B-12 (Slot 5) CN1B-34 (Slot 6) CN1B-7 (Slot 7) CN1B-29 (Slot 8)	CR	CN1-41	
	CN1A-26 CN1B-26	VIN (DICOM)	CN1-20 CN1-21	
	CN1A-1 CN1B-1	SG (DOCOM)	CN1-46 CN1-47	
	CN1A-45 (Slot 1) CN1A-43 (Slot 2) CN1A-41 (Slot 3) CN1A-39 (Slot 4) CN1B-45 (Slot 5) CN1B-43 (Slot 6) CN1B-41 (Slot 7) CN1B-39 (Slot 8)	NG	CN1-36	
	CN1A-44 (Slot 1) CN1A-42 (Slot 2) CN1A-40 (Slot 3) CN1A-38 (Slot 4) CN1B-44 (Slot 5) CN1B-42 (Slot 6) CN1B-40 (Slot 7) CN1B-38 (Slot 8)	PG	CN1-11	
	CN1A-25 (Slot 1) CN1A-24 (Slot 2) CN1A-23 (Slot 3) CN1A-22 (Slot 4) CN1B-25 (Slot 5) CN1B-24 (Slot 6) CN1B-23 (Slot 7) CN1B-22 (Slot 8)	OP	CN1-33	
	CN1A-11 (Slot 1) CN1A-33 (Slot 2) CN1A-6 (Slot 3) CN1A-28 (Slot 4) CN1B-11 (Slot 5) CN1B-33 (Slot 6) CN1B-6 (Slot 7) CN1B-28 (Slot 8)	RD	CN1-49	

MR-J2M-A		Signal symbol	MR-J4-_A_	
Connector pin assignment	Connector pin No.		Connector pin No.	Connector pin assignment
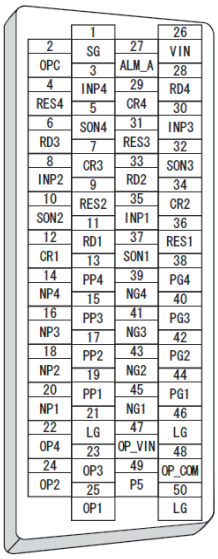 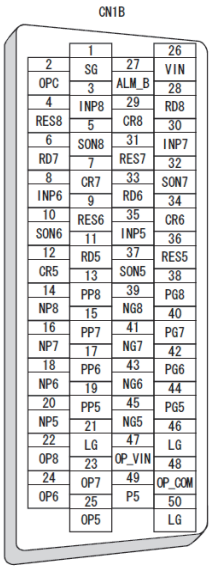 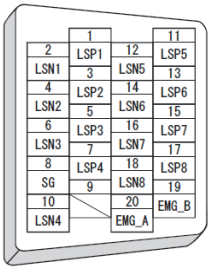 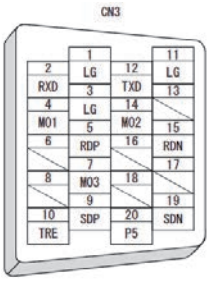	CN1A-35 (Slot 1) CN1A-8 (Slot 2) CN1A-30 (Slot 3) CN1A-3 (Slot 4) CN1B-35 (Slot 5) CN1B-8 (Slot 6) CN1B-30 (Slot 7) CN1B-3 (Slot 8)	INP	CN1-22 CN1-24	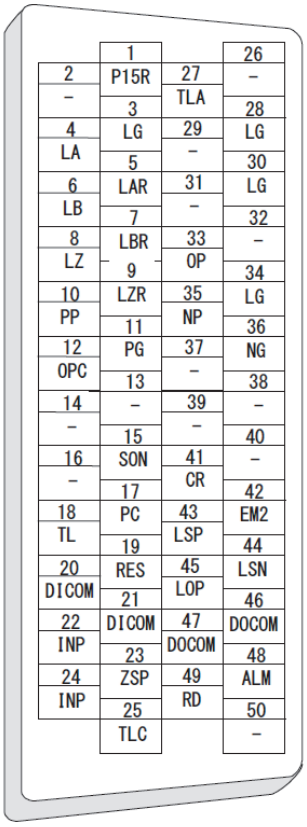
	CN1A-37 (Slot 1) CN1A-10 (Slot 2) CN1A-32 (Slot 3) CN1A-5 (Slot 4) CN1B-37 (Slot 5) CN1B-10 (Slot 6) CN1B-32 (Slot 7) CN1B-5 (Slot 8)	SON	CN1-15	
	CN1A-36 (Slot 1) CN1A-9 (Slot 2) CN1A-31 (Slot 3) CN1A-4 (Slot 4) CN1B-36 (Slot 5) CN1B-9 (Slot 6) CN1B-31 (Slot 7) CN1B-4 (Slot 8)	RES	CN1-19	
	CN5-19 (Slot 1-4) CN5-20 (Slot 5-8)	EMG (EM2)	CN1-42	
	CN5-1 (Slot 1) CN5-3 (Slot 2) CN5-5 (Slot 3) CN5-7 (Slot 4) CN5-11 (Slot 5) CN5-13 (Slot 6) CN5-15 (Slot 7) CN5-17 (Slot 8)	LSP	CN1-43	
	CN5-2 (Slot 1) CN5-4 (Slot 2) CN5-6 (Slot 3) CN5-10 (Slot 4) CN5-12 (Slot 5) CN5-14 (Slot 6) CN5-16 (Slot 7) CN5-18 (Slot 8)	LSN	CN1-44	
	CN1A-27 (Slot 1-4) CN1B-27 (Slot 5-8)	ALM	CN1-48	
	CN3-1 CN3-3 CN3-11 CN3-13	LG	CN6-1	CN6
	CN3-4	MO1	CN6-2	
	CN3-14	MO2	CN6-3	
	CN3-7	MO3	-	

3.4 Comparison of Peripheral Equipment

POINT

●Refer to "Part 9: Review on Replacement of Optional Peripheral Equipment".

3.5 Comparison of Parameters

The correspondence of the MR-J2M series and MR-J4 series parameter numbers is shown below. Refer to the respective Instruction Manuals for detailed specifications of each parameter.

3.5.1 Parameter comparison list

POINT

●Parameters for manufacturer setting are not described here.
●With MR-J4-_A_, the deceleration to a stop function is enabled in the factory setting. To disable the deceleration to a stop function, set [Pr. PA04] to "0 _ _ _".
●For details, refer to "Part 2: Replacement of MR-J2S-_A_ with MR-J4-_A_".

(1) Interface unit MR-J2M-P8A

MR-J2M-A (Interface unit MR-J2M-P8A)		MR-J4-_A_		Note
No.	Name	No.	Name	
0	Serial communication function selection	PC21	RS-422 communication function selection	MR-J4-A supports only RS-422. When the personal computer is RS-232C, use the RS-422/RS-232C conversion cable DSV-CABV (manufactured by Diatrend).
	Alarm history clear	PC18	Alarm history clear	
1	Regenerative option selection	PA02	Regenerative options	The setting must be changed according to option model.
2	Serial communication protocol checksum selection			The MR-J4-_A_ initial setting is "Provided". Separate consultation is required for other settings.
3	Analog monitor 1 output	PC14	Analog monitor 1 output	The setting value must be changed according to monitor output data.
4	Analog monitor 2 output	PC15	Analog monitor 2 output	
5	Analog monitor 3 output			
6	Analog monitor output 1 offset	PC39	Analog monitor 1 offset	Depends on the hardware. The setting values must be changed.
7	Analog monitor output 2 offset	PC40	Analog monitor 2 offset	
8	Analog monitor output 3 offset			
9	Input signal filter	PD29	Input filter setting	Some of the settings cannot be set.
10	Interface unit serial communication station number selection	PC20	Station number setting	
11	1st slot serial communication station number selection	PC20	Station number setting	
12	2nd slot serial communication station number selection	PC20	Station number setting	
13	3rd slot serial communication station number selection	PC20	Station number setting	
14	4th slot serial communication station number selection	PC20	Station number setting	
15	5th slot serial communication station number selection	PC20	Station number setting	
16	6th slot serial communication station number selection	PC20	Station number setting	
17	7th slot serial communication station number selection	PC20	Station number setting	
18	8th slot serial communication station number selection	PC20	Station number setting	
19	IFU parameter writing inhibit	PA19	Parameter writing inhibit	Change the setting value as necessary.
20	Serial communication time-out selection			The initial setting for MR-J4-_A_ is "No time-out check". Separate consultation is required for other settings.

(2) Drive unit MR-J2M-_DU

<table>
<tr><th colspan="2">MR-J2M-A
(Drive unit MR-J2M-_DU)</th><th colspan="2">MR-J4-_A_</th><th rowspan="2">Note</th></tr>
<tr><th>No.</th><th>Name</th><th>No.</th><th>Name</th></tr>
<tr><td>1</td><td>Absolute position detection system</td><td>PA03</td><td>Absolute position detection system</td><td></td></tr>
<tr><td rowspan="2">2</td><td rowspan="2">Auto Tuning</td><td>PA09</td><td>Auto tuning response</td><td>The setting value must be changed based on machine resonance frequency.</td></tr>
<tr><td>PA08</td><td>Auto tuning mode</td><td>The setting value needs to be changed according to the auto tuning mode. Some of the settings cannot be set.
<Gain adjustment mode correspondence table>
<table><tr><th>MR-J2M-A</th><th>MR-J4-_A_</th></tr><tr><td>Interpolation mode</td><td>2 gain adjustment mode 1</td></tr><tr><td>Auto tuning mode 1</td><td>Auto tuning mode 1</td></tr><tr><td>Auto tuning mode 2</td><td>Auto tuning mode 2</td></tr><tr><td>Manual mode 1</td><td></td></tr><tr><td>Manual mode 2</td><td>Manual mode</td></tr></table></td></tr>
<tr><td>3</td><td>Electronic gear numerator</td><td>PA06</td><td>Electronic gear numerator</td><td rowspan="2">The setting value must be changed according to resolution and detection capability.</td></tr>
<tr><td>4</td><td>Electronic gear denominator</td><td>PA07</td><td>Electronic gear denominator</td></tr>
<tr><td>5</td><td>In-position range</td><td>PA10</td><td>In-position range</td><td>Set it per command input pulse before electronic gear conversion for both MR-J2M-A and MR-J4-_A_.</td></tr>
<tr><td>6</td><td>Position loop gain 1.</td><td>PB07</td><td>Model loop gain</td><td>The unit system is different. (rad/s→0.1 rad/s)</td></tr>
<tr><td>7</td><td>Position command acceleration/deceleration time constant</td><td>PB03</td><td>Position command acceleration/deceleration time constant</td><td></td></tr>
<tr><td>16</td><td>Alarm history clear</td><td>PC18</td><td>Alarm history clear</td><td></td></tr>
<tr><td>19</td><td>DRU parameter writing inhibit</td><td>PA19</td><td>Parameter writing inhibit</td><td>Change the setting value as necessary.</td></tr>
<tr><td rowspan="2">20</td><td>Slight vibration suppression control</td><td>PB24</td><td>Slight vibration suppression control</td><td rowspan="2"></td></tr>
<tr><td>Encoder cable communication method selection</td><td>PC22</td><td>Encoder cable communication method selection</td></tr>
<tr><td>21</td><td>Function selection 3 (command pulse selection)</td><td>PA13</td><td>Command pulse input form</td><td></td></tr>
<tr><td>22</td><td>Stop method selection when LSP/LSN is valid</td><td>PD30</td><td>Stop method selection when LSP/LSN is valid</td><td></td></tr>
<tr><td>23</td><td>Feed forward gain</td><td>PB04</td><td>Feed forward gain</td><td></td></tr>
<tr><td>24</td><td>Zero speed</td><td>PC17</td><td>Zero speed</td><td></td></tr>
<tr><td>27</td><td>Encoder output pulses</td><td>PA15</td><td>Encoder output pulse</td><td>Max. output frequency is different.</td></tr>
<tr><td rowspan="2">28</td><td rowspan="2">Internal torque limit 1</td><td>PA11</td><td>Forward rotation torque limit</td><td rowspan="2"></td></tr>
<tr><td>PA12</td><td>Reverse rotation torque limit</td></tr>
<tr><td>33</td><td>Electromagnetic brake sequence output</td><td>PC16</td><td>Electromagnetic brake sequence output</td><td></td></tr>
<tr><td>34</td><td>Load to motor inertia ratio</td><td>PB06</td><td>Load to motor inertia ratio</td><td>The unit system is different.
(0.1-fold→0.01-fold)
Pay attention to the setting value.</td></tr>
<tr><td>35</td><td>Position loop gain 2.</td><td>PB08</td><td>Position loop gain</td><td></td></tr>
<tr><td>36</td><td>Speed loop gain 1.</td><td></td><td></td><td>No corresponding parameter (Setting not required)</td></tr>
<tr><td>37</td><td>Speed loop gain 2.</td><td>PB09</td><td>Speed loop gain</td><td></td></tr>
<tr><td>38</td><td>Speed integral compensation.</td><td>PB10</td><td>Speed integral compensation</td><td>The unit system is different. (ms → 0.1 ms)</td></tr>
<tr><td>39</td><td>Speed differential compensation</td><td>PB11</td><td>Speed differential compensation</td><td></td></tr>
<tr><td>42</td><td>Input signal selection 1</td><td>PD32</td><td>Clear (CR) selection</td><td></td></tr>
<tr><td>51</td><td>Operating method selection for RES (Reset) shorting</td><td>PD30</td><td>Base circuit status selection for RES on</td><td></td></tr>
</table>

MR-J2M-A (Drive unit MR-J2M-_DU)		MR-J4-_A_		Note
No.	Name	No.	Name	
54	Rotation direction selection	PA14	Rotation direction selection	
	Encoder output pulse phase selection Encoder output pulse setting selection	PC19	Encoder output pulse phase selection Encoder output pulse setting selection	
55	Position command acceleration/deceleration time constant control	PB25	Position acceleration/deceleration filter type selection	
58	Machine resonance suppression filter 1	PB13 PB14	Machine resonance suppression filter 1 Notch shape selection 1	Change the setting value according to the frequency and depth.
59	Machine resonance suppression filter 2	PB15 PB16	Machine resonance suppression filter 2 Notch shape selection 2	Change the setting value according to the frequency and depth.
60	Low-pass filter/adaptive vibration suppression control			No corresponding parameter (Machine resonance filters can be automatically adjusted with PB01.)
61	Load to motor inertia ratio 2	PB29	Load to motor inertia ratio after gain switching	The unit system is different. (0.1-fold → 0.01-fold) Pay attention to the setting value.
62	Position loop gain 2 changing ratio	PB30	Position loop gain after gain switching	It is necessary to convert the ratio to a value to change the setting value.
63	Speed loop gain 2 changing ratio	PB31	Speed loop gain after gain switching	
64	Speed integral compensation changing ratio	PB32	Speed integral compensation after gain switching	
65	Gain switching selection	PB26	Gain switching selection	
66	Gain switching condition	PB27	Gain switching condition	
67	Gain switching time constant	PB28	Gain switching time constant	
69	Command pulse multiplication numerator 2	PC32	Command input pulse multiplication numerator 2	
70	Command pulse multiplication numerator 3	PC33	Command input pulse multiplication numerator 3	
71	Command pulse multiplication numerator 4	PC34	Command input pulse multiplication numerator 4	
76	Internal torque limit 2	PC35	Internal torque limit 2	The unit system is different. (% → 0.1%)

4. DIFFERENCES BETWEEN MR-J2M-B AND MR-J4-_B_

POINT

- Before replacement, note that the dimensions, peripheral circuits, and optional peripheral devices for the MR-J2M servo amplifier are different from those for the MR-J4 servo amplifier.
- "QDS motion controller" refers to the following model.
  Q172DSCPU/Q173DSCPU
- "Stand-alone motion controller" refers to the following model.
  Q170MSCPU(-S1)

4.1 Review on Replacement Method

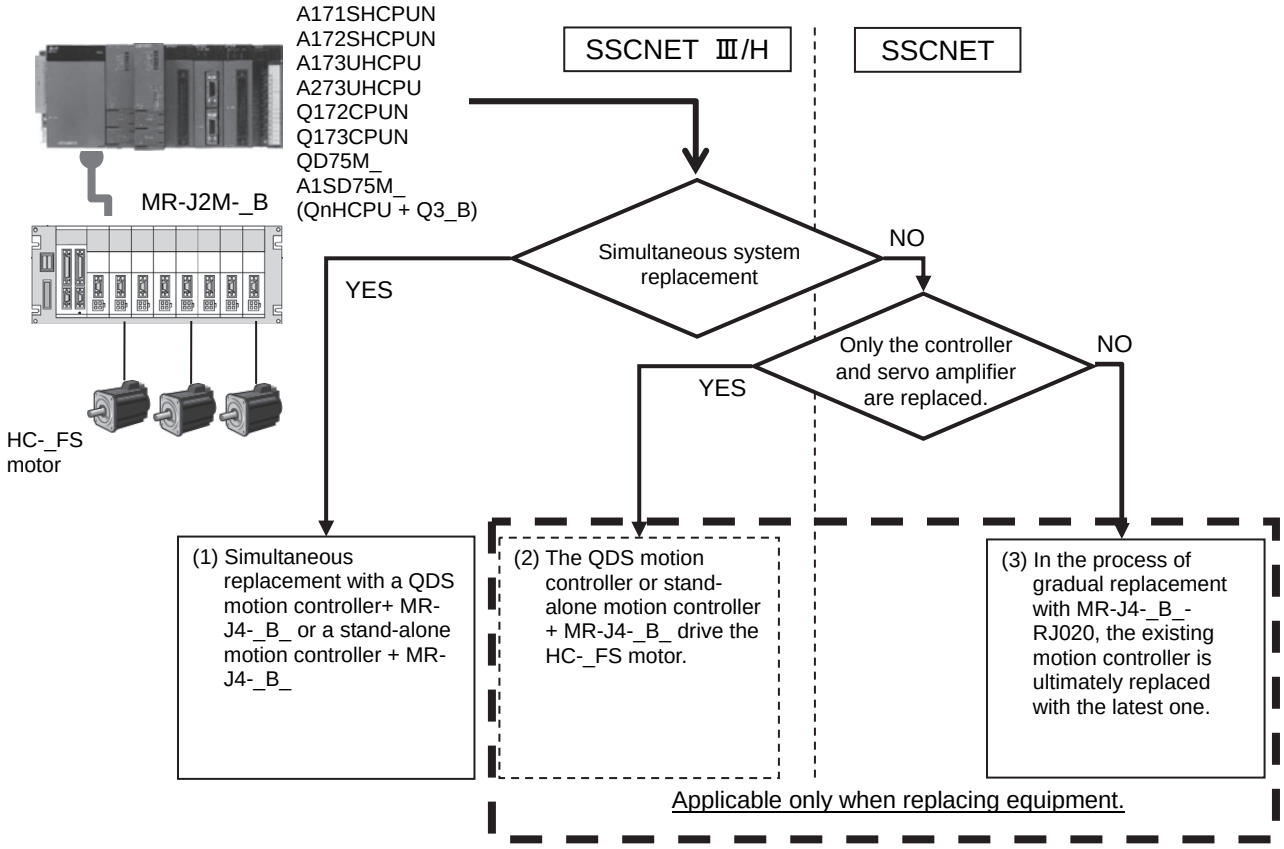

For details about (3), refer to "[Appendix 1] Summary of MR-J4-_B_-RJ020 + MR-J4-T20".

4.2 Replacement Method

(1) For simultaneous replacement

QDS motion controller + MR-J4-_B_ + HG motor	Stand-alone motion controller + MR-J4-_B_ + HG motor
QnUD(E)(H)CPU + QDS motion controller + Q3_DB 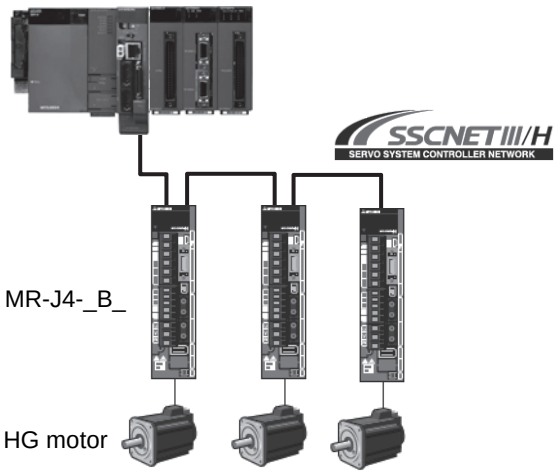 Advantage: Higher-speed motion control and excellent expandability achieve a shorter cycle time.	SSCNET III/H-compatible stand-alone motion controller: Q170MSCPU(-S1) 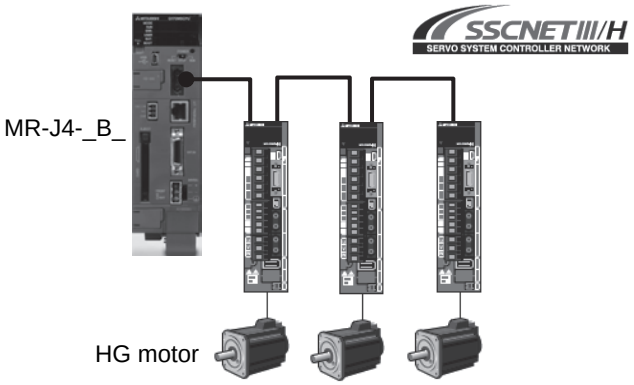 Advantage: High performance equivalent to that of a QDS motion controller can be achieved at a lower cost.

(2) For replacement of only a controller and a servo amplifier

QDS motion controller + MR-J4-_B_ + HC-_FS motor	Stand-alone motion controller + MR-J4-_B_ + HC-_FS motor
QnUD(E)(H)CPU + QDS motion controller + Q3_DB 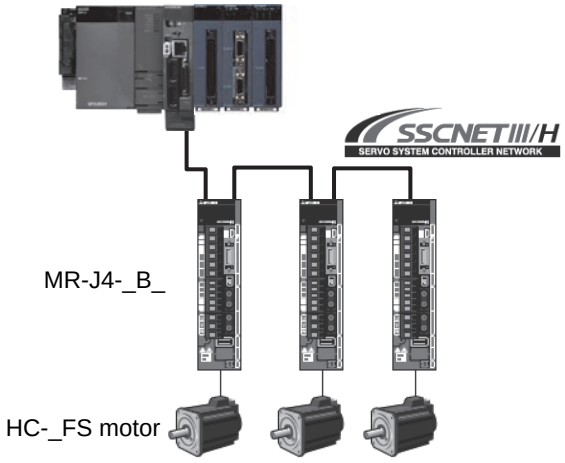 Advantage: Higher-speed motion control and excellent expandability achieve a shorter cycle time without any changes made to the HC-_FS motor.	SSCNET III/H-compatible stand-alone motion controller: Q170MSCPU(-S1) 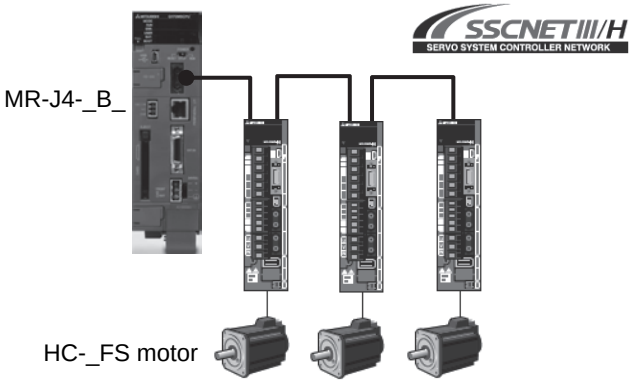 Advantage: High performance equivalent to that of a QDS motion controller can be achieved at a lower cost without any changes made to the HC-_FS motor.

(3) Gradual replacement of MR-J2M-B with MR-J4-_B_
Refer to "[Appendix 1] Summary of MR-J4-_B_-RJ020 + MR-J4-T20".

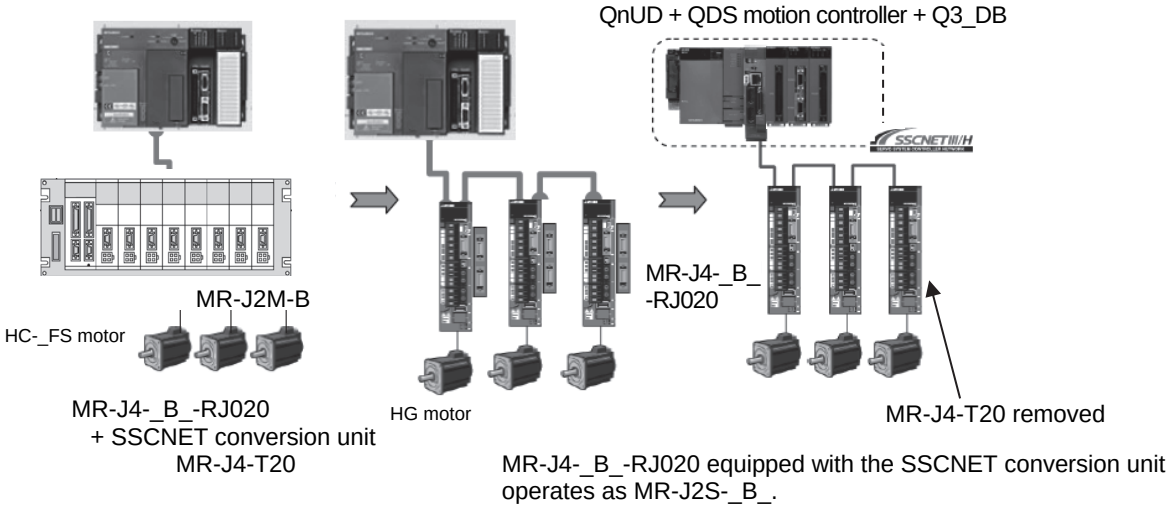

4.3 Function Comparison Table

(1) General
Same as 3.1.1

(2) Comparison of networks
<Comparison of servo system network specifications>

Item	MR-J2M series		MR-J4 series (Note)	
	SSCNET		SSCNET III	SSCNET III/H
Communication media	Metal cable		Optical fiber cable	
Communication speed	5.6Mbps		50Mbps	150Mbps
Transmission distance	Overall length: 30 m	→	[Standard cord inside cabinet/standard cable outside cabinet] Maximum distance between stations: 20 m Maximum overall distance: 320 m (20 m x 16 axes)	
			[Long distance cable] Maximum distance between stations: 50 m Maximum overall distance: 800 m (50 m x 16 axes)	[Long distance cable] Maximum distance between stations: 100 m Maximum overall distance: 1600 m (100 m x 16 axes)

Note. If the first controller communication is connected using SSCNET III/H in the factory setting, the operation mode will be fixed to "J4 mode". If the communication is connected using SSCNET III, the mode will be fixed to "J3 compatibility mode". To return to the factory setting or to select an arbitrary mode, change the setting with the application "MR-J4(W)-B mode selection".
The application "MR-J4(W)-B mode selection" is available with MR Configurator2 Version 1.12N and later. When a version older than 1.12N is used, download an update version from the MITSUBISHI ELECTRIC FA Global Website.

4.4 Comparison of Standard Connection Diagrams

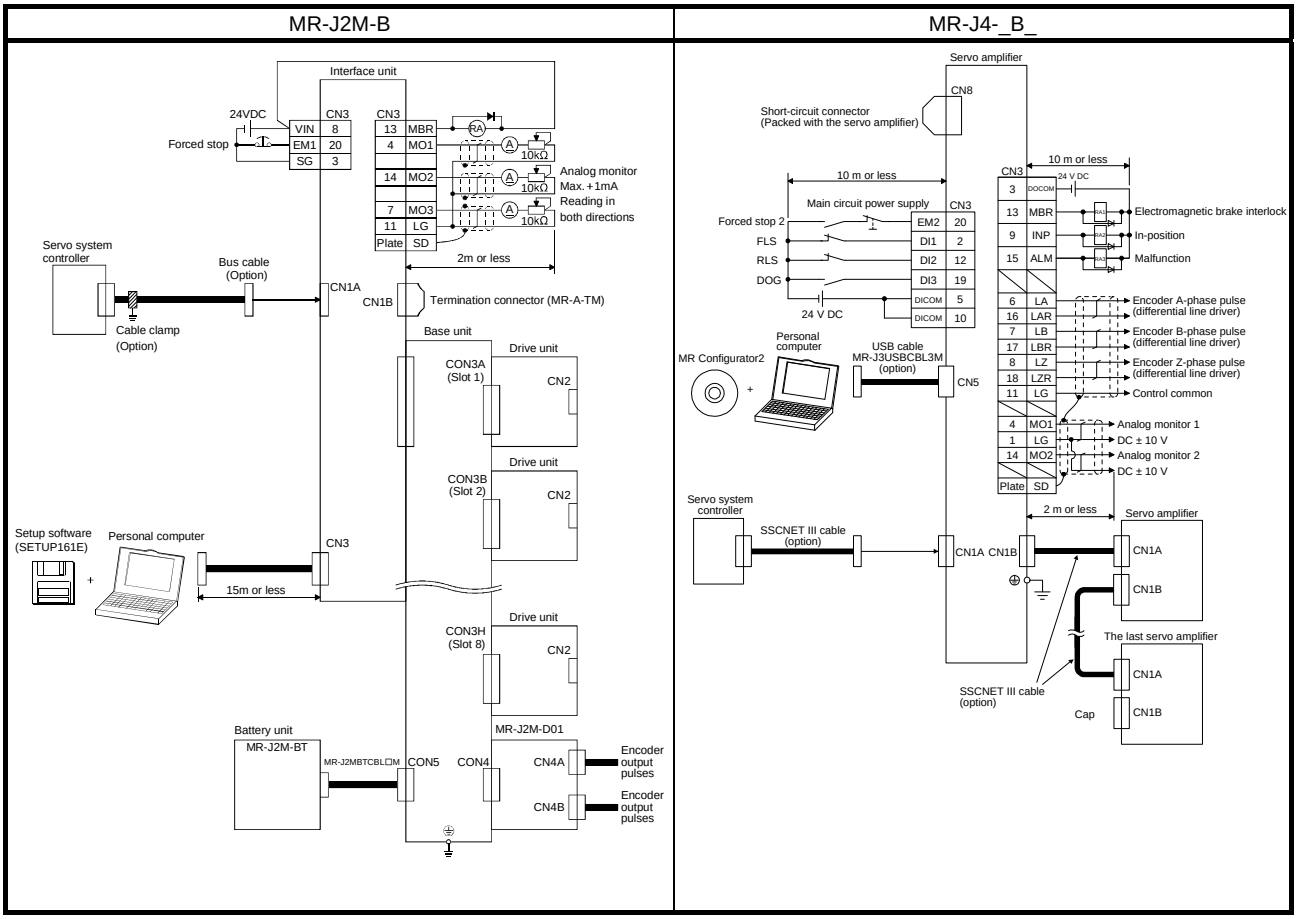

4.5 List of Corresponding Connectors and Terminal Blocks

(1) Connector comparison table

An example of connections with the peripheral equipment is shown below. Refer to the respective Installation Guides and Instruction Manuals for details on signals.

MR-J2M-B	MR-J4-_B_
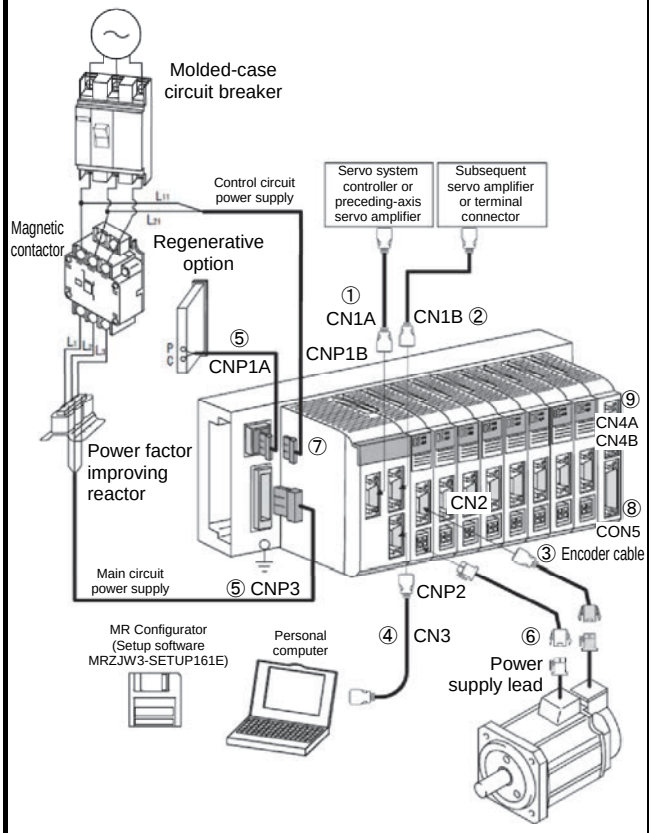	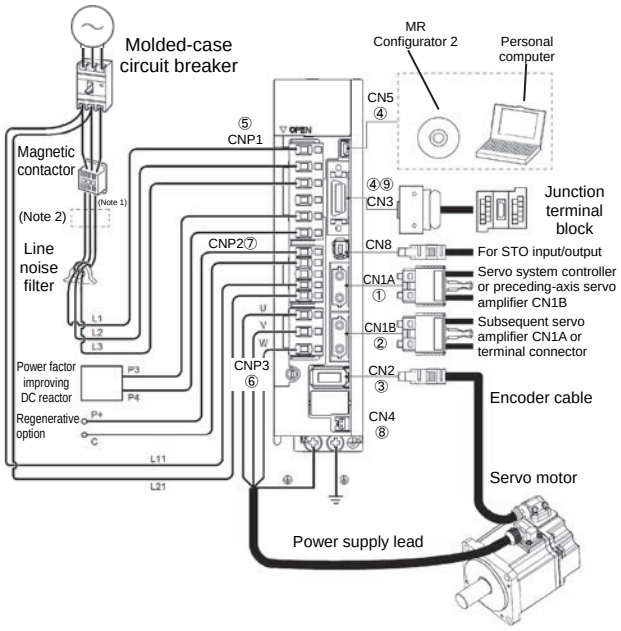

Note 1. The diagram shows an example of MR-J4-200B or less.
2 .The power factor improving AC reactor can also be used. In this case, the power factor improving DC reactor cannot be used.

(2) List of corresponding connectors

	MR-J2M-B			MR-J4-_B_		Note
(1)	Bus cable connector		[CN1A]	SSCNET III cable connector	[CN1A]	Switch to SSCNET III cable (option).
(2)	Bus cable-connecting connector		[CN1B]	SSCNET III cable connector	[CN1B]	Switch to SSCNET III cable (option).
(3)	Encoder connector		[CN2]	Encoder connector	[CN2]	Must switch to encoder cable (option) or prepare a new cable.
(4)	Communication connector [CN3]	PC connection		USB communication connector	[CN5]	Switch to USB cable (option).
		Analog monitor		I/O signal connector	[CN3]	Prepare a new cable.
(5)	Main circuit power connector		[CNP3]	Main circuit power connector	[CNP1]	Switch to the power connector (enclosed with the amplifier).
	Regenerative option connector		[CNP1A]			
(6)	Servo motor power connector		[CNP2]	Servo motor power connector	[CNP3]	
(7)	Control circuit power connector		[CNP1B]	Control circuit power connector	[CNP2]	
(8)	Battery connector		[CON5]	Battery connector	[CN4]	Prepare a new battery.
(9)	Extension I/O unit connectors		[CN4A] [CN4B]	I/O signal connector	[CN3]	Prepare a new cable.

Note. When not using the STO function, attach a short-circuit connector supplied with a servo amplifier onto CN8 (STO input signal connector).

(3) Comparison of signals

MR-J2M-B		Signal symbol	MR-J4-_B_	
Connector pin assignment	Connector pin No.		Connector Pin number	Connector pin assignment
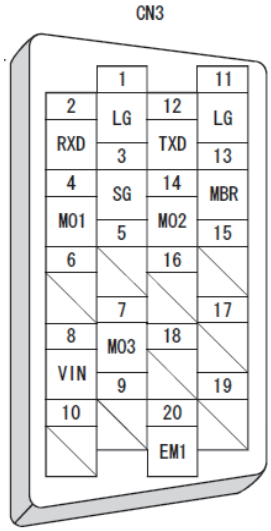	CN3-20	EM1 (EM2)	CN3-20	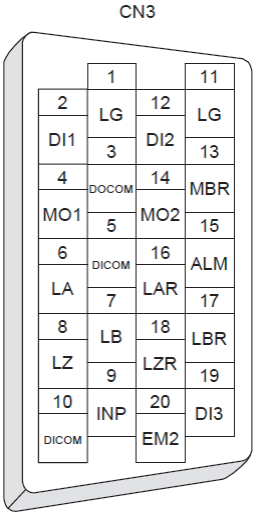
	CN3-13	MBR	CN3-13*	
	CN3-4	MO1	CN3-4	
	CN3-14	MO2	CN3-14	
	CN3-7	MO3	-	
	CN3-8	VIN (DICOM)	CN3-5 CN3-10	
	CN3-3	SG (DOCOM)	CN3-3	
	CN3-1 CN3-11	LG	CN3-1 CN3-11	
	Plate	SD	Plate	

* The following table shows the output device pins and parameters for assigning R-J4-_B_ devices.

Connector pin No.	Parameter	Initial assignment device	I/O division
CN3-13	[Pr. PD07]	MBR	DO-1
CN3-15	[Pr. PD09]	ALM	
CN3-9	[Pr. PD08]	INP	

4.6 Comparison of Peripheral Equipment

POINT
●Refer to "Part 9: Review on Replacement of Optional Peripheral Equipment".

4.7 Comparison of Parameters

The correspondence of the MR-J2M series and MR-J4 series parameter numbers is shown below. Refer to the respective Instruction Manuals for detailed specifications of each parameter.

4.7.1 Parameter comparison list

POINT

- Parameters for manufacturer setting are not described here.
- With MR-J4-_B_, the deceleration to a stop function is enabled in the factory setting. To disable the deceleration to a stop function, set [Pr. PA04] to "0 _ _ _".
- For details, refer to "Part 3: Review on Replacement of MR-J2S-_B_ with MR-J4-_B_".

(1) Interface unit MR-J2M-P8A

MR-J2M-B (Interface unit MR-J2M-P8B)		MR-J4-_B_		Note
No.	Name	No.	Name	
0	Serial communication function selection			No serial communication function.
	Alarm history clear	PC21	Alarm history clear	
1	Serial communication time-out selection			No serial communication function.
2	Serial communication protocol checksum selection			No serial communication function.
3	Analog monitor 1 output	PC09	Analog monitor 1 output	The setting value must be changed according to monitor output data.
4	Analog monitor 2 output	PC10	Analog monitor 2 output	
5	Analog monitor 3 output			
6	Analog monitor output 1 offset	PC11	Analog monitor 1 offset	Depends on hardware. Change the setting value.
7	Analog monitor output 2 offset	PC12	Analog monitor 2 offset	
8	Analog monitor output 3 offset			
9	SSCNET type selection (SSCNET communication cycle)			MR-J4-_B_ is compatible with SSCNET III/H only. The communication cycle depends on the specifications of the controller and the number of connected axes.
10	Electromagnetic brake interlock (MBR) axis No. selection			Assigned to CN3.13
	Test operation selection			The test operation can be set with the control axis setting switch (SW2).
11	1st slot serial communication station number selection			The axis No. can be set with the selection rotary switch (SW1).
12	2nd slot serial communication station number selection			
13	3rd slot serial communication station number selection			
14	4th slot serial communication station number selection			
15	5th slot serial communication station number selection			
16	6th slot serial communication station number selection			
17	7th slot serial communication station number selection			
18	8th slot serial communication station number selection			
19	IFU parameter writing inhibit	PA19	Parameter writing inhibit	Change the setting value as necessary.

(2) Drive unit MR-J2M-_DU

MR-J2M-B (Drive unit MR-J2M-_DU)		MR-J4-_B_		Note
No.	Name	No.	Name	
1	Absolute position detection selection	PA03	Absolute position detection system selection	
2	Regenerative resistor	PA02	Regenerative option selection	The setting must be changed according to option model.
3 to 5	Automatically set from the servo system controller			No corresponding parameter (Setting not required)
6	Feedback pulse number			No corresponding parameter
7	Rotation direction selection	PA14	Rotation direction selection	
8	Auto Tuning	PA08	Auto tuning mode	The setting value needs to be changed according to the auto tuning mode. Some of the settings cannot be set. Gain adjustment mode correspondence table MR-J2M-B / MR-J4-_B_ Interpolation mode / 2 gain adjustment mode 1 Auto tuning mode 1 / Auto tuning mode 1 Auto tuning mode 2 / Auto tuning mode 2 Manual mode 1 / Manual mode 2 / Manual mode
9	Servo response	PA09	Auto tuning response	The setting value must be changed based on machine resonance frequency.
10	Forward rotation torque limit			No corresponding parameter
11	Reverse rotation torque limit			
12	Ratio of load inertia to servo motor inertia (load inertia ratio)	PB06	Load to motor inertia ratio	The unit system is different. (0.1-fold→0.01-fold) Pay attention to setting value.
13	Position loop gain 1.	PB07	Model loop gain	The unit system is different. (rad/s→0.1 rad/s)
14	Speed loop gain 1.			No corresponding parameter (Setting not required)
15	Position loop gain 2.	PB08	Position loop gain	The unit system is different. (rad/s→0.1 rad/s)
16	Speed loop gain 2.	PB09	Speed loop gain	
17	Speed integral compensation.	PB10	Speed integral compensation	The unit system is different. (ms→0.1 ms)
18	Machine resonance suppression filter 1	PB13 PB14	Machine resonance suppression filter 1 Notch shape selection 1	Change the setting value according to the frequency and depth.
19	Feed forward gain	PB04	Feed forward gain	
20	In-position range	PA10	In-position range	Pay attention to the unit system. MR-J2M-B: Set by the feedback pulse unit. MR-J4-_B_: Set per command pulse.
21	Electromagnetic brake sequence output	PC02	Electromagnetic brake sequence output	
22	For manufacturer setting			
23	Encoder cable selection	PC04	Encoder communication method selection	
	Servo forced stop	PA04	Servo forced stop selection	
24	Motor-less operation selection	PC05	Motor-less operation selection	
	Slight vibration suppression control selection	PB24	Slight vibration suppression control	
25	Low-pass filter selection	PB23	Low-pass filter selection	
	Adaptive vibration suppression control selection Adaptive vibration suppression control level selection			No corresponding parameter (Machine resonance filters can be automatically adjusted with PB01.)
30	Zero speed	PC07	Zero speed	
31	Error excessive alarm level	PC01	Error excessive alarm level	J2MB: 0.025 rev. unit J4B: 1/0.1/0.01/0.001 rev. unit selectable
		PC06	Error excessive alarm level unit selection	
32	PI-PID switching control selection	PB24	PI-PID switching control selection	Switching with PI-PID switching position droop is not possible.
33	Encoder output pulse setting selection	PA15	Encoder output pulse	Max. output frequency is different.

MR-J2M-B (Drive unit MR-J2M-_DU)		MR-J4-_B_		Note
No.	Name	No.	Name	
34	PI-PID switching position droop			No corresponding parameter
36	Speed differential compensation	PB11	Speed differential compensation	
38	Encoder output pulses	PA15	Encoder output pulse	Max. output frequency is different.
40	DRU parameter writing inhibit	PA19	Parameter writing inhibit	Change the setting value as necessary.

MEMO

Part 7
Common Reference Material

Part 7: Common Reference Material

1. SPECIFICATION DIFFERENCES

1.1 Detailed Specification/Function Differences

(1) Comparison of MR-J2S series and MR-J4 series (General-purpose interface/SSCNET interface)

Item		MR-J2S-_A_/MR-J2S-_B_	MR-J4-_A_/MR-J4-_B_
1	Capacity range	(100 V class) 0.1 kW to 0.4 kW (200 V class) 0.1 kW to 37 kW (400 V class) 0.6 kW to 55 kW	(100 V class) 0.1 kW to 0.4 kW (200 V class) 0.1 kW to 37 kW (400 V class) 0.6 kW to 55 kW
2	Regenerative resistor	Built-in (0.2 kW to 7 kW) External (11 kW to 22 kW)	Built-in (0.2 kW to 7 kW) External (11 kW to 22 kW)
3	Dynamic brake	Built-in (0.1 kW to 7 kW) External (11 kW to 55 kW)	Built-in (0.1 kW to 7 kW) External (11 kW to 55 kW) **Coasting distance is different.**
4	Control circuit power	(100 V class) 1-phase 100 V AC to 120 V AC (200 V class) 1-phase 200 V AC to 230 V AC (400 V class) 24 V DC (up to 7 kW) 1-phase 380 V AC to 480 V AC (11 kW to 55 kW)	(100 V class) 1-phase 100 V AC to 120 V AC (200 V class) 1-phase 200 V AC to **240 V AC** (400 V class) 1-phase 380 V AC to 480 V AC
5	Main circuit power	(100 V class) 1-phase 100 V AC to 120 V AC (200 V class) 1-phase 230 V AC 3-phase 200 V AC to 230 V AC (up to 750 W) 3-phase 200 V AC to 230 V AC (1 kW to 37 kW) (400 V class) 3-phase 380 V AC to 480 V AC	(100 V class) 1-phase 100 V AC to 120 V AC (200 V class) 1-phase/3-phase 200 V AC to **240 V AC** (up to 750 W) 3-phase 200 V AC to **240 V AC** (1 kW to 37 kW) (400 V class) 3-phase 380 V AC to 480 V AC
6	24 V DC power	Built-in	**External supply required**
7	Auto tuning	Real-time auto tuning: 15 steps	Real-time auto tuning: **40 steps** **One-touch tuning**
8	Control mode	General-purpose interface • Position control mode (pulse command) • Speed control mode (analog command/Internal speed command) • Torque control mode (analog command) SSCNET interface • Position control mode • Speed control mode	General-purpose interface • Position control mode (pulse command) • Speed control mode (analog command/Internal speed command) • Torque control mode (analog command) **SSCNET Ⅲ /H interface** • Position control mode • Speed control mode • **Torque control mode**
9	Maximum input pulses	Differential receiver: 500 kpulse/s Open-collector 200 kpulse/s Command pulse: Sink	Differential receiver: **4 Mpulse/s** Open-collector 200 kpulse/s Command pulse: Sink
10	The number of DIO points (excluding EM1)	General-purpose interface DI: 8 points, DO: 6 points SSCNET interface DI: 0 points; DO:2 points	General-purpose interface **DI: 9 points, DO: 6 points** SSCNET III / H interface **DI: 3 points; DO: 3 points**
11	Encoder pulse output	ABZ-phase (differential line driver), Z-phase (open-collector)	ABZ-phase (differential line driver), Z-phase (open-collector)
12	DIO interface	Input: Sink/source Output: Sink	Input: Sink/source Output: Sink/**source**
13	Analog input/output	General-purpose interface (Input) 2 ch Torque: 10-bit; Speed: 14-bit or equivalent (Output) 10-bit or equivalent × 2 ch SSCNET interface (Output) 10-bit or equivalent × 2 ch	General-purpose interface (Input) 2 ch Torque: 10-bit; Speed: 14-bit or equivalent (Output) 10-bit or equivalent × 2 ch SSCNET III / H interface (Output) 10-bit or equivalent × 2 ch
14	Number of internal speed commands (General-purpose interface)	7 points	7 points
15	Parameter setting method	Setup software (SETUP161E) Push-button (MR-J2S-_A_)	**MR Configurator2** Push-button (MR-J4-_A_)
16	Setup software communication function	RS-232C	**USB**

Item		MR-J2S-_A_/MR-J2S-_B_	MR-J4-_A_/MR-J4-_B_
17	Servo motor (Encoder resolution)	HC-_FS series (17-bit ABS) HA-_FS series (17-bit ABS)	HG series (**22-bit** ABS)
18	Motor maximum torque	HC-KFS 300%	HG-KR **350%** (with a gear reducer: 300%)
		HC-MFS 300%	HG-MR 300%
		HC-SFS 300%	HG-SR 300%
		HA-LFS 250%,300%	HG-JR **300%**
		HC-RFS 250%	HG-RR 250%
		HC-UFS 300%	HG-UR 300%
19	Button (General-purpose interface)	4 buttons	4 buttons
20	LED display	General-purpose interface: 7-segment 5-digit SSCNET interface: 7-segment 2-digit	General-purpose interface: 7-segment 5-digit SSCNET interface: 7-segment **3-digit**
21	Advanced vibration suppression control II	Unprovided	**Provided**
22	Adaptive filter	Provided (Adaptive vibration suppression control)	Provided **(Adaptive filter II with improved functions)**
23	Notch filter	Provided (2 pcs.)	Provided **(5 pcs.)**
24	Tough drive	Unprovided	**Provided**
25	Drive recorder	Unprovided	**Provided**
26	Forced stop	EM1 (DB stop)	**EM1 (DB stop)/EM2 (deceleration stop) optional**
Note	Functions with difference are **shown with shading**.		

(2) Comparison of MR-J2S series and MR-J4 series (Built-in positioning function/program supported)

Item		MR-J2S-_CP_/ MR-J2S-_CL_ (7 kW or less, 100 V/200 V class)	MR-J4-_A_-RJ (7 kW or less, 100 V/200 V class)
1	Capacity range	(100 V class) 0.1 kW to 0.4 kW (200 V class) 0.1 kW to 7 kW	(100 V class) 0.1 kW to 0.4 kW (200 V class) 0.1 kW to 7 kW
2	Internal regenerative resistor	Built-in (0.2 kW to 7 kW)	Built-in (0.2 kW to 7 kW)
3	Dynamic brake	Built-in (0.1 kW to 7 kW)	Built-in (0.1 kW to 7 kW) **Coasting distance may be different. (Note)**
4	Control circuit power	(100 V Class) 1-phase 100 V AC to 120 V AC (200 V Class) 1-phase 200 V AC to 230 V AC	(100 V Class) 1-phase 100 V AC to 120 V AC (200 V Class) 1-phase 200 V AC to **240 V AC**
5	Main circuit power	(100 V Class) 1-phase 100 V AC to 120 V AC (200 V Class) 1-phase 230 V AC/3-phase 200 V AC to 230 V AC (to 750 W) 3-phase 200 V AC to 230 V AC (1 kW to 7 kW)	(100 V Class) 1-phase 100 V AC to 120 V AC (200 V Class) 1-phase /3-phase 200 V AC to **240 V AC** (to 750 W) 3-phase 200 V AC to **240 V AC** (1 W to 7 kW)
6	24 V DC power	Built-in	**External supply required**
7	Auto tuning	Real-time auto tuning: 15 steps	Real-time auto tuning: **40 steps** **One-touch tuning**
8	Control mode	(MR-J2S-_CP_) Built-in positioning function (MR-J2S-_CL_) Built-in program operation function	Built-in positioning function Built-in program operation function **Position control mode (pulse command)** **Speed control mode (analog command)** **Torque control mode (analog command)**
9	Manual pulse generator maximum input pulse	Open collector 200 kpulses/s	Open collector 200 kpulses/s
10	The number of DIO points (excluding EM1)	DI: 8 points, DO: 5 points, DI/DO combination: 1 point	**DI: 11 points, DO: 8 points**
11	Encoder pulse output	ABZ-phase (differential line driver), Z-phase (open-collector)	ABZ-phase (differential line driver), Z-phase (open-collector)
12	DIO interface	Input: Sink/source Output: Sink	Input: Sink/source Output: Sink/source
13	Analog input/output	(Input) 2 ch 10-bit torque limit, 10-bit override (Output) 10-bit or equivalent x 2 ch	(Input) 2 ch 10-bit torque limit, 10-bit override or equivalent (Output) 10-bit or equivalent x 2 ch
14	The number of internal speed commands	7 points	7 points
15	Parameter setting method	Setup software (SETUP161E) Push-button	**MR Configurator2** Push-button **parameter unit**
16	Setup software communication	RS-232C	USB
17	Servo motor (Encoder resolution)	HC_FS series (17-bit ABS) HA_FS series (17-bit ABS)	**HG series (22-bit ABS)**
18	Motor maximum torque	HC-KFS 300%	HG-KR **350%** (with a gear reducer: 300%)
		HC-MFS 300%	HG-MR 300%
		HC-SFS 300%	HG-SR 300%
		HA-LFS 250%, 300%	HG-JR **300%**
		HC-RFS 250%	HG-RR 250%
		HC-UFS 300%	HG-UR 300%
19	Button	4 buttons	4 buttons
20	LED display	7-segment 5-digit	7-segment 5-digit
21	Advanced vibration suppression control	Unprovided	**Provided**
22	Adaptive filter	Provided (Adaptive vibration suppression control)	Provided **(Adaptive filter II with improved functions)**
23	Notch filter	Provided (2 pcs.)	Provided (**5** pcs.)
24	Tough drive	Unprovided	**Provided**
25	Drive recorder	Unprovided	Provided
26	Forced stop	EM1 (DB stop)	EM1 (DB stop)/**EM2 (deceleration stop) optional**
27	Point table No.	(MR-J2S-_CP_) up to 31	**up to 255**
28	Program No.	(MR-J2S-_CL_) up to 16 programs (120 steps)	**up to 256 programs (640 steps)**
29	Position data unit	mm	mm/**degree/inch/pulse**
Note	Functions with difference are **shown with shading**.		

Note. For the coasting distance, refer to "1.2.3 Dynamic brake: coasting distance".

(3) Comparison of MR-J2M series and MR-J4 series (General-purpose interface / SSCNET interface)

Item		MR-J2M-A/ MR-J2M-B	MR-J4-_A_/ MR-J4-_B_
1	Capacity range (to 0.75 kW / 200 V)	0.1 to 0.75 kW / 200 V	0.1 to 0.75 kW / 200 V
2	Regenerative resistor	External option	Built-in (200 W or more)
3	Dynamic brake	Built-in	Built-in **(Coasting distance is different.)**
4	Control circuit power	1-phase 200 V AC to 230 V AC	1-phase 200 V AC to **240 V AC**
5	Main circuit power	1-phase/3-phase 200 V AC to 230 V AC 3-phase 200 V AC to 230 V AC	1-phase/3-phase 200 V AC to **240 V AC** 3-phase 200 V AC to **240 V AC**
6	24 V DC power	External supply required	External supply required
7	Auto tuning	Real-time auto tuning:15 steps	Real-time auto tuning: **40 steps** **One-touch tuning**
8	Control mode	General-purpose interface • Position control mode (pulse command) SSCNET interface • Position control mode	General-purpose interface • Position control mode (pulse command) • Speed control mode (analog command) • Torque control mode (analog command) **SSCNET III/H-interface** • Position control mode • Speed control mode • **Torque control mode**
9	Maximum input pulses	Differential pulse 500 kpulses/s Open-collector 200 kpulses/s Command pulse: Sink	Differential pulse **4 Mpulses/s** Open-collector 200 kpulses/s Command pulse: Sink
10	The number of DIO points (excluding EM1)	General-purpose interface DI: 5 points × 8 axes; DO: 2 points × 8 axes SSCNET interface DI: 0 points; DO:0 points * When an extension I/O unit is used, DI: 32 points; DO: 8 points are added.	General-purpose interface **DI: 9 points, DO: 6 points** SSCNET III / H interface **DI: 3 points; DO: 3 points**
11	Encoder pulse output	ABZ-phase (differential line driver) General-purpose interface Z-phase (open collector)	ABZ-phase (differential line driver) General-purpose interface Z-phase (open collector)
12	DIO interface	Input: Sink Output: Sink	Input: Sink**/source** Output: Sink**/source**
13	Analog input/output	General-purpose interface (Input) Unprovided (Output) 10-bit or equivalent × 3 ch SSCNET interface (Output) 10-bit or equivalent × 3 ch	General-purpose interface (Input) 2 ch Torque: 10-bit; Speed: 14-bit or equivalent (Output) 10-bit or equivalent × 2 ch SSCNET III / H interface (Output) 10-bit or equivalent × 2 ch
14	The number of internal speed commands	(MR-J2M-A) 0 points	(MR-J4-_A_) 7 points
15	Parameter setting method	MR Configurator (SETUP161E) Push-button	**MR Configurator2** Push-button (MR-J4-_A_)
16	Setup software communication function	RS-232C	**USB**
17	Servo motor (Encoder resolution)	HC_FS series (17-bit ABS)	HG series (**22-bit** ABS)
18	Motor maximum torque	HC-KFS 300% HC-MFS 300% HC-UFS 300%	HG-KR **350%** (with a gear reducer: 300%) HG-MR 300% HG-UR 300%
19	Button	(MR-J2M-A) 4 buttons	(MR-J4-_A_) 4 buttons
20	LED display	(MR-J2M-A) 7-segment 5-digit (MR-J2M-B) 7-segment 5-digit	(MR-J4-_A_) 7-segment 5-digit (MR-J4-_B_) 7-segment **3-digit**
21	Advanced vibration suppression control II	Unprovided	**Provided**
22	Adaptive filter	Provided (I)	Provided (**II function upgrading**)
23	Notch filter	Provided (2 pcs.)	Provided (**5 pcs.**)
24	Tough drive	Unprovided	**Provided**
25	Drive recorder	Unprovided	**Provided**
26	Forced stop	EM1 (DB stop)	Select EM1 (DB stop) or **EM2 (deceleration to a stop)**
Note	Functions with difference are **shown with shading**.		

1.2 Servo amplifier

If using the existing cables and servo motor, refer to "[Appendix 2] Introduction to Renewal Tool".

1.2.1 Main circuit terminal block

Series	Main circuit terminal block	Series	Main circuit terminal block
MR-J2S-10_ to MR-J2S-60_	TE1 • For 3-phase 200 V AC to 230 V AC or 1-phase 230 V AC L1 L2 L3 U V W Terminal screw: M4 Tightening torque: 1.2 [N•m] TE2 ← Front side D C P L21 L11 PE terminal Terminal screw: M4 Tightening torque: 1.2 [N•m]	MR-J4-10_(-RJ) to MR-J4-60_(-RJ)	CNP1 L1 L2 L3 N- P3 P4 CNP2 P+ C D L11 L21 CNP3 U V W PE Screw size: M4 Tightening torque: 1.2 [N•m]
MR-J2S-70_, MR-J2S-100_	TE1 L1 L2 L3 U V W Terminal screw: M4 Tightening torque: 1.2 [N•m] TE2 ← Front side D C P L21 L11 N PE terminal Terminal screw: M4 Tightening torque: 1.2 [N•m]	MR-J4-70_(-RJ), MR-J4-100_(-RJ)	CNP1 L1 L2 L3 N- P3 P4 CNP2 P+ C D L11 L21 CNP3 U V W PE Screw size: M4 Tightening torque: 1.2 [N•m]
MR-J2S-200_, MR-J2S-350_	TE1 L1 L2 L3 U V W Terminal screw: M4 Tightening torque: 1.2 [N•m] PE terminal Terminal screw: M4 Tightening torque: 1.2 [N•m] TE2 L11 L21 D P C N Terminal screw: M4 Tightening torque: 1.2 [N•m]	MR-J4-200_(-RJ), MR-J4-350_(-RJ)	CNP1 L1 L2 L3 N- P3 P4 CNP2 P+ C D L11 L21 CNP3 U V W PE Screw size: M4 Tightening torque: 1.2 [N•m]
MR-J2S-500_	TE1 L1 L2 L3 C P N U V W Terminal screw: M4 Tightening torque: 1.2 [N•m] PE terminal Built-in regenerative resistor Screw for securing lead terminal Terminal screw: M4 Tightening torque: 1.2 [N•m] TE2 L11 L21 Terminal screw: M3.5 Tightening torque: 0.8 [N•m]	MR-J4-500_(-RJ)	TE2 L11 L21 TE2 Screw size: M3.5 Tightening torque: 0.8 [N•m] TE1 L1 L2 L3 N- TE1 Screw size: M4 Tightening torque: 1.2 [N•m] TE3 P3 P4 P+ C TE3 Screw size: M4 Tightening torque: 1.2 [N•m] TE4 D U V W TE4 Screw size: M4 Tightening torque: 1.2 [N•m] PE PE Screw size: M4 Tightening torque: 1.2 [N•m]
MR-J2S-700_	TE1 L1 L2 L3 C P N U V W Terminal screw: M4 Tightening torque: 1.2 [N•m] PE terminal Built-in regenerative resistor Screw for securing lead terminal Terminal screw: M4 Tightening torque: 1.2 [N•m] TE2 L11 L21 Terminal screw: M3.5 Tightening torque: 0.8 [N•m]	MR-J4-700_(-RJ)	TE3 N- P3 P4 TE1 L1 L2 L3 P+ C U V W TE2 L11 L21 PE TE3 Screw size: M4 Tightening torque: 1.2 [N•m] TE1 Screw size: M4 Tightening torque: 1.2 [N•m] TE2 Screw size: M3.5 Tightening torque: 0.8 [N•m] PE Screw size: M4 Tightening torque: 1.2 [N•m]

Series	Main circuit terminal block	Series	Main circuit terminal block
MR-J2S-11K_, MR-J2S-15K_	TE1 L1 L2 L3 U V W P1 P C N Terminal screw: M6 Tightening torque: 3.0 [N•m] PE terminal Terminal screw: M6 Tightening torque: 6.0 [N•m] TE2 L11 L21 Terminal screw: M4 Tightening torque: 1.2 [N•m]	MR-J4-11K_(-RJ), MR-J4-15K_(-RJ)	TE1-1 L1 L2 L3 U V W TE1-2 P3 P4 P+ C N- TE2 L11 L21 PE TE1-1 Screw size: M6 Tightening torque: 3.0 [N•m] TE1-2 Screw size: M6 Tightening torque: 3.0 [N•m] TE2 Screw size: M4 Tightening torque: 1.2 [N•m] PE Screw size: M6 Tightening torque: 3.0 [N•m]
MR-J2S-22K_	TE1 L1 L2 L3 U V W P1 P C N Terminal screw: M8 Tightening torque: 6.0 [N•m] PE terminal Terminal screw: M8 Tightening torque: 6.0 [N•m] TE2 L11 L21 Terminal screw: M4 Tightening torque: 1.2 [N•m]	MR-J4-22K_(-RJ)	TE1-1 L1 L2 L3 U V W TE1-2 P3 P4 P+ C N- PE TE2 L11 L21 TE1-1 Screw size: M8 Tightening torque: 6.0 [N•m TE1-2 Screw size: M8 Tightening torque: 6.0 [N•m TE2 Screw size: M4 Tightening torque: 1.2 [N•m PE Screw size: M8 Tightening torque: 6.0 [N•m
MR-J2S-30K_, MR-J2S-37K_	TE1 U V W Terminal screw: M10 Tightening torque: 12.0 [N•m] TE3 L11 L21 Terminal screw: M3 Tightening torque: 0.5 to 0.6 [N•m] TE2-1 TE2-2 P N Terminal screw: M10 Tightening torque: 12.0 [N•m] Terminal screw: M10 Tightening torque: 12.0 [N•m]	MR-J4-DU30K_, MR-J4-DU37K_	TE2-1 L+ L- TE2-2 L+ L- TE3 L11 L21 PE TE1 U V W TE1 Screw size: M10 Tightening torque: 12.0 [N•m] TE2-1 Screw size: M6 Tightening torque: 3.0 [N•m] TE2-2 Screw size: M6 Tightening torque: 3.0 [N•m] TE3 Screw size: M4 Tightening torque: 1.2 [N•m] PE Screw size: M10 Tightening torque: 12.0 [N•m]
MR-J2S-60_4 to MR-J2S-200_4	CNP1 L1 L2 L3 CNP2 P C D N CNP3 U V W PE terminal Terminal screw: M4 Tightening torque: 1.2 [N•m] CN4 24V • L11 0V • L21	MR-J4-60_4(-RJ) to MR-J4-200_4(-RJ)	CNP1 N- L1 L2 L3 P3 P4 CNP2 P+ C D L11 L21 CNP3 U V W PE Screw size: M4 Tightening torque: 1.2 [N•m]
MR-J2S-350_4	TE1 L1 L2 L3 C P N U V W Terminal screw: M4 Tightening torque: 1.2 [N•m] PE terminal Built-in regenerative resistor Screw for securing lead terminal Terminal screw: M4 Tightening torque: 1.2 [N•m] TE2 24V • L11 0V • L21 Terminal screw: M3.5 Tightening torque: 1.0 [N•m]	MR-J4-350_4(-RJ)	CNP1 N- L1 L2 L3 P3 P4 CNP2 P+ C D L11 L21 CNP3 U V W PE Screw size: M4 Tightening torque: 1.2 [N•m]

Series	Main circuit terminal block	Series	Main circuit terminal block
MR-J2S-500_4	TE1 L1 L2 L3 C P N U V W Terminal screw: M4 Tightening torque: 1.2 [N•m] PE terminal Built-in regenerative resistor Screw for securing lead terminal Terminal screw: M4 Tightening torque: 1.2 [N•m] TE2 24V • L11 0V • L21 Terminal screw: M3.5 Tightening torque: 1.0 [N•m]	MR-J4-500_4(-RJ)	TE2 L11 L21 TE3 N- P3 P4 TE1 L1 L2 L3 P+ C U V W PE TE2 Screw size: M3.5 Tightening torque: 0.8 [N•m] TE3 Screw size: M4 Tightening torque: 1.2 [N•m] TE1 Screw size: M4 Tightening torque: 1.2 [N•m] PE Screw size: M4 Tightening torque: 1.2 [N•m]
MR-J2S-700_4	TE1 L1 L2 L3 C P N U V W Terminal screw: M4 Tightening torque: 1.2 [N•m] PE terminal Built-in regenerative resistor Screw for securing lead terminal Terminal screw: M4 Tightening torque: 1.2 [N•m] TE2 L11 L21 Terminal screw: M3.5 Tightening torque: 0.8 [N•m]	MR-J4-700_4(-RJ)	TE3 N- P3 P4 TE1 L1 L2 L3 P+ C U V W TE2 L11 L21 PE TE3 Screw size: M4 Tightening torque: 1.2 [N•m] TE1 Screw size: M4 Tightening torque: 1.2 [N•m] TE2 Screw size: M3.5 Tightening torque: 0.8 [N•m] PE Screw size: M4 Tightening torque: 1.2 [N•m]
MR-J2S-11K_4, MR-J2S-15K_4	TE1 L1 L2 L3 U V W P1 P C N Terminal screw: M6 Tightening torque: 3.0 [N•m] PE terminal Terminal screw: M6 Tightening torque: 6.0 [N•m] TE2 L11 L21 Terminal screw: M4 Tightening torque: 1.2 [N•m]	MR-J4-11K_4(-RJ), MR-J4-15K_4(-RJ)	TE1-1 L1 L2 L3 U V W TE1-2 P3 P4 P+ C N- TE2 L11 L21 PE TE1-1 Screw size: M6 Tightening torque: 3.0 [N•m] TE1-2 Screw size: M6 Tightening torque: 3.0 [N•m] TE2 Screw size: M4 Tightening torque: 1.2 [N•m] PE Screw size: M6 Tightening torque: 3.0 [N•m]
MR-J2S-22K_4	TE1 L1 L2 L3 U V W P1 P C N Terminal screw: M8 Tightening torque: 6.0 [N•m] PE terminal Terminal screw: M8 Tightening torque: 6.0 [N•m] TE2 L11 L21 Terminal screw: M4 Tightening torque: 1.2 [N•m]	MR-J4-22K_4(-RJ)	TE1-1 L1 L2 L3 U V W TE1-2 P3 P4 P+ C N- PE TE2 L11 L21 TE1-1 Screw size: M8 Tightening torque: 6.0 [N•m] TE1-2 Screw size: M8 Tightening torque: 6.0 [N•m] TE2 Screw size: M4 Tightening torque: 1.2 [N•m] PE Screw size: M8 Tightening torque: 6.0 [N•m]
MR-J2S-30K_4, MR-J2S-37K_4	TE1 U V W Terminal screw: M10 Tightening torque: 12.0 [N•m] TE3 L11 L21 Terminal screw: M3 Tightening torque: 0.5 to 0.6 [N•m] TE2-1 TE2-2 P N Terminal screw: M10 Tightening torque: 12.0 [N•m] Terminal screw: M10 Tightening torque: 12.0 [N•m]	MR-J4-DU30K_4, MR-J4-DU37K_4	TE2 TE3 L+ L11 L- L21 PE TE1 U V W TE1 Screw size: M8 Tightening torque: 6.0 [N•m] TE2 Screw size: M6 Tightening torque: 3.0 [N•m] TE3 Screw size: M4 Tightening torque: 1.2 [N•m] PE Screw size: M8 Tightening torque: 6.0 [N•m]
MR-J2S-45K_4, MR-J2S-55K_4	TE1 U V W Terminal screw: M10 Tightening torque: 12.0 [N•m] TE3 L11 L21 Terminal screw: M3 Tightening torque: 0.5 to 0.6 [N•m] TE2-1 TE2-2 P N Terminal screw: M10 Tightening torque: 12.0 [N•m] Terminal screw: M10 Tightening torque: 12.0 [N•m]	MR-J4-DU45K_4, MR-J4-DU55K_4	TE2-1 TE2-2 L+ L+ L- L- TE3 L11 L21 PE TE1 U V W TE1 Screw size: M10 Tightening torque: 12.0 [N•m] TE2-1 Screw size: M6 Tightening torque: 3.0 [N•m] TE2-2 Screw size: M6 Tightening torque: 3.0 [N•m] TE3 Screw size: M4 Tightening torque: 1.2 [N•m] PE Screw size: M10 Tightening torque: 12.0 [N•m]

Series	Main circuit terminal block	Series	Main circuit terminal block
MR-HP30KA, MR-HP55KA4	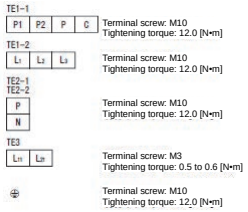	MR-CR55K, MR-CR55K4	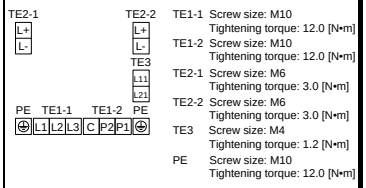
MR-J2S-10_1 to MR-J2S-40_1	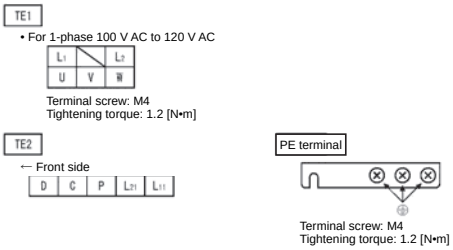	MR-J4-10_1(-RJ) to MR-J4-40_1(-RJ)	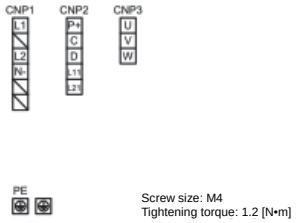

1.2.2 Comparison of encoder signals (CN2)

MR-J2S series		Signal symbol (Note 1)	MR-J4 series	
Connector pin assignment	Connector pin No.		Connector pin No.	Connector pin assignment
CN2 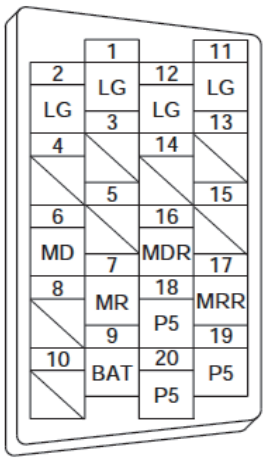	CN2-1 CN2-2 CN2-11 CN2-12	LG	CN2-2	CN2 (Note 2) 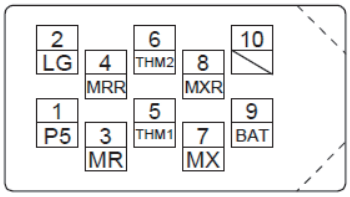
	CN2-6	MD (MX)	CN2-7	
	CN2-7	MR	CN2-3	
	CN2-9	BAT	CN2-9	
	CN2-16	MDR (MXR)	CN2-8	
	CN2-17	MRR	CN2-4	
	CN2-18 CN2-19 CN2-20	P5	CN2-1	

Note 1. Signal abbreviations in parentheses are for MR-J4 series.
2. For the HC-_FS /HA-_FS motor, THM1 and THM2 are not used.

1.2.3 Dynamic brake: coasting distance

(1) Dynamic brake time constant

Series	Dynamic brake time constant	Series	Dynamic brake time constant
HC-KFS	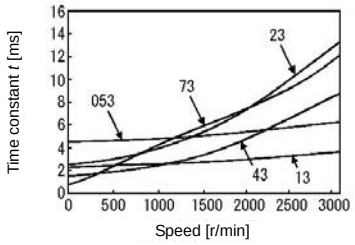	HG-KR	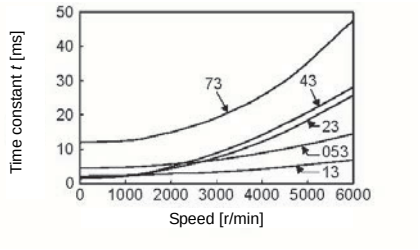
HC-MFS	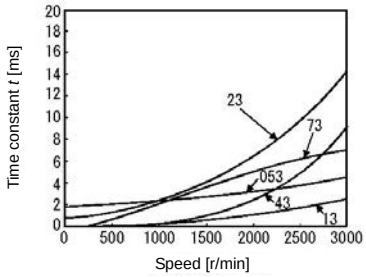	HG-MR	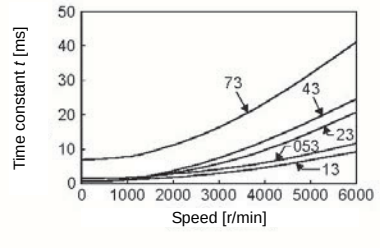
HC-UFS 2000 r/min	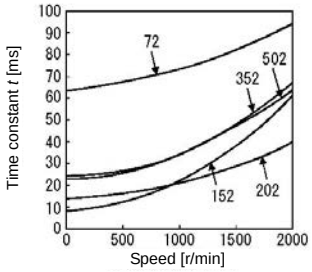	HG-UR	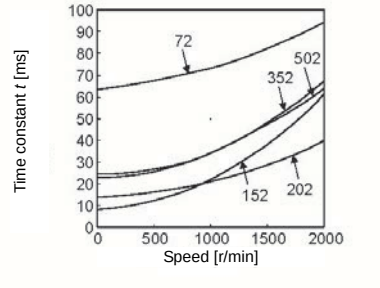
HC-UFS 3000 r/min	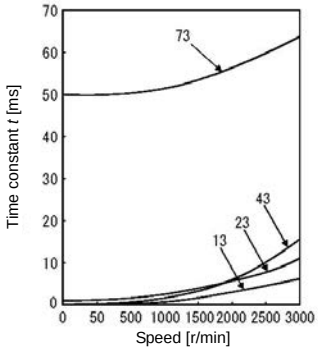	HG-KR	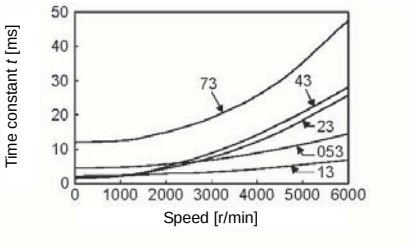
HC-SFS 1000 r/min	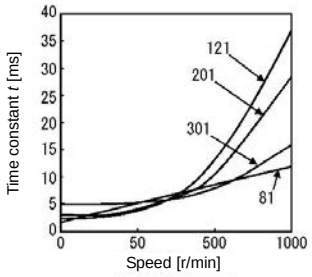	HG-SR 1000 r/min	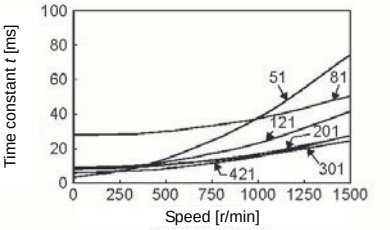

Series	Dynamic brake time constant	Series	Dynamic brake time constant
HC-SFS 2000 r/min	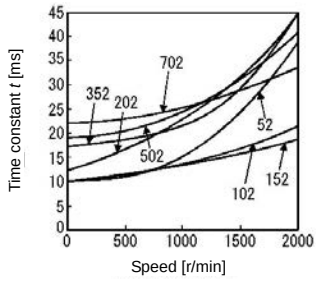	HG-SR 2000 r/min	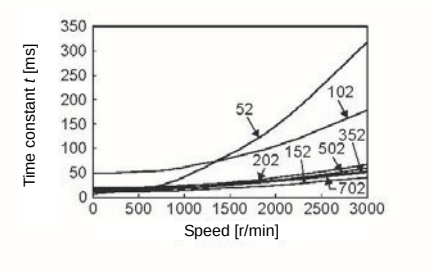
HC-SFS 3000 r/min	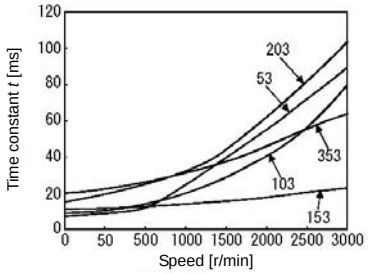	HG-SR 2000 r/min	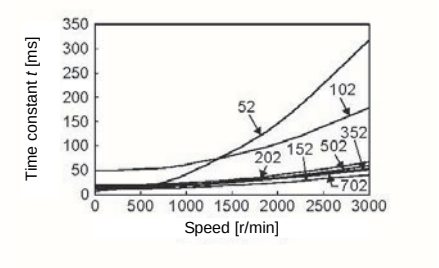
HC-SFS 400 V	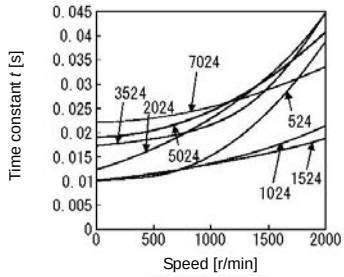	HG-SR 400 V	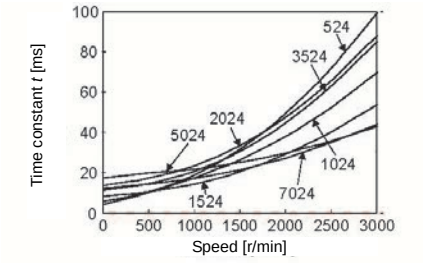
HC-LFS	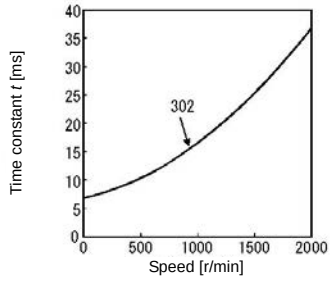	HG-JR 3000 r/min	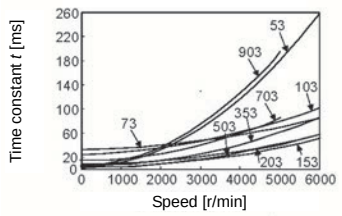
HC-RFS	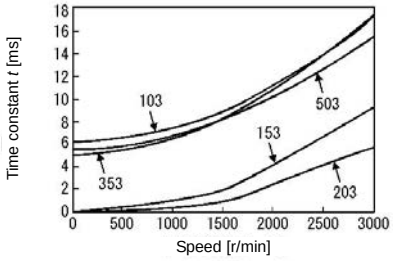	HG-RR	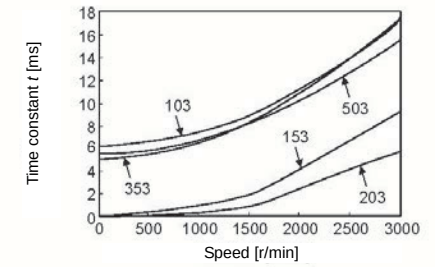

Series	Dynamic brake time constant	Series	Dynamic brake time constant
HA-LFS 200 V 2000 r/min	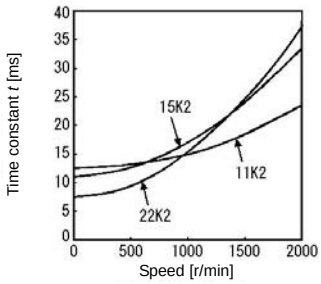	HG-JR 200 V 1500 r/min 3000 r/min	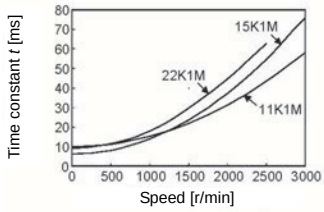 HG-JR, HA-JR1500 r/min series 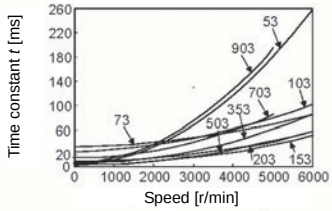 HG-JR, HA-JR3000 r/min series
HA-LFS 400 V 1500 r/min	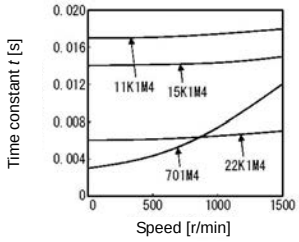	HG-JR 400 V 1500 r/min	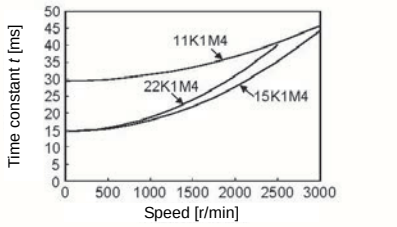
HA-LFS 400 V 2000 r/min	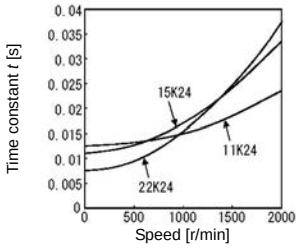	HG-JR 400 V 3000 r/min	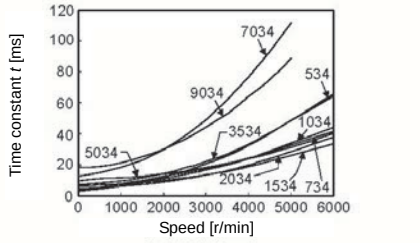

Series	Dynamic brake time constant	Series	Dynamic brake time constant
HA-LFS 200 V Large capacity 2000 r/min	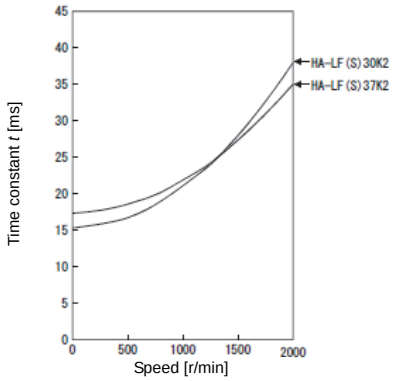	HG-JR 200 V Large capacity	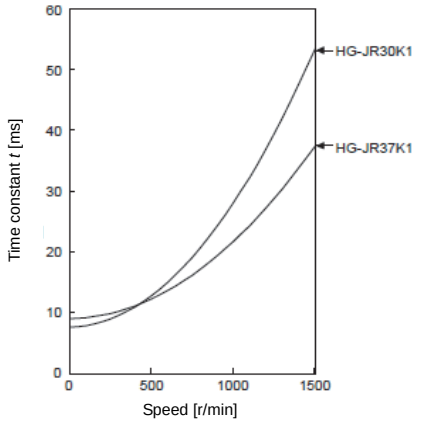 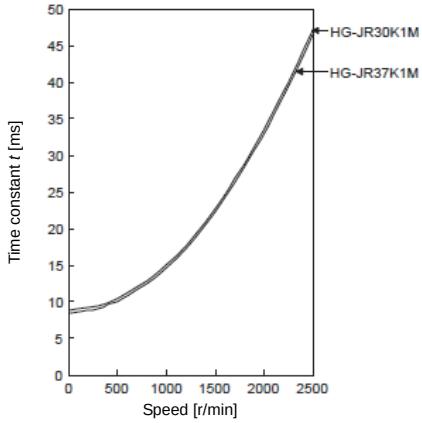
HA-LFS 400 V Large capacity 2000 r/min	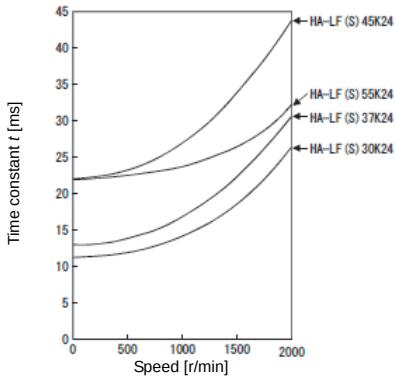	HG-JR 400 V Large capacity	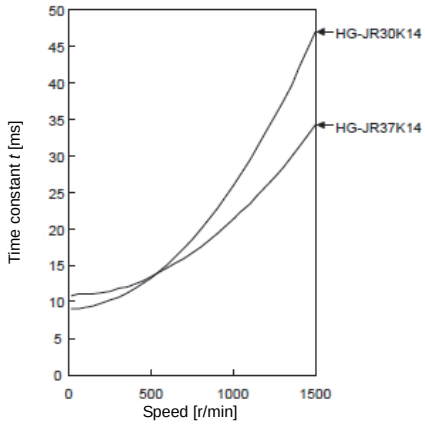 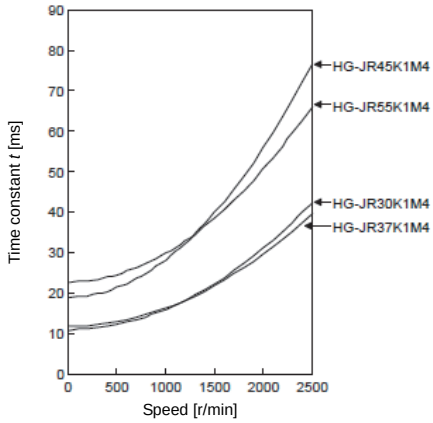

(2) Calculation of coasting distance

The figure shows the pattern in which the servo motor comes to a stop when the dynamic brake is operated. Use equation 7.1 to calculate an approximate coasting distance to a stop. The dynamic brake time constant τ varies with the servo motor and machine operation speeds. (Refer to (1) of this section.) A working part generally has a friction force. Therefore, actual coasting distance will be shorter than a maximum coasting distance calculated with the following equation.

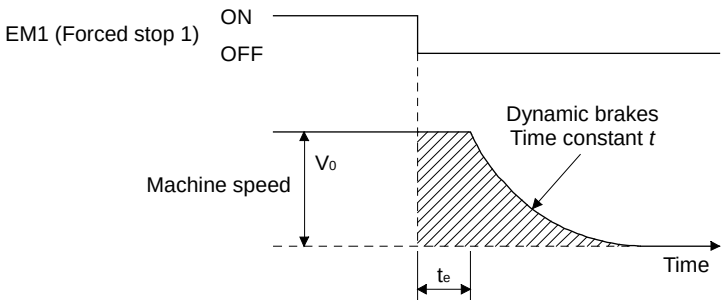

Dynamic Brake Operation Diagram

$$L_{max} = \frac{V_0}{60} \times \left\{ t_e + \tau \left(1 + \frac{J_L}{J_M} \right) \right\} \quad \cdots\cdots (7.1)$$

L_{max} : Maximum coasting distance ..... [mm]

V_0 : Machine's fast feed speed ..... [mm/min]

J_M : Moment of inertia of the servo motor ..... [$\times 10^{-4}$kg•m^2]

J_L : Load moment of inertia converted into equivalent value on servo motor shaft ..... [$\times 10^{-4}$kg•m^2]

τ : Dynamic brake time constant ..... [s]

t_e : Delay time of control section..... [s]

For 7 kW or lower servo, there is internal relay delay time of about 10 ms. For 11 kW to 55 kW servo, there is delay caused by magnetic contactor built into the external dynamic brake (about 50 ms) and delay caused by the external relay.

(3) Electronic dynamic brake

The electronic dynamic brake operates in the initial state for HG series servo motors with a 500 W or smaller capacity.

The time constant "τ" for the electronic dynamic brake will be shorter than that for normal dynamic brake. Therefore, coasting distance will be shorter than in normal dynamic brake.

Series	Servo motor
HG-KR	HG-KR053, HG-KR13, HG-KR23, HG-KR43
HG-MR	HG-MR053, HG-MR13, HG-MR23, HG-MR43
HG-SR	HG-SR51, HG-SR52

Parameter settings (for MR-J4-_A_series)

<table>
<tr><th>No.</th><th>Abbreviation</th><th>Name and function</th><th>Initial value [unit]</th><th>Setting range</th></tr>
<tr><td>PF09</td><td>*FOP5</td><td>Function selection F-5
<table>
<tr><th>Setting digit</th><th>Explanation</th><th>Initial value</th></tr>
<tr><td>_ _ _ x</td><td>Electronic dynamic brake selection.
0: Automatic (effective only for specific servo motors)
2: Disabled
Refer to the following table for the specified servo motors.
<table>
<tr><th>Series</th><th>Servo motor</th></tr>
<tr><td>HG-KR</td><td>HG-KR053, HG-KR13, HG-KR23, HG-KR43</td></tr>
<tr><td>HG-MR</td><td>HG-MR053, HG-MR13, HG-MR23, HG-MR43</td></tr>
<tr><td>HG-SR</td><td>HG-SR51, HG-SR52</td></tr>
</table></td><td>0h</td></tr>
</table></td><td colspan="2">Refer to Name and function column.</td></tr>
<tr><td>PF15</td><td>DBT</td><td>Electronic Dynamic Brake Operating Time
Set an operating time for the electronic dynamic brake.</td><td>2000 [ms]</td><td>0 to 10000</td></tr>
</table>

Parameter settings (for MR-J4-_B_series)

<table>
<tr><th>No.</th><th>Abbreviation</th><th>Name and function</th><th>Initial value [unit]</th><th>Setting range</th></tr>
<tr><td>PF06</td><td>*FOP5</td><td>Function selection F-5
<table>
<tr><th>Setting digit</th><th>Explanation</th><th>Initial value</th></tr>
<tr><td>_ _ _ x</td><td>Electronic dynamic brake selection.
0: Automatic (effective only for specific servo motors)
2: Disabled
Refer to the following table for the specified servo motors.
<table>
<tr><th>Series</th><th>Servo motor</th></tr>
<tr><td>HG-KR</td><td>HG-KR053, HG-KR13, HG-KR23, HG-KR43</td></tr>
<tr><td>HG-MR</td><td>HG-MR053, HG-MR13, HG-MR23, HG-MR43</td></tr>
<tr><td>HG-SR</td><td>HG-SR51, HG-SR52</td></tr>
</table></td><td>0h</td></tr>
</table></td><td colspan="2">Refer to Name and function column.</td></tr>
<tr><td>PF12</td><td>DBT</td><td>Electronic Dynamic Brake Operating Time
Set an operating time for the electronic dynamic brake. (Note)</td><td>2000 [ms]</td><td>0 to 10000</td></tr>
</table>

Note. When the electronic dynamic brake is released during operation, the servo system cannot be switched on until [Pr. PF12] operating time is over.

1.2.4 Forced stop deceleration function selection

(1) Parameter setting (for MR-J4-_A_series)

POINT
●With MR-J4-_A_, the deceleration to a stop function is enabled by the factory setting. To disable the deceleration to a stop function, set [Pr. PA04] to "0 _ _ _".

<table>
<tr><th>Number</th><th>Abbrevi-ation</th><th>Name and function</th><th>Initial value [unit]</th><th>Setting range</th></tr>
<tr><td>PA04</td><td>*AOP1</td><td>Function selection A-1
This is used to select the forced stop input and forced stop deceleration function.
<table>
<tr><th>Setting digit</th><th>Explanation</th><th>Initial value</th></tr>
<tr><td>_ _ _ x</td><td rowspan="3">For manufacturer setting</td><td>0h</td></tr>
<tr><td>_ _ x _</td><td>0h</td></tr>
<tr><td>_ x _ _</td><td>0h</td></tr>
<tr><td>x _ _ _</td><td>Forced stop deceleration function selection
0: Forced stop deceleration function disabled (EM1)
2: Forced stop deceleration function enabled (EM2)
Refer to the following table for details.</td><td>2h</td></tr>
</table>
<table>
<tr><th rowspan="2">Setting value</th><th rowspan="2">EM2/EM1 selection</th><th colspan="2">Deceleration method</th></tr>
<tr><th>EM2 or EM1 is off</th><th>Alarm occurred</th></tr>
<tr><td>0 _ _ _</td><td>EM1</td><td>MBR (Electromagnetic brake interlock) turns off without the forced stop deceleration.</td><td>MBR (Electromagnetic brake interlock) turns off without the forced stop deceleration.</td></tr>
<tr><td>2 _ _ _</td><td>EM2</td><td>MBR (Electromagnetic brake interlock) turns off after the forced stop deceleration.</td><td>MBR (Electromagnetic brake interlock) turns off after the forced stop deceleration.</td></tr>
</table></td><td colspan="2">Refer to Name and function column.</td></tr>
</table>

(2) Parameter setting (for MR-J4-_B_series)

POINT
●With MR-J4-_B_, the deceleration to a stop function is enabled in the factory setting. To disable the deceleration to a stop function, set [Pr. PA04] to "0 _ _ _".

<table>
<tr><th>Number</th><th>Abbreviation</th><th>Name and function</th><th>Initial value [unit]</th><th>Setting range</th></tr>
<tr><td>PA04</td><td>*AOP1</td><td>Function selection A-1
This is used to select the forced stop input and forced stop deceleration function.
<table>
<tr><th>Setting digit</th><th>Explanation</th><th>Initial value</th></tr>
<tr><td>_ _ _ x</td><td rowspan="2">For manufacturer setting</td><td>0h</td></tr>
<tr><td>_ _ x _</td><td>0h</td></tr>
<tr><td>_ x _ _</td><td>Servo forced stop selection
0: Enabled (The forced stop input EM2 or EM1 is used.)
1: Disabled
(The forced stop input EM2 and EM1 are not used.)
Refer to the following table for details.</td><td>0h</td></tr>
<tr><td>x _ _ _</td><td>Forced stop deceleration function selection
0: Forced stop deceleration function disabled (EM1)
2: Forced stop deceleration function enabled (EM2)
Refer to the following table for details.</td><td>2h</td></tr>
</table>
<table>
<tr><th rowspan="2">Setting value</th><th rowspan="2">EM2/EM1 selection</th><th colspan="2">Deceleration method</th></tr>
<tr><th>EM2 or EM1 is off</th><th>Alarm occurred</th></tr>
<tr><td>0 0 _ _</td><td>EM1</td><td>MBR (Electromagnetic brake interlock) turns off without the forced stop deceleration.</td><td>MBR (Electromagnetic brake interlock) turns off without the forced stop deceleration.</td></tr>
<tr><td>2 0 _ _</td><td>EM2</td><td>MBR (Electromagnetic brake interlock) turns off after the forced stop deceleration.</td><td>MBR (Electromagnetic brake interlock) turns off after the forced stop deceleration.</td></tr>
<tr><td>0 1 _ _</td><td>Not using EM2 or EM1</td><td></td><td>MBR (Electromagnetic brake interlock) turns off without the forced stop deceleration.</td></tr>
<tr><td>2 1 _ _</td><td>Not using EM2 or EM1</td><td></td><td>MBR (Electromagnetic brake interlock) turns off after the forced stop deceleration.</td></tr>
</table></td><td>Refer to Name and function column.</td><td></td></tr>
</table>

1.2.5 24 V DC power supply for interface: built-in ⇒ outside supply requisite

These are the recommended specifications for a 24 V DC power source for interface that is required for renewal.
Select according to the following specifications.

<table>
<tr><th>Item</th><th>MR-J2S series</th><th>MR-J2M series</th><th></th><th>MR-J4 series</th></tr>
<tr><td rowspan="2">For interface
24 V DC power supply</td><td>Servo amplifier
Internal power supply</td><td></td><td rowspan="2">→</td><td rowspan="2">External supply required
24 V DC ±10%

Power capacity
MR-J4-_A_: 500 mA or more
MR-J4-_B_: 300 mA or more</td></tr>
<tr><td>External supply
24 V DC ±10%
Power capacity: 80 mA or more</td><td>External supply
24 V DC ±10%
Power capacity: 300 mA or more</td></tr>
</table>

1.2.6 Servo setup software: Setup software (SETUP161E) ⇒ MR Configurator2

Item	MR-J2S series		MR-J4 series
Servo setup software	Setup software (SETUP161E) Model: MRZJW3-SETUP161E	→	MR Configurator2 Model: SW1DNC-MRC2-E

(1) MR Configurator2 (SW1DNC-MRC2-E) specification

Item	Description
Project	Create/read/save/delete project, system setting, and print
Parameter	Parameter setting, amplifier axis name setting, parameter converter (Note 1)
Positioning data (Note 2)	Point table, program, indirect addressing
Monitor	Display all, I/O monitor, graph, and ABS data display
Diagnostics	Alarm display, alarm onset data display, drive recorder, display of the reason for no rotation, system configuration, life diagnosis, machine diagnosis.
Test operation	Jog operation, positioning operation, motor-less operation, DO forced output, and program operation, test operation event information, single-step feed (Note 2)
Adjustment	One-touch tuning, tuning, and machine analyzer
Others	Servo assistant, parameter setting range update, help display, connection to MITSUBISHI ELECTRIC FA Global Website

Note 1. This function is available only in standard control mode.
2. SW1DNC-MRC2-E supports only MR-J4-_A_-RJ.

(2) System configuration
For servo setup software components, refer to the Instruction Manual.

1.2.7 Communication I / F: RS-232C ⇒ USB

For connection with PC-AT compatible personal computer

Item	MR-J2S series		MR-J4 series
Communication cable	RS-232C communication MR-CPCATCBL3M Cable length: 3 m	→	USB communication MR-J3USBCBL3M Cable length: 3 m

1.2.8 Servo amplifier initializing time

This section explains the initializing time of the servo amplifier (the time taken between power-on and servo-on reception). The initializing time is 2 s at maximum for the MR-J2S-_A_servo amplifier, but 3.5 s at maximum for the MR-J4-_A_servo amplifier. Note the initializing time difference upon replacement.

<Points to note upon replacement>

(1) When using the electromagnetic brake to prevent a drop in a vertical lift application or the like with an external timer to adjust the brake release time, the lift may drop due to a longer servo-lock time. Adjust the brake release time as necessary or use MBR (electromagnetic brake interlock signal).

(2) A longer servo-on time at power-on may cause a delay in the servo motor starting time after power-up. Please take note.

(1) MR-J2S-_A_ series servo amplifier
The initializing time is 1 to 2 s.

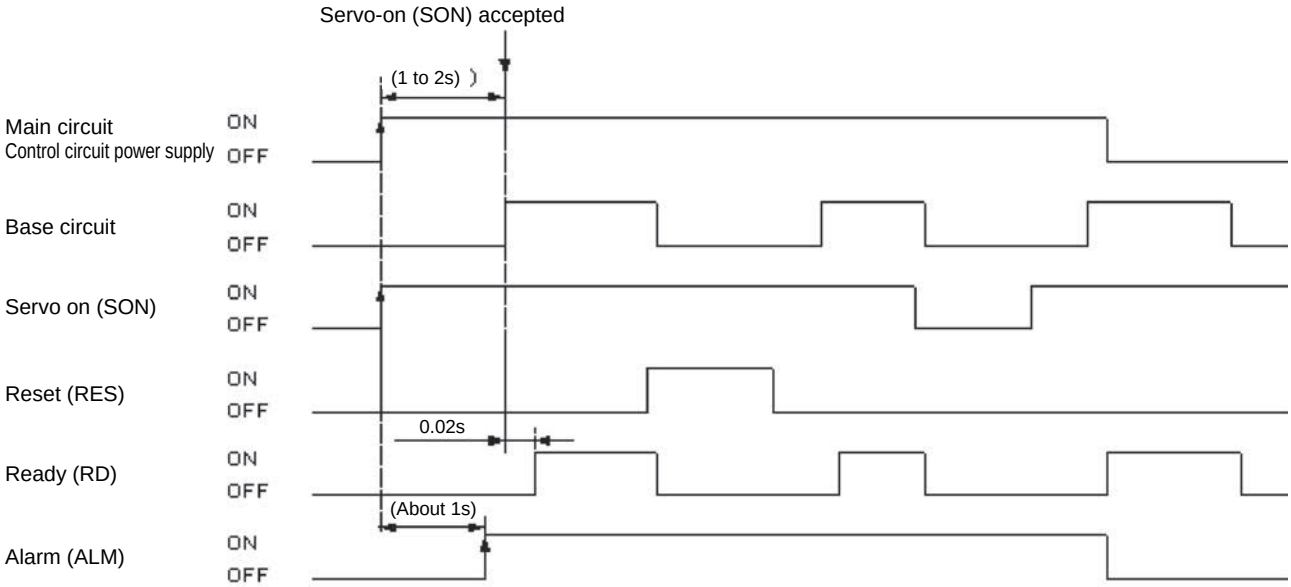

(2) MR-J2M-P8A series servo amplifier
The initializing time is 3 s.

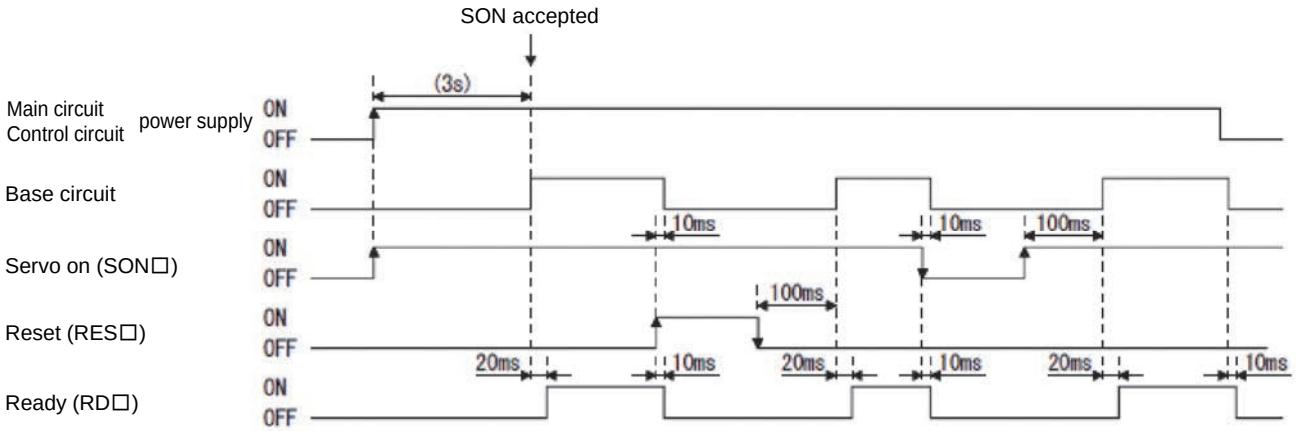

(3) MR-J2S-_B_ series servo amplifier
The initializing time is 3 to 4 s.

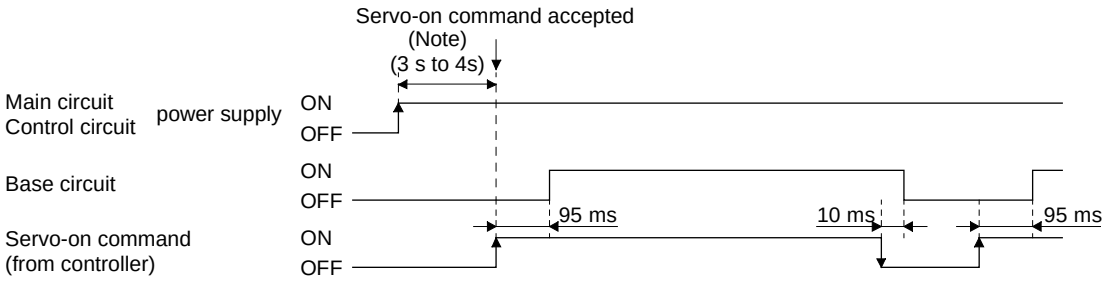

(4) MR-J2M-P8B series servo amplifier
The initializing time is 4 s.

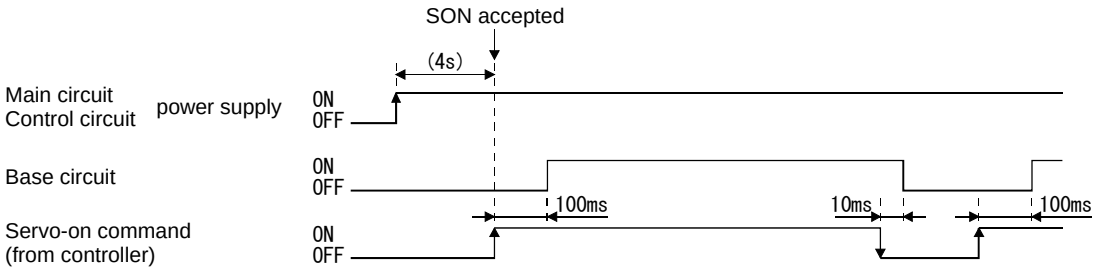

(5) MR-J4-_A_ / MR-J4-_B_ series servo amplifier
The initializing time is 2.5 to 3.5 s.

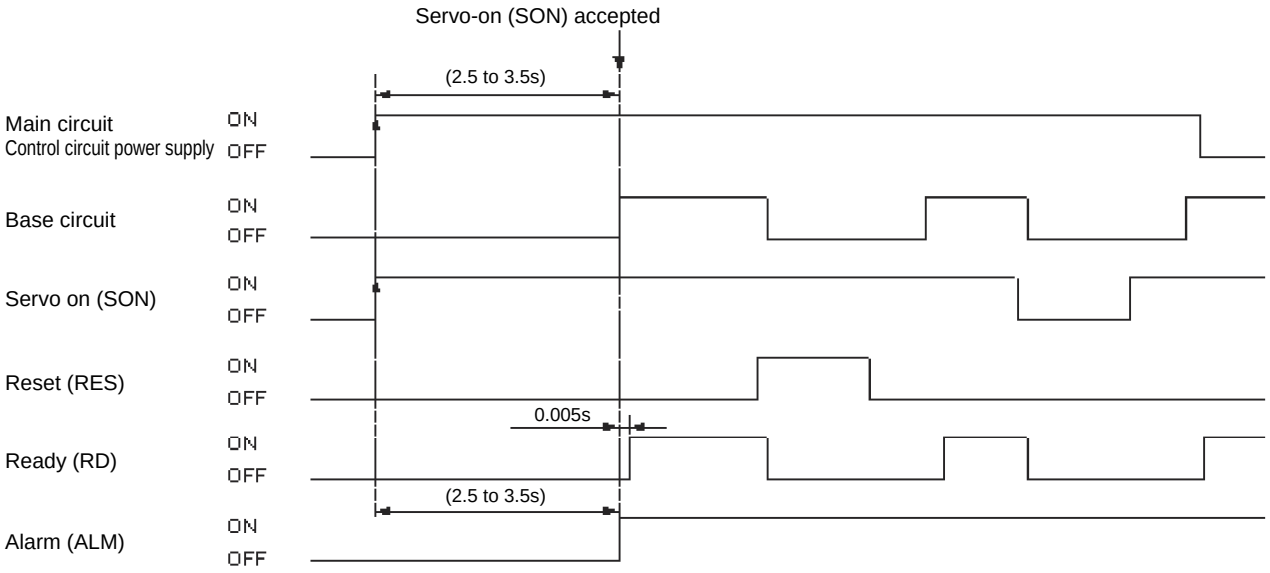

1.2.9 The pulse width of the encoder Z-Phase pulse

Note that the pulse width and start-up timing of the encoder Z-phase pulse signal (OP) output from the servo amplifier are different between the MR-J2S / MR-J2M series and the MR-J4 series.

<Precautions>

* Always reset the home position upon replacement.

<Servo amplifier replacement>

	MR-J2S/MR-J2M series	MR-J4 series
At low speed Lower than approximately 130 r/min	128/131,072 pulses 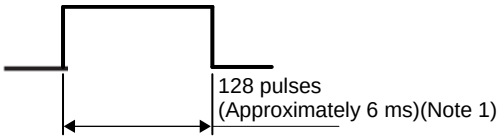 	128/131,072 pulses 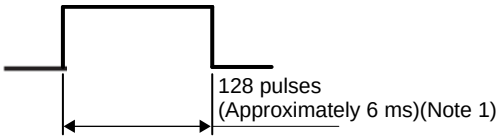
At high speed Approximately 130 r/min or higher	Approximately 440 μs fixed 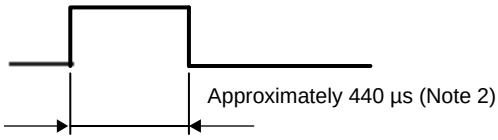 	Approximately 440 μs fixed 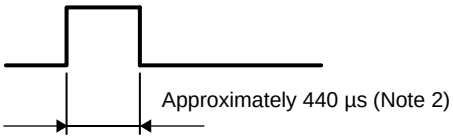

Note 1. This is the pulse width when the servo motor rotates at 10 r/min. The time for the pulse width varies depending on the number of the servo motor revolutions.

2. Pulse width = 128 × (60/(servo motor speed × 131072) × 10^6 [μs]

<Simultaneous replacement>

	HG-KR, MR, SR motor
At low speed Lower than approximately 130 r/min	4,096/4,194,304 pulses 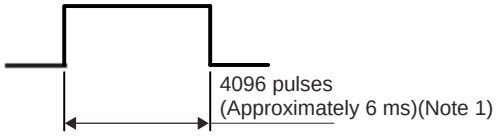
At high speed Approximately 130 r/min or higher	Approximately 400 μs fixed 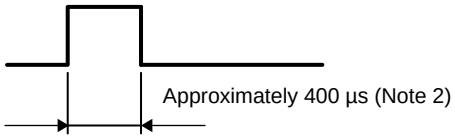

Note 1. This is the pulse width when the servo motor rotates at 10 r/min. The time for the pulse width varies depending on the number of the servo motor revolutions.

2. Pulse width = 4096 × (60/(servo motor speed ×4194304) ×10^6 [μs]

2. SERVO AMPLIFIER DIMENSIONS/ATTACHMENT DIFFERENCES

2.1 MR-J2S ⇒ MR-J4 Comparison Table of Servo Amplifier Dimensions/Installation Differences

2.1.1 General-purpose interface/SSCNET interface 200 V class (22 kW or less)

The following table shows comparison of the MR-J2S series and MR-J4 series dimensions. The height and width of the MR-J4 series are the same or smaller than the MR-J2S series basically. The depth is larger for the 400 W and 600 W capacities. The replacements for 1 kW or less capacity types are possible using the same mounting holes. The number of mounting screws is different for the 2 kW and 3.5 kW capacities, and the mounting screw distance is different for the 5 kW to 22 kW capacities. The screw sizes are different for the 11 kW and 15 kW capacities. (Refer to the comparison of dimensions.)

Comparison of dimensions (comparison between the same capacity types) Unit: mm

Model MR-J2S series	Model MR-J4 series	Height		Width		Depth		Mounting screw pitch	
		MR-J2S	MR-J4	MR-J2S	MR-J4	MR-J2S	MR-J4	MR-J2S	MR-J4
MR-J2S-10_	MR-J4-10_	168	168	50	**40**	135	135	156 (Vertical) (2 screws)	156 (Vertical) (2 screws)
MR-J2S-20_	MR-J4-20_								
MR-J2S-40_	MR-J4-40_			70			**170** (Note 1)		
MR-J2S-60_	MR-J4-60_								
MR-J2S-70_	MR-J4-70_				**60**	190	**185**	156 (Vertical)/ 42 (Horizontal) (3 screws)	156 (Vertical)/ 42 (Horizontal) (3 screws)
MR-J2S-100_	MR-J4-100_								
MR-J2S-200_	MR-J4-200_			90	90	195	195	156 (Vertical)/ 78 (Horizontal) (4 screws)	156 (Vertical)/ 78 (Horizontal) **(3 screws)** (Note 2)
MR-J2S-350_	MR-J4-350_								
MR-J2S-500_	MR-J4-500_	250	250	130	**105**	200	200	235 (Vertical)/ 118 (Horizontal) (4 screws)	235 (Vertical)/ **93 (Horizontal)** (4 screws)
MR-J2S-700_	MR-J4-700_	350	**300**	180	**172**			335 (Vertical)/ 160 (Horizontal) (4 screws)	**285 (Vertical)**/ 160 (Horizontal) (4 screws)
MR-J2S-11K_	MR-J4-11K_	400	400	260	**220**	260	260	376 (Vertical)/ 236 (Horizontal) (4 screws)	**380 (Vertical)/ 196 (Horizontal)** (4 screws)
MR-J2S-15K_	MR-J4-15K_								
MR-J2S-22K_	MR-J4-22K_			350	**260**			376 (Vertical)/ 326 (Horizontal) (4 screws)	376 (Vertical)/ **236 (Horizontal)** (4 screws)

Note 1. The depth will increase.
2. The number of mounting screws will be changed.

• Dimensions with differences are **shown with shading**.

2.1.2 General-purpose interface/SSCNET interface 100 V class (0.4 kW or less)

The following table shows comparison of the MR-J2S series and MR-J4 series dimensions. The height and width of the MR-J4 series are the same or smaller than the MR-J2S series basically. The depth is larger for the 400 W and 600 W capacities. The mounting dimensions are interchangeable.

Comparison of dimensions (comparison between the same capacity types) Unit: mm

Model MR-J2S series	Model MR-J4 series	Height		Width		Depth		Mounting screw pitch	
		MR-J2S	MR-J4	MR-J2S	MR-J4	MR-J2S	MR-J4	MR-J2S	MR-J4
MR-J2S-10_1	MR-J4-10_1	168	168	50	**40**	135	135	156 (Vertical) (2 screws)	156 (Vertical) (2 screws)
MR-J2S-20_1	MR-J4-20_1								
MR-J2S-40_1	MR-J4-40_1			70			**170** (Note)		

Note. The depth will increase.

• Dimensions with differences are **shown with shading**.

2.1.3 Built-in positioning function/program supported 200 V class (7 kW or less)

The following table shows comparison of the MR-J2S series and MR-J4 series dimensions. The height and width of the MR-J4 series are the same or smaller than the MR-J2S series basically. The depth is larger for the 400 W and 600 W capacities. The replacements for 1 kW or less capacity types are possible using the same mounting holes. The number of mounting screws is different for the 2 kW and 3.5 kW capacities, and the mounting screw distance is different for the 5 kW to 7 kW capacities.

Comparison of dimensions (comparison between the same capacity types) Unit: mm

Model MR-J2S series	Model MR-J4 series	Height		Width		Depth		Mounting screw pitch	
		MR-J2S	MR-J4	MR-J2S	MR-J4	MR-J2S	MR-J4	MR-J2S	MR-J4
MR-J2S-10_	MR-J4-10A-RJ	168	168	50	**40**	135	135	156 (Vertical) (2 screws)	156 (Vertical) (2 screws)
MR-J2S-20_	MR-J4-20A-RJ								
MR-J2S-40_	MR-J4-40A-RJ			70			**170** (Note 1)		
MR-J2S-60_	MR-J4-60A-RJ								
MR-J2S-70_	MR-J4-70A-RJ				**60**	190	**185**	156 (Vertical)/ 42 (Horizontal) (3 screws)	156 (Vertical)/ 42 (Horizontal) (3 screws)
MR-J2S-100_	MR-J4-100A-RJ								
MR-J2S-200_	MR-J4-200A-RJ			90	90	195	195	156 (Vertical)/ 78 (Horizontal) (4 screws)	156 (Vertical)/ 78 (Horizontal) **(3 screws)** (Note 2)
MR-J2S-350_	MR-J4-350A-RJ								
MR-J2S-500_	MR-J4-500A-RJ	250	250	130	**105**	200	200	235 (Vertical)/ 118 (Horizontal) (4 screws)	235 (Vertical)/ **93 (Horizontal)** (4 screws)
MR-J2S-700_	MR-J4-700A-RJ	350	**300**	180	**172**			335 (Vertical)/ 160 (Horizontal) (4 screws)	**285 (Vertical)**/ 160 (Horizontal) (4 screws)

Note 1. The depth will increase.
2. The number of mounting screws will be changed.

• Dimensions with differences are **shown with shading**.

2.1.4 Built-in positioning function/program supported 100 V class (0.4 kW or less)

The following table shows comparison of the MR-J2S series and MR-J4 series dimensions. The height and width of the MR-J3 series are the same or smaller than the MR-J2S series. The depth is larger for the 400 W capacity. The mounting dimensions are interchangeable.

Comparison of dimensions (comparison between the same capacity types) Unit: mm

Model MR-J2S series	Model MR-J4 series	Height		Width		Depth		Mounting screw pitch	
		MR-J2S	MR-J4	MR-J2S	MR-J4	MR-J2S	MR-J4	MR-J2S	MR-J4
MR-J2S-10_1	MR-J4-10A1-RJ	168	168	50	**40**	135	135	156 (Vertical) (2 screws)	156 (Vertical) (2 screws)
MR-J2S-20_1	MR-J4-20A1-RJ								
MR-J2S-40_1	MR-J4-40A1-RJ			70			**170** (Note)		

Note. The depth will increase.

• Dimensions with differences are **shown with shading**.

Comparison of 200 V/100 V class dimensions

MR-J2S series dimensions	MR-J4 series dimensions

MR-J2S-10_, MR-J2S-20_

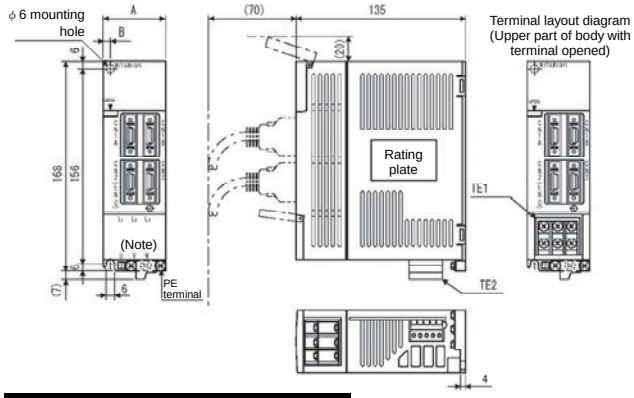

Servo amplifier	Variable dimensions		Mass [kg]
	A	B	
MR-J2S-10A(1)	50	6	0.7
MR-J2S-20A(1)			
MR-J2S-40A(1)	70	22	1.1
MR-J2S-60A			

MR-J4-10_, MR-J4-20_

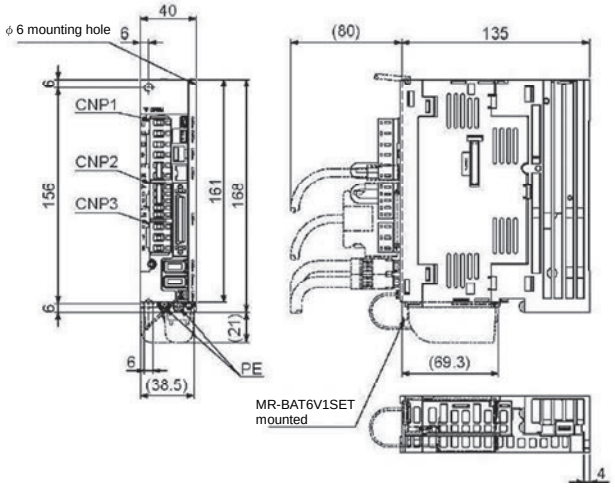

MR-J2S-40_, MR-J2S-60_

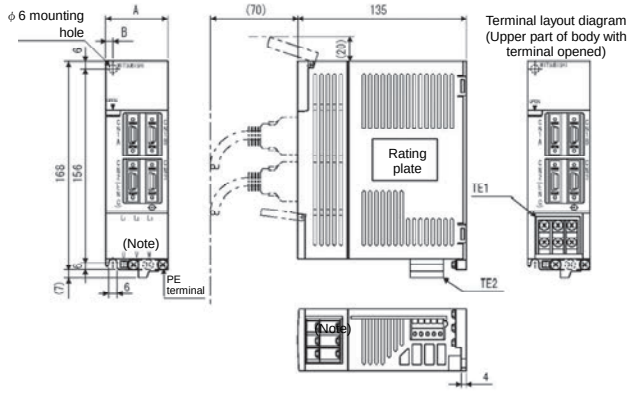

Servo amplifier	Variable dimensions		Mass [kg]
	A	B	
MR-J2S-10A(1)	50	6	0.7
MR-J2S-20A(1)			
MR-J2S-40A(1)	70	22	1.1
MR-J2S-60A			

MR-J4-40_, MR-J4-60_

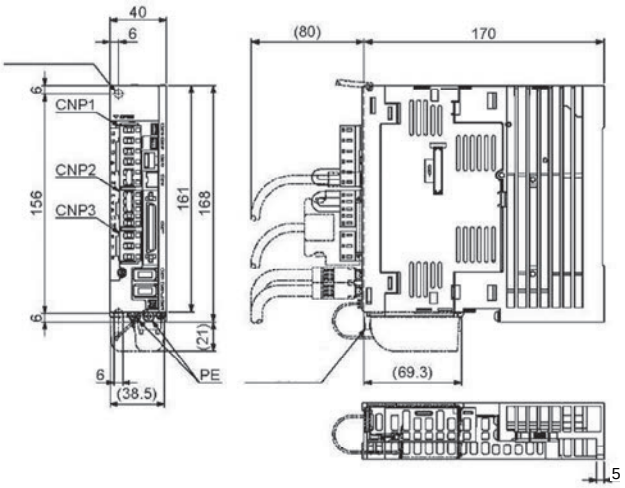

MR-J2S-70_, MR-J2S-100_

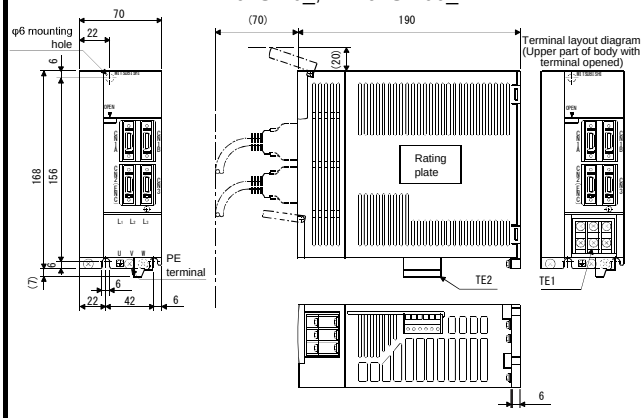

Servo amplifier	Mass [kg]
MR-J2S-70A	1.7
MR-J2S-100A	

MR-J4-70_, MR-J4-100_

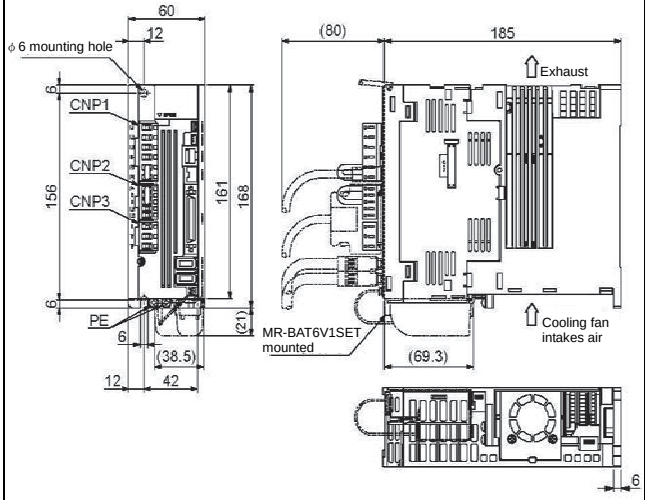

MR-J2S series dimensions	MR-J4 series dimensions

MR-J2S-200_

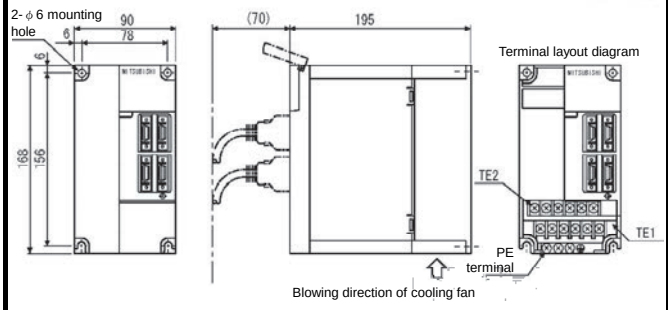

Servo amplifier	Mass [kg]
MR-J2S-200A	2.0
MR-J2S-350A	

MR-J4-200_

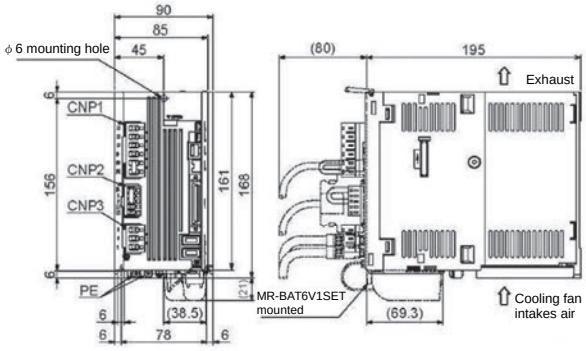

MR-J2S-350_

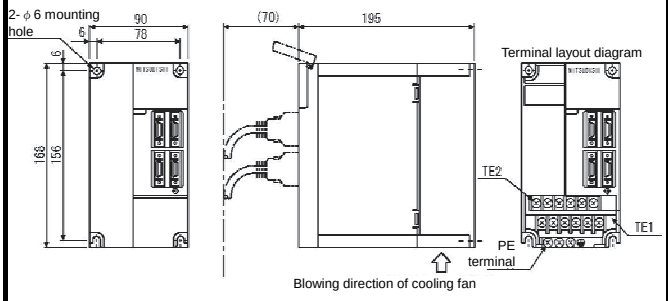

Servo amplifier	Mass [kg]
MR-J2S-200A	2.0
MR-J2S-350A	

MR-J4-350_

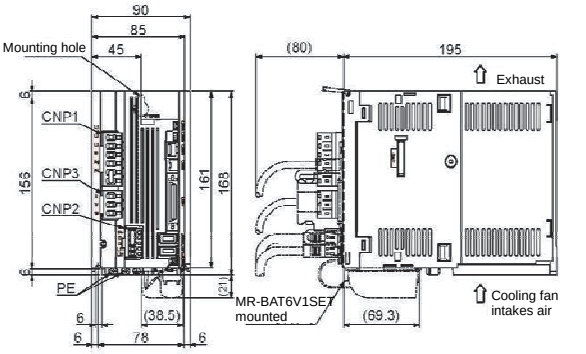

MR-J2S-500_

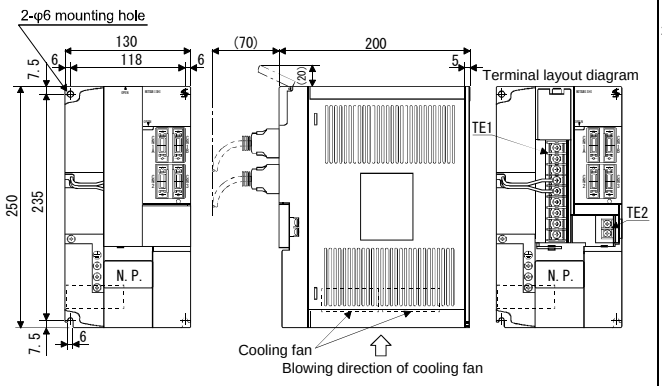

Servo amplifier	Mass [kg]
MR-J2S-500A	4.9

MR-J4-500_

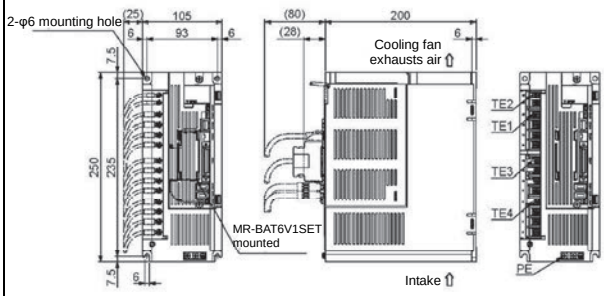

MR-J2S series dimensions

MR-J2S-700_

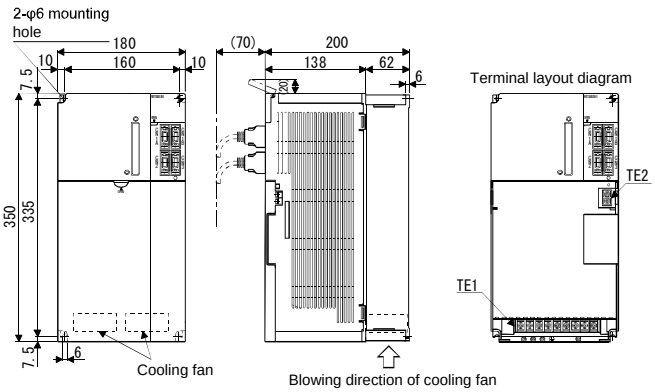

Servo amplifier	Mass [kg]
MR-J2S-700A	7.2

MR-J2S-11K_, MR-J2S-15K_

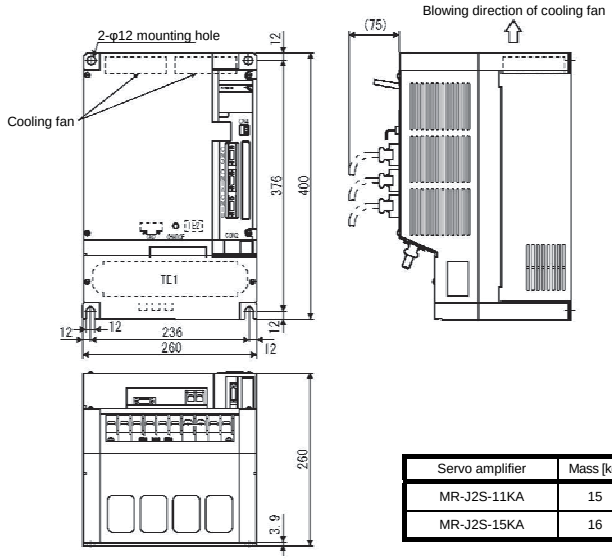

Servo amplifier	Mass [kg]
MR-J2S-11KA	15
MR-J2S-15KA	16

MR-J2S-22K_

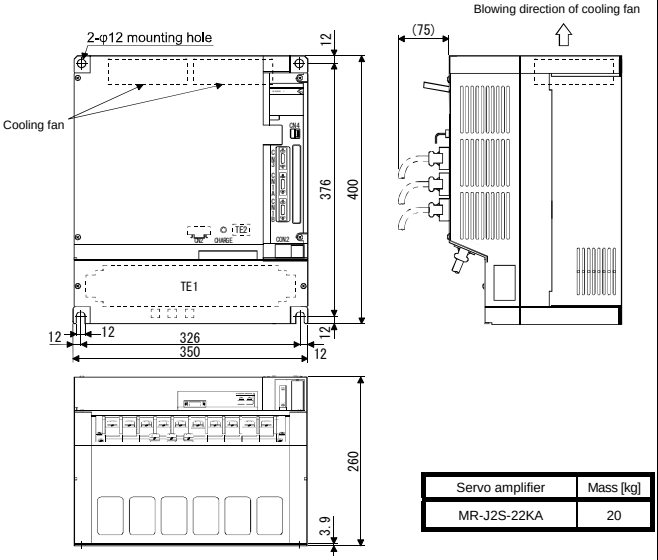

Servo amplifier	Mass [kg]
MR-J2S-22KA	20

MR-J4 series dimensions

MR-J4-700_

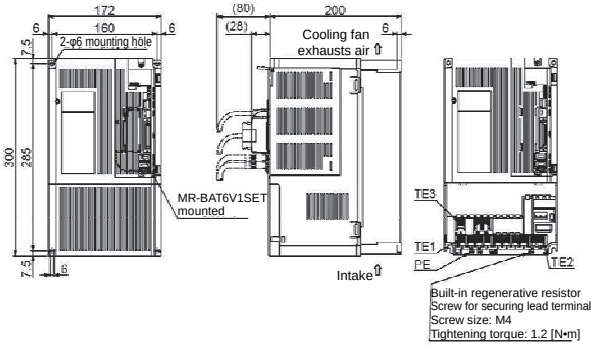

MR-J4-11K_, MR-J4-15K_

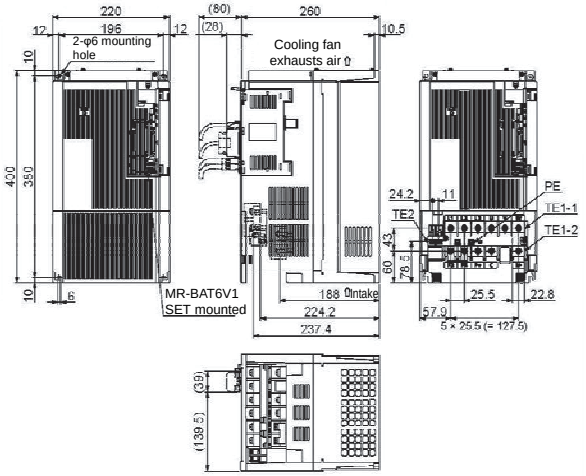

MR-J4-22K_

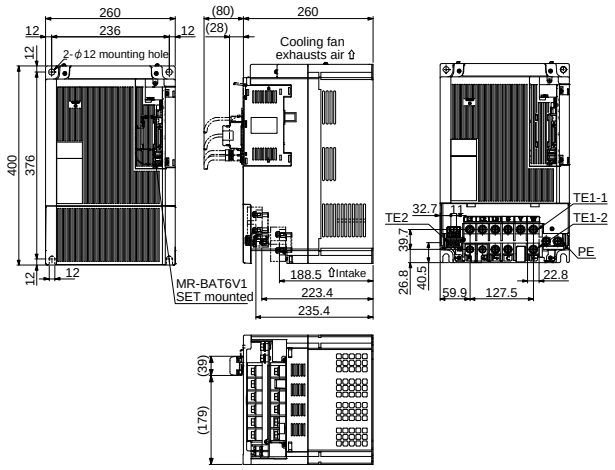

2.1.5 General-purpose interface drive unit/SSCNET interface drive unit 200 V class (30 kW or more)

The following table shows comparison of the MR-J2S series and MR-J4 series dimensions. The height and width of the MR-J4 series are the same or smaller than the MR-J2S series basically. The depth will increase when a heat sink is placed in a cabinet. For the mounting dimensions, the mounting screw pitch and screw sizes will be changed. (Refer to the comparison of dimensions.)

Comparison of dimensions (comparison between the same capacity types) Unit: mm

Model MR-J2S series	Model MR-J4 series	Height		Width		Depth		Mounting screw pitch	
		MR-J2S	MR-J4	MR-J2S	MR-J4	MR-J2S	MR-J4	MR-J2S	MR-J4
MR-J2S-30K_	MR-J4-DU30K_	500	**380**	450	**300**	300	**200 (328) (Note)**	480 (Vertical)/ 360 (Horizontal) (4 screws)	**360 (Vertical)/ 260 (Horizontal)** (4 screws)
MR-J2S-37K_	MR-J4-DU37K_								
MR-HP30KA	MR-CR55K			200	**300**			480 (Vertical)/ 110 (Horizontal) (4 screws)	

Note. The values in the parentheses are applied to when a heat sink is placed in a cabinet. Pay attention to the depth.

• Dimensions with differences are **shown with shading**.

MR-J2S series dimensions

MR-J2S-30K_, MR-J2S-37K_

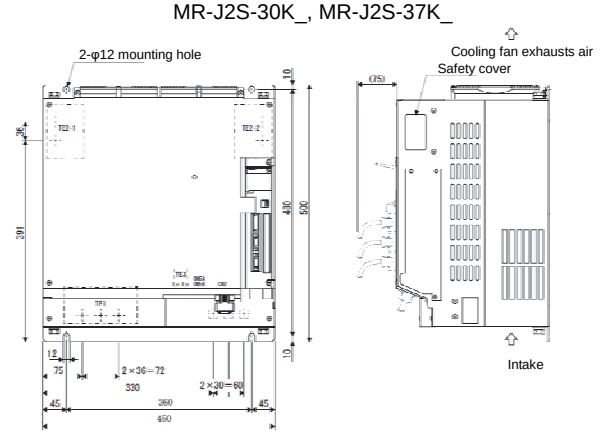

Servo amplifier	Variable dimensions		Mass [kg]
	A	B	
MR-J2S-30KA4/B4	290	380	36
MR-J2S-30KA/B	360	450	47
MR-J2S-37KA/B			
MR-J2S-37KA4/B4			
MR-J2S-45KA4/B4			
MR-J2S-55KA4/B4			

MR-J4 series dimensions

MR-J4-DU30K_, MR-J4-DU37K_

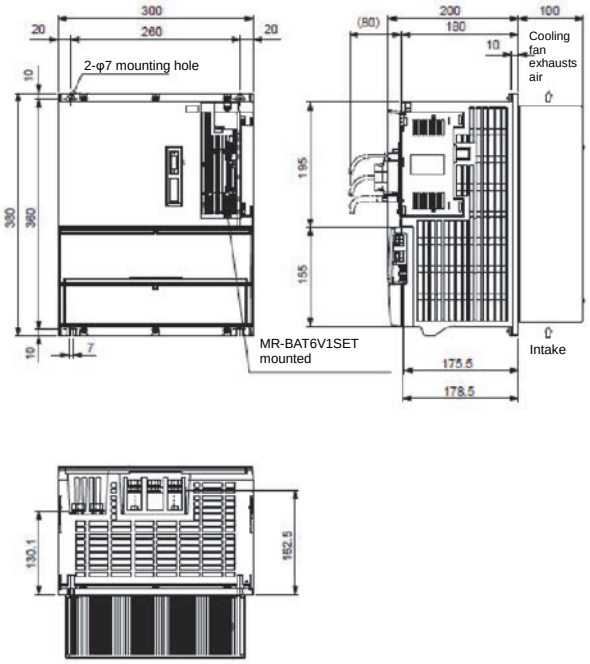

MR-HP30KA

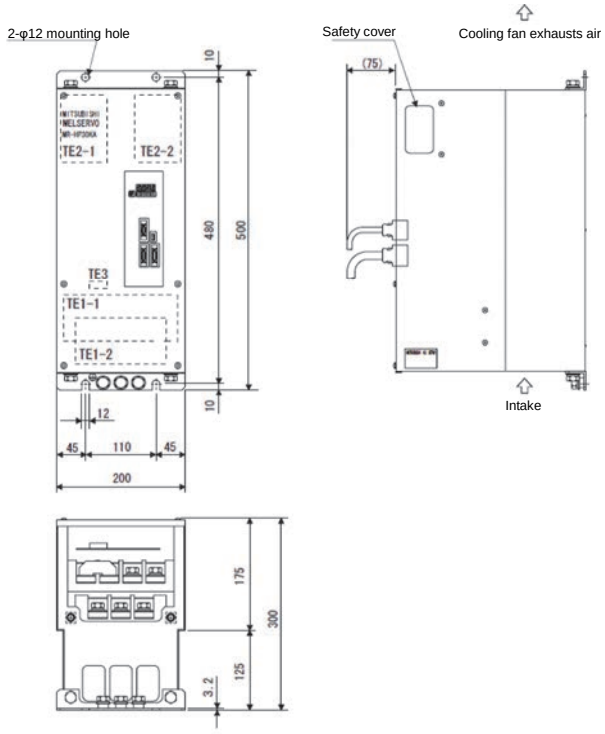

MR-CR55K

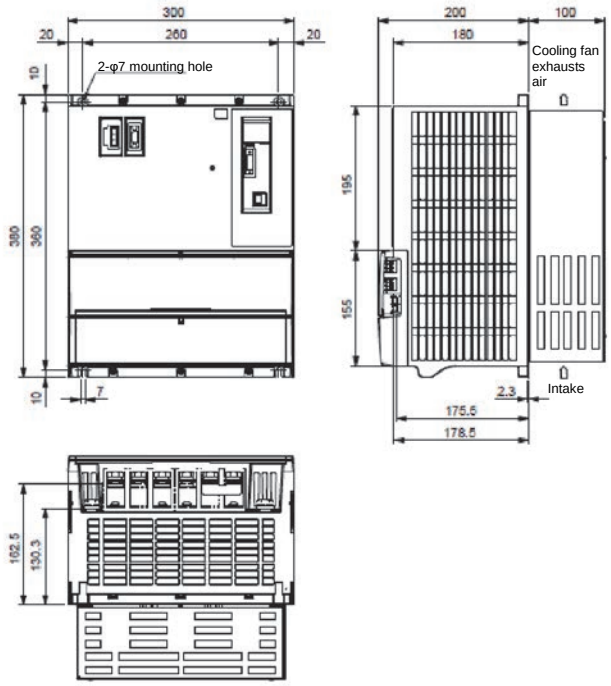

2.1.6 General-purpose interface/SSCNET interface 400 V class (22 kW or less)

The following table shows comparison of the MR-J2S series and MR-J4 series dimensions. The height and width of the MR-J3 series are the same or smaller than the MR-J2S series. The 5 kW capacity types are interchangeable. Please note the following when replacing: The number of mounting screws is different for the 600 W to 2 kW capacities, and the mounting screw distance is different for the 3.5 kW and 7 kW to 22 kW capacities. The screw sizes are different for the 11 kW and 15 kW capacities. (Refer to the comparison of dimensions.)

Comparison of dimensions (comparison between the same capacity types) Unit: mm

Model MR-J2S series	Model MR-J4 series	Height		Width		Depth		Mounting screw pitch	
		MR-J2S	MR-J4	MR-J2S	MR-J4	MR-J2S	MR-J4	MR-J2S	MR-J4
MR-J2S-60_4	MR-J4-60_4	168	168	90	**60**	195	195	156 (Vertical)/ 78 (Horizontal) (4 screws)	156 (Vertical)/ **42 (Horizontal)** **(3 screws)** (Note)
MR-J2S-100_4	MR-J4-100_4								
MR-J2S-200_4	MR-J4-200_4				90				156 (Vertical)/ 78 (Horizontal) **(3 screws)** (Note)
MR-J2S-350_4	MR-J4-350_4	250	250	130	**105**	200	200	235 (Vertical)/ 118 (Horizontal) (4 screws)	235 (Vertical)/ **93 (Horizontal)** (4 screws)
MR-J2S-500_4	MR-J4-500_4				130				235 (Vertical)/118 (Horizontal) (4 screws)
MR-J2S-700_4	MR-J4-700_4	350	**300**	180	**172**			335 (Vertical)/ 160 (Horizontal) (4 screws)	**285 (Vertical)/** 160 (Horizontal) (4 screws)
MR-J2S-11K_4	MR-J4-11K_4	400	400	260	**220**	260	260	376 (Vertical)/ 236 (Horizontal) (4 screws)	**380 (Vertical)/ 196 (Horizontal)** (4 screws)
MR-J2S-15K_4	MR-J4-15K_4								
MR-J2S-22K_4	MR-J4-22K_4			350	**260**			376 (Vertical)/ 326 (Horizontal) (4 screws)	**376 (Vertical)/ 236 (Horizontal)** (4 screws)

Note. The number of mounting screws will be changed.

• Dimensions with differences are **shown with shading**.

Comparison of 400 V class dimensions

MR-J2S series dimensions	MR-J4 series dimensions

MR-J2S-60_4, MR-J2S-100_4

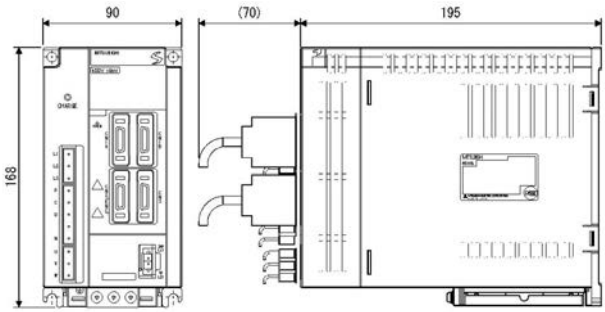

Servo amplifier	Mass [kg]
MR-J2S-60A4/B4	2.1
MR-J2S-100A4/B4	2.2
MR-J2S-200A4/B4	

MR-J4-60_4, MR-J4-100_4

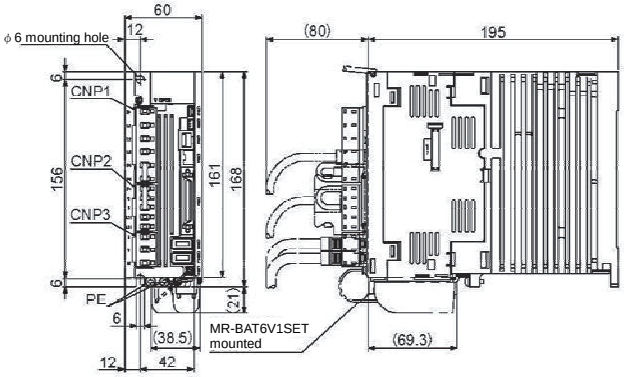

MR-J2S-200_4

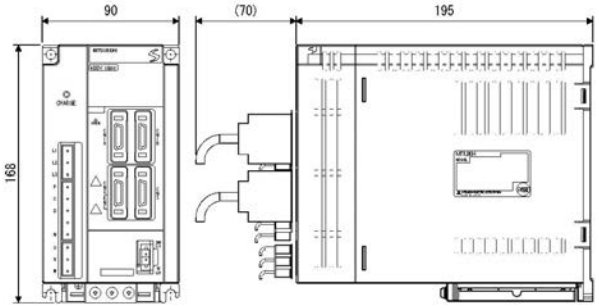

Servo amplifier	Mass [kg]
MR-J2S-60A4/B4	2.1
MR-J2S-100A4/B4	2.2
MR-J2S-200A4/B4	

MR-J4-200_4

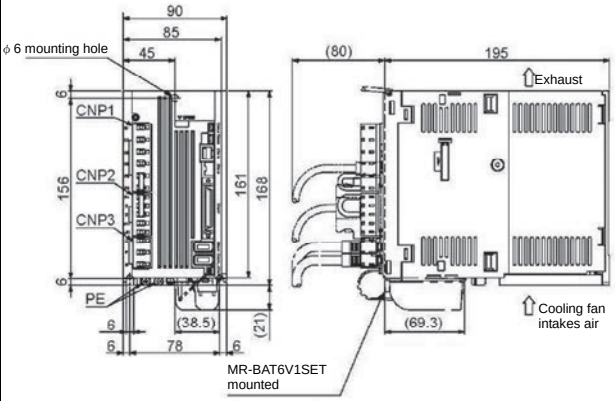

MR-J2S-350_4

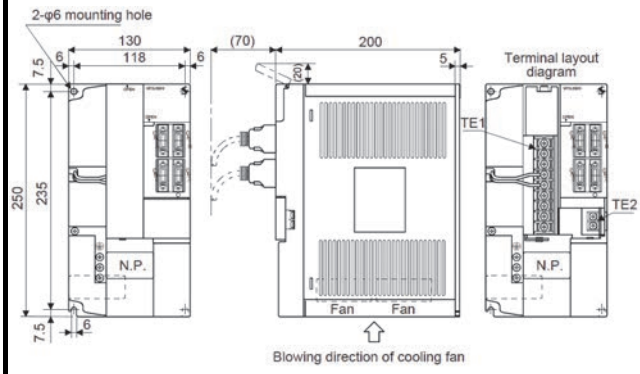

Servo amplifier	Mass [kg]
MR-J2S-350A4/B4	5
MR-J2S-500A4/B4	

MR-J4-350_4

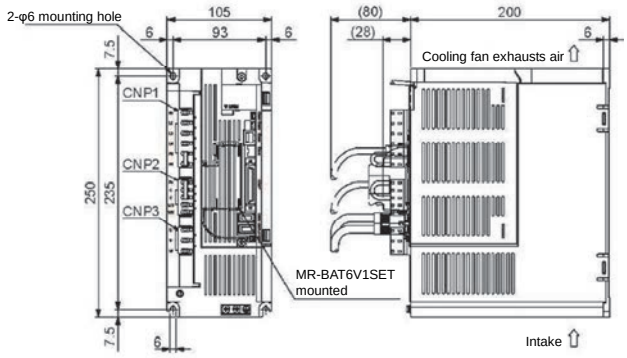

MR-J2S series dimensions	MR-J4 series dimensions

MR-J2S-500_4

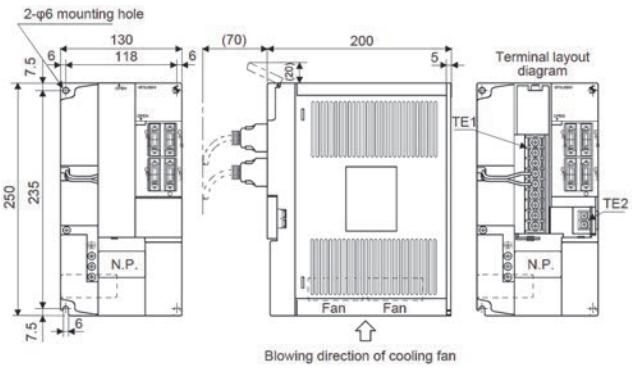

Servo amplifier	Mass [kg]
MR-J2S-350A4/B4	5
MR-J2S-500A4/B4	

MR-J4-500_4

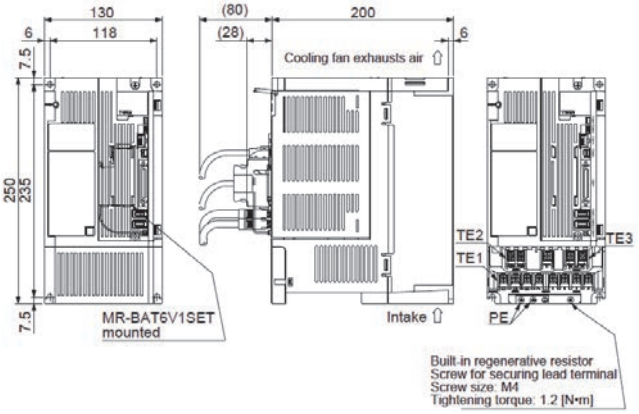

MR-J2S-700_4

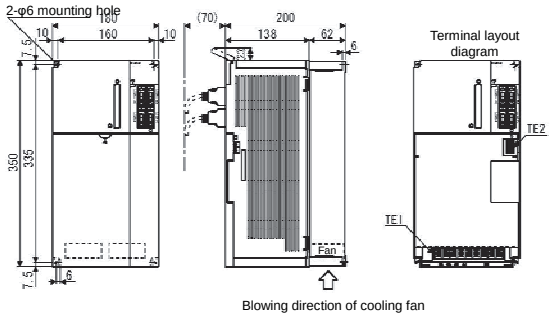

Servo amplifier	Mass [kg]
MR-J2S-700A4/B4	7.2

MR-J4-700_4

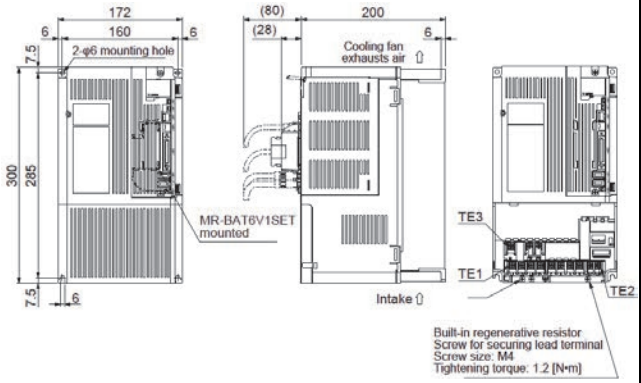

MR-J2S-11K_4, MR-J2S-15K_4

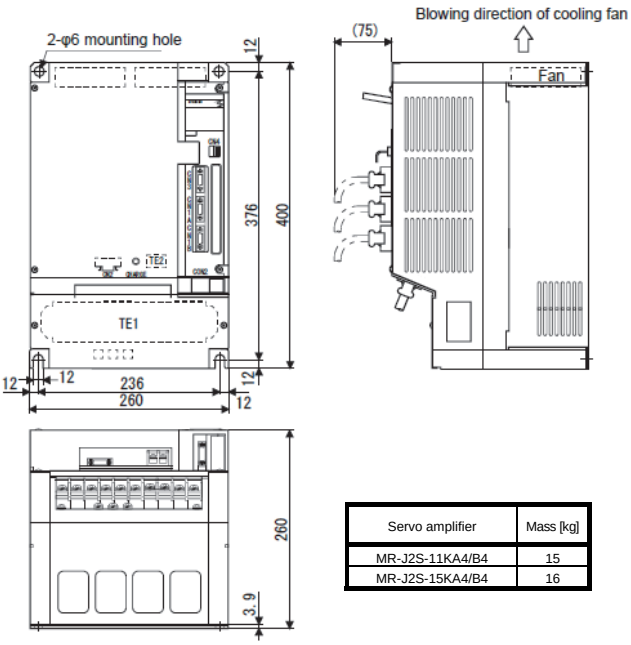

Servo amplifier	Mass [kg]
MR-J2S-11KA4/B4	15
MR-J2S-15KA4/B4	16

MR-J4-11K_4, MR-J4-15K_4

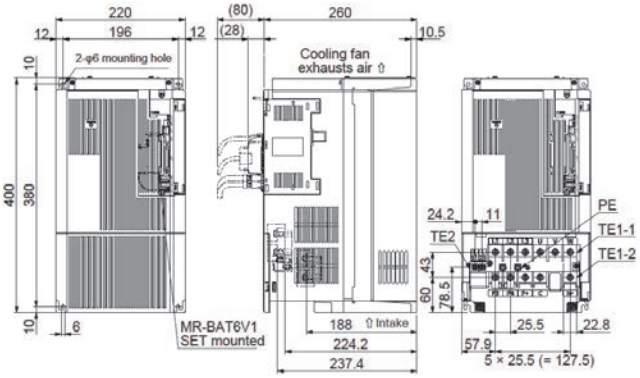

MR-J2S series dimensions	MR-J4 series dimensions
MR-J2S-22K_4	MR-J4-22K_4

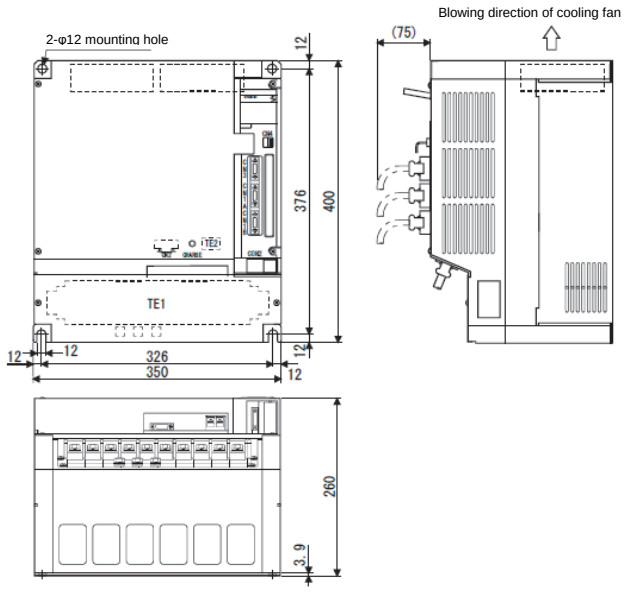

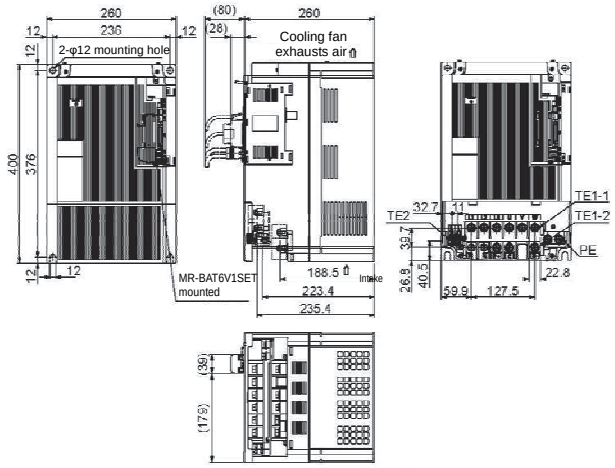

2.1.7 General-purpose interface drive unit/SSCNET interface drive unit 400 V class (30 kW or more)

The following table shows comparison of the MR-J2S series and MR-J4 series dimensions. The height and width of the MR-J4 series are the same or smaller than the MR-J2S series basically. The depth will increase when a heat sink is placed in a cabinet. For the mounting dimensions, the mounting screw pitch and screw sizes will be changed. (Refer to the comparison of dimensions.)

Comparison of dimensions (comparison between the same capacity types) Unit: mm

Model MR-J2S series	Model MR-J4 series	Height		Width		Depth		Mounting screw pitch	
		MR-J2S	MR-J4	MR-J2S	MR-J4	MR-J2S	MR-J4	MR-J2S	MR-J4
MR-J2S-30K_4	MR-J4-DU30K_4	500	**380**	380	**240**	300	**200 (328) (Note)**	480 (Vertical)/ 290 (Horizontal) (4 screws)	**360 (Vertical)/ 120 (Horizontal)** (4 screws)
MR-J2S-37K_4	MR-J4-DU37K_4			450				480 (Vertical)/ 360 (Horizontal) (4 screws)	
MR-J2S-45K_4	MR-J4-DU45K_4				**300**				**360 (Vertical)/ 260 (Horizontal)** (4 screws)
MR-J2S-55K_4	MR-J4-DU55K_4								
MR-HP55KA4	MR-CR55K4			200				480 (Vertical)/ 110 (Horizontal) (4 screws)	

Note. The values in the parentheses are applied to when a heat sink is placed in a cabinet. Pay attention to the depth.

• Dimensions with differences are **shown with shading**.

MR-J2S series dimensions	MR-J4 series dimensions

MR-J2S-30K_4

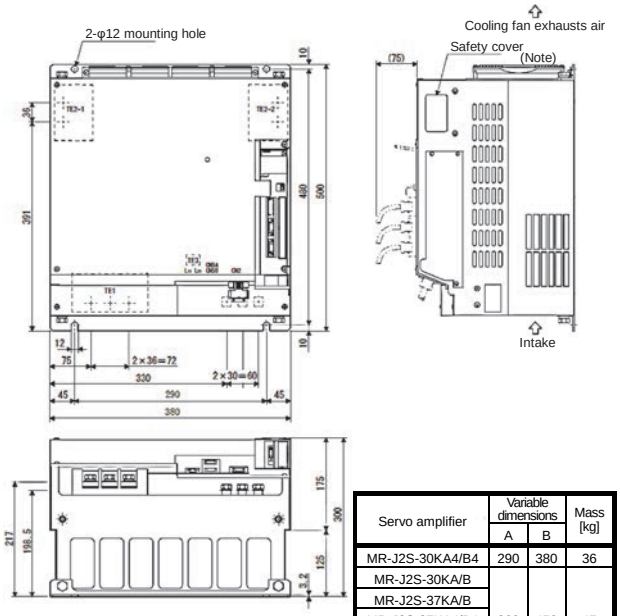

Servo amplifier	Variable dimensions		Mass [kg]
	A	B	
MR-J2S-30KA4/B4	290	380	36
MR-J2S-30KA/B	360	450	47
MR-J2S-37KA/B			
MR-J2S-37KA4/B4			
MR-J2S-45KA4/B4			
MR-J2S-55KA4/B4			

MR-J4-DU30K_4

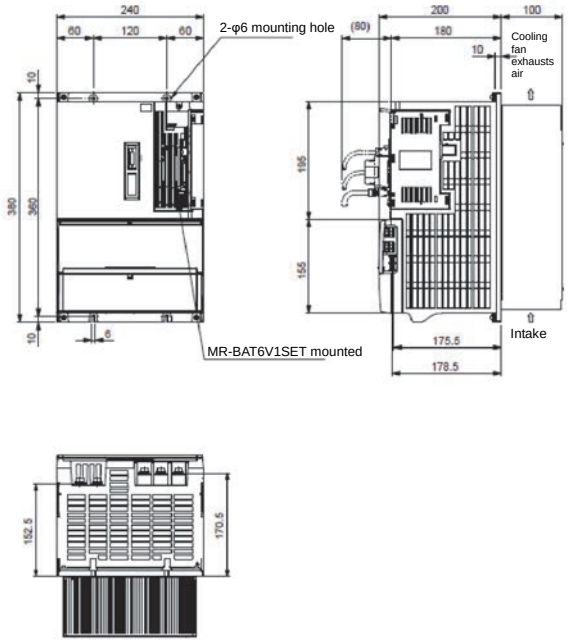

MR-J2S-37K_4

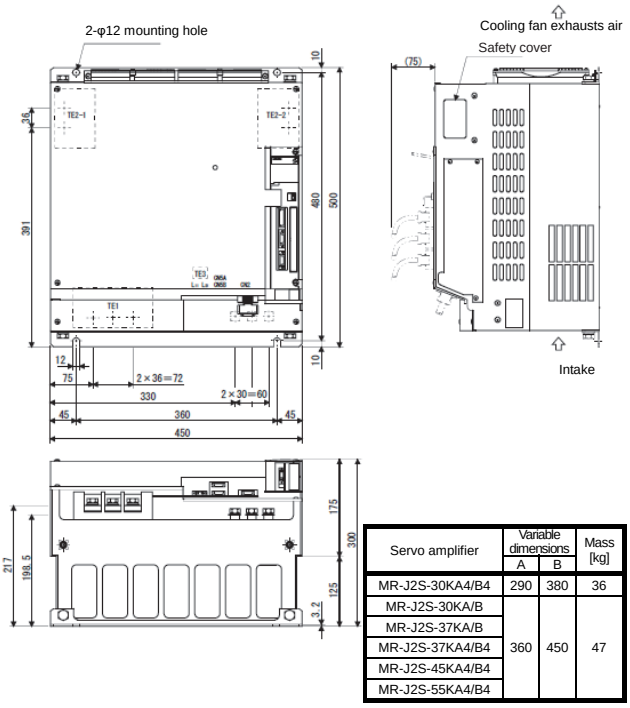

Servo amplifier	Variable dimensions		Mass [kg]
	A	B	
MR-J2S-30KA4/B4	290	380	36
MR-J2S-30KA/B	360	450	47
MR-J2S-37KA/B			
MR-J2S-37KA4/B4			
MR-J2S-45KA4/B4			
MR-J2S-55KA4/B4			

MR-J4-DU37K_4

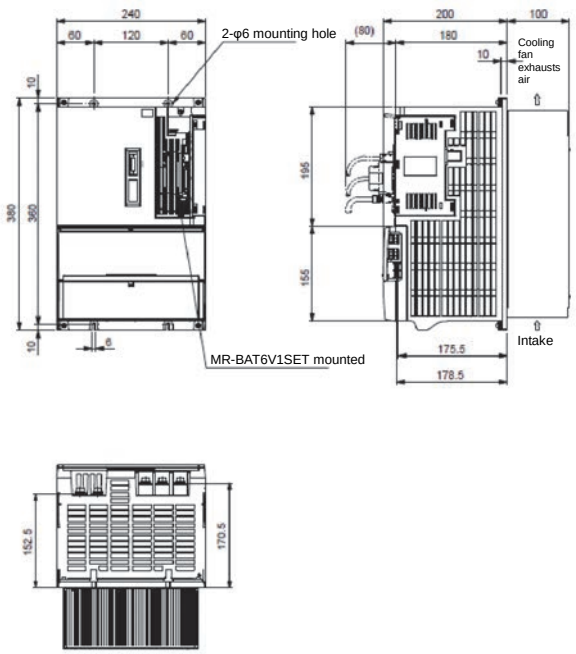

MR-J2S series dimensions

MR-J2S-45K_4, MR-J2S-55K_4

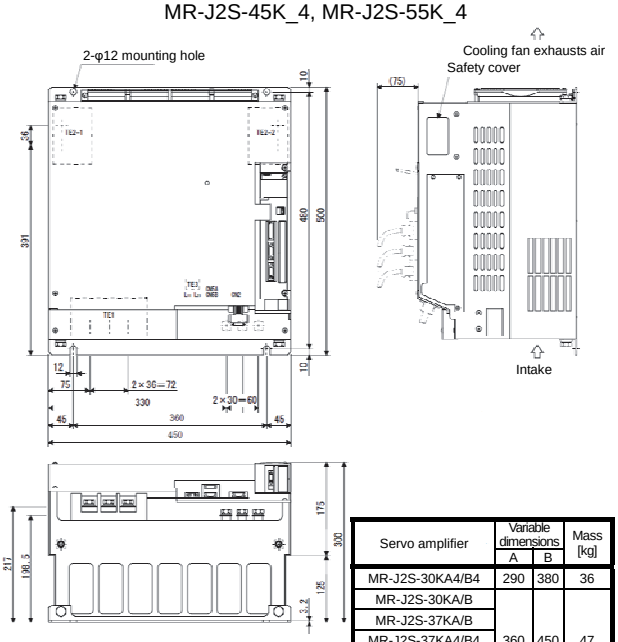

Servo amplifier	Variable dimensions		Mass [kg]
	A	B	
MR-J2S-30KA4/B4	290	380	36
MR-J2S-30KA/B	360	450	47
MR-J2S-37KA/B			
MR-J2S-37KA4/B4			
MR-J2S-45KA4/B4			
MR-J2S-55KA4/B4			

MR-J4 series dimensions

MR-J4-DU45K_4, MR-J4-DU55K_4

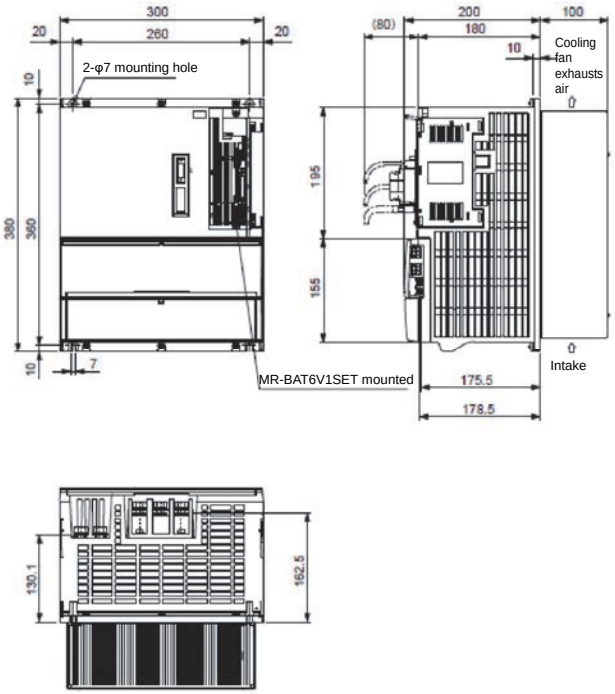

MR-HP55KA4

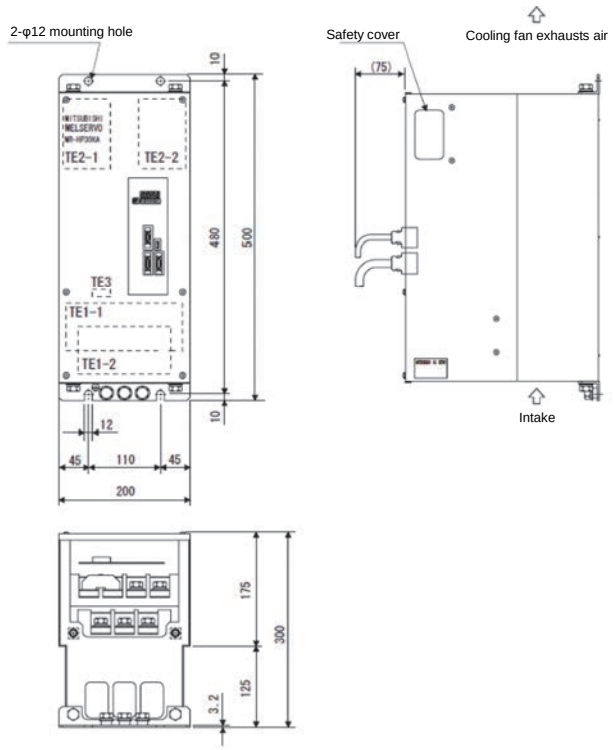

MR-CR55K4

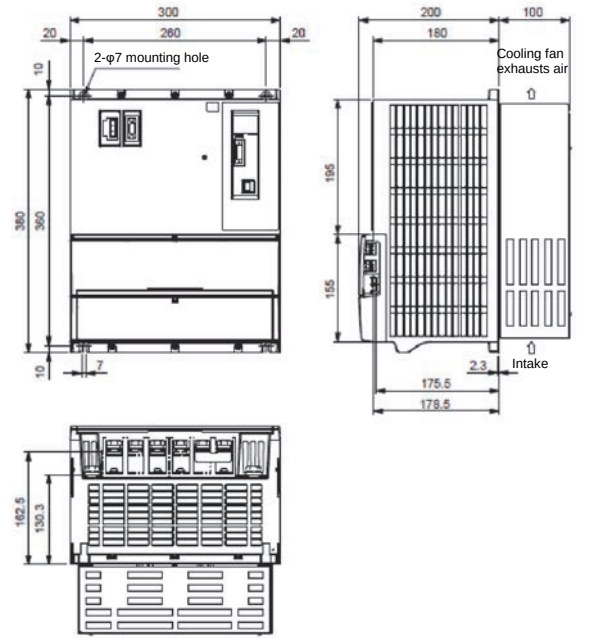

2.2 MR-J2M-_ ⇒ MR-J4-_ Comparison Table of Servo Amplifier Dimensions/Installation Differences

The following table shows comparison of the MR-J2M series and MR-J4 series dimensions. The width of the MR-J4 series is the same or smaller than the MR-J2M series. The depth is larger for the 400 W and 750 W capacities. Note that the height is larger for all the capacities. Mounting dimensions of the both series are significantly different. Please take note.

Comparison of dimensions (comparison between the same capacity types) Unit: mm

Model MR-J2M series	Model MR-J4 series	Height		Width		Depth		Mounting screw pitch	
		MR-J2M	MR-J4	MR-J2M	MR-J4	MR-J2M	MR-J4	MR-J2M	MR-J4
MR-J2M-BU4 + MR-J2M-P8A + MR-J2M-_DU	MR-J4-10, 20A × 4 units	140	**168 (Note)**	230	**40 × 4 = 160**	158	**135**	86 (Vertical)/ 218 (Horizontal) (4 screws)	**156 (Vertical) (2 screws) × 4**
	MR-J4-40A × 4 units						**170 (Note)**		
	MR-J4-70A × 2 units				**60 × 2 = 120**		**185 (Note)**		**Height 156/ width 42 (3 screws) × 2**
MR-J2M-BU6 + MR-J2M-P8A + MR-J2M-_DU	MR-J4-10, 20A × 6 units	140	**168 (Note)**	290	**40 × 6 = 240**	158	**135**	86 (Vertical)/ 278 (Horizontal) (4 screws)	**156 (Vertical) (2 screws) × 6**
	MR-J4-40A × 6 units						**170 (Note)**		
	MR-J4-70A × 3 units				**60 × 3 = 180**		**185 (Note)**		**Height 156/ width 42 (3 screws) × 3**
MR-J2M-BU8 + MR-J2M-P8A + MR-J2M-_DU	MR-J4-10, 20A × 8 units	140	**168 (Note)**	350	**40 × 8 = 320**	158	**135**	86 (Vertical)/ 338 (Horizontal) (4 screws)	**156 (Vertical) (2 screws) × 8**
	MR-J4-40A × 8 units						**170 (Note)**		
	MR-J4-70A × 4 units				**60 × 4 = 240**		**185 (Note)**		**Height 156/ width 42 (3 screws) × 4**

Note. The width will increase.

Dimensions with differences are **shown with shading**.

Comparison between the MR-J2M and the MR-J4 series

Series	Dimensions
MR-J2M-BU4 + MR-J2M-P8A + MR-J2M-_DU MR-J2M-BU4 + MR-J2M-P8B + MR-J2M-_DU	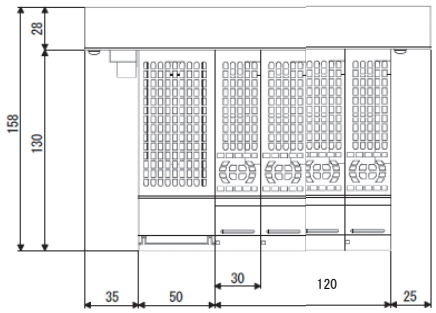 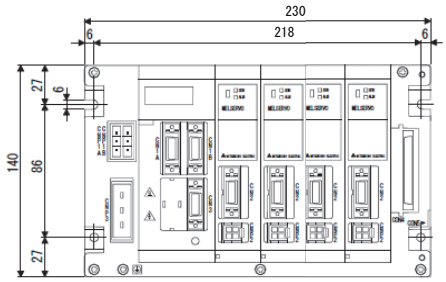 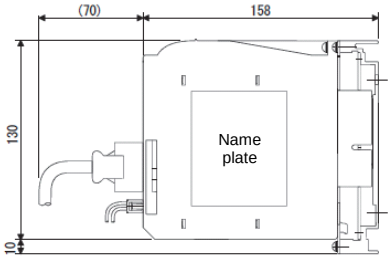
When four MR-J4-10_ units are closely mounted	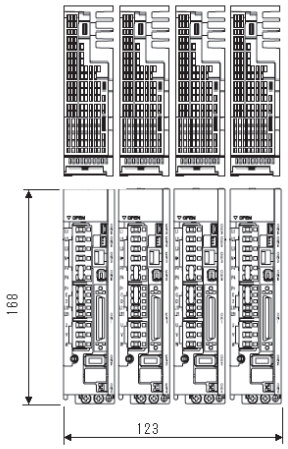 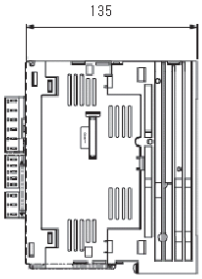 * When mounting the servo amplifiers closely, leave a clearance of 1 mm between the adjacent servo amplifiers in consideration of mounting tolerances. In this case, operate at the ambient temperatures 0 °C to 45 °C.

Series	Dimensions
MR-J2M-BU6 + MR-J2M-P8A + MR-J2M-_DU MR-J2M-BU6 + MR-J2M-P8B + MR-J2M-_DU	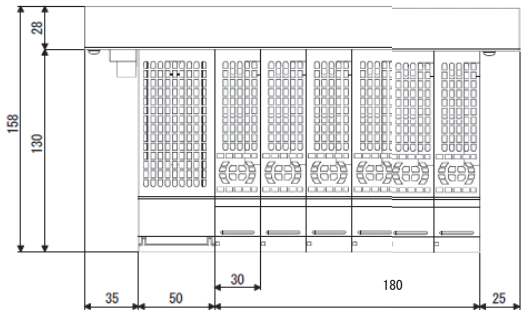 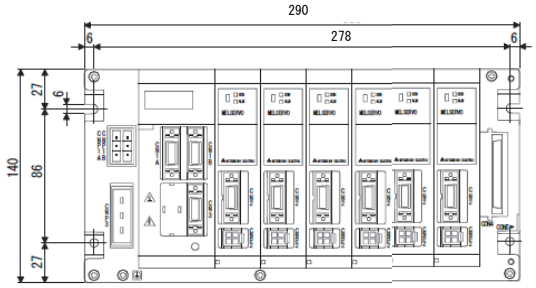 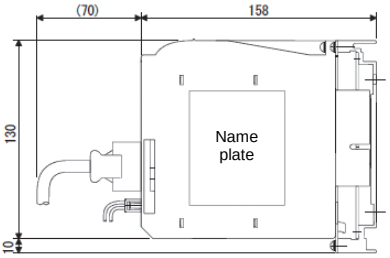
When six MR-J4-10_ units are closely mounted	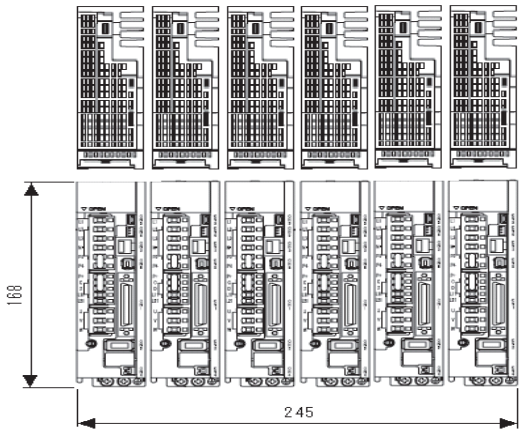 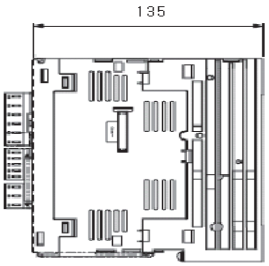 * When mounting the servo amplifiers closely, leave a clearance of 1 mm between the adjacent servo amplifiers in consideration of mounting tolerances. In this case, operate at the ambient temperatures 0 °C to 45 °C.

Series	Dimensions
MR-J2M-BU8 + MR-J2M-P8A + MR-J2M-_DU MR-J2M-BU8 + MR-J2M-P8B + MR-J2M-_DU	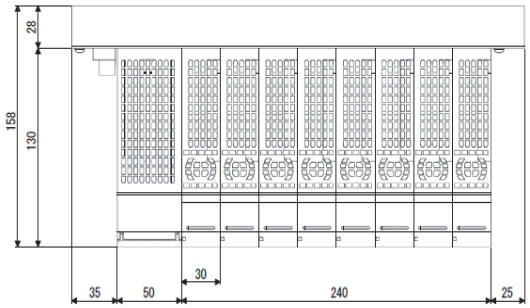 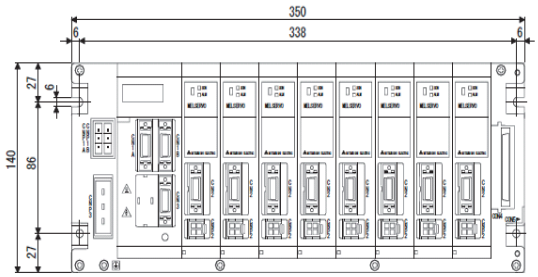 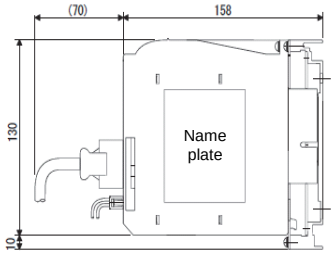
When eight MR-J4-10_ units are closely mounted	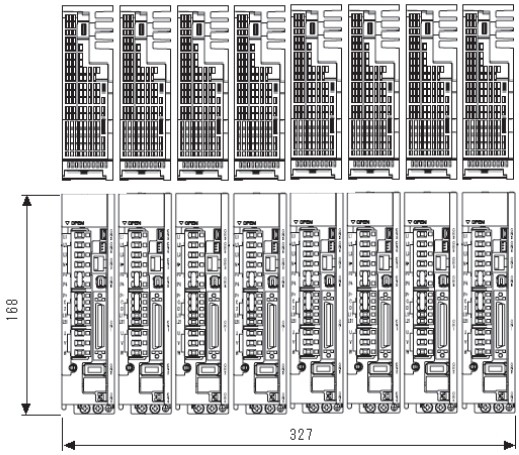 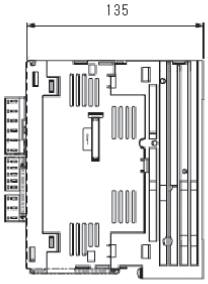 * When mounting the servo amplifiers closely, leave a clearance of 1 mm between the adjacent servo amplifiers in consideration of mounting tolerances. In this case, operate at the ambient temperatures 0 °C to 45 °C.

2.3 MR-J2S-_A_/MR-J2S-_CP_/MR-J2S-_CL_ Parameter Diversion Procedure

2.3.1 Operation procedure of parameter conversion

The parameter converter function of MR Configurator2 allows the servo parameters of MR-J2S-_A_/MR-J2S-_CP_/MR-J2S-_CL_ to be changed to the servo parameters of MR-J4-_A_(-RJ).
(Conversion of MR-J2S-_A_: version 1.12N or more; conversion of MR-J2S-_CP_/CL_: version 1.25B or more)

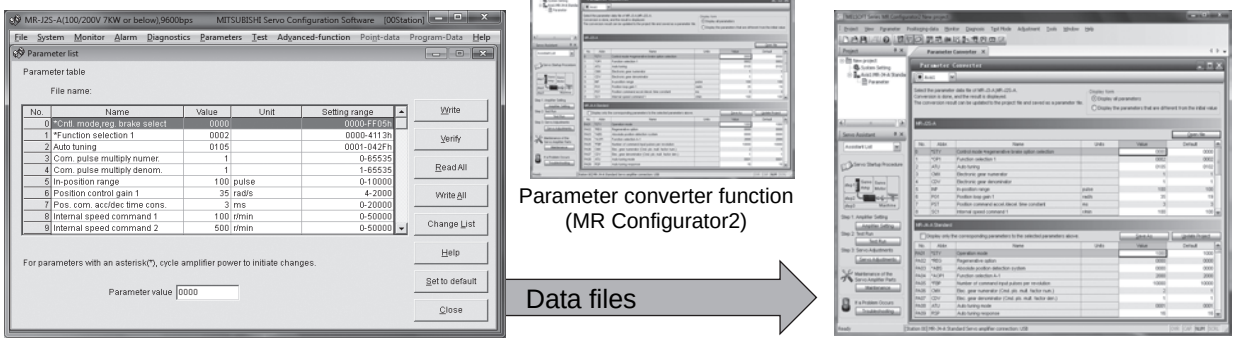

Setup software (SETUP161E)

Change MR-J2S-_A_/MR-J2S-_CP_/MR-J2S-_CL to MR-J4-_A_(-RJ)

MR Configurator2

2.3.2 MR-J2S-_A_/MR-J2S-_CP_/MR-J2S-_CL_ parameter diversion procedure

• Parameter reading from the servo amplifier MR-J2S-_A_/ MR-J2S-_CP_/ MR-J2S-_CL_

Start setup software (MRZJW3-SETUP161E).

• • • A connection with a PC-AT compatible personal computer is required.
RS-232C connection (MR-CPCATCBL3M)

↓

Set the system settings.

↓

Read the servo parameters.

↓

Save the parameter file.

↓

• Converting the parameters of MR-J2S-_A_/MR-J2S-_CP_/MR-J2S-_CL_ and writing them to the MR-J4-_A_(-RJ) servo amplifier

Start MR Configurator2 (SW1DNC-MRC2-E).

• • • A connection with a PC-AT compatible personal computer is required.
USB connection (MR-J3USBCBL3M)

↓

Create a new project.

↓

Change MR-J2S-_A_/MR-J2S-_CP_/MR-J2S-_CL_ parameters to MR-J4-_A_(-RJ) parameters.

↓

Write the changed parameters to the MR-J4-_A_(-RJ) servo amplifier.

2.3.3 Parameter reading from the servo amplifier MR-J2S-_A_/MR-J2S-_CP_/MR-J2S-_CL_

(1) Start the setup software (MRZJW3-SETUP161E).

(2) Set the system settings.
Click [System] in the menu to display the system settings dialog box.
Set the Model Selection, Baud Rate Selection, Comm Port Selection, Capacity selection, and Station number selection.

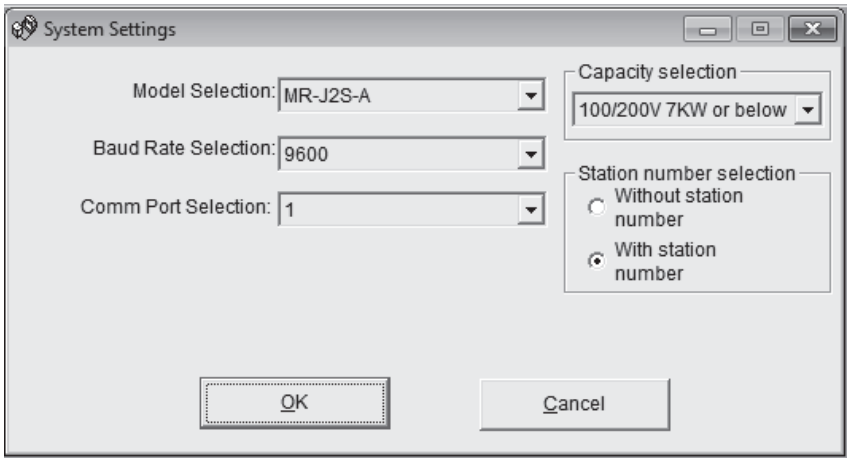

(3) Read the servo parameters.
Click [Parameters] in the menu to display the parameter list screen.
Connect the MR-J2S-_A_/MR-J2S-_CP_/MR-J2S-_CL_ servo amplifier to a personal computer and click the [Read All] button.

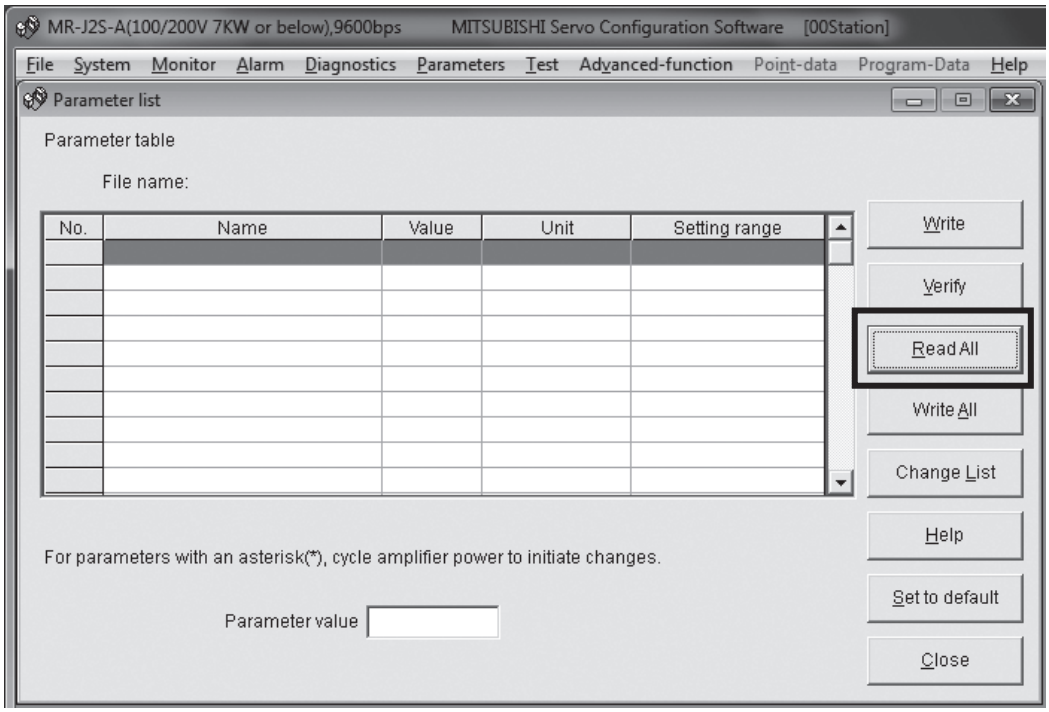

Change the setting value of [Pr. PA19 Parameter writing inhibit] to "000E" and click the [Write] button.
Then turn off/on the power of the servo amplifier.
Click the [Read All] button again to extend the display range of parameter numbers and display the parameters in the list of parameters.

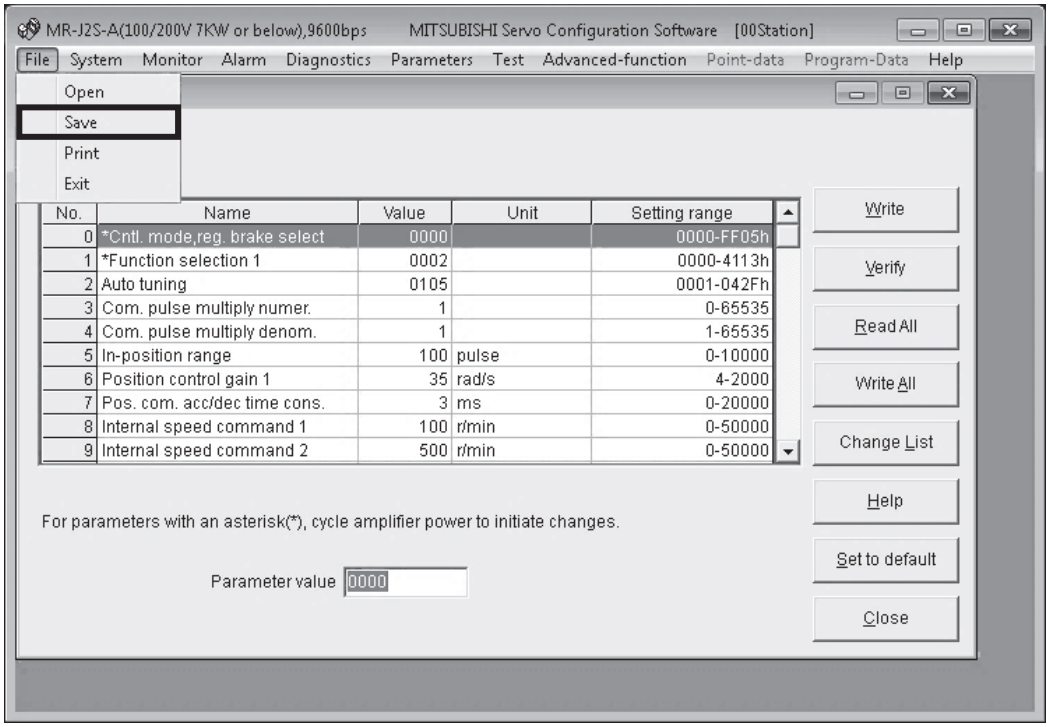

After reading the parameters is completed, Select [File] - [Save] to save the parameter file.
(The work with the setup software (MRZJW3-SETUP161E) is finished.)

2.3.4 Converting the parameters of MR-J2S-_A_/MR-J2S-_CP_/MR-J2S-_CL_ and writing them to the MR-J4-_A_(-RJ) servo amplifier

(1) Start MR Configurator2 (SW1DNC-MRC2-E).

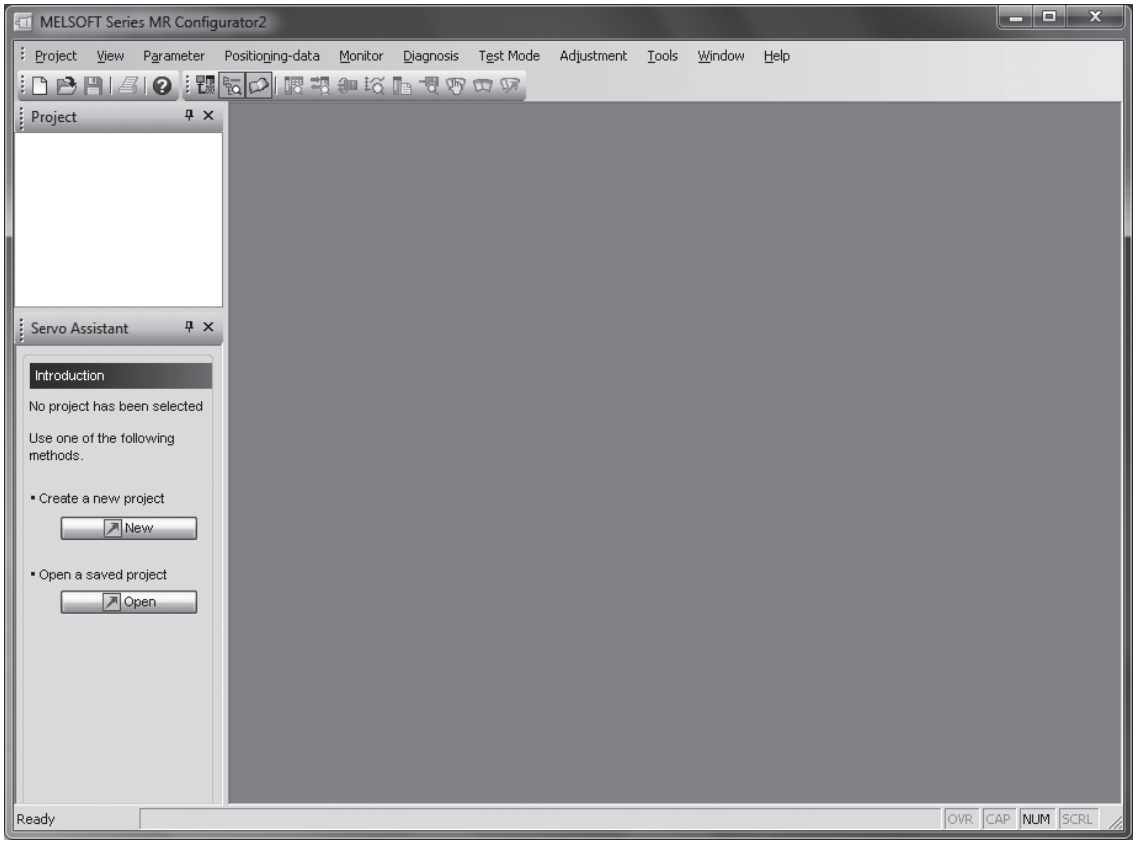

(2) Create a new project.
Select [Project] - [New] from the menu to display the New Project dialog box. Select "MR-J4-A(-RJ)" for Model.

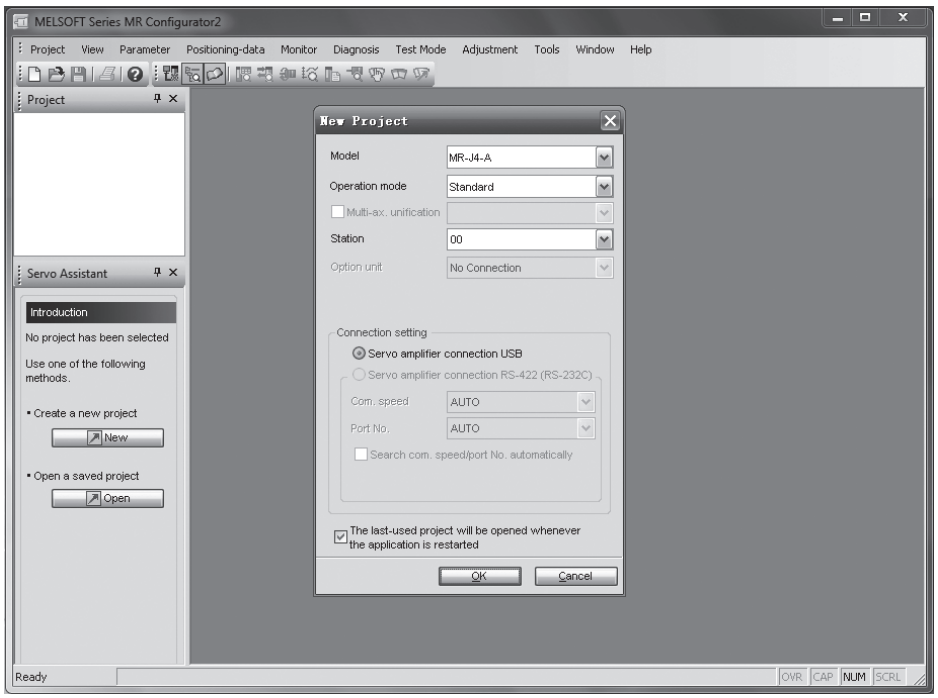

(3) Change MR-J2S-_A_/MR-J2S-_CP_/MR-J2S-_CL_ parameters to MR-J4-_A_(-RJ) parameters.
Select [Parameter] - [Parameter Converter] from the menu to display the parameter converter screen.
Then click the [Open file] button and specify the user file that was saved with the setup software (MRZJW3-SETUP161E) with the operation in (3) of Section 2.3.3.

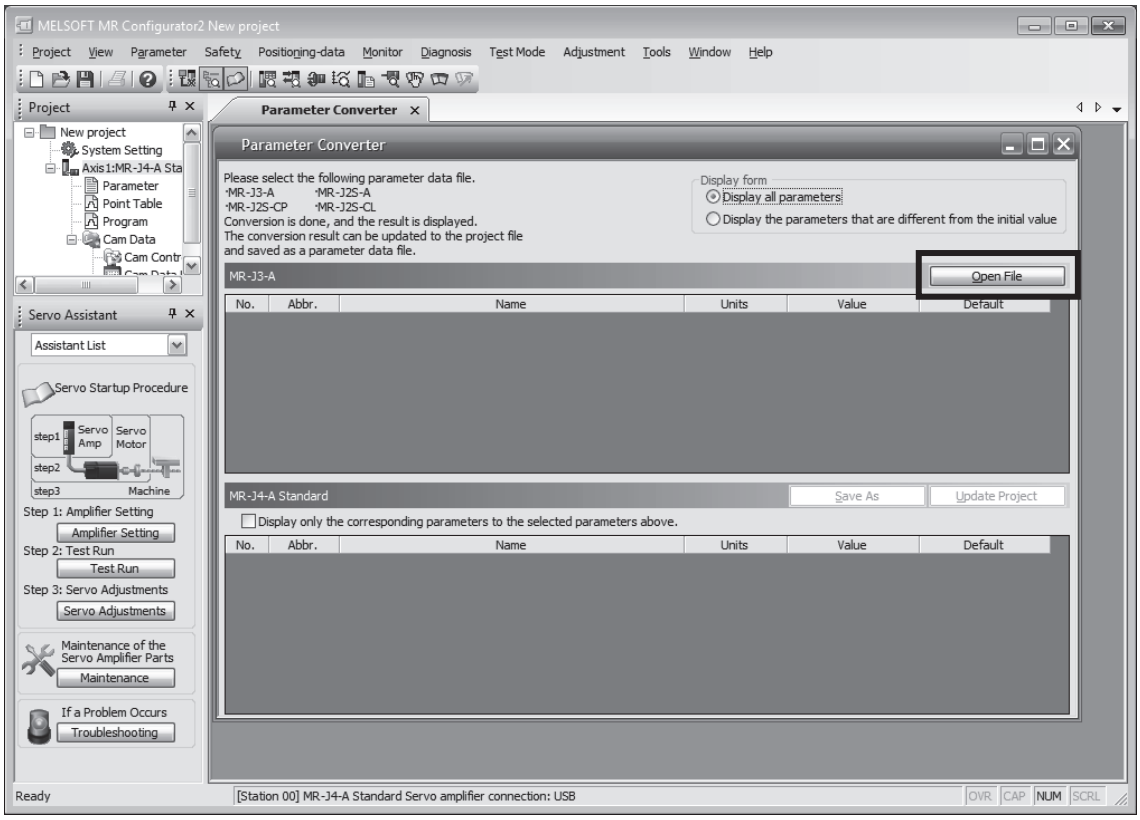

Designate the source model, since the Model Selection window appears when a user file is designated.

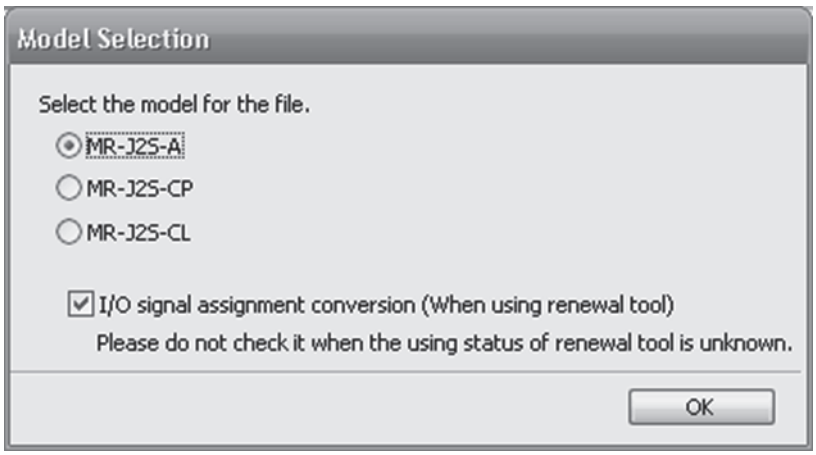

Click [Update Project].

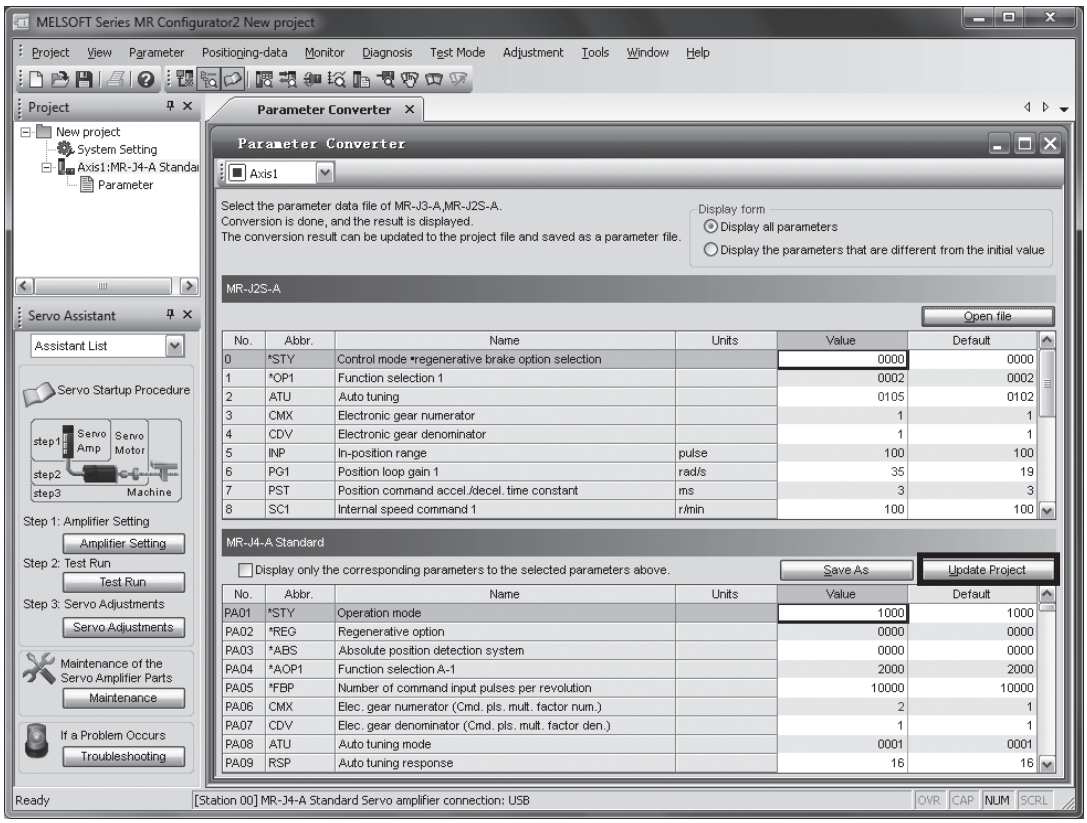

(4) Write the changed parameters to the MR-J4-_A_(-RJ) servo amplifier.
Select [Parameter] - [Parameter Setting] from the menu to display the parameter setting screen.
Connect the MR-J4-_A_(-RJ) servo amplifier to a personal computer and click the [Single Axis Write] button. The parameter values will be written to the MR-J4-_A_(-RJ) servo amplifier.

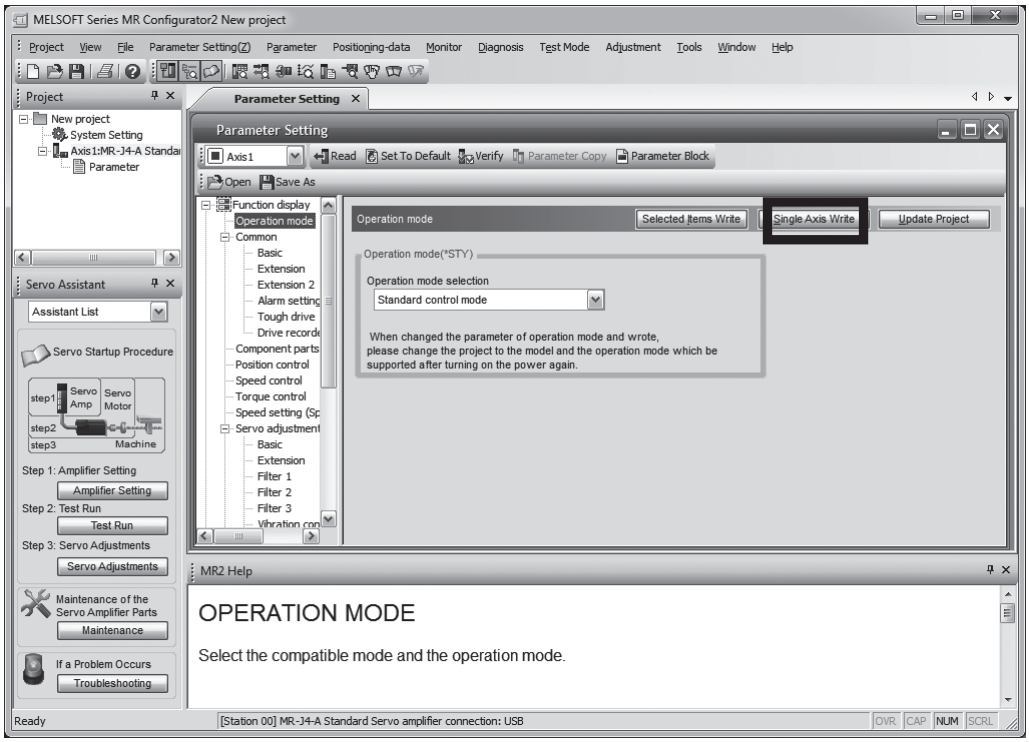

Note: The servo gain is not perfectly equal.

Refer to the MR Configurator2 (SW1DNC-MRC2-E) help for details.

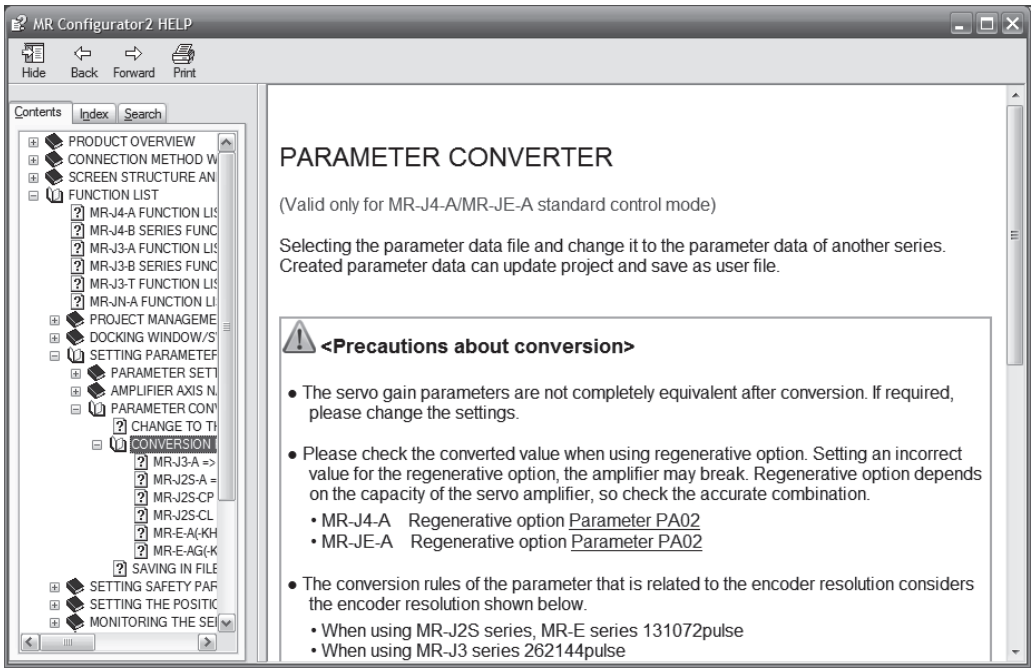

2.3.5 Conversion rules

POINT

- The conversion rules in this section give due consideration to compatibility. However, the servo parameter system of MR-J2S-_A_/ MR-J2S-_CP_/MR-J2S-_CL_ and that of MR-J4-_A_ are so different that the rules may not sufficiently apply to cases of special operation (including special specifications). Change the settings as necessary in such cases.
- The value of [Pr. PA19 Parameter writing inhibit] after parameter conversion is the initial value.
  - MR-J4-_A_: [Pr. PA19] = "00AAh"
- When using analog monitor output, perform an operation check because MR-J2S-_A_/MR-J2S-_CP_/MR-J2S-_CL_ and MR-J4-_A_ have different output voltage specifications for droop pulses.
  - MR-J4-_A_: [Pr. PC14]/[Pr. PC15]
- Various offset parameters cannot be converted. Change the settings as necessary.
  - MR-J4-_A_: [Pr. PC37] to [Pr. PC40]
- When the renewal tool is not used, set the conversion of I/O signal assignment with the parameter converter function to "Disabled". Change the settings or wiring as necessary because the parameters related to I/O signal assignment are not converted.
  When the renewal tool is used, set the conversion of I/O signal assignment with the parameter converter function to "Enabled". According to the control signal connection of the renewal tool, the parameters related to I/O signal assignment are converted. (For details, refer to section 2.3.5 (1).)
  - MR-J4-_A_: [Pr. PD03] to [Pr. PD28]
- The following parameters of MR-J4-_A_ are compatible with the servo amplifier's software version A3 or later. The software version can be checked in the system configuration.
  - MR-J4-_A_: [Pr. PC21 RS-422 communication function selection]
- The conversion rules apply only to the common parameters of MR-J2S-_A_/MR-J2S-_CP_/MR-J2S-_CL_ and MR-J4-_A_(-RJ).
  Additional parameters of MR-J4-_A_(-RJ) are set to the initial values of MR-J4-_A_(-RJ).
- The parameter conversion rules are intended for the replacement of "HC-_FS/HA-_FS motors" with "HG motors". When using "HC-_FS/HA-_FS motors" without being replaced, check and change the "electronic gear setting" and "pulse output". (Refer to (5) in Section 2.3.5 and 4. HC-_FS/HA-_FS MOTOR DRIVE.)

(1) Conversion with the renewal tool

POINT
●I/O signal assignment can be converted with MR Configurator2 of version 1.53F or later. ●I/O signal assignment cannot be converted with the parameter converter function because the renewal tool is not available for MR-J2S-_CL_.

When MR-J2S series servo amplifiers are replaced with MR-J4 series servo amplifiers using the renewal tool, the parameters related to I/O signal assignment can be converted according to the control signal connection of the renewal tool when the conversion of I/O signal assignment with the parameter converter function is set to "Enabled".
However, the following restrictions may be applied depending on the model of servo amplifiers to be replaced.

1) Restrictions for MR-J2S-_A_
When the following function is used, you cannot use the renewal tool because there is no compatibility of signal connections of the renewal tool. Set the conversion of I/O signal assignment with the parameter converter function to "Disabled". Refer to Part 2 Section 3.3 "Comparison of Standard Connection Diagrams" and consider laying new cables or changing the parameter setting.

a) Alarm code output setting: [Pr. 49]

2) Restrictions for MR-J2S-_CP_
When the following function is used, you cannot use the renewal tool because there is no compatibility of signal connections of the renewal tool. Set the conversion of I/O signal assignment with the parameter converter function to "Disabled". Refer to Part 4 Section 3.3 "Comparison of Standard Connection Diagrams" and consider laying new cables or changing the parameter setting.

a) Alarm code output setting: [Pr. 59]
b) CN1A-19 pin setting (on the device assignment setting of the setup software (SETUP161E))

(2) Parameters that need to be checked after parameter conversion

Parameter number	Name	Initial value	Setting value	Description
PA04	Function selection A-1	2000h	0_ _ _h	Forced stop deceleration function selection To configure the same settings as those for MR-J2S-_A_/MR-J2S-_CP_/MR-J2S-_CL_, select "Forced stop deceleration function disabled (EM1)".
PA09	Auto tuning response	-	-	Auto tuning response setting Adjust the gain value again after the replacement.
PA11	Forward rotation torque limit	100.0	-	If using a servo motor different from the one that had been used before servo amplifier replacement, review the setting value of this servo parameter as necessary because the servo motor specifications are also different. The settings do not need to be changed if the servo motor is not replaced.
PA12	Reverse rotation torque limit	100.0	-	
PA15	Encoder output pulse	-	-	When the encoder output pulse setting is a dividing ratio setting, this must be adjusted to match the number of pulses per servo motor rotation. The parameter converter function converts MR-J2S-_A_/MR-J2S-_CP_/MR-J2S-_CL_ to 131072 [pulses] and MR-J4-_A_(-RJ) to 4194304 [pulses]. Restore this to the value of the model of the target servo amplifier to be replaced in the case of servo amplifier replacement.
PC14	Analog monitor 1 output	-	-	Not converted by the parameter converter function.
PC15	Analog monitor 2 output	-	-	Set the value as required.
PC35	Internal torque limit 2	100.0	-	If using a servo motor different from the one that had been used before servo amplifier replacement, review the setting value of this servo parameter as necessary because the servo motor specifications are also different. The settings do not need to be changed if the servo motor is not replaced.
PC37	Analog speed command offset/ Analog speed limit offset	-	-	Not converted by the parameter converter function. Set the value as required.
PC38	Analog torque command offset/ Analog torque limit offset	-	-	Set the value as required.
PC39	Analog monitor 1 offset	-	-	Set the value as required.
PC40	Analog monitor 2 offset	-	-	Set the value as required.
PD01	Input signal automatic on selection 1	-	1_ _ _h	EM2 (Forced stop 2)/EM1 (Forced stop 1) input signal automatic on Set this item only when converting the parameters of MR-J2S-_CP_/MR-J2S-_CL_. This setting is not required for conversion from MR-J2S_A_.
PD03 to PD28	I/O device selection	-	-	Not converted by the parameter converter function. For MR-J2S-_A_/MR-J2S-_CP_, this parameter can be converted according to the control signal connection of the renewal tool when conversion of I/O signal assignment is enabled. However, only MR Configurator2 of version 1.53F or later is available.
PD34	Function selection D-5	-	-	Alarm code output This parameter is not converted by the parameter converter function. Set the value as required.

Note 1. For items that have no setting values listed in the table, refer to "Part 2: Review on Replacement of MR-J2S-_A_ with MR-J4-_A_" and "Part 4: Review on Replacement of MR-J2S-_CP_/MR-J2S-_CL_ with MR-J4-_A_-RJ".

(3) Parameter that needs be set when the MR-J2S-_CP_ is replaced with the MR-J4-_A_-RJ
The following parameter needs to be set after the MR-J2S-_CP_ is replaced with the MR-J4-_A_-RJ.

Parameter number	Name	Initial value	Setting value	Description
PA01	Operation mode	1 0 0 0h	_ _ _ 6h	Select the servo amplifier control mode. Select the positioning mode (point table method). When MR Configurator2 of version 1.51D or later is used, this parameter will be converted by the parameter converter function. Thus, this setting is not required.

(4) Parameter that needs be set when the MR-J2S-_CL_ is replaced with the MR-J4-_A_-RJ
The following parameter needs to be set after the MR-J2S-_CL_ is replaced with the MR-J4-_A_-RJ.

Parameter number	Name	Initial value	Setting value	Description
PA01	Operation mode	1 0 0 0h	_ _ _ 7h	Select the servo amplifier control mode. Select the positioning mode (program method). When MR Configurator2 of version 1.51D or later is used, this parameter will be converted by the parameter converter function. Thus, this setting is not required.

(5) Parameters that need to be set when the HC/HA series servo motor is used without being replaced
1) When the model of a servo amplifier after replacement is MR-J4-_A_

Parameter number	Name	Initial value	Setting value	Description
PA05	Number of command input pulses per revolution	-	-	Number of command input pulses per revolution Use the initial value only after replacement of MR-J2S_A_. This setting is not required after replacement of MR-J2S_CP_/MR-J2S-_CL_.
PA06	Electronic gear numerator	-	-	When an electronic gear is used, the setting value needs to be changed. Set the electronic gear setting value of the existing servo amplifier. When a geared servo motor is replaced, the actual reduction ratio may differ before and after the replacement. If the ratio differs after the replacement, set the values considering the actual reduction ratio.
PA07	Electronic gear denominator	-	-	
PA09	Auto tuning response	-	-	Auto tuning response setting Adjust the gain value again after the replacement.
PA15	Encoder output pulses	-	-	When the output dividing ratio setting has been selected, use the value of an existing servo amplifier.
PA21	Function selection A-3	-	-	Electronic gear selection Use the initial value.
PC22	Function selection C-1 Encoder setting selection	-	_ 1 _ _	Select "1: MR-J2S compatible encoder setting".
PT14	Backlash compensation	-	-	Set the backlash compensation of the existing servo amplifier.

(6) Conversion rules (MR-J2S-_A_ => MR-J4-_A_)

The following table shows the parameter conversion rules from MR-J2S-_A_ to MR-J4-_A_.
Parameters not specified in the following table will be set to their initial values.

MR-J2S-_A_				MR-J4-_A_			Conversion rule
No.	Name	Type	Target	No.	Type	Target	
0	Control mode and regenerative option selection	Hex	_ _ _ X	PA01	Hex	_ _ _ X	The setting value will be maintained.
			XX_ _	PA02	Hex	_ _ XX	00_ _ will be changed to _ _ 00. 01_ _ will be changed to _ _ 01. 02_ _ will be changed to _ _ 02. 03_ _ will be changed to _ _ 03. 04_ _ will be changed to _ _ 04. 05_ _ will be changed to _ _ 05. 06_ _ will be changed to _ _ 06. 08_ _ will be changed to _ _ 08. 09_ _ will be changed to _ _ 09. 0E_ _ will be changed to _ _ FA. 82_ _ will be changed to _ _ 82. 83_ _ will be changed to _ _ 83. 84_ _ will be changed to _ _84. 85_ _ will be changed to _ _85. 87_ _ will be changed to _ _81. Otherwise, _ _ 00 will be set.
1	Function selection 1	Hex	X_ _ _	PA03	Hex	_ _ _ X	0_ _ _ will be changed to _ _ _ 0. 1_ _ _ will be changed to _ _ _ 1. Otherwise, _ _ _0 will be set.
			_ X _ _	PD27	Hex	_ _ XX	_0_ _ will be changed to _ _03. _1_ _ will be changed to _ _06. When conversion of I/O signal assignment is enabled, this parameter will be converted according to the control signal connection of the renewal tool. When conversion of I/O signal assignment is not enabled, the initial value will be used. This parameter can be used with MR Configurator2 of software version 1.53F or later.
			_ _ X _	PD24	Hex	_ _ XX	_ _0_ will be changed to _ _0C. (ZSP) _ _1_ will be changed to _ _05. (MBR) When conversion of I/O signal assignment is enabled, this parameter will be converted according to the control signal connection of the renewal tool. When conversion of I/O signal assignment is not enabled, the initial value will be used. This parameter can be used with MR Configurator2 of software version 1.53F or later.
			_ _ _ X	PD29	Hex	_ _ _ X	_ _ _ 1 will be changed to _ _ _ 2. _ _ _ 2 will be changed to _ _ _ 4. _ _ _ 3 will be changed to _ _ _ 4. Otherwise, the setting value will be maintained.

Hex: hexadecimal parameter; Dec: decimal parameter

MR-J2S-_A_				MR-J4-_A_			Conversion rule
No.	Name	Type	Target	No.	Type	Target	
2	Auto tuning	Hex	_ X_ _	PA08	Hex	_ _ _ X	_ 4_ _ will be changed to _ _ _ 3. Otherwise, the setting value will be maintained.
			_ _ _ X	PA09	Dec	-	_ _ _ 1 will be changed to 8. _ _ _ 2 will be changed to 11. _ _ _ 3 will be changed to 13. _ _ _ 4 will be changed to 14. _ _ _ 5 will be changed to 16. _ _ _ 6 will be changed to 18. _ _ _ 7 will be changed to 19. _ _ _ 8 will be changed to 21. _ _ _ 9 will be changed to 23. _ _ _ A will be changed to 25. _ _ _ B will be changed to 27. _ _ _ C will be changed to 28. _ _ _ D will be changed to 30. _ _ _ E will be changed to 32. _ _ _ F will be changed to 34. To use the HC/HA series servo motors without being replaced, refer to (5) in Section 2.3.5.
3	Electronic gear numerator (command pulse multiplication numerator)	Dec	-	PA05	Dec	-	(1) When the setting value of No. 3 is 0 (1-1) When the setting value of No. 4 is within the range of 1000 to 50000 PA05: The setting value of No. 4 will be maintained. PA06: The initial value will be used. PA07: The initial value will be set. PA21: 1 _ _ _ will be set. (1-2) When the setting value of No. 4 is outside the range of 1000 to 50000 PA05: The initial value will be set. PA06: 262144 will be set. PA07: The setting value of No. 4 will be maintained. PA21: 2 _ _ _ will be set. (2) When the setting value of No. 3 is other than 0 PA05: The initial value will be set. PA06: Twice the setting value of No. 3 will be set. PA07: The setting value of No. 4 will be maintained. PA21: 2 _ _ _ will be set. To use the HC/HA series servo motors without being replaced, refer to (5) in Section 2.3.5.
				PA06	Dec	-	
4	Electronic gear denominator (Command pulse multiplication denominator)	Dec	-	PA07	Dec	-	
				PA21	Hex	X_ _ _	
5	In-position range	Dec	-	PA10	Dec	-	The setting value will be maintained.
6	Position loop gain 1	Dec	-	PB07	Dec	-	The setting value will be multiplied by 2/3 and one decimal place will be added.
7	Position command acceleration/deceleration time constant (position smoothing)	Dec	-	PB03	Dec	-	The setting value will be maintained.
8	Internal speed command 1/internal speed limit 1	Dec	-	PC05	Dec	-	The setting value will be maintained.
9	Internal speed command 2/internal speed limit 2	Dec	-	PC06	Dec	-	The setting value will be maintained.
10	Internal speed command 3/internal speed limit 3	Dec	-	PC07	Dec	-	The setting value will be maintained.
11	Acceleration time constant	Dec	-	PC01	Dec	-	The setting value will be maintained.
12	Deceleration time constant	Dec	-	PC02	Dec	-	The setting value will be maintained.

Hex: hexadecimal parameter; Dec: decimal parameter

MR-J2S-_A_				MR-J4-_A_			Conversion rule
No.	Name	Type	Target	No.	Type	Target	
13	S-pattern acceleration/deceleration time constant	Dec	-	PC03	Dec	-	The setting value will be maintained.
14	Torque command time constant	Dec	-	PC04	Dec	-	The setting value will be maintained.
15	Station number setting	Dec	-	PC20	Dec	-	The setting value will be maintained.
16	Serial communication function selection - Alarm history clear	Hex	_ _ _ X	PC21	Hex	_ _ X_	The setting value will be maintained.
			_ _ X_	PC18	Hex	_ _ _ X	The setting value will be maintained.
			X_ _ _	PC21	Hex	_ X_ _	The setting value will be maintained.
17	Analog monitor output	Hex	_ _ _ X	PC14	Hex	_ _ _ X	_ _ _ 9 will be changed to _ _ _ 8. _ _ _ A will be changed to _ _ _ 9. _ _ _ B will be changed to _ _ _ D. Otherwise, the setting value will be maintained.
			_ X_ _	PC15	Hex	_ _ _ X	_ 9_ _ will be changed to _ _ _ 8. _ A _ _ will be changed to _ _ _ 9. _ B _ _ will be changed to _ _ _ D. Otherwise, the setting value will be maintained.
18	Status display selection	Hex	_ _ _ X	PC36	Hex	_ _ _ X	The setting value will be maintained.
			_ _ X_	PC36	Hex	_ X_ _	The setting value will be maintained.
20	Function selection 2	Hex	_ X_ _	PB24	Hex	_ _ _ X	The setting value will be maintained.
			_ _ X_	PC23	Hex	_ _ _ X	The setting value will be maintained.
21	Function selection 3 (command pulse selection)	Hex	_ _ XX	PA13	Hex	_ _ XX	The setting value will be maintained.
22	Function selection 4	Hex	_ X_ _	PC23	Hex	_ X_ _	The setting value will be maintained.
			_ _ _ X	PD30	Hex	_ _ _ X	The setting value will be maintained.
23	Feed forward gain	Dec	-	PB04	Dec	-	The setting value will be maintained.
24	Zero speed	Dec	-	PC17	Dec	-	The setting value will be maintained.
25	Analog speed command - Maximum speed Analog speed limit - Maximum speed	Dec	-	PC12	Dec	-	The setting value will be maintained.
26	Analog torque command maximum output	Dec	-	PC13	Dec	-	One decimal place will be added.
27	Encoder output pulses	Dec	-	PA15	Dec	-	(1) When the setting value of No. 54 is 1_ _ _ 32 times the setting value of No. 27 will be set. (2) When the setting value of No. 54 is other than 1_ _ _ the setting value of No. 27 will be maintained. To use the HC/HA series servo motors without being replaced, refer to (5) in Section 2.3.5.
54	Function selection 9	Hex	X_ _ _				
28	Internal torque limit 1	Dec	-	PA11	Dec	-	One decimal place will be added.
			-	PA12	Dec	-	One decimal place will be added.
33	Electromagnetic brake sequence output	Dec	-	PC16	Dec	-	The setting value will be maintained.
34	Load to motor inertia ratio	Dec	-	PB06	Dec	-	One decimal place will be added.
35	Position loop gain 2	Dec	-	PB08	Dec	-	One decimal place will be added.
37	Speed loop gain 2	Dec	-	PB09	Dec	-	The setting value will be maintained.
38	Speed integral compensation	Dec	-	PB10	Dec	-	One decimal place will be added.
39	Speed differential compensation	Dec	-	PB11	Dec	-	The setting value will be maintained.

Hex: hexadecimal parameter; Dec: decimal parameter

MR-J2S-_A_				MR-J4-_A_			Conversion rule
No.	Name	Type	Target	No.	Type	Target	
41	Input signal automatic ON selection	Hex	_ _ _ X	PD01	Hex	_ _ _ X	_ _ _ 0 will be changed to _ _ _ 0. _ _ _ 1 will be changed to _ _ _ 4. Otherwise, the initial value will be set.
			_ XX_	PD01	Hex	_ X_ _	_ 00_ will be changed to _ 0 _ _. _ 01_ will be changed to _ 4 _ _. _ 10_ will be changed to _ 8 _ _. _ 11_ will be changed to _ C _ _. Otherwise, the initial value will be set.
42	Input signal selection 1	Hex	_ _ X_	PD32	Hex	_ _ _ X	The setting value will be maintained.
			_ _ _ X	PD03	Hex	XXXX	(1) Only when the setting value of No. 0 is _ _ _ 1, _ _ _ 3, or _ _ _ 5, this parameter will be converted as follows: (LOP signal) (1-1) When the setting value of No. 42 is _ _ _ 0 (CN1B-5) PD03: 2323 PD04: _ _23 (CN1-15 pin setting) (1-2) When the setting value of No. 42 is _ _ _ 1 (CN1B-14) PD11: 2323 PD12: _ _23 (CN1-19 pin setting) (1-3) When the setting value of No. 42 is _ _ _ 2 (CN1A-8) PD13: 2323 PD14: _ _23 (CN1-41 pin setting) (1-4) When the setting value of No. 42 is _ _ _ 3 (CN1B-7) PD05: 2323 PD06: _ _23 (CN1-16 pin setting) (1-5) When the setting value of No. 42 is _ _ _ 4 (CN1B-8) PD07: 2323 PD08: _ _23 (CN1-17 pin setting) (1-6) When the setting value of No. 42 is _ _ _ 5 (CN1B-9) PD09: 2323 PD10: _ _23 (CN1-18 pin setting) When conversion of I/O signal assignment is enabled, these parameters will be converted according to the control signal connection of the renewal tool. When conversion of I/O signal assignment is not enabled, the initial value will be used. This parameter can be used with MR Configurator2 of software version 1.53F or later.
				PD04	Hex	_ _ XX	
				PD11	Hex	XXXX	
				PD12	Hex	_ _ XX	
				PD13	Hex	XXXX	
				PD14	Hex	_ _ XX	
				PD05	Hex	XXXX	
				PD06	Hex	_ _ XX	
				PD07	Hex	XXXX	
				PD08	Hex	_ _ XX	
				PD09	Hex	XXXX	
				PD10	Hex	_ _ XX	

Hex: hexadecimal parameter; Dec: decimal parameter

MR-J2S-_A_				MR-J4-_A_			Conversion rule
No.	Name	Type	Target	No.	Type	Target	
43	Input signal selection 2	Hex	_ _ _ X	PD03	Hex	_ _ XX	When the setting value of No. 0 is _ _ _ 0, _ _ _ 2, or _ _ _ 4 or when the value of No. 42 is other than _ _ _ 0, this parameter will be converted. The setting value will be converted as shown in Table 1 (as input) in Section 2.3.5 (6). However, a setting value other than those in Table 1 (as input) in Section 2.3.5 (6) will be converted to _ _02. (SON) When conversion of I/O signal assignment is enabled, this parameter will be converted according to the control signal connection of the renewal tool. When conversion of I/O signal assignment is not enabled, the initial value will be used. This parameter can be used with MR Configurator2 of software version 1.53F or later.
			_ _ X _			XX _ _	When the setting value of No. 0 is _ _ _ 0, _ _ _ 2, or _ _ _ 4 or when the value of No. 42 is other than _ _ _ 0, this parameter will be converted. The setting value will be converted as shown in Table 2 (as input) in Section 2.3.5 (6). However, a setting value other than those in Table 2 (as input) in Section 2.3.5 (6) will be converted to 02_ _. (SON) When conversion of I/O signal assignment is enabled, this parameter will be converted according to the control signal connection of the renewal tool. When conversion of I/O signal assignment is not enabled, the initial value will be used. This parameter can be used with MR Configurator2 of software version 1.53F or later.
		Hex	_ X _ _	PD04	Hex	_ _ XX	When the setting value of No. 0 is _ _ _ 0, _ _ _ 2, or _ _ _ 4 or when the value of No. 42 is other than _ _ _ 0, this parameter will be converted. The setting value will be converted as shown in Table 3 (as input) in Section 2.3.5 (6). However, a setting value other than those in Table 3 (as input) in Section 2.3.5 (6) will be converted to _ _02. (SON) When conversion of I/O signal assignment is enabled, this parameter will be converted according to the control signal connection of the renewal tool. When conversion of I/O signal assignment is not enabled, the initial value will be used. This parameter can be used with MR Configurator2 of software version 1.53F or later.

Hex: hexadecimal parameter; Dec: decimal parameter

MR-J2S-_A_				MR-J4-_A_			Conversion rule
No.	Name	Type	Target	No.	Type	Target	
44	Input signal selection 3	Hex	_ _ _ X	PD11	Hex	_ _ XX	When the setting value of No. 0 is _ _ _ 0, _ _ _ 2, or _ _ _ 4 or when the value of No. 42 is other than _ _ _ 1, this parameter will be converted. The setting value will be converted as shown in Table 1 (as input) in Section 2.3.5 (6). However, a setting value other than those in Table 1 (as input) in (6) in 2.3.5 will be converted to _ _03. (RES) When conversion of I/O signal assignment is enabled, this parameter will be converted according to the control signal connection of the renewal tool. When conversion of I/O signal assignment is not enabled, the initial value will be used. This parameter can be used with MR Configurator2 of software version 1.53F or later.
			_ _ X _			XX _ _	When the setting value of No. 0 is _ _ _ 0, _ _ _ 2, or _ _ _ 4 or when the value of No. 42 is other than _ _ _ 1, this parameter will be converted. The setting value will be converted as shown in Table 2 (as input) in Section 2.3.5 (6). However, a setting value other than those in Table 2 (as input) in Section 2.3.5 (6) will be converted to 03_ _. (RES) When conversion of I/O signal assignment is enabled, this parameter will be converted according to the control signal connection of the renewal tool. When conversion of I/O signal assignment is not enabled, the initial value will be used. This parameter can be used with MR Configurator2 of software version 1.53F or later.
		Hex	_ X _ _	PD12	Hex	_ _ XX	When the setting value of No. 0 is _ _ _ 0, _ _ _ 2, or _ _ _ 4 or when the value of No. 42 is other than _ _ _ 1, this parameter will be converted. The setting value will be converted as shown in Table 3 (as input) in Section 2.3.5 (6). However, a setting value other than those in Table 3 (as input) in (6) in 2.3.5 will be converted to _ _03. (RES) When conversion of I/O signal assignment is enabled, this parameter will be converted according to the control signal connection of the renewal tool. When conversion of I/O signal assignment is not enabled, the initial value will be used. This parameter can be used with MR Configurator2 of software version 1.53F or later.

Hex: hexadecimal parameter; Dec: decimal parameter

MR-J2S-_A_				MR-J4-_A_			Conversion rule
No.	Name	Type	Target	No.	Type	Target	
45	Input signal selection 4	Hex	_ _ _ X	PD13	Hex	_ _ XX	When the setting value of No. 0 is _ _ _ 0, _ _ _ 2, or _ _ _ 4 or when the value of No. 42 is other than _ _ _ 2, this parameter will be converted. The setting value will be converted as shown in Table 1 (as input) in Section 2.3.5 (6). However, a setting value other than those in Table 1 (as input) in Section 2.3.5 (6) will be converted to _ _06. (CR) When conversion of I/O signal assignment is enabled, this parameter will be converted according to the control signal connection of the renewal tool. When conversion of I/O signal assignment is not enabled, the initial value will be used. This parameter can be used with MR Configurator2 of software version 1.53F or later.
			_ _ X _			XX _ _	When the setting value of No. 0 is _ _ _ 0, _ _ _ 2, or _ _ _ 4 or when the value of No. 42 is other than _ _ _ 2, this parameter will be converted. The setting value will be converted as shown in Table 2 (as input) in Section 2.3.5 (6). However, a setting value other than those in Table 2 (as input) in Section 2.3.5 (6) will be converted to 20_ _. (SP1) When conversion of I/O signal assignment is enabled, this parameter will be converted according to the control signal connection of the renewal tool. When conversion of I/O signal assignment is not enabled, the initial value will be used. This parameter can be used with MR Configurator2 of software version 1.53F or later.
		Hex	_ X _ _		Hex	_ _ XX	When the setting value of No. 0 is _ _ _ 0, _ _ _ 2, or _ _ _ 4 or when the value of No. 42 is other than _ _ _ 2, this parameter will be converted. The setting value will be converted as shown in Table 3 (as input) in Section 2.3.5 (6). However, a setting value other than those in Table 3 (as input) in Section 2.3.5 (6) will be converted to _ _20. (SP1) When conversion of I/O signal assignment is enabled, this parameter will be converted according to the control signal connection of the renewal tool. When conversion of I/O signal assignment is not enabled, the initial value will be used. This parameter can be used with MR Configurator2 of software version 1.53F or later.

Hex: hexadecimal parameter; Dec: decimal parameter

MR-J2S-_A_				MR-J4-_A_			Conversion rule
No.	Name	Type	Target	No.	Type	Target	
46	Input signal selection 5	Hex	_ _ _ X	PD05	Hex	_ _ XX	When the setting value of No. 0 is _ _ _ 0, _ _ _ 2, or _ _ _ 4 or when the value of No. 42 is other than _ _ _ 3, this parameter will be converted. The setting value will be converted as shown in Table 1 (as input) in Section 2.3.5 (6). However, a setting value other than those in Table 1 (as input) in Section 2.3.5 (6) will be converted to _ _00. (No assignment function) When conversion of I/O signal assignment is enabled, this parameter will be converted according to the control signal connection of the renewal tool. When conversion of I/O signal assignment is not enabled, the initial value will be used. This parameter can be used with MR Configurator2 of software version 1.53F or later.
			_ _ X _			XX _ _	When the setting value of No. 0 is _ _ _ 0, _ _ _ 2, or _ _ _ 4 or when the value of No. 42 is other than _ _ _ 3, this parameter will be converted. The setting value will be converted as shown in Table 2 (as input) in Section 2.3.5 (6). However, a setting value other than those in Table 2 (as input) in Section 2.3.5 (6) will be converted to 21_ _. (SP2) When conversion of I/O signal assignment is enabled, this parameter will be converted according to the control signal connection of the renewal tool. When conversion of I/O signal assignment is not enabled, the initial value will be used. This parameter can be used with MR Configurator2 of software version 1.53F or later.
		Hex	_ X _ _	PD06	Hex	_ _ XX	When the setting value of No. 0 is _ _ _ 0, _ _ _ 2, or _ _ _ 4 or when the value of No. 42 is other than _ _ _ 3, this parameter will be converted. The setting value will be converted as shown in Table 3 (as input) in Section 2.3.5 (6). However, a setting value other than those in Table 3 (as input) in Section 2.3.5 (6) will be converted to _ _21. (SP2) When conversion of I/O signal assignment is enabled, this parameter will be converted according to the control signal connection of the renewal tool. When conversion of I/O signal assignment is not enabled, the initial value will be used. This parameter can be used with MR Configurator2 of software version 1.53F or later.

Hex: hexadecimal parameter; Dec: decimal parameter

MR-J2S-_A_				MR-J4-_A_			Conversion rule
No.	Name	Type	Target	No.	Type	Target	
47	Input signal selection	Hex	_ _ _ X	PD07	Hex	_ _ XX	When the setting value of No. 0 is _ _ _ 0, _ _ _ 2, or _ _ _ 4 or when the value of No. 42 is other than _ _ _ 4, this parameter will be converted. The setting value will be converted as shown in Table 1 (as input) in Section 2.3.5 (6). However, a setting value other than those in Table 1 (as input) in Section 2.3.5 (6) will be converted to _ _04. (PC) When conversion of I/O signal assignment is enabled, this parameter will be converted according to the control signal connection of the renewal tool. When conversion of I/O signal assignment is not enabled, the initial value will be used. This parameter can be used with MR Configurator2 of software version 1.53F or later.
			_ _ X _			XX _ _	When the setting value of No. 0 is _ _ _ 0, _ _ _ 2, or _ _ _ 4 or when the value of No. 42 is other than _ _ _ 4, this parameter will be converted. The setting value will be converted as shown in Table 2 (as input) in Section 2.3.5 (6). However, a setting value other than those in Table 2 (as input) in Section 2.3.5 (6) will be converted to 07_ _. (ST1) When conversion of I/O signal assignment is enabled, this parameter will be converted according to the control signal connection of the renewal tool. When conversion of I/O signal assignment is not enabled, the initial value will be used. This parameter can be used with MR Configurator2 of software version 1.53F or later.
		Hex	_ X _ _	PD08	Hex	_ _ XX	When the setting value of No. 0 is _ _ _ 0, _ _ _ 2, or _ _ _ 4 or when the value of No. 42 is other than _ _ _ 4, this parameter will be converted. The setting value will be converted as shown in Table 3 (as input) in Section 2.3.5 (6). However, a setting value other than those in Table 3 (as input) in Section 2.3.5 (6) will be converted to _ _07. (RS2) When conversion of I/O signal assignment is enabled, this parameter will be converted according to the control signal connection of the renewal tool. When conversion of I/O signal assignment is not enabled, the initial value will be used. This parameter can be used with MR Configurator2 of software version 1.53F or later.

Hex: hexadecimal parameter; Dec: decimal parameter

MR-J2S-_A_				MR-J4-_A_			Conversion rule
No.	Name	Type	Target	No.	Type	Target	
48	Input signal selection 7	Hex	_ _ _ X	PD09	Hex	_ _ XX	When the setting value of No. 0 is _ _ _ 0, _ _ _ 2, or _ _ _ 4 or when the value of No. 42 is other than _ _ _ 5, this parameter will be converted. The setting value will be converted as shown in Table 1 (as input) in Section 2.3.5 (6). However, a setting value other than those in Table 1 (as input) in Section 2.3.5 (6) will be converted to _ _05. (TL) When conversion of I/O signal assignment is enabled, this parameter will be converted according to the control signal connection of the renewal tool. When conversion of I/O signal assignment is not enabled, the initial value will be used. This parameter can be used with MR Configurator2 of software version 1.53F or later.
			_ _ X _			XX _ _	When the setting value of No. 0 is _ _ _ 0, _ _ _ 2, or _ _ _ 4 or when the value of No. 42 is other than _ _ _ 5, this parameter will be converted. The setting value will be converted as shown in Table 2 (as input) in Section 2.3.5 (6). However, a setting value other than those in Table 2 (as input) in Section 2.3.5 (6) will be converted to 08_ _. (ST2) When conversion of I/O signal assignment is enabled, this parameter will be converted according to the control signal connection of the renewal tool. When conversion of I/O signal assignment is not enabled, the initial value will be used. This parameter can be used with MR Configurator2 of software version 1.53F or later.
		Hex	_ X _ _	PD10	Hex	_ _ XX	When the setting value of No. 0 is _ _ _ 0, _ _ _ 2, or _ _ _ 4 or when the value of No. 42 is other than _ _ _ 5, this parameter will be converted. The setting value will be converted as shown in Table 3 (as input) in Section 2.3.5 (6). However, a setting value other than those in Table 3 (as input) in Section 2.3.5 (6) will be converted to _ _08. (RS1) When conversion of I/O signal assignment is enabled, this parameter will be converted according to the control signal connection of the renewal tool. When conversion of I/O signal assignment is not enabled, the initial value will be used. This parameter can be used with MR Configurator2 of software version 1.53F or later.

Hex: hexadecimal parameter; Dec: decimal parameter

MR-J2S-_A_				MR-J4-_A_			Conversion rule
No.	Name	Type	Target	No.	Type	Target	
49	Output signal selection 1	Hex	_ X_ _	PD28	Hex	_ _ XX	BWNG (battery warning) signal assignment will be converted. (1) When the setting value of No. 49 is _ 1 _ _ (CN1A-19), the setting value of PD28 will be converted to _ _ 09 (CN1-49 pin setting). (2) Only when the setting value of No. 1 is _ 0 _ _ (CN1B-18 is the initial value ALM), this parameter will be converted. When the setting value of No. 49 is _ 2 _ _ (CN1B-18), the setting value of PD27 will be converted to _ _ 09. (3) When the setting value of No. 49 is _ 3 _ _ (CN1A-18), the setting value of PD23 will be converted to _ _ 09 (CN1-22 pin setting). (4) Only when the setting value of No. 1 is _ _ 0 _ (CN1B-19 is the initial value ZSP), this parameter will be converted. When the setting value of No. 49 is _ 4 _ _ (CN1B-19), the setting value of PD24 will be converted to _ _ 09 (CN1-23 pin setting). (5) When the setting value of No. 49 is _ 5 _ _ (CN1B-6), the setting value of PD26 will be converted to _ _ 09 (CN1-25 pin setting). Otherwise, the initial value will be set. When conversion of I/O signal assignment is enabled, these parameters will be converted according to the control signal connection of the renewal tool. When conversion of I/O signal assignment is not enabled, the initial value will be used. This parameter can be used with MR Configurator2 of software version 1.53F or later.
				PD23	Hex	_ _ XX	
				PD24	Hex	_ _ XX	
				PD27	Hex	_ _ XX	
				PD26	Hex	_ _ XX	
		Hex	_ _ X _	PD28	Hex	_ _ XX	WNG (warning) signal assignment will be converted. (1) When the setting value of No. 49 is _ _ 1 _ (CN1A-19), the setting value of PD28 will be converted to _ _ 08 (CN1-49 pin setting). (2) Only when the setting value of No. 1 is _ 0 _ _ (CN1B-18 is the initial value ALM), this parameter will be converted. When the setting value of No. 49 is _ _ 2 _ (CN1B-18), the setting value of PD27 will be converted to _ _ 08. (3) When the setting value of No. 49 is _ _ 3 _ (CN1A-18), the setting value of PD23 will be converted to _ _ 08 (CN1-22 pin setting). (4) Only when the setting value of No. 1 is _ _ 0 _ (CN1B-19 is the initial value ZSP), this parameter will be converted. When the setting value of No. 49 is _ _ 4 _ (CN1B-19), the setting value of PD24 will be converted to _ _ 08 (CN1-23 pin setting). (5) When the setting value of No. 49 is _ _ 5 _ (CN1B-6), the setting value of PD26 will be converted to _ _ 08 (CN1-25 pin setting). Otherwise, the initial value will be set. When conversion of I/O signal assignment is enabled, these parameters will be converted according to the control signal connection of the renewal tool. When conversion of I/O signal assignment is not enabled, the initial value will be used. This parameter can be used with MR Configurator2 of software version 1.53F or later.
				PD23	Hex	_ _ XX	
				PD24	Hex	_ _ XX	
				PD27	Hex	_ _ XX	
				PD26	Hex	_ _ XX	
		Hex	_ _ _X	-	-	-	The setting value will not be maintained. (Alarm code output setting)

Hex: hexadecimal parameter; Dec: decimal parameter

MR-J2S-_A_				MR-J4-_A_			Conversion rule
No.	Name	Type	Target	No.	Type	Target	
51	Function selection 6	Hex	_ X_ _	PD30	Hex	_ _ X_	The setting value will be maintained.
54	Function selection 9	Hex	_ _ _ X	PA14	Dec	-	The hexadecimal number is converted to decimal.
			XX_ _	PC19	Hex	_ _ XX	The setting value will be maintained.
55	Function selection A	Hex	_ _ X_	PB25	Hex	_ _ X_	The setting value will be maintained.
58	Machine resonance suppression filter 1	Hex	_ _ XX	PB01	Hex	_ _ _ X	_ _ 00 will be changed to _ _ _ 0. Otherwise, _ _ _ 2 will be set.
			_ _ XX	PB13	Dec	-	_ _ 00 will be changed to 4500. _ _ 01 will be changed to 4500. _ _ 02 will be changed to 2250. _ _ 03 will be changed to 1500. _ _ 04 will be changed to 1125. _ _ 05 will be changed to 900. _ _ 06 will be changed to 750. _ _ 07 will be changed to 643. _ _ 08 will be changed to 563. _ _ 09 will be changed to 500. _ _ 0A will be changed to 450. _ _ 0B will be changed to 409. _ _ 0C will be changed to 375. _ _ 0D will be changed to 346. _ _ 0E will be changed to 321. _ _ 0F will be changed to 300. _ _ 10 will be changed to 281. _ _ 11 will be changed to 265. _ _ 12 will be changed to 250. _ _ 13 will be changed to 237. _ _ 14 will be changed to 225. _ _ 15 will be changed to 214. _ _ 16 will be changed to 205. _ _ 17 will be changed to 196. _ _ 18 will be changed to 188. _ _ 19 will be changed to 180. _ _ 1A will be changed to 173. _ _ 1B will be changed to 167. _ _ 1C will be changed to 160. _ _ 1D will be changed to 155. _ _ 1E will be changed to 150. _ _ 1F will be changed to 145.
			_ X_ _	PB14	Hex	_ _ X_	The setting value will be maintained.

Hex: hexadecimal parameter; Dec: decimal parameter

MR-J2S-_A_				MR-J4-_A_			Conversion rule
No.	Name	Type	Target	No.	Type	Target	
59	Machine resonance suppression filter 2	Hex	_ _ XX	PB15	Dec	-	_ _ 00 will be changed to 4500. _ _ 01 will be changed to 4500. _ _ 02 will be changed to 2250. _ _ 03 will be changed to 1500. _ _ 04 will be changed to 1125. _ _ 05 will be changed to 900. _ _ 06 will be changed to 750. _ _ 07 will be changed to 643. _ _ 08 will be changed to 563. _ _ 09 will be changed to 500. _ _ 0A will be changed to 450. _ _ 0B will be changed to 409. _ _ 0C will be changed to 375. _ _ 0D will be changed to 346. _ _ 0E will be changed to 321. _ _ 0F will be changed to 300. _ _ 10 will be changed to 281. _ _ 11 will be changed to 265. _ _ 12 will be changed to 250. _ _ 13 will be changed to 237. _ _ 14 will be changed to 225. _ _ 15 will be changed to 214. _ _ 16 will be changed to 205. _ _ 17 will be changed to 196. _ _ 18 will be changed to 188. _ _ 19 will be changed to 180. _ _ 1A will be changed to 173. _ _ 1B will be changed to 167. _ _ 1C will be changed to 160. _ _ 1D will be changed to 155. _ _ 1E will be changed to 150. _ _ 1F will be changed to 145.
				PB16	Hex	_ _ _ X	_ _ 00 will be changed to _ _ _ 0. Otherwise, _ _ _ 1 will be set.
			_ X_ _	PB16	Hex	_ _ X_	The setting value will be maintained.
60	Low-pass filter/adaptive vibration suppression control	Hex	_ _ X_	PB18	Dec	-	_ _ 1 _ will be changed to 18000. Otherwise, the initial value will be set.
				PB23	Hex	_ _ X_	The setting value will be maintained.
61	Load to motor inertia ratio 2	Dec	-	PB29	Dec	-	One decimal place will be added.
35	Position loop gain 2	Dec	-	PB30	Dec	-	The value will be (No. 35) × (No. 62) ÷ 100. One decimal place will be added.
62	Position loop gain 2 change ratio	Dec	-				
37	Speed loop gain 2	Dec	-	PB31	Dec	-	The value will be (No. 37) × (No. 63) ÷ 100.
63	Speed loop gain 2 change ratio	Dec	-				
38	Speed integral compensation	Dec	-	PB32	Dec	-	One decimal place will be added to (No. 38) × (No. 64) ÷ 100. The above value will be clamped at 5000.0.
64	Speed integral compensation change ratio	Dec	-				
65	Gain switching selection	Hex	_ _ _ X	PB26	Hex	_ _ _ X	The setting value will be maintained.
66	Gain switching condition	Dec	-	PB27	Dec	-	The setting value will be maintained.
67	Gain switching time constant	Dec	-	PB28	Dec	-	The setting value will be maintained.
69	Command pulse multiplication numerator 2	Dec	-	PC32	Dec	-	0 will be changed to 4194304. Otherwise, the setting value will be maintained.
70	Command pulse multiplication numerator 3	Dec	-	PC33	Dec	-	0 will be changed to 4194304. Otherwise, the setting value will be maintained.
71	Command pulse multiplication numerator 4	Dec	-	PC34	Dec	-	0 will be changed to 4194304. Otherwise, the setting value will be maintained.
72	Internal speed command 4/internal speed limit 4	Dec	-	PC08	Dec	-	The setting value will be maintained.

Hex: hexadecimal parameter; Dec: decimal parameter

MR-J2S-_A_				MR-J4-_A_			Conversion rule
No.	Name	Type	Target	No.	Type	Target	
73	Internal speed command 5/internal speed limit 5	Dec	-	PC09	Dec	-	The setting value will be maintained.
74	Internal speed command 6/internal speed limit 6	Dec	-	PC10	Dec	-	The setting value will be maintained.
75	Internal speed command 7/internal speed limit 7	Dec	-	PC11	Dec	-	The setting value will be maintained.
76	Internal torque limit 2	Dec	-	PC35	Dec	-	One decimal place will be added.

Hex: hexadecimal parameter; Dec: decimal parameter

Table 1 Input conversion rules (for the least significant digit)

_ _ _0 will be changed to _ _00.
_ _ _1 will be changed to _ _02.
_ _ _2 will be changed to _ _03.
_ _ _3 will be changed to _ _04.
_ _ _4 will be changed to _ _05.
_ _ _5 will be changed to _ _06.
_ _ _B will be changed to _ _24.
_ _ _C will be changed to _ _25.
_ _ _D will be changed to _ _09.
_ _ _E will be changed to _ _0D.

Table 2 Input conversion rules (for the second digit from the least significant digit)

_ _0_ will be changed to 00_ _.
_ _1_ will be changed to 02_ _.
_ _2_ will be changed to 03_ _.
_ _3_ will be changed to 04_ _.
_ _4_ will be changed to 05_ _.
_ _6_ will be changed to 20_ _.
_ _7_ will be changed to 21_ _.
_ _8_ will be changed to 07_ _.
_ _9_ will be changed to 08_ _.
_ _A_ will be changed to 22_ _.
_ _D_ will be changed to 09_ _.
_ _E_ will be changed to 0D_ _.

Table 3 Input conversion rules (for the second digit from the most significant digit)

_0_ _ will be changed to _ _00.
_1_ _ will be changed to _ _02.
_2_ _ will be changed to _ _03.
_3_ _ will be changed to _ _04.
_4_ _ will be changed to _ _05.
_6_ _ will be changed to _ _20.
_7_ _ will be changed to _ _21.
_8_ _ will be changed to _ _07.
_9_ _ will be changed to _ _08.
_A_ _ will be changed to _ _22.
_D_ _ will be changed to _ _09.
_E_ _ will be changed to _ _0D.

(7) Conversion rules (MR-J2S-_CP_ => MR-J4-_A_-RJ)

The following table shows the parameter conversion rules from MR-J2S-_CP_ to MR-J4-_A_-RJ.
Parameters not specified in the following table will be set to their initial values.

MR-J2S-_CP_				MR-J4-_A_-RJ			Conversion rule
No.	Name	Type	Target	No.	Type	Target	
0	Command method and regenerative option selection	Hex	_ _ X _	PT01	Hex	_ _ _ X	_ _ 2 _ will be changed to _ _ _ 0. Otherwise, the setting value will be maintained.
			XX_ _	PA02	Hex	_ _ XX	00_ _ will be changed to _ _ 00. 01_ _ will be changed to _ _ 01. 02_ _ will be changed to _ _ 02. 03_ _ will be changed to _ _ 03. 04_ _ will be changed to _ _ 04. 05_ _ will be changed to _ _ 05. 06_ _ will be changed to _ _ 06. 08_ _ will be changed to _ _ 08. 09_ _ will be changed to _ _ 09. Otherwise, _ _ 00 will be set.
1	Feeding function selection	Hex	_ _ _X	PA14	Dec	-	The hexadecimal number is converted to decimal.
			_ _ X_	PT03	Hex	_ _ _ X	The setting value will be maintained.
			_ X _ _		Hex	_ _ X _	The setting value will be maintained.
			X _ _ _	PT02	Hex	_ _ _ X	The setting value will be maintained.
2	Function selection 1	Hex	_ _ _ X	PD29	Hex	_ _ _ X	The setting value will be maintained.
			X _ _ _	PA03	Hex	_ _ _ X	The setting value will be maintained.
3	Auto tuning	Hex	_ _ _ X	PA09	Dec	-	_ _ _ 1 will be changed to 8. _ _ _ 2 will be changed to 11. _ _ _ 3 will be changed to 13. _ _ _ 4 will be changed to 14. _ _ _ 5 will be changed to 16. _ _ _ 6 will be changed to 18. _ _ _ 7 will be changed to 19. _ _ _ 8 will be changed to 21. _ _ _ 9 will be changed to 23. _ _ _ A will be changed to 25. _ _ _ B will be changed to 27. _ _ _ C will be changed to 28. _ _ _ D will be changed to 30. _ _ _ E will be changed to 32. _ _ _ F will be changed to 34. To use the HC/HA series servo motors without being replaced, refer to (5) in Section 2.3.5.
			_ X _ _	PA08	Hex	_ _ _ X	_ 4 _ _ will be changed to _ _ _ 3. Otherwise, the setting value will be maintained.
4	Electronic gear numerator	Dec	-	PA06	Dec	-	(1) When the setting value of No. 4 is _ 0 131072 will be set. (2) When the setting value of No. 4 is other than 0 the setting value will be maintained. To use the HC/HA series servo motors without being replaced, refer to (5) in Section 2.3.5.
5	Electronic gear denominator	Dec	-	PA07	Dec	-	The setting value will be maintained. To use the HC/HA series servo motors without being replaced, refer to (5) in Section 2.3.5.
6	In-position range	Dec	-	PA10	Dec	-	The setting value will be maintained.
7	Position loop gain 1	Dec	-	PB07	Dec	-	The setting value will be multiplied by 2/3 and one decimal place will be added.
8	Home position return type	Hex	_ _ _ X	PT04	Hex	_ _ _ X	The setting value will be maintained.
			_ _ X _		Hex	_ _ X _	The setting value will be maintained.
			_ X _ _	PT29	Hex	_ _ _ X	The setting value will be maintained.

Hex: hexadecimal parameter; Dec: decimal parameter

MR-J2S-_CP_				MR-J4-_A_-RJ			Conversion rule
No.	Name	Type	Target	No.	Type	Target	
9	Home position return speed	Dec	-	PT05	Dec	-	The setting value will be maintained.
10	Creep speed	Dec	-	PT06	Dec	-	The setting value will be maintained.
11	Home position shift distance	Dec	-	PT07	Dec	-	The setting value will be maintained.
12	Rough match output range	Dec	-	PT12	Dec	-	The setting value will be maintained.
13	JOG speed	Dec	-	PT13	Dec	-	The setting value will be maintained.
14	S-pattern acceleration/deceleration time constant	Dec	-	PC03	Dec	-	The setting value will be maintained.
15	Station number setting	Dec	-	PC20	Dec	-	The setting value will be maintained.
16	Serial communication function selection - Alarm history clear	Hex	_ _ _ X	PC21	Hex	_ _ X _	_ _ _ 4 will be changed to _ _ _0. Otherwise, the setting value will be maintained.
			_ _ X _	PC18	Hex	_ _ _ X	The setting value will be maintained.
			X _ _ _	PC21	Hex	_ X _ _	The setting value will be maintained.
17	Analog monitor output	Hex	_ _ _ X	PC14	Hex	_ _ _ X	_ _ _ 5 will be changed to _ _ _ E. _ _ _ 9 will be changed to _ _ _ 8. _ _ _ A will be changed to _ _ _ 9. _ _ _ B will be changed to _ _ _ D. Otherwise, the setting value will be maintained.
			_ X _ _	PC15	Hex	_ _ _ X	_ 5_ _ will be changed to _ _ _ E. _ 9_ _ will be changed to _ _ _ 8. _ A _ _ will be changed to _ _ _ 9. _ B _ _ will be changed to _ _ _ D. Otherwise, the setting value will be maintained.
18	Status display selection	Hex	_ _ XX	PC36	Hex	_ _ XX	_ _ 0 0 will be changed to _ _ 2 1. _ _ 0 1 will be changed to _ _ 2 2. _ _ 0 2 will be changed to _ _ 2 3. _ _ 0 3 will be changed to _ _ 2 4. _ _ 0 4 will be changed to _ _ 0 0. _ _ 0 5 will be changed to _ _ 0 1. _ _ 0 6 will be changed to _ _ 0 2. _ _ 0 7 will be changed to _ _ 2 7. _ _ 0 8 will be changed to _ _ 0 6. _ _ 0 9 will be changed to _ _ 0 7. _ _ 0 A will be changed to _ _ 0 8. _ _ 0 B will be changed to _ _ 0 9. _ _ 0 C will be changed to _ _ 0 A. _ _ 0 D will be changed to _ _ 0 B. _ _ 0 E will be changed to _ _ 0 C. _ _ 0 F will be changed to _ _ 0 D. _ _ 1 0 will be changed to _ _ 0 E. _ _ 1 1 will be changed to _ _ 0 F.
20	Function selection 2	Hex	_ X _ _	PB24	Hex	_ _ _ X	The setting value will be maintained.
22	Function selection 4	Hex	_ _ _ X	PD30	Hex	_ _ _ X	The setting value will be maintained.
24	Feed forward gain	Dec	-	PB04	Dec	-	The setting value will be maintained.
27	Encoder output pulses	Dec	-	PA15	Dec	-	(1) When the setting value of No. 58 is 1 32 times the setting value of No. 27 will be set. (2) When the setting value of No. 58 is other than 1 the setting value of No. 27 will be maintained. To use the HC/HA series servo motors without being replaced, refer to (5) in Section 2.3.5.
58	Function selection 9	Hex	X _ _ _				
28	Internal torque limit 1	Dec	-	PA11	Dec	-	One decimal place will be added.
			-	PA12	Dec	-	One decimal place will be added.
29	Internal torque limit 2	Dec	-	PC35	Dec	-	One decimal place will be added.

Hex: hexadecimal parameter; Dec: decimal parameter

MR-J2S-_CP_				MR-J4-_A_-RJ			Conversion rule
No.	Name	Type	Target	No.	Type	Target	
30	Backlash compensation	Dec	-	PT14	Dec	-	A value obtained by multiplying the setting value by 32 will be set. The above value will be clamped at 65535. To use the HC/HA series servo motors without being replaced, refer to (5) in Section 2.3.5.
33	Electromagnetic brake sequence output	Dec	-	PC16	Dec	-	The setting value will be maintained.
34	Load to motor inertia ratio	Dec	-	PB06	Dec	-	One decimal place will be added.
35	Position loop gain 2	Dec	-	PB08	Dec	-	One decimal place will be added.
37	Speed loop gain 2	Dec	-	PB09	Dec	-	The setting value will be maintained.
38	Speed integral compensation	Dec	-	PB10	Dec	-	One decimal place will be added.
39	Speed differential compensation	Dec	-	PB11	Dec	-	The setting value will be maintained.
42	Home position return position data	Dec	-	PT08	Dec	-	The setting value will be maintained.
43	Travel distance after proximity dog	Dec	-	PT09	Dec	-	The setting value will be maintained.
44	Stopper type home position return stopper time	Dec	-	PT10	Dec	-	The setting value will be maintained.
45	Stopper type home position return torque limit value	Dec	-	PT11	Dec	-	The setting value will be maintained.
46	Software limit +	Dec	-	PT16	Dec	-	The setting value will be maintained.
47	Software limit +	Dec	-	PT15	Dec	-	The setting value will be maintained.
48	Software limit -	Dec	-	PT18	Dec	-	The setting value will be maintained.
49	Software limit -	Dec	-	PT17	Dec	-	The setting value will be maintained.
50	Position range output address +	Dec	-	PT20	Dec	-	The setting value will be maintained.
51	Position range output address +	Dec	-	PT19	Dec	-	The setting value will be maintained.
52	Position range output address -	Dec	-	PT22	Dec	-	The setting value will be maintained.
53	Position range output address -	Dec	-	PT21	Dec	-	The setting value will be maintained.
55	Function selection 6	Hex	_ X _ _	PD30	Hex	_ _ X _	The setting value will be maintained.
58	Function selection 9	Hex	_ X _ _	PC19	Hex	_ _ _ X	The setting value will be maintained.
			X _ _ _	PC19	Hex	_ _ X _	The setting value will be maintained.
59	Function selection A	Hex	_ X _ _	PD33	Hex	_ X _ _	The setting value will be maintained.
			X _ _ _	-	-	-	The setting value will not be maintained. (Alarm code output setting)

MR-J2S-_CP_				MR-J4-_A_-RJ			Conversion rule
No.	Name	Type	Target	No.	Type	Target	
61	Machine resonance suppression filter 1	Hex	_ _ XX	PB01	Hex	_ _ _ X	_ _ 0 0 will be changed to _ _ _ 0. Otherwise, _ _ _ 2 will be set.
			_ _ XX	PB13	Dec	-	_ _ 0 0 will be changed to 4500. _ _ 0 1 will be changed to 4500. _ _ 0 2 will be changed to 2250. _ _ 0 3 will be changed to 1500. _ _ 0 4 will be changed to 1125. _ _ 0 5 will be changed to 900. _ _ 0 6 will be changed to 750. _ _ 0 7 will be changed to 643. _ _ 0 8 will be changed to 563. _ _ 0 9 will be changed to 500. _ _ 0 A will be changed to 450. _ _ 0 B will be changed to 409. _ _ 0 C will be changed to 375. _ _ 0 D will be changed to 346. _ _ 0 E will be changed to 321. _ _ 0 F will be changed to 300. _ _ 1 0 will be changed to 281. _ _ 1 1 will be changed to 265. _ _ 1 2 will be changed to 250. _ _ 1 3 will be changed to 237. _ _ 1 4 will be changed to 225. _ _ 1 5 will be changed to 214. _ _ 1 6 will be changed to 205. _ _ 1 7 will be changed to 196. _ _ 1 8 will be changed to 188. _ _ 1 9 will be changed to 180. _ _ 1 A will be changed to 173. _ _ 1 B will be changed to 167. _ _ 1 C will be changed to 160. _ _ 1 D will be changed to 155. _ _ 1 E will be changed to 150. _ _ 1 F will be changed to 145.
			_ X _ _	PB14	Hex	_ _ X _	The setting value will be maintained.

Hex: hexadecimal parameter; Dec: decimal parameter

MR-J2S-_CP_				MR-J4-_A_-RJ			Conversion rule
No.	Name	Type	Target	No.	Type	Target	
62	Machine resonance suppression filter 2	Hex	_ _ XX	PB15	Dec	-	_ _ 0 0 will be changed to 4500. _ _ 0 1 will be changed to 4500. _ _ 0 2 will be changed to 2250. _ _ 0 3 will be changed to 1500. _ _ 0 4 will be changed to 1125. _ _ 0 5 will be changed to 900. _ _ 0 6 will be changed to 750. _ _ 0 7 will be changed to 643. _ _ 0 8 will be changed to 563. _ _ 0 9 will be changed to 500. _ _ 0 A will be changed to 450. _ _ 0 B will be changed to 409. _ _ 0 C will be changed to 375. _ _ 0 D will be changed to 346. _ _ 0 E will be changed to 321. _ _ 0 F will be changed to 300. _ _ 1 0 will be changed to 281. _ _ 1 1 will be changed to 265. _ _ 1 2 will be changed to 250. _ _ 1 3 will be changed to 237. _ _ 1 4 will be changed to 225. _ _ 1 5 will be changed to 214. _ _ 1 6 will be changed to 205. _ _ 1 7 will be changed to 196. _ _ 1 8 will be changed to 188. _ _ 1 9 will be changed to 180. _ _ 1 A will be changed to 173. _ _ 1 B will be changed to 167. _ _ 1 C will be changed to 160. _ _ 1 D will be changed to 155. _ _ 1 E will be changed to 150. _ _ 1 F will be changed to 145.
			_ _ XX	PB16	Hex	_ _ _ X	_ _ 0 0 will be changed to _ _ _ 0. Otherwise, _ _ _ 1 will be set.
			_ X _ _		Hex	_ _ X _	The setting value will be maintained.
63	Low-pass filter/adaptive vibration suppression control	Hex	_ _ X _	PB18	Dec	-	_ _ 1 _ will be changed to 18000.
			_ _ X _	PB23	Hex	_ _ X _	The setting value will be maintained.
64	Load to motor inertia ratio 2	Dec	-	PB29	Dec	-	One decimal place will be added.
35	Position loop gain 2	Dec	-	PB30	Dec	-	One decimal place will be added to (No. 35) × (No. 65) ÷ 100.
65	Position loop gain 2 change ratio	Dec	-				
37	Speed loop gain 2	Dec	-	PB31	Dec	-	The value will be (No. 37) × (No. 66) ÷ 100.
66	Speed loop gain 2 change ratio	Dec	-				
38	Speed integral compensation	Dec	-	PB32	Dec	-	One decimal place will be added to (No. 38) × (No. 67) ÷ 100. The above value will be clamped at 5000.0.
67	Speed integral compensation change ratio	Dec	-				
68	Gain switching selection	Hex	_ _ _ X	PB26	Hex	_ _ _ X	The setting value will be maintained.
69	Gain switching condition	Dec	-	PB27	Dec	-	The setting value will be maintained.
70	Gain switching time constant	Dec	-	PB28	Dec	-	The setting value will be maintained.

Hex: hexadecimal parameter; Dec: decimal parameter

MR-J2S-_CP_				MR-J4-_A_-RJ			Conversion rule
No.	Name	Type	Target	No.	Type	Target	
79	For manufacturer setting	Hex	_ _ XX	PD22	Hex	XX _ _	The setting value will be converted as shown in Table 1 (as input). However, a setting value other than those in Table 1 will be converted to 2B _ _. When conversion of I/O signal assignment is enabled, this parameter will be converted according to the control signal connection of the renewal tool. When conversion of I/O signal assignment is not enabled, the initial value will be used. This parameter can be used with MR Configurator2 of software version 1.53F or later.
80	For manufacturer setting	Hex	_ _ XX	PD12	Hex	XX _ _	However, a setting value other than those in Table 1 will be converted to 38 _ _. When conversion of I/O signal assignment is enabled, this parameter will be converted according to the control signal connection of the renewal tool. When conversion of I/O signal assignment is not enabled, the initial value will be used. This parameter can be used with MR Configurator2 of software version 1.53F or later.
			XX _ _	PD06	Hex	XX _ _	The setting value will be converted as shown in Table 1 (as input). However, a setting value other than those in Table 1 will be converted to 20 _ _. When conversion of I/O signal assignment is enabled, this parameter will be converted according to the control signal connection of the renewal tool. When conversion of I/O signal assignment is not enabled, the initial value will be used. This parameter can be used with MR Configurator2 of software version 1.53F or later.
81	For manufacturer setting	Hex	_ _ XX	PD08	Hex	XX _ _	The setting value will be converted as shown in Table 1 (as input). However, a setting value other than those in Table 1 will be converted to 07 _ _. When conversion of I/O signal assignment is enabled, this parameter will be converted according to the control signal connection of the renewal tool. When conversion of I/O signal assignment is not enabled, the initial value will be used. This parameter can be used with MR Configurator2 of software version 1.53F or later.
			XX _ _	PD10	Hex	XX _ _	The setting value will be converted as shown in Table 1 (as input). However, a setting value other than those in Table 1 will be converted to 08 _ _. When conversion of I/O signal assignment is enabled, this parameter will be converted according to the control signal connection of the renewal tool. When conversion of I/O signal assignment is not enabled, the initial value will be used. This parameter can be used with MR Configurator2 of software version 1.53F or later.

Hex: hexadecimal parameter; Dec: decimal parameter

MR-J2S-_CP_				MR-J4-_A_-RJ			Conversion rule
No.	Name	Type	Target	No.	Type	Target	
82	For manufacturer setting	Hex	_ _ XX	PD14	Hex	XX _ _	The setting value will be converted as shown in Table 1 (as input). However, a setting value other than those in Table 1 will be converted to 39 _ _. When conversion of I/O signal assignment is enabled, this parameter will be converted according to the control signal connection of the renewal tool. When conversion of I/O signal assignment is not enabled, the initial value will be used. This parameter can be used with MR Configurator2 of software version 1.53F or later.
			XX _ _	PD04	Hex	XX _ _	The setting value will be converted as shown in Table 1 (as input). However, a setting value other than those in Table 1 will be converted to 02 _ _. When conversion of I/O signal assignment is enabled, this parameter will be converted according to the control signal connection of the renewal tool. When conversion of I/O signal assignment is not enabled, the initial value will be used. This parameter can be used with MR Configurator2 of software version 1.53F or later.
83	For manufacturer setting	Hex	_ _ XX	PD18	Hex	XX _ _	The setting value will be converted as shown in Table 1 (as input). However, a setting value other than those in Table 1 will be converted to 0A _ _. When conversion of I/O signal assignment is enabled, this parameter will be converted according to the control signal connection of the renewal tool. When conversion of I/O signal assignment is not enabled, the initial value will be used. This parameter can be used with MR Configurator2 of software version 1.53F or later.
			XX _ _	PD20	Hex	XX _ _	The setting value will be converted as shown in Table 1 (as input). However, a setting value other than those in Table 1 will be converted to 0B _ _. When conversion of I/O signal assignment is enabled, this parameter will be converted according to the control signal connection of the renewal tool. When conversion of I/O signal assignment is not enabled, the initial value will be used. This parameter can be used with MR Configurator2 of software version 1.53F or later.

Hex: hexadecimal parameter; Dec: decimal parameter

MR-J2S-_CP_				MR-J4-_A_-RJ			Conversion rule
No.	Name	Type	Target	No.	Type	Target	
84	For manufacturer setting	Hex	_ _ _ X	PD01	Hex	X _ _ _	The setting value will be converted to the manufacturer setting value. Do not change the setting value.
			_ _ _ X			_ _ _ X	The setting value will be converted to the manufacturer setting value. Do not change the setting value.
			_ _ X _			_ X _ _	The setting value will be converted to the manufacturer setting value. Do not change the setting value.
			_ _ X _			_ X _ _	The setting value will be converted to the manufacturer setting value. Do not change the setting value.
			_ X _ _	PD41	Hex	_ _ _ X	The setting value will be converted to the manufacturer setting value. Do not change the setting value.
			_ X _ _	PD42	Hex	_ X _ _	The setting value will be converted to the manufacturer setting value. Do not change the setting value.
			_ X _ _			_ X _ _	The setting value will be converted to the manufacturer setting value. Do not change the setting value.
			X _ _ _			_ X _ _	The setting value will be converted to the manufacturer setting value. Do not change the setting value.
			X _ _ _			_ X _ _	The setting value will be converted to the manufacturer setting value. Do not change the setting value.
			X _ _ _	PD41	Hex	_ _ X _	The setting value will be converted to the manufacturer setting value. Do not change the setting value.
			X _ _ _	PD01	Hex	_ _ X _	The setting value will be converted to the manufacturer setting value. Do not change the setting value.
85	For manufacturer setting	Hex	_ _ _ X			_ _ X _	The setting value will be converted to the manufacturer setting value. Do not change the setting value.
86	For manufacturer setting	Hex	_ _ XX	PD24	Hex	_ _ XX	The setting value will be converted as shown in Table 2 (as output). However, a setting value other than those in Table 2 will be converted to _ _0C. When conversion of I/O signal assignment is enabled, this parameter will be converted according to the control signal connection of the renewal tool. When conversion of I/O signal assignment is not enabled, the initial value will be used. This parameter can be used with MR Configurator2 of software version 1.53F or later.

Hex: hexadecimal parameter; Dec: decimal parameter

MR-J2S-_CP_				MR-J4-_A_-RJ			Conversion rule
No.	Name	Type	Target	No.	Type	Target	
87	For manufacturer setting	Hex	_ _ XX	PD23	Hex	_ _ XX	The setting value will be converted as shown in Table 2 (as output). However, a setting value other than those in Table 2 will be converted to _ _04. When conversion of I/O signal assignment is enabled, this parameter will be converted according to the control signal connection of the renewal tool. When conversion of I/O signal assignment is not enabled, the initial value will be used. This parameter can be used with MR Configurator2 of software version 1.53F or later.
			XX _ _	PD26	Hex	_ _ XX	The setting value will be converted as shown in Table 2 (as output). However, a setting value other than those in Table 2 will be converted to _ _07. When conversion of I/O signal assignment is enabled, this parameter will be converted according to the control signal connection of the renewal tool. When conversion of I/O signal assignment is not enabled, the initial value will be used. This parameter can be used with MR Configurator2 of software version 1.53F or later.
88	For manufacturer setting	Hex	_ _ XX	PD27	Hex	_ _ XX	The setting value will be converted as shown in Table 2 (as output). However, a setting value other than those in Table 2 will be converted to _ _03. When conversion of I/O signal assignment is enabled, this parameter will be converted according to the control signal connection of the renewal tool. When conversion of I/O signal assignment is not enabled, the initial value will be used. This parameter can be used with MR Configurator2 of software version 1.53F or later.
			XX _ _	PD28	Hex	_ _ XX	The setting value will be converted as shown in Table 2 (as output). However, a setting value other than those in Table 2 will be converted to _ _02. When conversion of I/O signal assignment is enabled, this parameter will be converted according to the control signal connection of the renewal tool. When conversion of I/O signal assignment is not enabled, the initial value will be used. This parameter can be used with MR Configurator2 of software version 1.53F or later.
-	-	-	-	PA21	Hex	X _ _ _	3 _ _ _ will be set. To use the HC/HA series servo motors without being replaced, refer to (5) in Section 2.3.5.
-	-	-	-	PA01	Hex	_ _ _ X	_ _ _ 6 will be set. (Point table method)
					Hex	_ _ X _	_ _ 0 _ will be set. (Standard control mode)
					Hex	_ X _ _	_ 0 _ _ will be set.
					Hex	X _ _ _	1 _ _ _ will be set.

Hex: hexadecimal parameter; Dec: decimal parameter

Table 1 Input conversion rules (MR-J2S-_CP_ → MR-J4-_A_-RJ)

_ _ X X → X X _ _ or X X _ _ → X X _ _

00 will not be changed.
01 will be changed to 0C.
02 will not be changed.
03 will not be changed.
04 will be changed to 0A.
05 will be changed to 0B.
06 will be changed to 07.
07 will be changed to 08.
08 will be changed to 20.
09 will be changed to 2B.
0A will be changed to 38.
0B will be changed to 39.
0C will be changed to 3A.
0D will be changed to 3B.
0E will be changed to 26.
0F will be changed to 05.
10 will be changed to 09.
11 will be changed to 04.
12 will be changed to 27.
13 will be changed to 24.
14 will be changed to 25.
15 will be changed to 3C.
17 will be changed to 0D.
18 will be changed to 23.

Table 2 Output conversion rules (MR-J2S-_CP_ → MR-J4-_A_-RJ)

_ _ X X → _ _ X X or X X _ _ → _ _ X X

00 will not be changed.
01 will be changed to 02.
02 will be changed to 03.
03 will be changed to 04.
04 will be changed to 23.
05 will be changed to 24.
06 will be changed to 05.
07 will be changed to 06.
08 will be changed to 25.
09 will be changed to 08.
0A will be changed to 09.
0B will be changed to 07.
0C will be changed to 26.
0D will be changed to 27.
0E will be changed to 38.
0F will be changed to 39.
10 will be changed to 3A.
11 will be changed to 3B.
12 will be changed to 3C.

(8) Conversion rules (MR-J2S-_CL_ => MR-J4-_A_-RJ)

The following table shows the parameter conversion rules from MR-J2S-_CL_ to MR-J4-_A_-RJ.
Parameters not specified in the following table will be set to their initial values.

MR-J2S-_CL_				MR-J4-_A_-RJ			Conversion rule
No.	Name	Type	Target	No.	Type	Target	
0	Command method and regenerative option selection	Hex	_ _ _ X	PT02	Hex	X _ _ _	The setting value will be maintained.
			_ _ X _	PT01	Hex	_ _ _ X	_ _ 2 will be changed to _ _ _ 0. Otherwise, the setting value will be maintained.
			XX_ _	PA02	Hex	_ _ XX	00_ _ will be changed to _ _ 00. 01_ _ will be changed to _ _ 01. 02_ _ will be changed to _ _ 02. 03_ _ will be changed to _ _ 03. 04_ _ will be changed to _ _ 04. 05_ _ will be changed to _ _ 05. 06_ _ will be changed to _ _ 06. 08_ _ will be changed to _ _ 08. 09_ _ will be changed to _ _ 09. Otherwise, _ _ 00 will be set.
1	Feeding function selection	Hex	_ _ _X	PA14	Dec	-	The hexadecimal number is converted to decimal.
			_ _ X_	PT03	Hex	_ _ _ X	The setting value will be maintained.
			_ X _ _		Hex	_ _ X _	The setting value will be maintained.
			X _ _ _	PT02	Hex	_ _ _ X	The setting value will be maintained.
2	Function selection 1	Hex	_ _ _ X	PD29	Hex	_ _ _ X	The setting value will be maintained.
			X _ _ _	PA03	Hex	_ _ _ X	The setting value will be maintained.
3	Auto tuning	Hex	_ _ _ X	PA09	Dec	-	_ _ _ 1 will be changed to 8. _ _ _ 2 will be changed to 11. _ _ _ 3 will be changed to 13. _ _ _ 4 will be changed to 14. _ _ _ 5 will be changed to 16. _ _ _ 6 will be changed to 18. _ _ _ 7 will be changed to 19. _ _ _ 8 will be changed to 21. _ _ _ 9 will be changed to 23. _ _ _ A will be changed to 25. _ _ _ B will be changed to 27. _ _ _ C will be changed to 28. _ _ _ D will be changed to 30. _ _ _ E will be changed to 32. _ _ _ F will be changed to 34. To use the HC/HA series servo motors without being replaced, refer to (5) in Section 2.3.5.
			_ X _ _	PA08	Hex	_ _ _ X	_ 4_ _ will be changed to _ _ _ 3. Otherwise, the setting value will be maintained.
4	Electronic gear numerator	Dec	-	PA06	Dec	-	(1) When the setting value of No. 4 is _ 0 131072 will be set. (2) When the setting value of No. 4 is other than 0 the setting value will be maintained. To use the HC/HA series servo motors without being replaced, refer to (5) in Section 2.3.5.
5	Electronic gear denominator	Dec	-	PA07	Dec	-	The setting value will be maintained. To use the HC/HA series servo motors without being replaced, refer to (5) in Section 2.3.5.
6	Position end output	Dec	-	PA10	Dec	-	The setting value will be maintained.
7	Position loop gain 1	Dec	-	PB07	Dec	-	The setting value will be multiplied by 2/3 and one decimal place will be added.

Hex: hexadecimal parameter; Dec: decimal parameter

MR-J2S-_CL_				MR-J4-_A_-RJ			Conversion rule
No.	Name	Type	Target	No.	Type	Target	
8	Home position return type	Hex	_ _ _ X	PT04	Hex	_ _ _ X	The setting value will be maintained.
			_ _ X _		Hex	_ _ X _	The setting value will be maintained.
			_ X _ _	PT29	Hex	_ _ _ X	The setting value will be maintained.
9	Home position return speed	Dec	-	PT05	Dec	-	The setting value will be maintained.
10	Creep speed	Dec	-	PT06	Dec	-	The setting value will be maintained.
11	Home position shift distance	Dec	-	PT07	Dec	-	The setting value will be maintained.
12	For manufacturer setting	Dec	-	PT12	Dec	-	The setting value will be maintained.
13	JOG speed	Dec	-	PT13	Dec	-	The setting value will be maintained.
14	S-pattern acceleration/deceleration time constant	Dec	-	PC03	Dec	-	The setting value will be maintained.
15	Station number setting	Dec	-	PC20	Dec	-	The setting value will be maintained.
16	Serial communication function selection - Alarm history clear	Hex	_ _ _ X	PC21	Hex	_ _ X _	_ _ _ 4 will be changed to _ _ 0_. Otherwise, the setting value will be maintained.
			_ _ X _	PC18	Hex	_ _ _ X	The setting value will be maintained.
			X _ _ _	PC21	Hex	_ X _ _	The setting value will be maintained.
17	Analog monitor output	Hex	_ _ _ X	PC14	Hex	_ _ _ X	_ _ _ 5 will be changed to _ _ _ E. _ _ _ 9 will be changed to _ _ _ 8. _ _ _ A will be changed to _ _ _ 9. _ _ _ B will be changed to _ _ _ D. Otherwise, the setting value will be maintained.
			_ X _ _	PC15	Hex	_ _ _ X	_ 5_ _ will be changed to _ _ _ E. _ 9_ _ will be changed to _ _ _ 8. _ A _ _ will be changed to _ _ _ 9. _ B _ _ will be changed to _ _ _ D. Otherwise, the setting value will be maintained.
18	Status display selection	Hex	_ _ XX	PC36	Hex	_ _ XX	_ _ 0 0 will be changed to _ _ 2 1. _ _ 0 1 will be changed to _ _ 2 2. _ _ 0 2 will be changed to _ _ 2 3. _ _ 0 3 will be changed to _ _ 2 4. _ _ 0 4 will be changed to _ _ 2 5. _ _ 0 5 will be changed to _ _ 0 0. _ _ 0 6 will be changed to _ _ 0 1. _ _ 0 7 will be changed to _ _ 0 2. _ _ 0 8 will be changed to _ _ 2 7. _ _ 0 9 will be changed to _ _ 0 6. _ _ 0 A will be changed to _ _ 0 7. _ _ 0 B will be changed to _ _ 0 8. _ _ 0 C will be changed to _ _ 0 9. _ _ 0 D will be changed to _ _ 0 A. _ _ 0 E will be changed to _ _ 0 B. _ _ 0 F will be changed to _ _ 0 C. _ _ 1 0 will be changed to _ _ 0 D. _ _ 1 1 will be changed to _ _ 0 E. _ _ 1 2 will be changed to _ _ 0 F.
20	Function selection 2	Hex	_ X _ _	PB24	Hex	_ _ _ X	The setting value will be maintained.
22	Function selection 4	Hex	_ _ _ X	PD30	Hex	_ _ _ X	The setting value will be maintained.
24	Feed forward gain	Dec	-	PB04	Dec	-	The setting value will be maintained.

Hex: hexadecimal parameter; Dec: decimal parameter

MR-J2S-_CL_				MR-J4-_A_-RJ			Conversion rule
No.	Name	Type	Target	No.	Type	Target	
27	Encoder output pulses	Dec	-	PA15	Dec	-	(1) When the setting value of No. 58 is 1 32 times the setting value of No. 27 will be set. (2) When the setting value of No. 58 is other than 1 the setting value of No. 27 will be maintained. To use the HC/HA series servo motors without being replaced, refer to (5) in Section 2.3.5.
58	Function selection 9	Hex	X _ _ _				
28	Internal torque limit 1	Dec	-	PA11	Dec	-	One decimal place will be added.
			-	PA12	Dec	-	One decimal place will be added.
29	Internal torque limit 2	Dec	-	PC35	Dec	-	One decimal place will be added.
30	Backlash compensation	Dec	-	PT14	Dec	-	A value obtained by multiplying the setting value by 32 will be set. The above value will be clamped at 65535. To use the HC/HA series servo motors without being replaced, refer to (5) in Section 2.3.5.
33	Electromagnetic brake sequence output	Dec	-	PC16	Dec	-	The setting value will be maintained.
34	Load to motor inertia ratio	Dec	-	PB06	Dec	-	One decimal place will be added.
35	Position loop gain 2	Dec	-	PB08	Dec	-	One decimal place will be added.
37	Speed loop gain 2	Dec	-	PB09	Dec	-	The setting value will be maintained.
38	Speed integral compensation	Dec	-	PB10	Dec	-	One decimal place will be added.
39	Speed differential compensation	Dec	-	PB11	Dec	-	The setting value will be maintained.
40	JOG operation acceleration/deceleration time constant	Dec	-	PC01	Dec	-	The setting value will be maintained.
				PC02	Dec	-	The setting value will be maintained.
41	Home position return acceleration/deceleration time constant	Dec	-	PC30	Dec	-	The setting value will be maintained.
				PC31	Dec	-	The setting value will be maintained.
42	Home position return position data	Dec	-	PT08	Dec	-	The setting value will be maintained.
43	Travel distance after proximity dog	Dec	-	PT09	Dec	-	The setting value will be maintained.
44	Stopper type home position return stopper time	Dec	-	PT10	Dec	-	The setting value will be maintained.
45	Stopper type home position return torque limit value	Dec	-	PT11	Dec	-	One decimal place will be added.
46	Software limit +	Dec	-	PT16	Dec	-	The setting value will be maintained.
47	Software limit +	Dec	-	PT15	Dec	-	The setting value will be maintained.
48	Software limit -	Dec	-	PT18	Dec	-	The setting value will be maintained.
49	Software limit -	Dec	-	PT17	Dec	-	The setting value will be maintained.
50	Position range output address +	Dec	-	PT20	Dec	-	The setting value will be maintained.
51	Position range output address +	Dec	-	PT19	Dec	-	The setting value will be maintained.
52	Position range output address -	Dec	-	PT22	Dec	-	The setting value will be maintained.
53	Position range output address -	Dec	-	PT21	Dec	-	The setting value will be maintained.
55	Function selection 6	Hex	_ X _ _	PD30	Hex	_ _ X _	The setting value will be maintained.
58	Function selection 9	Hex	_ X _ _	PC19	Hex	_ _ _ X	The setting value will be maintained.
			X _ _ _	PC19	Hex	_ _ X _	The setting value will be maintained.
59	Function selection A	Hex	_ X _ _	PD33	Hex	_ X _ _	The setting value will be maintained.
			X _ _ _	-	-	-	The setting value will not be maintained. (Alarm code output setting)

Hex: hexadecimal parameter; Dec: decimal parameter

MR-J2S-_CL_				MR-J4-_A_-RJ			Conversion rule
No.	Name	Type	Target	No.	Type	Target	
61	Machine resonance suppression filter 1	Hex	_ _ XX	PB01	Hex	_ _ _ X	_ _ 0 0 will be changed to _ _ _ 0. Otherwise, _ _ _ 2 will be set.
			_ _ XX	PB13	Dec	-	_ _ 0 0 will be changed to 4500. _ _ 0 1 will be changed to 4500. _ _ 0 2 will be changed to 2250. _ _ 0 3 will be changed to 1500. _ _ 0 4 will be changed to 1125. _ _ 0 5 will be changed to 900. _ _ 0 6 will be changed to 750. _ _ 0 7 will be changed to 643. _ _ 0 8 will be changed to 563. _ _ 0 9 will be changed to 500. _ _ 0 A will be changed to 450. _ _ 0 B will be changed to 409. _ _ 0 C will be changed to 375. _ _ 0 D will be changed to 346. _ _ 0 E will be changed to 321. _ _ 0 F will be changed to 300. _ _ 1 0 will be changed to 281. _ _ 1 1 will be changed to 265. _ _ 1 2 will be changed to 250. _ _ 1 3 will be changed to 237. _ _ 1 4 will be changed to 225. _ _ 1 5 will be changed to 214. _ _ 1 6 will be changed to 205. _ _ 1 7 will be changed to 196. _ _ 1 8 will be changed to 188. _ _ 1 9 will be changed to 180. _ _ 1 A will be changed to 173. _ _ 1 B will be changed to 167. _ _ 1 C will be changed to 160. _ _ 1 D will be changed to 155. _ _ 1 E will be changed to 150. _ _ 1 F will be changed to 145.
			_ X _ _	PB14	Hex	_ _ X _	The setting value will be maintained.

Hex: hexadecimal parameter; Dec: decimal parameter

MR-J2S-_CL_				MR-J4-_A_-RJ			Conversion rule
No.	Name	Type	Target	No.	Type	Target	
62	Machine resonance suppression filter 2	Hex	_ _ XX	PB15	Dec	-	_ _ 0 0 will be changed to 4500. _ _ 0 1 will be changed to 4500. _ _ 0 2 will be changed to 2250. _ _ 0 3 will be changed to 1500. _ _ 0 4 will be changed to 1125. _ _ 0 5 will be changed to 900. _ _ 0 6 will be changed to 750. _ _ 0 7 will be changed to 643. _ _ 0 8 will be changed to 563. _ _ 0 9 will be changed to 500. _ _ 0 A will be changed to 450. _ _ 0 B will be changed to 409. _ _ 0 C will be changed to 375. _ _ 0 D will be changed to 346. _ _ 0 E will be changed to 321. _ _ 0 F will be changed to 300. _ _ 1 0 will be changed to 281. _ _ 1 1 will be changed to 265. _ _ 1 2 will be changed to 250. _ _ 1 3 will be changed to 237. _ _ 1 4 will be changed to 225. _ _ 1 5 will be changed to 214. _ _ 1 6 will be changed to 205. _ _ 1 7 will be changed to 196. _ _ 1 8 will be changed to 188. _ _ 1 9 will be changed to 180. _ _ 1 A will be changed to 173. _ _ 1 B will be changed to 167. _ _ 1 C will be changed to 160. _ _ 1 D will be changed to 155. _ _ 1 E will be changed to 150. _ _ 1 F will be changed to 145.
			_ _ XX	PB16	Hex	_ _ _ X	_ _ 0 0 will be changed to _ _ _ 0. Otherwise, _ _ _ 1 will be set.
			_ X _ _		Hex	_ _ X _	The setting value will be maintained.
63	Low-pass filter/adaptive vibration suppression control	Hex	_ _ X _	PB18	Dec	-	_ _ 1 _ will be changed to 18000.
			_ _ X _	PB23	Hex	_ _ X _	The setting value will be maintained.
64	Load to motor inertia ratio 2	Dec	-	PB29	Dec	-	One decimal place will be added.
35	Position loop gain 2	Dec	-	PB30	Dec	-	One decimal place will be added to (No. 35) × (No. 65) ÷ 100.
65	Position loop gain 2 change ratio	Dec	-				
37	Speed loop gain 2	Dec	-	PB31	Dec	-	The value will be (No. 37) × (No. 66) ÷ 100.
66	Speed loop gain 2 change ratio	Dec	-				
38	Speed integral compensation	Dec	-	PB32	Dec	-	One decimal place will be added to (No. 38) × (No. 67) ÷ 100. The above value will be clamped at 5000.0.
67	Speed integral compensation change ratio	Dec	-				
68	Gain switching selection	Hex	_ _ _ X	PB26	Hex	_ _ _ X	The setting value will be maintained.
69	Gain switching condition	Dec	-	PB27	Dec	-	The setting value will be maintained.
70	Gain switching time constant	Dec	-	PB28	Dec	-	The setting value will be maintained.
74	OUT1 output time setting	Dec	-	PT23	Dec	-	A value obtained by multiplying the setting value by 10 will be set.
75	OUT2 output time setting	Dec	-	PT24	Dec	-	A value obtained by multiplying the setting value by 10 will be set.
76	OUT3 output time setting	Dec	-	PT25	Dec	-	A value obtained by multiplying the setting value by 10 will be set.

Hex: hexadecimal parameter; Dec: decimal parameter

MR-J2S-_CL_				MR-J4-_A_-RJ			Conversion rule
No.	Name	Type	Target	No.	Type	Target	
77	Program input polarity selection 1	Hex	_ X _ _	PT29	Hex	_ _ X _	The setting value will be maintained.
84	For manufacturer setting	Hex	_ _ _ X	PD01	Hex	X _ _ _	The setting value will be converted to the manufacturer setting value. Do not change the setting value.
			_ _ _ X			_ _ _ X	The setting value will be converted to the manufacturer setting value. Do not change the setting value.
			_ _ X _			_ X _ _	The setting value will be converted to the manufacturer setting value. Do not change the setting value.
			_ _ X _			_ X _ _	The setting value will be converted to the manufacturer setting value. Do not change the setting value.
			_ X _ _	PD41	Hex	_ _ _ X	The setting value will be converted to the manufacturer setting value. Do not change the setting value.
			_ X _ _	PD42	Hex	_ X _ _	The setting value will be converted to the manufacturer setting value. Do not change the setting value.
			_ X _ _			_ X _ _	The setting value will be converted to the manufacturer setting value. Do not change the setting value.
			X _ _ _			_ X _ _	The setting value will be converted to the manufacturer setting value. Do not change the setting value.
			X _ _ _	PD41	Hex	_ X _ _	The setting value will be converted to the manufacturer setting value. Do not change the setting value.
			X _ _ _			_ _ X _	The setting value will be converted to the manufacturer setting value. Do not change the setting value.
			X _ _ _	PD01	Hex	_ _ X _	The setting value will be converted to the manufacturer setting value. Do not change the setting value.
85	For manufacturer setting	Hex	_ _ _ X			_ _ X _	The setting value will be converted to the manufacturer setting value. Do not change the setting value.
-	-	-	-	PA21	Hex	X _ _ _	3 _ _ _ will be set. To use the HC/HA series servo motors without being replaced, refer to (5) in Section 2.3.5.
-		-	-	PA01	Hex	_ _ _ X	_ _ _ 7 will be set. (Program method)
					Hex	_ _ X _	_ _ 0 _ will be set. (Standard control mode)
					Hex	_ X _ _	_ 0 _ _ will be set.
					Hex	X _ _ _	1 _ _ _ will be set.

Hex: hexadecimal parameter; Dec: decimal parameter

2.4 MR-J2S-_B_ Parameter Diversion Procedure

The parameter converter functions of GX Works2 and MT Developer2 convert the servo parameters of MR-J2S-_B_ to those of MR-J4-_B_ when the controller is changed.
(GX Works2: 1.84N or later, MT Developer2: 1.41T or later)

(Target model)
- Positioning module QD75M to Simple Motion module QD77MS/LD77MS
- Motion controller A series/Q17nCPUN to Q17nDSCPU/Q170MSCPU(-S1)

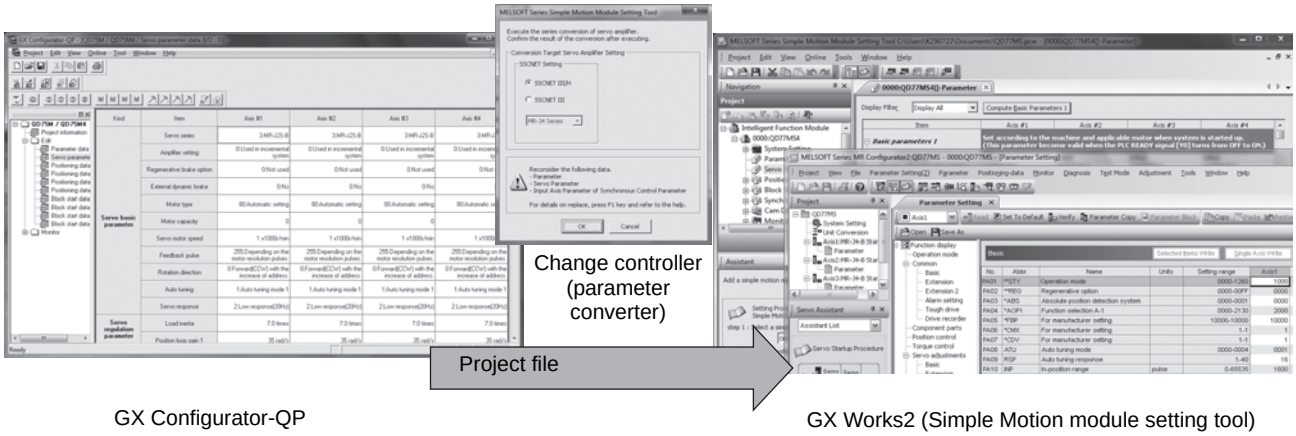

GX Configurator-QP
SW3RNC-GSVE
SW6RNC-GSVE

Change MR-J2S-_B_ to MR-J4-_B_

GX Works2 (Simple Motion module setting tool)
MT Developer2

2.4.1 Changing QD75M to QD77MS/LD77MS

(1) Start GX Works2 and create a project.

(2) Right-click [Intelligent Function Module] in the Navigation window and select [New Module] to add the simple motion module QD77MS/LD77MS.

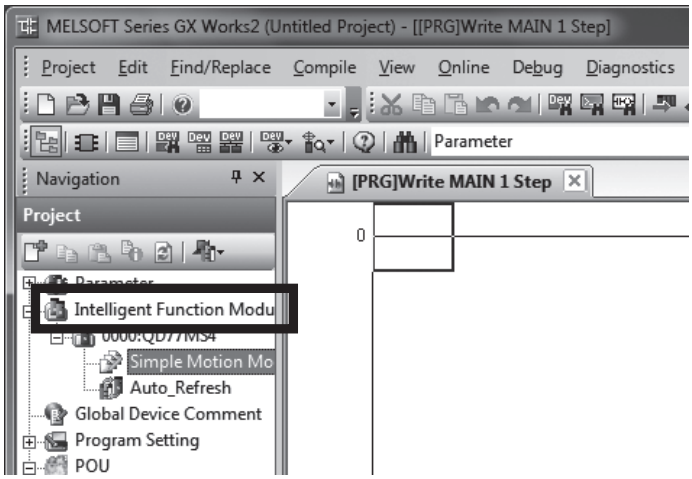

(3) Double-click [Simple Motion Module Setting] of the added simple motion module to start the simple motion module setting tool.

(4) Read the GX Configurator-QP data.
Click [Project] - [Import GX Configurator-QP Data] from the menu. A dialog box for reading the GX Configurator-QP data is displayed. Specify and read the QD75MH data.

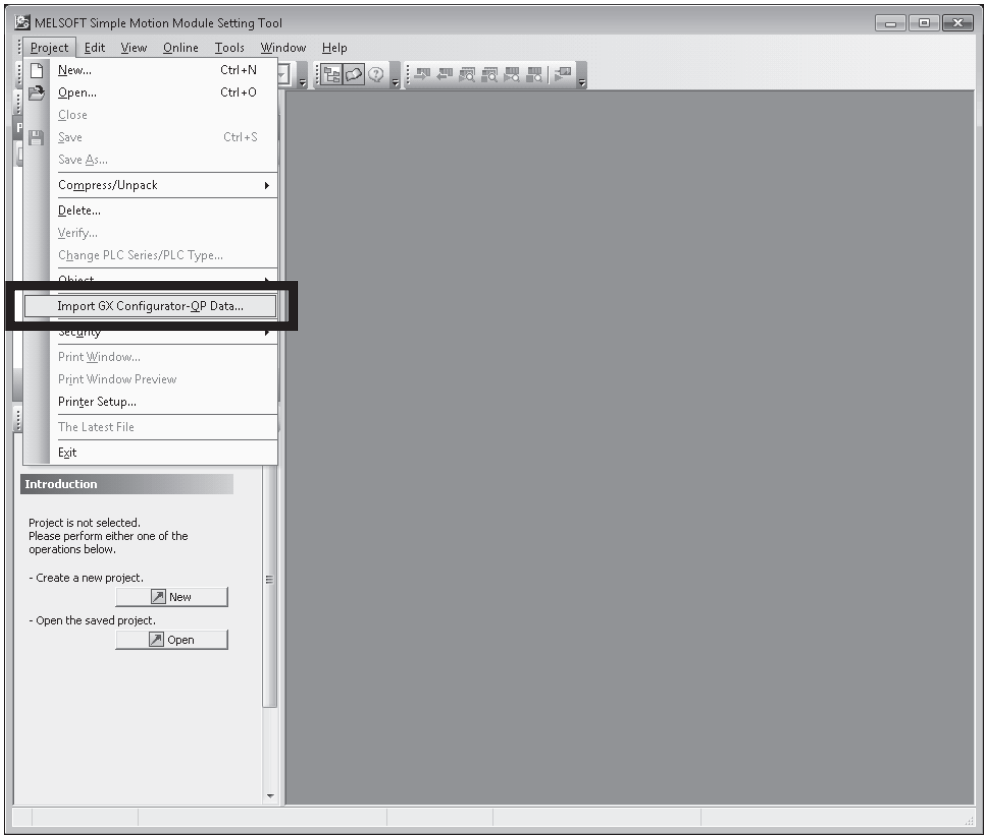

When using QD75 data made on GX Works2, save the QD75 data as GX Configurator-QP data on GX Works2 and perform the above operation.

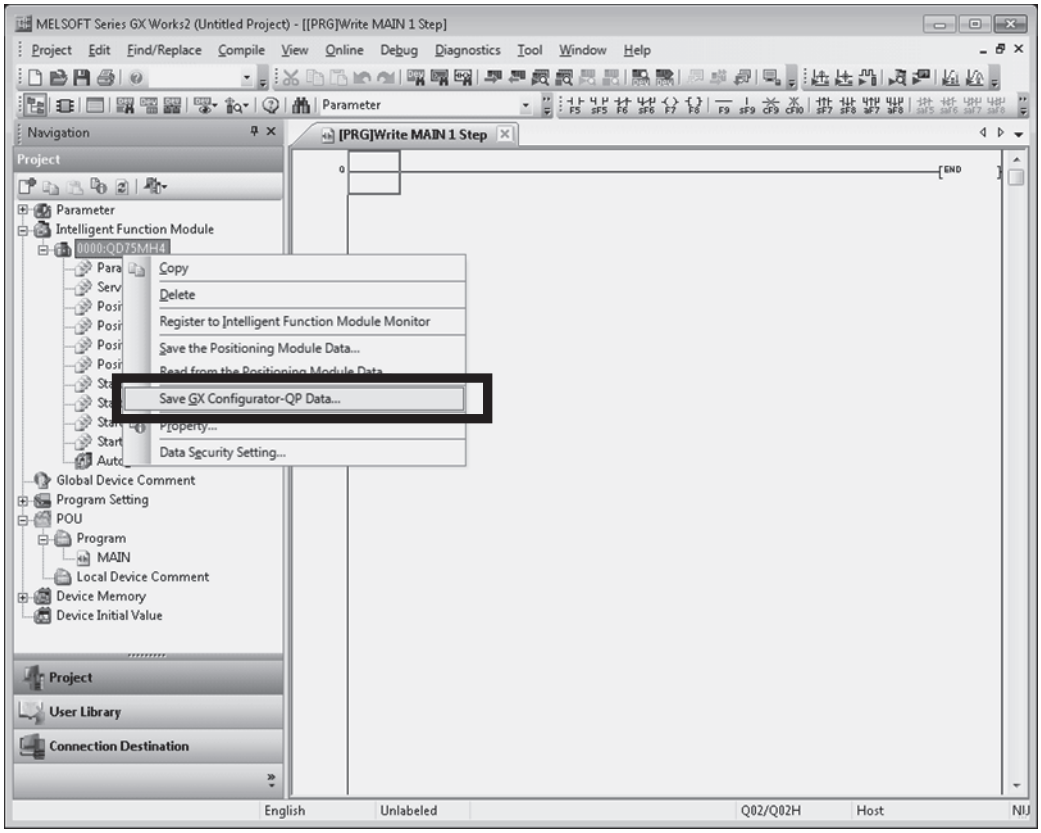

(5) Specify the target module.
Specify the model and the head XY address of the target module, then click the [OK] button.

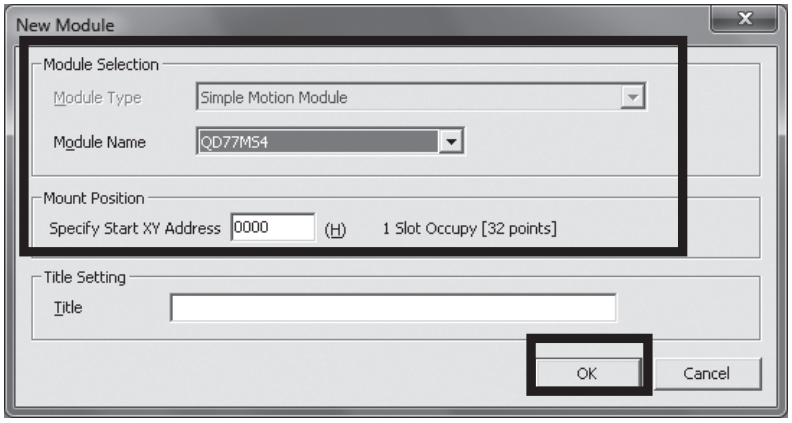

(6) Execute servo parameter conversion.
Select the target servo amplifier setting and click the [OK] button.
The servo parameters are converted as follows depending on the target servo amplifier setting.
When "SSCNET III / H" is selected, MR-J2S-_B_ is converted to MR-J4-_B_.
When "SSCNET III" is selected, MR-J2S-_B_ is converted to MR-J3-_B_.

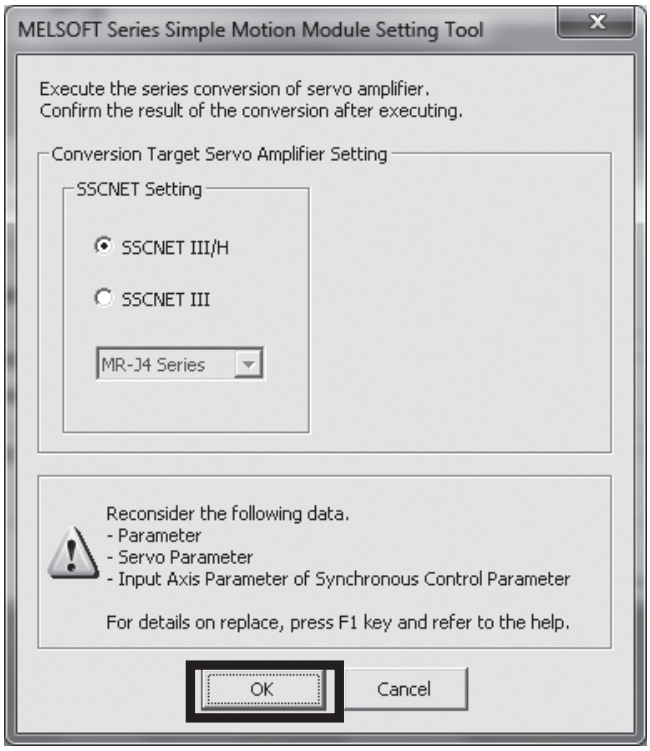

2.4.2 Changing the motion controller A series/Q17nCPU to Q17nDSCPU/Q170MSCPU(-S1)

(1) Start MT Developer2.

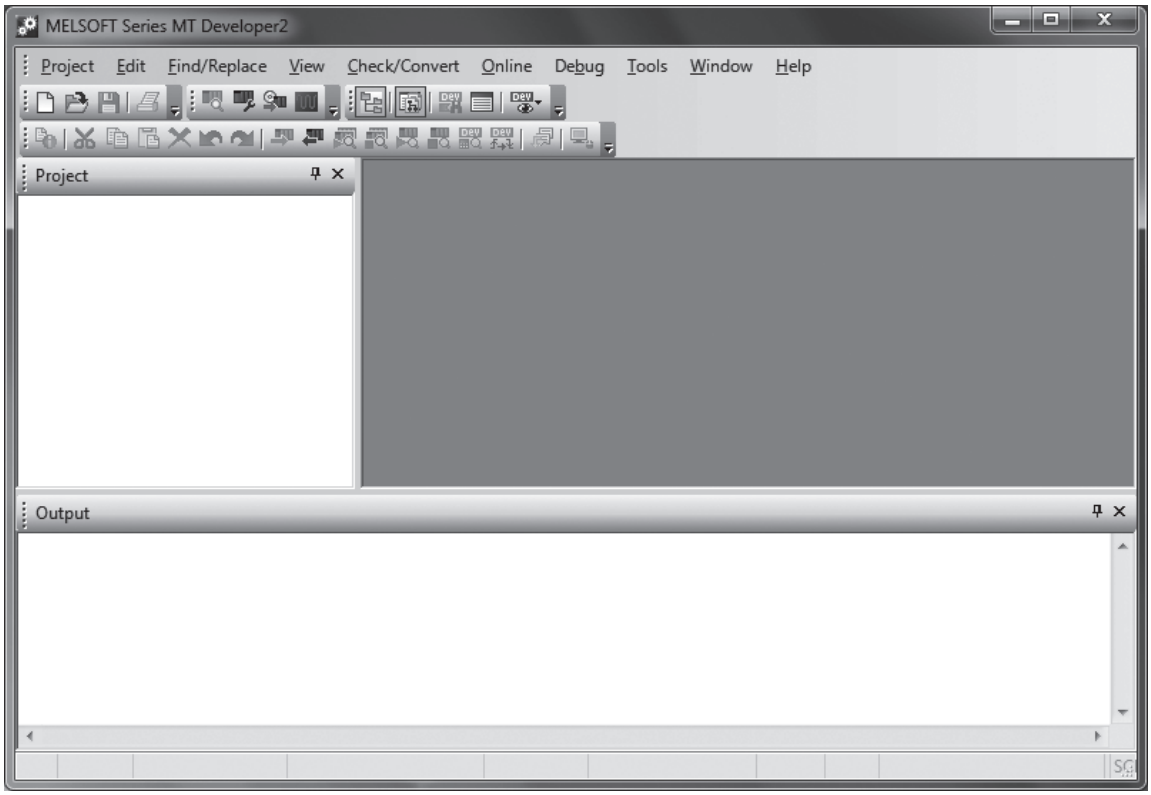

(2) Select the source project.
Click [Project] - [Divert File] - [Diversion of Other Format Project] from the menu to display the Diversion of Other Format Project dialog box. Click the [Browse] button to select the source project.
To divert an MT Developer2 project, click [Project] - [Divert File] - [Utilize MT Developer file format Project] from the menu.

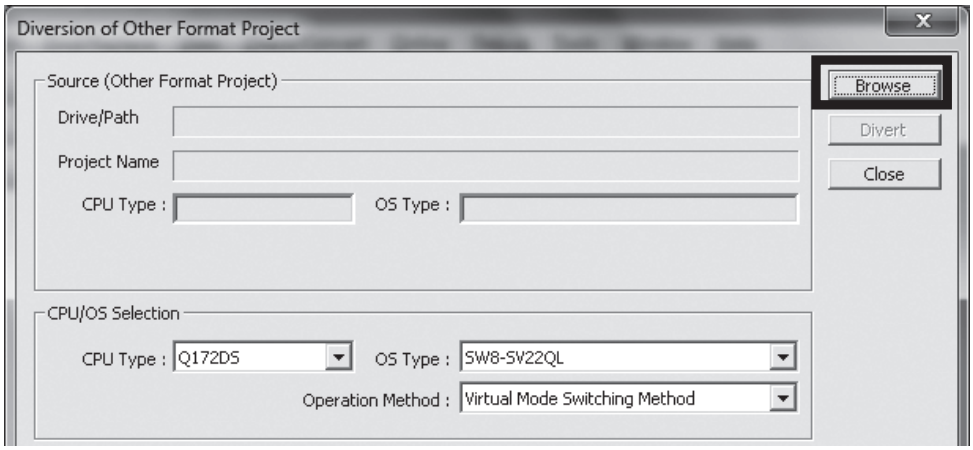

(3) Execute file diversion.
Select the CPU type, OS type, and Operation method in the CPU/OS selection, and click the [Diversion] button.

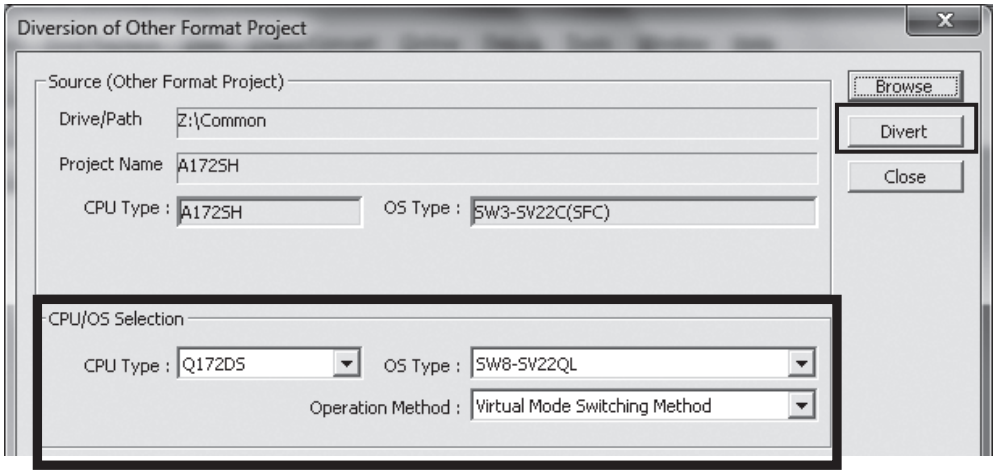

(4) Execute servo parameter conversion.
Select the target servo amplifier setting and click the [OK] button.
The servo parameters are converted as follows depending on the target servo amplifier setting.
When "SSCNET III / H" is selected, MR-J2S-_B_ is converted to MR-J4-_B_.
When "SSCNET III" is selected, MR-J2S-_B_ is converted to MR-J3-_B_.

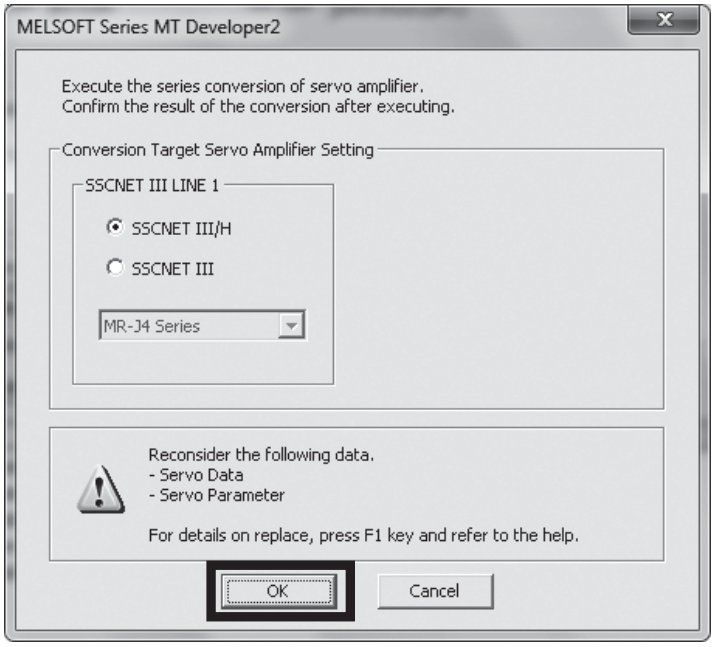

2.4.3 Conversion rules (MR-J2S-_B_ => MR-J4-_B_)

POINT

- The conversion rules in the above table give due consideration to compatibility. However, the servo parameter system of MR-J2S-_B_ and that of MR-J4-_B_ are so different that the rules may not sufficiently apply to cases of special operation (including special specifications). Change the settings as necessary in such cases.
- [Pr. PA19 Parameter writing inhibit] after parameter conversion is the initial value.
  - MR-J4-_B_: [Pr. PA19] = "00ABh"
- When using analog monitor output, perform an operation check because MR-J2S-_B_ and MR-J4-_B_ have different output voltage specifications for droop pulses.
  - MR-J4-_B_: [Pr. PC09]/[Pr. PC10]
- Output signal assignments will be initialized. Change the settings as necessary.
  - MR-J4-_B_ : [Pr. PD07] to [Pr. PD09]
- Various offset parameters cannot be converted. Change the settings as necessary.
  - MR-J4-_B_: [Pr. PC11], [Pr. PC12]
- The conversion rules apply only to the common parameters of MR-J2S-_B_ and MR-J4-_B_.
  Additional parameters of MR-J4-_B_ are set to the initial values of MR-J4-_B_.
- The setting value of the error excessive alarm level is 2. Change the settings as necessary.
  - MR-J4-_B_: [Pr. PC01 Error excessive alarm level]
- The parameter conversion rules are intended for the replacement of "HC-_FS/HA-_FS motors" with "HG motors". When using "HC-_FS/HA-_FS motors" without being replaced, check and change the "electronic gear setting" and "pulse output".(Refer to (2) in Section 2.4.3 and 4. HC-_FS/HA-_FS MOTOR DRIVE.)

(1) Parameters that need to be checked after parameter conversion

Parameter number	Name	Initial value	Setting value	Description
PA04	Function selection A-1	2000h	0_ _ _h	Forced stop deceleration function selection To configure the same settings as those for MR-J2S-_B_, select "Forced stop deceleration function disabled (EM1)".
PA09	Auto tuning response	-	-	Auto tuning response setting Adjust the gain value again after the replacement.
PA15	Encoder output pulse	-	-	When the encoder output pulse setting is a dividing ratio setting, this must be adjusted to match the number of pulses per servo motor rotation. As the parameter converter function converts the setting value into 131072 [pulses] for the MR-J2S-_B_ and 4194304 [pulses] for the MR-J4-_B_, restore the setting value to the value for the MR-J2S-_B_ when replacing the servo amplifier.
PA11	Analog monitor 1 offset	-	-	Set the value as required.
PA12	Analog monitor 2 offset	-	-	Set the value as required.
PD07 to PD09	I/O device selection	-	-	This parameter is not converted by the parameter converter function. Set the parameters as required.

Note. For items that have no setting value listed in the table, refer to "Part 3: Review on Replacement of MR-J2S-_B_ with MR-J4-_B_".

(2) Parameters that need to be set when the HC/HA series servo motor is used without being replaced

1) When the model of a servo amplifier after replacement is MR-J4-_B_

Parameter number	Name	Initial value	Setting value	Description
PA09	Auto tuning response	-	-	Auto tuning response setting Adjust the gain value again after the replacement.
PA10	In-position range	-	-	Use the value of an existing servo amplifier.
PA15	Encoder output pulses	-	-	When the output dividing ratio setting has been selected, use the value of an existing servo amplifier.
PC04	Function selection C-1 Encoder setting selection	-	_ 1 _ _	Set 1: MR-J2S compatible encoder setting.

(3) Conversion rules (MR-J2S-_B_ => MR-J4-_B_)

The following table shows the servo parameter conversion rules from MR-J2S-_B_ (standard) to MR-J4-_B_ standard.

Servo parameters not specified in the following table will be set to the initial values.

MR-J2S-_B_				MR-J4-_B_			Conversion rules
No.	Name	Type	Target	No.	Type	Target	
1	Amplifier setting	Hex	_ _ _ X	PA03	Hex	_ _ _ X	The setting value will be maintained.
2	Regenerative resistor	Hex	_ _ XX	PA02	Hex	_ _ XX	_ _ 00 will be changed to _ _ 00. _ _ 01 will be changed to _ _ 01. _ _ 05 will be changed to _ _ 04. _ _ 08 will be changed to _ _ 05. _ _ 09 will be changed to _ _ 06. _ _ 0B will be changed to _ _ 08. _ _ 0C will be changed to _ _ 09. _ _ 0E will be changed to _ _ FA. _ _ 10 will be changed to _ _ 02. _ _ 11 will be changed to _ _ 03. _ _ 82 will not be changed. _ _ 83 will not be changed. _ _ 84 will not be changed. _ _ 85 will not be changed. _ _ 87 will be changed to _ _ 81. Otherwise, _ _ 00 will be set.
7	Rotation direction setting	Dec	-	PA14	Dec	-	The setting value will be maintained.
8	Auto tuning	Hex	_ _ _ X	PA08	Hex	_ _ _ X	_ _ _ 2 will be changed to _ _ _ 3. _ _ _ 3 will be changed to _ _ _ 2. _ _ _ 4 will be changed to _ _ _ 3. Otherwise, the setting value will be maintained.
9	Servo response setting	Hex	_ _ _ X	PA09	Dec	-	_ _ _ 1 will be changed to 8. _ _ _ 2 will be changed to 11. _ _ _ 3 will be changed to 13. _ _ _ 4 will be changed to 14. _ _ _ 5 will be changed to 16. _ _ _ 6 will be changed to 18. _ _ _ 7 will be changed to 19. _ _ _ 8 will be changed to 21. _ _ _ 9 will be changed to 23. _ _ _ A will be changed to 25. _ _ _ B will be changed to 27. _ _ _ C will be changed to 28. _ _ _ D will be changed to 30. _ _ _ E will be changed to 32. _ _ _ F will be changed to 34. To use the HC/HA series servo motors without being replaced, refer to (2) in Section 2.4.3.
12	Load to motor inertia ratio	Dec	-	PB06	Dec	-	One decimal place will be added.
13	Position loop gain 1	Dec	-	PB07	Dec	-	The setting value will be multiplied by 2/3 and one decimal place will be added.
15	Position loop gain 2	Dec	-	PB08	Dec	-	One decimal place will be added.
16	Speed loop gain 2	Dec	-	PB09	Dec	-	The setting value will be maintained.
17	Speed integral compensation.	Dec	-	PB10	Dec	-	One decimal place will be added.

Hex: hexadecimal parameter; Dec: decimal parameter

MR-J2S-_B_				MR-J4-_B_			Conversion rules
No.	Name	Type	Target	No.	Type	Target	
18	Machine resonance suppression filter 1 (Notch filter)	Hex	_ _ XX	PB01	Hex	_ _ _ X	_ _ 00 will be changed to _ _ _ 0. Otherwise, _ _ _ 2 will be set.
			_ _ XX	PB13	Dec	-	_ _ 00 will be changed to 4500. _ _ 01 will be changed to 4500. _ _ 02 will be changed to 2250. _ _ 03 will be changed to 1500. _ _ 04 will be changed to 1125. _ _ 05 will be changed to 900. _ _ 06 will be changed to 750. _ _ 07 will be changed to 643. _ _ 08 will be changed to 563. _ _ 09 will be changed to 500. _ _ 0A will be changed to 450. _ _ 0B will be changed to 409. _ _ 0C will be changed to 375. _ _ 0D will be changed to 346. _ _ 0E will be changed to 321. _ _ 0F will be changed to 300. _ _ 10 will be changed to 281. _ _ 11 will be changed to 265. _ _ 12 will be changed to 250. _ _ 13 will be changed to 237. _ _ 14 will be changed to 225. _ _ 15 will be changed to 214. _ _ 16 will be changed to 205. _ _ 17 will be changed to 196. _ _ 18 will be changed to 188. _ _ 19 will be changed to 180. _ _ 1A will be changed to 173. _ _ 1B will be changed to 167. _ _ 1C will be changed to 160. _ _ 1D will be changed to 155. _ _ 1E will be changed to 150. _ _ 1F will be changed to 145.
			_ X_ _	PB14	Hex	_ _ X_	The setting value will be maintained.
19	Feed forward gain	Dec	-	PB04	Dec	-	The setting value will be maintained.
20	In-position range	Dec	-	PA10	Dec	-	When the setting value of No. 6 is 0, the setting value of No. 20 will be multiplied by 16. When the setting value of No. 6 is 1, the setting value of No. 20 will be multiplied by 32. When the setting value of No. 6 is 6, the setting value of No. 20 will be multiplied by 8. When the setting value of No. 6 is 7 or 255, the setting value of No. 20 will be doubled. When the above value is 4095 or smaller, the value will be multiplied by 16. When the above value is 4096 or larger, 65535 will be set. To use the HC/HA series servo motors without being replaced, refer to (2) in Section 2.4.3.
21	Electromagnetic brake sequence output	Dec	-	PC02	Dec	-	The setting value will be maintained.

Hex: hexadecimal parameter; Dec: decimal parameter

MR-J2S-_B_				MR-J4-_B_			Conversion rules
No.	Name	Type	Target	No.	Type	Target	
22	Analog monitor output	Hex	_ X_ _	PC09	Hex	_ _ _ X	_ 9_ _ will be changed to _ _ _ 8. _ A _ _ will be changed to _ _ _ 9. _ B _ _ will be changed to _ _ _ D. Otherwise, the setting value will be maintained.
			_ _ _ X	PC10	Hex	_ _ _ X	_ _ _ 9 will be changed to _ _ _ 8. _ _ _ A will be changed to _ _ _ 9. _ _ _ B will be changed to _ _ _ D. Otherwise, the setting value will be maintained.
23	Optional function 1 (Servo forced stop selection)	Hex	_ _ _ X	PA04	Hex	_ X_ _	The setting value will be maintained.
24	Optional function 2 (Slight vibration suppression control selection) (Motor-less operation selection)	Hex	_ _ X_	PB24	Hex	_ _ _ X	The setting value will be maintained.
			_ X_ _	PC05	Hex	_ _ _ X	The setting value will be maintained.
25	Low-pass filter/adaptive vibration suppression control	Hex	_ _ X_	PB18	Dec	-	_ _ 1 _ will be changed to 18000. Otherwise, the initial value will be set.
			_ _ X_	PB23	Hex	_ _ X_	The setting value will be maintained.
30	Zero speed	Dec	-	PC07	Dec	-	The setting value will be maintained.
31	Error excessive alarm level	Dec	-	PC01	Dec	-	The value will be (No. 31) ÷ 40. When the setting value is 1 or smaller, 1 will be set.
32	Optional function 5 (PI-PID control switching selection)	Hex	_ _ _ X	PB24	Hex	_ _ X_	_ _ _ 0 will be changed to _ _ 0 _. _ _ _ 1 will be changed to _ _ 0 _. _ _ _ 2 will be changed to _ _ 3 _. Otherwise, the initial value will be set.
33	Optional function 6 (Encoder pulse output setting selection)	Hex	_ X_ _	PC03	Hex	_ _ X_	The setting value will be maintained.
36	Speed differential compensation	Dec	-	PB11	Dec	-	The setting value will be maintained.
33	Optional function 6 (Encoder pulse output setting selection)	Hex	_ X_ _	PA15	Dec	-	(1) When the setting value of No. 33 is _ 1 _ _ 32 times the setting value of No. 38 will be set. (2) When the setting value of No. 33 is other than _ 1 _ _ The setting value of No. 38 will be maintained. To use the HC/HA series servo motors without being replaced, refer to (2) in Section 2.4.3.
38	Encoder output pulses	Dec	-				
49	Gain switching selection	Hex	_ _ _ X	PB26	Hex	_ _ _ X	The setting value will be maintained.
50	Gain switching condition	Dec	-	PB27	Dec	-	The setting value will be maintained.
51	Gain switching time constant	Dec	-	PB28	Dec	-	The setting value will be maintained.
52	Load to motor inertia ratio 2	Dec	-	PB29	Dec	-	One decimal place will be added.
15	Position loop gain 2	Dec	-	PB30	Dec	-	The value will be (No. 15) × (No. 53) ÷ 100. One decimal place will be added.
53	Position loop gain 2 changing ratio	Dec	-				
16	Speed loop gain 2	Dec	-	PB31	Dec	-	The value will be (No. 16) × (No. 54) ÷ 100.
54	Speed loop gain 2 changing ratio	Dec	-				
17	Speed integral compensation.	Dec	-	PB32	Dec	-	One decimal place will be added to (No. 17) × (No. 55) ÷ 100. When the setting value is 5000.0 or larger, 5000.0 will be set.
55	Speed integral compensation gain 2 change ratio	Dec	-				
60	Option function C	Hex	_ X_ _	PC03	Hex	_ _ _ X	The setting value will be maintained.

Hex: hexadecimal parameter; Dec: decimal parameter

MR-J2S-_B_				MR-J4-_B_			Conversion rule
No.	Name	Type	Target	No.	Type	Target	
61	Machine resonance suppression filter 2	Hex	_ _ XX	PB15	Dec	-	_ _ 00 will be changed to 4500. _ _ 01 will be changed to 4500. _ _ 02 will be changed to 2250. _ _ 03 will be changed to 1500. _ _ 04 will be changed to 1125. _ _ 05 will be changed to 900. _ _ 06 will be changed to 750. _ _ 07 will be changed to 643. _ _ 08 will be changed to 563. _ _ 09 will be changed to 500. _ _ 0A will be changed to 450. _ _ 0B will be changed to 409. _ _ 0C will be changed to 375. _ _ 0D will be changed to 346. _ _ 0E will be changed to 321. _ _ 0F will be changed to 300. _ _ 10 will be changed to 281. _ _ 11 will be changed to 265. _ _ 12 will be changed to 250. _ _ 13 will be changed to 237. _ _ 14 will be changed to 225. _ _ 15 will be changed to 214. _ _ 16 will be changed to 205. _ _ 17 will be changed to 196. _ _ 18 will be changed to 188. _ _ 19 will be changed to 180. _ _ 1A will be changed to 173. _ _ 1B will be changed to 167. _ _ 1C will be changed to 160. _ _ 1D will be changed to 155. _ _ 1E will be changed to 150. _ _ 1F will be changed to 145.
			_ _ XX	PB16	Hex	_ _ _ X	_ _ 00 will be changed to _ _ _ 0.
							Otherwise, _ _ _ 1 will be set.
			_ X_ _	PB16	Hex	_ _ X_	The setting value will be maintained.

Hex: hexadecimal parameter; Dec: decimal parameter

3. COMMON POINTS TO NOTE

3.1 Points to Note When Replacing a Battery

POINT

- The MR-BAT and A6BAT battery for MR-J2S and the MR-J2M-BT battery unit for MR-J2M cannot be used due to different battery voltage specifications.
- The battery replacement procedures for MR-J2S/J2M and for MR-J4 are different.
  (The HC/HA motor has a super capacitor condenser.)
  When replacing the battery for MR-J4, observe the following points and procedures.

⚠WARNING

- Before replacing a battery, turn off the main circuit power and wait for 15 minutes or longer until the charge lamp turns off. Then, check the voltage between P+ and N- with a voltage tester or others. Otherwise, an electric shock may occur. In addition, when confirming whether the charge lamp is off or not, always confirm it from the front of the servo amplifier.

⚠CAUTION

- The internal circuits of the servo amplifier may be damaged by static electricity. Always take the following precautions.
  • Ground human body and work bench.
  • Do not touch the conductive areas, such as connector pins and electrical parts, directly by hand.

POINT

- Replacing battery with the control circuit power off will erase the absolute position data.
- Verify that the battery for replacement is within its service life.

POINT

- Replace the old battery with only the control circuit power supply turned on. Replacing battery with the control circuit power on will not erase the absolute position data.

3.1.1 Servo amplifier battery mounting method

POINT
●For the servo amplifier with a battery holder on the bottom, it is not possible to wire for the earth with the battery installed. Insert the battery after executing the earth wiring of the servo amplifier.

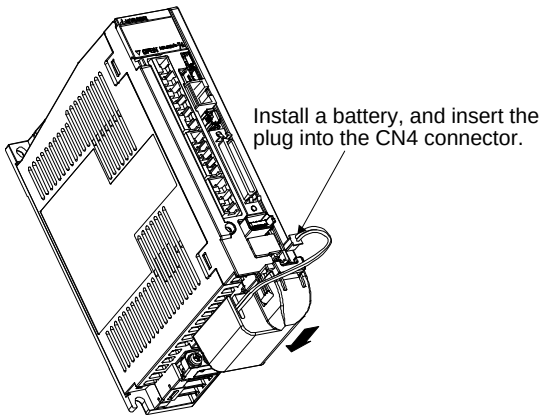

MR-J4-350_ or less

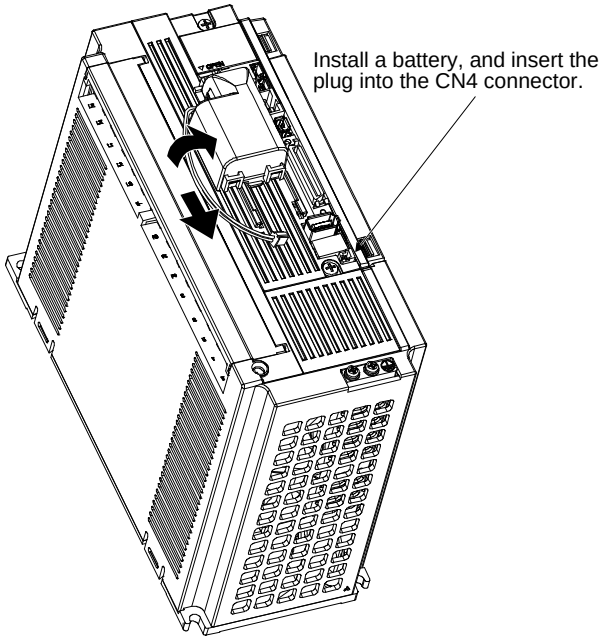

MR-J4-500_ or more

3.1.2 Disassembly method

⚠CAUTION	●Pulling out the connector of the battery without the lock release lever pressed may damage the CN4 connector of the servo amplifier or the connector of the battery.

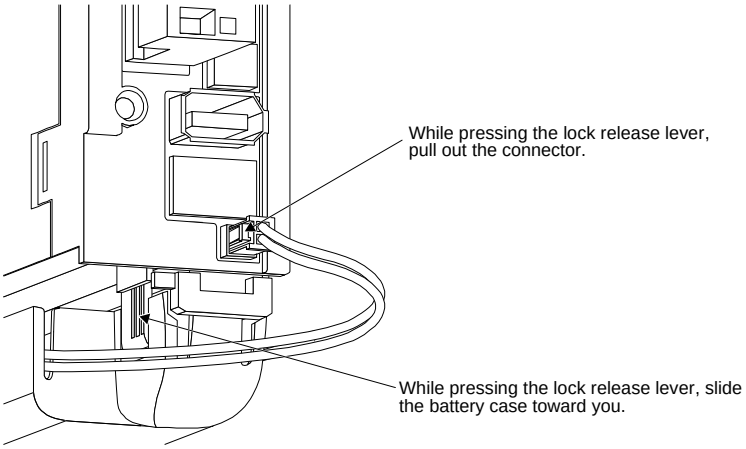

3.1.3 Replacement procedure of MR-BAT6V1SET built-in battery

When the MR-BAT6V1SET reaches the end of its life, replace the MR-BAT6V1 battery in the MR-BAT6V1SET.

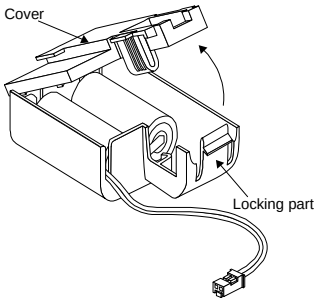

1) While pressing the locking part, open the cover.

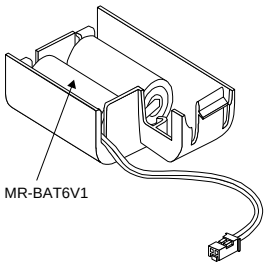

2) Replace the battery with a new MR-BAT6V1.

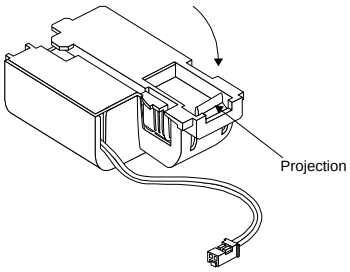

3) Press the cover until it is fixed with the projection of the locking part to close the cover.

4. HC-_FS /HA-_FS MOTOR DRIVE

4.1 Parameter setting

(1) MR-J4-_A_

When driving the HC-_FS /HA-_FS series servo motor with MR-J4-_A_, configure [Pr. PC22] at "_ 1 _ _" and select the encoder setting compatible with MR-J2S. If there is an error in the setting, [AL.16: Encoder initial communication error 1] or [AL.20: Encoder normal communication error 1] occurs.

No./symbol/name	Setting digit	Function	Initial value [unit]
PC22 **COP1 Function selection C-1	_ _ _ x	For manufacturer setting	0h
	_ _ x _		0h
	_ x _ _	Encoder setting selection 0: MR-J4 compatible encoder setting **1: MR-J2S compatible encoder setting** If there is an error in the setting, [AL.16: Encoder initial communication error 1] or [AL.20: Encoder normal communication error 1] occurs.	0h
	x _ _ _	Encoder cable communication method selection 0: Two-wire type 1: Four-wire type If there is an error in the setting, [AL.16: Encoder initial communication error 1] or [AL.20: Encoder normal communication error 1] occurs.	0h

(2) MR-J4-_B_

When driving the HC/HA series servo motor with MR-J4-_B_, configure [Pr. PC04] at "_ 1 _ _" and select a compatible encoder setting with MR-J2S. If there is an error in the setting, [AL.16: Encoder initial communication error 1] or [AL.20: Encoder normal communication error 1] occurs.

No./symbol/name	Setting digit	Function	Initial value [unit]
PC04 **COP1 Function selection C-1	_ _ _ x	For manufacturer setting	0h
	_ _ x _		0h
	_ x _ _	Encoder setting selection 0: MR-J4 compatible encoder setting **1: MR-J2S compatible encoder setting** If there is an error in the setting, [AL.16: Encoder initial communication error 1] or [AL.20: Encoder normal communication error 1] occurs.	0h
	x _ _ _	Encoder cable communication method selection 0: Two-wire type 1: Four-wire type If there is an error in the setting, [AL.16: Encoder initial communication error 1] or [AL.20: Encoder normal communication error 1] occurs.	0h

POINT

- When using HC/HA series servo motors without being replaced, check and change the "electronic gear setting" and "pulse output".
  For MR-J4-_A_, refer to Section 2.3.5 (5). For MR-J4-_B_, refer to Section 2.4.3 (2).
- Refer to "Appendix 1. 13 OPTIONS AND PERIPHERAL EQUIPMENT" for "connected cables" when using the HC/HA series servo motors without replacing.
- When driving the HC-_FS/HA-_FS series servo motors with the MR-J4-_A_/MR-J4-_B_, use regenerative options that are to be used for the MR-J4 series servo amplifiers.
  For details regarding combinations of servo amplifiers and regenerative options, refer to "1. COMPARISON TABLE OF REGENERATIVE OPTION COMBINATIONS" of "Part 9: Review on Replacement of Optional Peripheral Equipment".

4.2 Corresponding Software Version

Servo motor series name	Servo motor model	Servo amplifier model	Standard software corresponding version (Note)	
			General-purpose interface	SSCNET interface
HC-KFS series	HC-KFS053	MR-J4-10_(-RJ)	A8 or later	
	HC-KFS13	MR-J4-10_(-RJ)	A4 or later	A8 or later
	HC-KFS23	MR-J4-20_(-RJ)	A4 or later	A8 or later
	HC-KFS43	MR-J4-40_(-RJ)	A4 or later	A8 or later
	HC-KFS73	MR-J4-70_(-RJ)	A4 or later	A8 or later
HC-KFS high-speed rotation series	HC-KFS46	MR-J4-70_(-RJ)	A6 or later	
	HC-KFS410	MR-J4-70_(-RJ)	A6 or later	
HC-MFS series	HC-MFS053	MR-J4-10_(-RJ)	A4 or later	A8 or later
	HC-MFS13	MR-J4-10_(-RJ)	A4 or later	A8 or later
	HC-MFS23	MR-J4-20_(-RJ)	A4 or later	A8 or later
	HC-MFS43	MR-J4-40_(-RJ)	A4 or later	A8 or later
	HC-MFS73	MR-J4-70_(-RJ)	A4 or later	A8 or later
HC-LFS series	HC-LFS52	MR-J4-60_(-RJ)	A8 or later	
	HC-LFS102	MR-J4-100_(-RJ)	A8 or later	
	HC-LFS152	MR-J4-200_(-RJ)	A8 or later	
	HC-LFS202	MR-J4-350_(-RJ)	A8 or later	
	HC-LFS302	MR-J4-500_(-RJ)	A8 or later	
HC-SFS 1000 r/min series	HC-SFS81	MR-J4-100_(-RJ)	A8 or later	
	HC-SFS121	MR-J4-200_(-RJ)	A8 or later	
	HC-SFS201	MR-J4-200_(-RJ)	A8 or later	
	HC-SFS301	MR-J4-350_(-RJ)	A8 or later	
HC-SFS 2000 r/min series	HC-SFS52	MR-J4-60_(-RJ)	A4 or later	A8 or later
	HC-SFS102	MR-J4-100_(-RJ)	A4 or later	A8 or later
	HC-SFS152	MR-J4-200_(-RJ)	A4 or later	A8 or later
	HC-SFS202	MR-J4-200_(-RJ)	A4 or later	A8 or later
	HC-SFS352	MR-J4-350_(-RJ)	A4 or later	A8 or later
	HC-SFS502	MR-J4-500_(-RJ)	A8 or later	
	HC-SFS702	MR-J4-700_(-RJ)	A8 or later	
	HC-SFS524	MR-J4-60_4(-RJ)	A8 or later	
	HC-SFS1024	MR-J4-100_4(-RJ)	A8 or later	
	HC-SFS1524	MR-J4-200_4(-RJ)	A8 or later	
	HC-SFS2024	MR-J4-200_4(-RJ)	A8 or later	
	HC-SFS3524	MR-J4-350_4(-RJ)	A8 or later	
	HC-SFS5024	MR-J4-500_4(-RJ)	A8 or later	
	HC-SFS7024	MR-J4-700_4(-RJ)	A8 or later	

Note. Only J4 mode is supported. J3 compatibility mode is not supported.

Servo motor series name	Servo motor model	Servo amplifier model	Standard software corresponding version (Note)	
			General-purpose interface	SSCNET interface
HC-SFS 3000 r/min series	HC-SFS53	MR-J4-60_(-RJ)	A8 or later	
	HC-SFS103	MR-J4-100_(-RJ)	A8 or later	
	HC-SFS153	MR-J4-200_(-RJ)	A8 or later	
	HC-SFS203	MR-J4-200_(-RJ)	A8 or later	
	HC-SFS353	MR-J4-350_(-RJ)	A8 or later	
HC-RFS series	HC-RFS103	MR-J4-200_(-RJ)	A8 or later	
	HC-RFS153	MR-J4-200_(-RJ)	A8 or later	
	HC-RFS203	MR-J4-350_(-RJ)	A8 or later	
	HC-RFS353	MR-J4-500_(-RJ)	B0 or later	
	HC-RFS503	MR-J4-500_(-RJ)	A8 or later	
HA-LFS 1000 r/min series	HA-LFS601	MR-J4-700_(-RJ)	D5 or later	
	HA-LFS801	MR-J4-11K_(-RJ)	Not compatible	
	HA-LFS12K1	MR-J4-11K_(-RJ)	Not compatible	
	HA-LFS15K1	MR-J4-15K_(-RJ)	Not compatible	
	HA-LFS20K1	MR-J4-22K_(-RJ)	Not compatible	
	HA-LFS25K1	MR-J4-22K_(-RJ)	Not compatible	
	HA-LFS6014	MR-J4-700_4(-RJ)	Not compatible	
	HA-LFS8014	MR-J4-11K_4(-RJ)	D5 or later	
	HA-LFS12K14	MR-J4-11K_4(-RJ)	Not compatible	
	HA-LFS15K14	MR-J4-15K_4(-RJ)	Not compatible	
	HA-LFS20K14	MR-J4-22K_4(-RJ)	Not compatible	
HA-LFS 1500 r/min series	HA-LFS701M	MR-J4-700_(-RJ)	Not compatible	
	HA-LFS11K1M	MR-J4-11K_(-RJ)	D5 or later	
	HA-LFS15K1M	MR-J4-15K_(-RJ)	Not compatible	
	HA-LFS22K1M	MR-J4-22K_(-RJ)	Not compatible	
	HA-LFS701M4	MR-J4-700_4(-RJ)	B4 or later	
	HA-LFS11K1M4	MR-J4-11K_4(-RJ)	Not compatible	
	HA-LFS15K1M4	MR-J4-15K_4(-RJ)	B4 or later	
	HA-LFS22K1M4	MR-J4-22K_4(-RJ)	D5 or later	
HA-LFS 2000 r/min series	HA-LFS502	MR-J4-500_(-RJ)	A8 or later	
	HA-LFS702	MR-J4-700_(-RJ)	A8 or later	
	HA-LFS11K2	MR-J4-11K_(-RJ)	B0 or later	
	HA-LFS15K2	MR-J4-15K_(-RJ)	B0 or later	
	HA-LFS22K2	MR-J4-22K_(-RJ)	B0 or later	
	HA-LFS11K24	MR-J4-11K_4(-RJ)	B8 or later	
	HA-LFS15K24	MR-J4-15K_4(-RJ)	B4 or later	
	HA-LFS22K24	MR-J4-22K_4(-RJ)	B8 or later	
HC-UFS 2000 r/min series	HC-UFS72	MR-J4-70_(-RJ)	B0 or later	
	HC-UFS152	MR-J4-200_(-RJ)	B0 or later	
	HC-UFS202	MR-J4-350_(-RJ)	B0 or later	
	HC-UFS352	MR-J4-500_(-RJ)	B0 or later	
	HC-UFS502	MR-J4-500_(-RJ)	B0 or later	
HC-UFS 3000 r/min series	HC-UFS13	MR-J4-10_(-RJ)	A8 or later	
	HC-UFS23	MR-J4-20_(-RJ)	A8 or later	
	HC-UFS43	MR-J4-40_(-RJ)	A8 or later	
	HC-UFS73	MR-J4-70_(-RJ)	A8 or later	

Note. Only J4 mode is supported. J3 compatibility mode is not supported.

Servo motor series name	Servo motor model	Converter unit model	Servo amplifier model	Standard software Supported version (Note)	
				General-purpose interface	SSCNET interface
HA-LFS 1000 r/min series	HA-LFS30K1	MR-CR55K	MR-J4-DU30K_(-RJ)	Not compatible	
	HA-LFS37K1		MR-J4-DU37K_(-RJ)	Not compatible	
	HA-LFS25K14	MR-CR55K4	MR-J4-DU30K_4(-RJ)	Not compatible	
	HA-LFS30K14		MR-J4-DU30K_4(-RJ)	Not compatible	
	HA-LFS37K14		MR-J4-DU37K_4(-RJ)	Not compatible	
HA-LFS 1500 r/min series	HA-LFS30K1M	MR-CR55K	MR-J4-DU30K_(-RJ)	Not compatible	
	HA-LFS37K1M		MR-J4-DU37K_(-RJ)	Not compatible	
	HA-LFS30K1M4	MR-CR55K4	MR-J4-DU30K_4(-RJ)	D5 or later	
	HA-LFS37K1M4		MR-J4-DU37K_4(-RJ)	Not compatible	
	HA-LFS45K1M4		MR-J4-DU45K_4(-RJ)	B4 or later	
	HA-LFS50K1M4		MR-J4-DU55K_4(-RJ)	D4 or later	
HA-LFS 2000 r/min series	HA-LFS30K2	MR-CR55K	MR-J4-DU30K_(-RJ)	B8 or later	
	HA-LFS37K2		MR-J4-DU37K_(-RJ)	B8 or later	
	HA-LFS30K24	MR-CR55K4	MR-J4-DU30K_4(-RJ)	B8 or later	
	HA-LFS37K24		MR-J4-DU37K_4(-RJ)	B8 or later	
	HA-LFS45K24		MR-J4-DU45K_4(-RJ)	B8 or later	
	HA-LFS55K24		MR-J4-DU55K_4(-RJ)	B9 or later	

Note Only J4 mode is supported. J3 compatibility mode is not supported.

4.2.1 Method for checking the software version

Start MR Configurator2 (SW1DNC-MRC2-E).
Click [Diagnosis] - [System Configuration] from the menu to display the servo amplifier software version number.

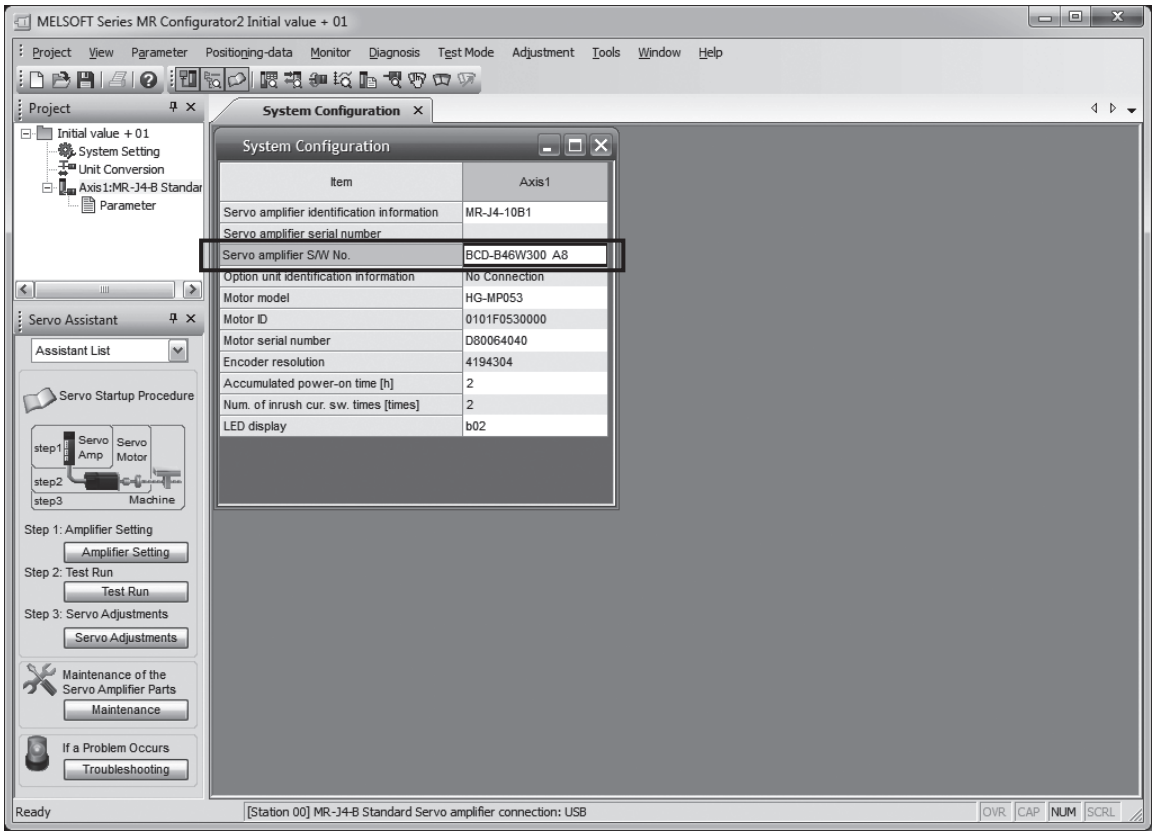

Servo amplifier software version number: BCD-○○○○○○○ ○○

↓ ↓

Software version number software version

4.3 Overload protection characteristics (Important Points for Combining the drive unit MR-J4-DU55K_4 and HA-LFS motor)

When using the drive unit MR-J4-DU55K_4 in combination with the HA-LFS motor, the overload protection characteristics are as shown in the diagram.
For MR-J2S-55K_4, please check your operation pattern, since the overload protection curve (broken line) of the overload ratio over 200% at the servo-lock is added.

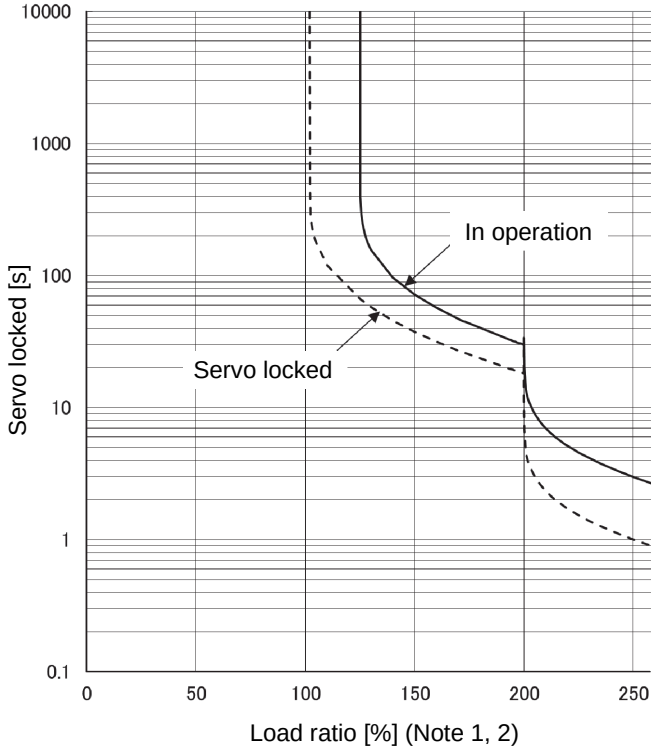

Note 1. When the servo motor is stopped (servo-lock state) or is operating at a low speed of 30 r/min or less, and an operation generating a torque of 100% or more of the rated torque is carried out at an abnormally high frequency, there is a possibility that the servo amplifier may malfunction even though it is within the electronic thermal protection.

2. The overload ratio over 100% indicates the rated output of a converter unit. For the rated output, refer to section 1.2.1 of "MR-CV_/MR-CR55K_/MR-J4-DU_(-RJ) Instruction Manual".

Part 8
Review on Replacement of Motor

Part 8: Review on Replacement of Motor

1. SERVO MOTOR REPLACEMENT

1.1 Servo Motor Substitute Model and Compatibility

POINT

●Compatibility here means the mounting compatibility.
For details about the compatibility of servo motor dimensions, reducer specifications, moment of inertia, connector specifications, and torque characteristics, refer to "2 COMPARISON OF SERVO MOTOR SPECIFICATIONS".

(1) HC-KFS motor

Series	Model	Example of replacement model	Compatibility (○: Compatible)	Note
Small capacity, low inertia HC-KFS series Standard/With brake (B): With brake	HC-KFS053(B)	HG-KR053(B)	○	• The torque characteristics of ◆ do not correspond to the range up to the high-speed rotation. For further details, refer to "2.7 Comparison of Servo Motor Torque Characteristics". • The capacity of the corresponding servo amplifier will be different if a model marked with ◇ is replaced. The corresponding servo amplifier for HG-KR43 is MR-J4-40_.
	HC-KFS13(B)	HG-KR13(B)		
	HC-KFS23(B)	HG-KR23(B)		
	HC-KFS43(B)	HG-KR43(B)		
	HC-KFS73(B)	HG-KR73(B)		
	HC-KFS46 ◇	HG-KR43		
	HC-KFS410 ◇	HG-KR43 ◆		
Small capacity, low inertia HC-KFS series with general reducer (G1) (B): With brake	HC-KFS053(B)G1 1/5	HG-KR053(B)G1 1/5	○	• Because the reduction gears of models marked with ◆ are different from the actual reduction ratio, it is required that an electronic gear be set up. Refer to "2.4 Comparison of actual reduction ratios for geared servo motors" for the details.
	HC-KFS053(B)G1 1/12	HG-KR053(B)G1 1/12		
	HC-KFS053(B)G1 1/20	HG-KR053(B)G1 1/20		
	HC-KFS13(B)G1 1/5	HG-KR13(B)G1 1/5		
	HC-KFS13(B)G1 1/12	HG-KR13(B)G1 1/12		
	HC-KFS13(B)G1 1/20	HG-KR13(B)G1 1/20		
	HC-KFS23(B)G1 1/5	HG-KR23(B)G1 1/5		
	HC-KFS23(B)G1 1/12	HG-KR23(B)G1 1/12 ◆		
	HC-KFS23(B)G1 1/20	HG-KR23(B)G1 1/20 ◆		
	HC-KFS43(B)G1 1/5	HG-KR43(B)G1 1/5		
	HC-KFS43(B)G1 1/12	HG-KR43(B)G1 1/12 ◆		
	HC-KFS43(B)G1 1/20	HG-KR43(B)G1 1/20 ◆		
	HC-KFS73(B)G1 1/5	HG-KR73(B)G1 1/5		
	HC-KFS73(B)G1 1/12	HG-KR73(B)G1 1/12 ◆		
	HC-KFS73(B)G1 1/20	HG-KR73(B)G1 1/20		
Small capacity, low inertia HC-KFS series with high precision reducer (G2) (B): With brake	HC-KFS053(B)G2 1/5	HG-KR053(B)G7 1/5	(Note 1)	• The reducer efficiency differs. For further details, refer to "2.4.2 Comparison of actual reduction ratios for geared servo motors".
	HC-KFS053(B)G2 1/9	HG-KR053(B)G7 1/9		
	HC-KFS053(B)G2 1/20	HG-KR053(B)G7 1/21		
	HC-KFS053(B)G2 1/29	HG-KR053(B)G7 1/33		
	HC-KFS13(B)G2 1/5	HG-KR13(B)G7 1/5		
	HC-KFS13(B)G2 1/9	HG-KR13(B)G7 1/11		
	HC-KFS13(B)G2 1/20	HG-KR13(B)G7 1/21		
	HC-KFS13(B)G2 1/29	HG-KR13(B)G7 1/33		
	HC-KFS23(B)G2 1/5	HG-KR23(B)G7 1/5		
	HC-KFS23(B)G2 1/9	HG-KR23(B)G7 1/11		
	HC-KFS23(B)G2 1/20	HG-KR23(B)G7 1/21		
	HC-KFS23(B)G2 1/29	HG-KR23(B)G7 1/33		
	HC-KFS43(B)G2 1/5	HG-KR43(B)G7 1/5		
	HC-KFS43(B)G2 1/9	HG-KR43(B)G7 1/11		
	HC-KFS43(B)G2 1/20	HG-KR43(B)G7 1/21		
	HC-KFS43(B)G2 1/29	HG-KR43(B)G7 1/33		
	HC-KFS73(B)G2 1/5	HG-KR73(B)G7 1/5		
	HC-KFS73(B)G2 1/9	HG-KR73(B)G7 1/11		
	HC-KFS73(B)G2 1/20	HG-KR73(B)G7 1/21		
	HC-KFS73(B)G2 1/29	HG-KR73(B)G7 1/33		

Note 1. For mounting dimensions, refer to "2.3 Comparison of Mounting Dimensions for Geared Servo Motors".
2. The power supply and encoder connector will be changed. For further details, refer to "2.6 Comparison of Servo Motor Connector Specifications".
For replacement using the existing wiring, use a renewal tool.

Series	Model	Example of replacement model	Compatibility (○: Compatible)	Note
Small capacity, low inertia HC-KFS series with high precision reducer Flange output type (G5) (B): With brake	HC-KFS053(B)G5 1/5	HG-KR053(B)G5 1/5	○	
	HC-KFS053(B)G5 1/11	HG-KR053(B)G5 1/11		
	HC-KFS053(B)G5 1/21	HG-KR053(B)G5 1/21		
	HC-KFS053(B)G5 1/33	HG-KR053(B)G5 1/33		
	HC-KFS053(B)G5 1/45	HG-KR053(B)G5 1/45		
	HC-KFS13(B)G5 1/5	HG-KR13(B)G5 1/5		
	HC-KFS13(B)G5 1/11	HG-KR13(B)G5 1/11		
	HC-KFS13(B)G5 1/21	HG-KR13(B)G5 1/21		
	HC-KFS13(B)G5 1/33	HG-KR13(B)G5 1/33		
	HC-KFS13(B)G5 1/45	HG-KR13(B)G5 1/45		
	HC-KFS23(B)G5 1/5	HG-KR23(B)G5 1/5		
	HC-KFS23(B)G5 1/11	HG-KR23(B)G5 1/11		
	HC-KFS23(B)G5 1/21	HG-KR23(B)G5 1/21		
	HC-KFS23(B)G5 1/33	HG-KR23(B)G5 1/33		
	HC-KFS23(B)G5 1/45	HG-KR23(B)G5 1/45		
	HC-KFS43(B)G5 1/5	HG-KR43(B)G5 1/5		
	HC-KFS43(B)G5 1/11	HG-KR43(B)G5 1/11		
	HC-KFS43(B)G5 1/21	HG-KR43(B)G5 1/21		
	HC-KFS43(B)G5 1/33	HG-KR43(B)G5 1/33		
	HC-KFS43(B)G5 1/45	HG-KR43(B)G5 1/45		
	HC-KFS73(B)G5 1/5	HG-KR73(B)G5 1/5		
	HC-KFS73(B)G5 1/11	HG-KR73(B)G5 1/11		
	HC-KFS73(B)G5 1/21	HG-KR73(B)G5 1/21		
	HC-KFS73(B)G5 1/33	HG-KR73(B)G5 1/33		
	HC-KFS73(B)G5 1/45	HG-KR73(B)G5 1/45		
Small capacity, low inertia HC-KFS series with high precision reducer Shaft output type (G7) (B): With brake	HC-KFS053(B)G7 1/5	HG-KR053(B)G7 1/5	○	
	HC-KFS053(B)G7 1/11	HG-KR053(B)G7 1/11		
	HC-KFS053(B)G7 1/21	HG-KR053(B)G7 1/21		
	HC-KFS053(B)G7 1/33	HG-KR053(B)G7 1/33		
	HC-KFS053(B)G7 1/45	HG-KR053(B)G7 1/45		
	HC-KFS13(B)G7 1/5	HG-KR13(B)G7 1/5		
	HC-KFS13(B)G7 1/11	HG-KR13(B)G7 1/11		
	HC-KFS13(B)G7 1/21	HG-KR13(B)G7 1/21		
	HC-KFS13(B)G7 1/33	HG-KR13(B)G7 1/33		
	HC-KFS13(B)G7 1/45	HG-KR13(B)G7 1/45		
	HC-KFS23(B)G7 1/5	HG-KR23(B)G7 1/5		
	HC-KFS23(B)G7 1/11	HG-KR23(B)G7 1/11		
	HC-KFS23(B)G7 1/21	HG-KR23(B)G7 1/21		
	HC-KFS23(B)G7 1/33	HG-KR23(B)G7 1/33		
	HC-KFS23(B)G7 1/45	HG-KR23(B)G7 1/45		
	HC-KFS43(B)G7 1/5	HG-KR43(B)G7 1/5		
	HC-KFS43(B)G7 1/11	HG-KR43(B)G7 1/11		
	HC-KFS43(B)G7 1/21	HG-KR43(B)G7 1/21		
	HC-KFS43(B)G7 1/33	HG-KR43(B)G7 1/33		
	HC-KFS43(B)G7 1/45	HG-KR43(B)G7 1/45		
	HC-KFS73(B)G7 1/5	HG-KR73(B)G7 1/5		
	HC-KFS73(B)G7 1/11	HG-KR73(B)G7 1/11		
	HC-KFS73(B)G7 1/21	HG-KR73(B)G7 1/21		
	HC-KFS73(B)G7 1/33	HG-KR73(B)G7 1/33		
	HC-KFS73(B)G7 1/45	HG-KR73(B)G7 1/45		

Note. The power supply and encoder connector will be changed. For further details, refer to "2.6 Comparison of Servo Motor Connector Specifications".
For replacement using the existing wiring, use a renewal tool.

(2) HC-MFS motor

Series	Model	Example of replacement model	Compatibility (○: Compatible)	Note
Small capacity, ultra-low inertia HC-MFS series Standard/With brake (B): With brake	HC-MFS053(B)	HG-MR053(B)	○	
	HC-MFS13(B)	HG-MR13(B)		
	HC-MFS23(B)	HG-MR23(B)		
	HC-MFS43(B)	HG-MR43(B)		
	HC-MFS73(B)	HG-MR73(B)		
Small capacity, ultra-low inertia HC-MFS series with general reducer (G1) (B): With brake	HC-MFS053(B)G1 1/5	HG-KR053(B)G1 1/5	○	• The HG-MR series does not support the geared model. The geared model is supported with the HG-KR series. • Because the reduction gears of models marked with ◆ are different from the actual reduction ratio, it is required that an electronic gear be set up. Refer to "2.4 Comparison of actual reduction ratios for geared servo motors" for the details.
	HC-MFS053(B)G1 1/12	HG-KR053(B)G1 1/12		
	HC-MFS053(B)G1 1/20	HG-KR053(B)G1 1/20		
	HC-MFS13(B)G1 1/5	HG-KR13(B)G1 1/5		
	HC-MFS13(B)G1 1/12	HG-KR13(B)G1 1/12		
	HC-MFS13(B)G1 1/20	HG-KR13(B)G1 1/20		
	HC-MFS23(B)G1 1/5	HG-KR23(B)G1 1/5		
	HC-MFS23(B)G1 1/12	HG-KR23(B)G1 1/12 ◆		
	HC-MFS23(B)G1 1/20	HG-KR23(B)G1 1/20 ◆		
	HC-MFS43(B)G1 1/5	HG-KR43(B)G1 1/5		
	HC-MFS43(B)G1 1/12	HG-KR43(B)G1 1/12 ◆		
	HC-MFS43(B)G1 1/20	HG-KR43(B)G1 1/20 ◆		
	HC-MFS73(B)G1 1/5	HG-KR73(B)G1 1/5		
	HC-MFS73(B)G1 1/12	HG-KR73(B)G1 1/12 ◆		
	HC-MFS73(B)G1 1/20	HG-KR73(B)G1 1/20		
Small capacity, ultra-low inertia HC-MFS series with high precision reducer (G2) (B): With brake	HC-MFS053(B)G2 1/5	HG-KR053(B)G7 1/5	(Note 1)	• The HG-MR series does not support the geared model. The geared model is supported with the HG-KR series. • The reducer efficiency differs. For further details, refer to "2.4.2 Comparison of actual reduction ratios for geared servo motors".
	HC-MFS053(B)G2 1/9	HG-KR053(B)G7 1/9		
	HC-MFS053(B)G2 1/20	HG-KR053(B)G7 1/21		
	HC-MFS053(B)G2 1/29	HG-KR053(B)G7 1/33		
	HC-MFS13(B)G2 1/5	HG-KR13(B)G7 1/5		
	HC-MFS13(B)G2 1/9	HG-KR13(B)G7 1/11		
	HC-MFS13(B)G2 1/20	HG-KR13(B)G7 1/21		
	HC-MFS13(B)G2 1/29	HG-KR13(B)G7 1/33		
	HC-MFS23(B)G2 1/5	HG-KR23(B)G7 1/5		
	HC-MFS23(B)G2 1/9	HG-KR23(B)G7 1/11		
	HC-MFS23(B)G2 1/20	HG-KR23(B)G7 1/21		
	HC-MFS23(B)G2 1/29	HG-KR23(B)G7 1/33		
	HC-MFS43(B)G2 1/5	HG-KR43(B)G7 1/5		
	HC-MFS43(B)G2 1/9	HG-KR43(B)G7 1/11		
	HC-MFS43(B)G2 1/20	HG-KR43(B)G7 1/21		
	HC-MFS43(B)G2 1/29	HG-KR43(B)G7 1/33		
	HC-MFS73(B)G2 1/5	HG-KR73(B)G7 1/5		
	HC-MFS73(B)G2 1/9	HG-KR73(B)G7 1/11		
	HC-MFS73(B)G2 1/20	HG-KR73(B)G7 1/21		
	HC-MFS73(B)G2 1/29	HG-KR73(B)G7 1/33		

Note 1. For mounting dimensions, refer to "2.3 Comparison of Mounting Dimensions for Geared Servo Motors".
2. The power supply and encoder connector will be changed. For further details, refer to "2.6 Comparison of Servo Motor Connector Specifications".
For replacement using the existing wiring, use a renewal tool.

Series	Model	Example of replacement model	Compatibility (○: Compatible)	Note
Small capacity, ultra-low inertia HC-MFS series with high precision reducer Flange output type (G5) (B): With brake	HC-MFS053(B)G5 1/5	HG-KR053(B)G5 1/5	○	• The HG-MR series does not support the geared model. The geared model is supported with the HG-KR series.
	HC-MFS053(B)G5 1/11	HG-KR053(B)G5 1/11		
	HC-MFS053(B)G5 1/21	HG-KR053(B)G5 1/21		
	HC-MFS053(B)G5 1/33	HG-KR053(B)G5 1/33		
	HC-MFS053(B)G5 1/45	HG-KR053(B)G5 1/45		
	HC-MFS13(B)G5 1/5	HG-KR13(B)G5 1/5		
	HC-MFS13(B)G5 1/11	HG-KR13(B)G5 1/11		
	HC-MFS13(B)G5 1/21	HG-KR13(B)G5 1/21		
	HC-MFS13(B)G5 1/33	HG-KR13(B)G5 1/33		
	HC-MFS13(B)G5 1/45	HG-KR13(B)G5 1/45		
	HC-MFS23(B)G5 1/5	HG-KR23(B)G5 1/5		
	HC-MFS23(B)G5 1/11	HG-KR23(B)G5 1/11		
	HC-MFS23(B)G5 1/21	HG-KR23(B)G5 1/21		
	HC-MFS23(B)G5 1/33	HG-KR23(B)G5 1/33		
	HC-MFS23(B)G5 1/45	HG-KR23(B)G5 1/45		
	HC-MFS43(B)G5 1/5	HG-KR43(B)G5 1/5		
	HC-MFS43(B)G5 1/11	HG-KR43(B)G5 1/11		
	HC-MFS43(B)G5 1/21	HG-KR43(B)G5 1/21		
	HC-MFS43(B)G5 1/33	HG-KR43(B)G5 1/33		
	HC-MFS43(B)G5 1/45	HG-KR43(B)G5 1/45		
	HC-MFS73(B)G5 1/5	HG-KR73(B)G5 1/5		
	HC-MFS73(B)G5 1/11	HG-KR73(B)G5 1/11		
	HC-MFS73(B)G5 1/21	HG-KR73(B)G5 1/21		
	HC-MFS73(B)G5 1/33	HG-KR73(B)G5 1/33		
	HC-MFS73(B)G5 1/45	HG-KR73(B)G5 1/45		
Small capacity, ultra-low inertia HC-MFS series with high precision reducer Shaft output type (G7) (B): With brake	HC-MFS053(B)G7 1/5	HG-KR053(B)G7 1/5	○	• The HG-MR series does not support the geared model. The geared model is supported with the HG-KR series.
	HC-MFS053(B)G7 1/11	HG-KR053(B)G7 1/11		
	HC-MFS053(B)G7 1/21	HG-KR053(B)G7 1/21		
	HC-MFS053(B)G7 1/33	HG-KR053(B)G7 1/33		
	HC-MFS053(B)G7 1/45	HG-KR053(B)G7 1/45		
	HC-MFS13(B)G7 1/5	HG-KR13(B)G7 1/5		
	HC-MFS13(B)G7 1/11	HG-KR13(B)G7 1/11		
	HC-MFS13(B)G7 1/21	HG-KR13(B)G7 1/21		
	HC-MFS13(B)G7 1/33	HG-KR13(B)G7 1/33		
	HC-MFS13(B)G7 1/45	HG-KR13(B)G7 1/45		
	HC-MFS23(B)G7 1/5	HG-KR23(B)G7 1/5		
	HC-MFS23(B)G7 1/11	HG-KR23(B)G7 1/11		
	HC-MFS23(B)G7 1/21	HG-KR23(B)G7 1/21		
	HC-MFS23(B)G7 1/33	HG-KR23(B)G7 1/33		
	HC-MFS23(B)G7 1/45	HG-KR23(B)G7 1/45		
	HC-MFS43(B)G7 1/5	HG-KR43(B)G7 1/5		
	HC-MFS43(B)G7 1/11	HG-KR43(B)G7 1/11		
	HC-MFS43(B)G7 1/21	HG-KR43(B)G7 1/21		
	HC-MFS43(B)G7 1/33	HG-KR43(B)G7 1/33		
	HC-MFS43(B)G7 1/45	HG-KR43(B)G7 1/45		
	HC-MFS73(B)G7 1/5	HG-KR73(B)G7 1/5		
	HC-MFS73(B)G7 1/11	HG-KR73(B)G7 1/11		
	HC-MFS73(B)G7 1/21	HG-KR73(B)G7 1/21		
	HC-MFS73(B)G7 1/33	HG-KR73(B)G7 1/33		
	HC-MFS73(B)G7 1/45	HG-KR73(B)G7 1/45		

Note 1. The power supply and encoder connector will be changed. For further details, refer to "2.6 Comparison of Servo Motor Connector Specifications".
For replacement using the existing wiring, use a renewal tool.

(3) HC-SFS motor

Series	Model	Example of replacement model	Compatibility (○: Compatible)	Note
Medium capacity, medium inertia HC-SFS series Standard/With brake (4): 400 V specifications (B): With brake	HC-SFS81(B)	HG-SR81(B)	○	• The total length of the motor will be shorter, so confirm that the motor connector does not interfere with the device side. • The HG-SR servo motor does not have an oil seal. Use HG-SR_J when an oil seal is required.
	HC-SFS121(B)	HG-SR121(B)		
	HC-SFS201(B)	HG-SR201(B)		
	HC-SFS301(B)	HG-SR301(B)		
	HC-SFS52(4)(B)	HG-SR52(4)(B)		
	HC-SFS102(4)(B)	HG-SR102(4)(B)		
	HC-SFS152(4)(B)	HG-SR152(4)(B)		
	HC-SFS202(4)(B)	HG-SR202(4)(B)		
	HC-SFS352(4)(B)	HG-SR352(4)(B)		
	HC-SFS502(4)(B)	HG-SR502(4)(B)		
	HC-SFS702(4)(B)	HG-SR702(4)(B)		
	HC-SFS53(B)	HG-SR52(B)		
	HC-SFS103(B)	HG-SR102(B)		
	HC-SFS153(B)	HG-SR152(B)		
	HC-SFS203(B)	HG-SR202(B)		
	HC-SFS353(B)	HG-SR352(B)		
Medium capacity, medium inertia HC-SFS series with general reducer (4): 400 V specifications (B): With brake G1: Flange-mounting G1H: Foot-mounting	HC-SFS52(4)(B)G1(H) 1/6	HG-SR52(4)(B)G1(H) 1/6	○	• The total length of the motor will be shorter, so confirm that the motor connector does not interfere with the device side.
	HC-SFS52(4)(B)G1(H) 1/11	HG-SR52(4)(B)G1(H) 1/11		
	HC-SFS52(4)(B)G1(H) 1/17	HG-SR52(4)(B)G1(H) 1/17		
	HC-SFS52(4)(B)G1(H) 1/29	HG-SR52(4)(B)G1(H) 1/29		
	HC-SFS52(4)(B)G1(H) 1/35	HG-SR52(4)(B)G1(H) 1/35		
	HC-SFS52(4)(B)G1(H) 1/43	HG-SR52(4)(B)G1(H) 1/43		
	HC-SFS52(4)(B)G1(H) 1/59	HG-SR52(4)(B)G1(H) 1/59		
	HC-SFS102(4)(B)G1(H) 1/6	HG-SR102(4)(B)G1(H) 1/6		
	HC-SFS102(4)(B)G1(H) 1/11	HG-SR102(4)(B)G1(H) 1/11		
	HC-SFS102(4)(B)G1(H) 1/17	HG-SR102(4)(B)G1(H) 1/17		
	HC-SFS102(4)(B)G1(H) 1/29	HG-SR102(4)(B)G1(H) 1/29		
	HC-SFS102(4)(B)G1(H) 1/35	HG-SR102(4)(B)G1(H) 1/35		
	HC-SFS102(4)(B)G1(H) 1/43	HG-SR102(4)(B)G1(H) 1/43		
	HC-SFS102(4)(B)G1(H) 1/59	HG-SR102(4)(B)G1(H) 1/59		
	HC-SFS152(4)(B)G1(H) 1/6	HG-SR152(4)(B)G1(H) 1/6		
	HC-SFS152(4)(B)G1(H) 1/11	HG-SR152(4)(B)G1(H) 1/11		
	HC-SFS152(4)(B)G1(H) 1/17	HG-SR152(4)(B)G1(H) 1/17		
	HC-SFS152(4)(B)G1(H) 1/29	HG-SR152(4)(B)G1(H) 1/29		
	HC-SFS152(4)(B)G1(H) 1/35	HG-SR152(4)(B)G1(H) 1/35		
	HC-SFS152(4)(B)G1(H) 1/43	HG-SR152(4)(B)G1(H) 1/43		
	HC-SFS152(4)(B)G1(H) 1/59	HG-SR152(4)(B)G1(H) 1/59		
	HC-SFS202(4)(B)G1(H) 1/6	HG-SR202(4)(B)G1(H) 1/6		
	HC-SFS202(4)(B)G1(H) 1/11	HG-SR202(4)(B)G1(H) 1/11		
	HC-SFS202(4)(B)G1(H) 1/17	HG-SR202(4)(B)G1(H) 1/17		
	HC-SFS202(4)(B)G1(H) 1/29	HG-SR202(4)(B)G1(H) 1/29		
	HC-SFS202(4)(B)G1(H) 1/35	HG-SR202(4)(B)G1(H) 1/35		
	HC-SFS202(4)(B)G1(H) 1/43	HG-SR202(4)(B)G1(H) 1/43		
	HC-SFS202(4)(B)G1(H) 1/59	HG-SR202(4)(B)G1(H) 1/59		
	HC-SFS352(4)(B)G1(H) 1/6	HG-SR352(4)(B)G1(H) 1/6		
	HC-SFS352(4)(B)G1(H) 1/11	HG-SR352(4)(B)G1(H) 1/11		
	HC-SFS352(4)(B)G1(H) 1/17	HG-SR352(4)(B)G1(H) 1/17		
	HC-SFS352(4)(B)G1(H) 1/29	HG-SR352(4)(B)G1(H) 1/29		
	HC-SFS352(4)(B)G1(H) 1/35	HG-SR352(4)(B)G1(H) 1/35		

Note 1. The power supply and encoder connector will be changed. For further details, refer to "2.6 Comparison of Servo Motor Connector Specifications".
For replacement using the existing wiring, use a renewal tool.

Series	Model	Example of replacement model	Compatibility (○: Compatible)	Note
Medium capacity, medium inertia HC-SFS series with general reducer (4): 400 V specifications (B): With brake G1: Flange-mounting G1H: Foot-mounting	HC-SFS352(4)(B)G1(H) 1/43	HG-SR352(4)(B)G1(H) 1/43	○	• The total length of the motor will be shorter, so confirm that the motor connector does not interfere with the device side.
	HC-SFS352(4)(B)G1(H) 1/59	HG-SR352(4)(B)G1(H) 1/59		
	HC-SFS502(4)(B)G1(H) 1/11	HG-SR502(4)(B)G1(H) 1/11		
	HC-SFS502(4)(B)G1(H) 1/17	HG-SR502(4)(B)G1(H) 1/17		
	HC-SFS502(4)(B)G1(H) 1/29	HG-SR502(4)(B)G1(H) 1/29		
	HC-SFS502(4)(B)G1(H) 1/35	HG-SR502(4)(B)G1(H) 1/35		
	HC-SFS502(4)(B)G1(H) 1/43	HG-SR502(4)(B)G1(H) 1/43		
	HC-SFS702(4)(B)G1(H) 1/11	HG-SR702(4)(B)G1(H) 1/11		
	HC-SFS702(4)(B)G1(H) 1/17	HG-SR702(4)(B)G1(H) 1/17		
	HC-SFS702(4)(B)G1(H) 1/29	HG-SR702(4)(B)G1(H) 1/29		
	HC-SFS702(4)(B)G1(H) 1/35	HG-SR702(4)(B)G1(H) 1/35		
	HC-SFS702(4)(B)G1(H) 1/43	HG-SR702(4)(B)G1(H) 1/43		
Medium capacity, medium inertia HC-SFS series with high precision reducer (G2) (4): 400 V specifications (B): With brake	HC-SFS52(4)(B)G2 1/5	HG-SR52(4)(B)G7 1/5	(Note 1)	• The total length of the motor will be shorter, so confirm that the motor connector does not interfere with the device side. • The reducer efficiency differs. For further details, refer to "2.4.2 Comparison of actual reduction ratios for geared servo motors".
	HC-SFS52(4)(B)G2 1/9	HG-SR52(4)(B)G7 1/11		
	HC-SFS52(4)(B)G2 1/20	HG-SR52(4)(B)G7 1/21		
	HC-SFS52(4)(B)G2 1/29	HG-SR52(4)(B)G7 1/33		
	HC-SFS52(4)(B)G2 1/45	HG-SR52(4)(B)G7 1/45		
	HC-SFS102(4)(B)G2 1/5	HG-SR102(4)(B)G7 1/5		
	HC-SFS102(4)(B)G2 1/9	HG-SR102(4)(B)G7 1/11		
	HC-SFS102(4)(B)G2 1/20	HG-SR102(4)(B)G7 1/21		
	HC-SFS102(4)(B)G2 1/29	HG-SR102(4)(B)G7 1/33		
	HC-SFS102(4)(B)G2 1/45	HG-SR102(4)(B)G7 1/45		
	HC-SFS152(4)(B)G2 1/5	HG-SR152(4)(B)G7 1/5		
	HC-SFS152(4)(B)G2 1/9	HG-SR152(4)(B)G7 1/11		
	HC-SFS152(4)(B)G2 1/20	HG-SR152(4)(B)G7 1/21		
	HC-SFS152(4)(B)G2 1/29	HG-SR152(4)(B)G7 1/33		
	HC-SFS152(4)(B)G2 1/45	HG-SR152(4)(B)G7 1/45		
	HC-SFS202(4)(B)G2 1/5	HG-SR202(4)(B)G7 1/5		
	HC-SFS202(4)(B)G2 1/9	HG-SR202(4)(B)G7 1/11		
	HC-SFS202(4)(B)G2 1/20	HG-SR202(4)(B)G7 1/21		
	HC-SFS202(4)(B)G2 1/29	HG-SR202(4)(B)G7 1/33		
	HC-SFS202(4)(B)G2 1/45	HG-SR202(4)(B)G7 1/45		
	HC-SFS352(4)(B)G2 1/5	HG-SR352(4)(B)G7 1/5		
	HC-SFS352(4)(B)G2 1/9	HG-SR352(4)(B)G7 1/11		
	HC-SFS352(4)(B)G2 1/20	HG-SR352(4)(B)G7 1/21		
	HC-SFS502(4)(B)G2 1/5	HG-SR502(4)(B)G7 1/5		
	HC-SFS502(4)(B)G2 1/9	HG-SR502(4)(B)G7 1/11		
	HC-SFS702(4)(B)G2 1/5	HG-SR702(4)(B)G7 1/5		
Medium capacity, medium inertia HC-SFS series with high precision reducer Flange output type (G5) (4): 400 V specifications (B): With brake	HC-SFS52(4)(B)G5 1/5	HG-SR52(4)(B)G5 1/5	○	• The total length of the motor will be shorter, so confirm that the motor connector does not interfere with the device side.
	HC-SFS52(4)(B)G5 1/11	HG-SR52(4)(B)G5 1/11		
	HC-SFS52(4)(B)G5 1/21	HG-SR52(4)(B)G5 1/21		
	HC-SFS52(4)(B)G5 1/33	HG-SR52(4)(B)G5 1/33		
	HC-SFS52(4)(B)G5 1/45	HG-SR52(4)(B)G5 1/45		
	HC-SFS102(4)(B)G5 1/5	HG-SR102(4)(B)G5 1/5		
	HC-SFS102(4)(B)G5 1/11	HG-SR102(4)(B)G5 1/11		

Note 1. For mounting dimensions, refer to "2.3 Comparison of Mounting Dimensions for Geared Servo Motors".
2. The power supply and encoder connector will be changed. For further details, refer to "2.6 Comparison of Servo Motor Connector Specifications".
For replacement using the existing wiring, use a renewal tool.

Series	Model	Example of replacement model	Compatibility (○: Compatible)	Note
Medium capacity, medium inertia HC-SFS series with high precision reducer Flange output type (G5) (4): 400 V specifications (B): With brake	HC-SFS102(4)(B)G5 1/21	HG-SR102(4)(B)G5 1/21	○	• The total length of the motor will be shorter, so confirm that the motor connector does not interfere with the device side.
	HC-SFS102(4)(B)G5 1/33	HG-SR102(4)(B)G5 1/33		
	HC-SFS102(4)(B)G5 1/45	HG-SR102(4)(B)G5 1/45		
	HC-SFS152(4)(B)G5 1/5	HG-SR152(4)(B)G5 1/5		
	HC-SFS152(4)(B)G5 1/11	HG-SR152(4)(B)G5 1/11		
	HC-SFS152(4)(B)G5 1/21	HG-SR152(4)(B)G5 1/21		
	HC-SFS152(4)(B)G5 1/33	HG-SR152(4)(B)G5 1/33		
	HC-SFS152(4)(B)G5 1/45	HG-SR152(4)(B)G5 1/45		
	HC-SFS202(4)(B)G5 1/5	HG-SR202(4)(B)G5 1/5		
	HC-SFS202(4)(B)G5 1/11	HG-SR202(4)(B)G5 1/11		
	HC-SFS202(4)(B)G5 1/21	HG-SR202(4)(B)G5 1/21		
	HC-SFS202(4)(B)G5 1/33	HG-SR202(4)(B)G5 1/33		
	HC-SFS202(4)(B)G5 1/45	HG-SR202(4)(B)G5 1/45		
	HC-SFS352(4)(B)G5 1/5	HG-SR352(4)(B)G5 1/5		
	HC-SFS352(4)(B)G5 1/11	HG-SR352(4)(B)G5 1/11		
	HC-SFS352(4)(B)G5 1/21	HG-SR352(4)(B)G5 1/21		
	HC-SFS502(4)(B)G5 1/5	HG-SR502(4)(B)G5 1/5		
	HC-SFS502(4)(B)G5 1/11	HG-SR502(4)(B)G5 1/11		
	HC-SFS702(4)(B)G5 1/5	HG-SR702(4)(B)G5 1/5		
Medium capacity, medium inertia HC-SFS series with high precision reducer Shaft output type (G7) (4): 400 V specifications (B): With brake	HC-SFS52(4)(B)G7 1/5	HG-SR52(4)(B)G7 1/5	○	• The total length of the motor will be shorter, so confirm that the motor connector does not interfere with the device side.
	HC-SFS52(4)(B)G7 1/11	HG-SR52(4)(B)G7 1/11		
	HC-SFS52(4)(B)G7 1/21	HG-SR52(4)(B)G7 1/21		
	HC-SFS52(4)(B)G7 1/33	HG-SR52(4)(B)G7 1/33		
	HC-SFS52(4)(B)G7 1/45	HG-SR52(4)(B)G7 1/45		
	HC-SFS102(4)(B)G7 1/5	HG-SR102(4)(B)G7 1/5		
	HC-SFS102(4)(B)G7 1/11	HG-SR102(4)(B)G7 1/11		
	HC-SFS102(4)(B)G7 1/21	HG-SR102(4)(B)G7 1/21		
	HC-SFS102(4)(B)G7 1/33	HG-SR102(4)(B)G7 1/33		
	HC-SFS102(4)(B)G7 1/45	HG-SR102(4)(B)G7 1/45		
	HC-SFS152(4)(B)G7 1/5	HG-SR152(4)(B)G7 1/5		
	HC-SFS152(4)(B)G7 1/11	HG-SR152(4)(B)G7 1/11		
	HC-SFS152(4)(B)G7 1/21	HG-SR152(4)(B)G7 1/21		
	HC-SFS152(4)(B)G7 1/33	HG-SR152(4)(B)G7 1/33		
	HC-SFS152(4)(B)G7 1/45	HG-SR152(4)(B)G7 1/45		
	HC-SFS202(4)(B)G7 1/5	HG-SR202(4)(B)G7 1/5		
	HC-SFS202(4)(B)G7 1/11	HG-SR202(4)(B)G7 1/11		
	HC-SFS202(4)(B)G7 1/21	HG-SR202(4)(B)G7 1/21		
	HC-SFS202(4)(B)G7 1/33	HG-SR202(4)(B)G7 1/33		
	HC-SFS202(4)(B)G7 1/45	HG-SR202(4)(B)G7 1/45		
	HC-SFS352(4)(B)G7 1/5	HG-SR352(4)(B)G7 1/5		
	HC-SFS352(4)(B)G7 1/11	HG-SR352(4)(B)G7 1/11		
	HC-SFS352(4)(B)G7 1/21	HG-SR352(4)(B)G7 1/21		
	HC-SFS502(4)(B)G7 1/5	HG-SR502(4)(B)G7 1/5		
	HC-SFS502(4)(B)G7 1/11	HG-SR502(4)(B)G7 1/11		
	HC-SFS702(4)(B)G7 1/5	HG-SR702(4)(B)G7 1/5		

Note. The power supply and encoder connector will be changed. For further details, refer to "2.6 Comparison of Servo Motor Connector Specifications".
For replacement using the existing wiring, use a renewal tool.

(4) HC-RFS/-LFS/-UFS motor

Series	Model	Example of replacement model	Compatibility (○: Compatible)	Note
Medium capacity, ultra-low inertia HC-RFS series (B): With brake	HC-RFS103(B)	HG-RR103(B)	○	
	HC-RFS153(B)	HG-RR153(B)		
	HC-RFS203(B)	HG-RR203(B)		
	HC-RFS353(B)	HG-RR353(B)		
	HC-RFS503(B)	HG-RR503(B)		
Medium capacity, ultra-low inertia HC-RFS series with high precision reducer (G2) (B): With brake	HC-RFS103(B)G2 1/5 ◇	HG-SR102(B)G7 1/5	(Note 1)	• The HG-RR series does not support the geared model. The geared model is supported with the HG-SR series. • Check the output torque because the reduction ratio of models marked with ◆ is greatly different. • The capacity of the corresponding servo amplifier will be different if a model marked with ◇ is replaced. The corresponding servo amplifier for HG-SR102 is MR-J4-100_, for HG-SR202 is MR-J4-200_, and for HG-SR352 is MR-J4-350_. • The reducer efficiency differs. For further details, refer to "2.4.2 Comparison of actual reduction ratios for geared servo motors".
	HC-RFS103(B)G2 1/9 ◇	HG-SR102(B)G7 1/11		
	HC-RFS103(B)G2 1/20 ◇	HG-SR102(B)G7 1/21		
	HC-RFS103(B)G2 1/29 ◇	HG-SR102(B)G7 1/33		
	HC-RFS103(B)G2 1/45 ◇	HG-SR102(B)G7 1/45		
	HC-RFS153(B)G2 1/5	HG-SR152(B)G7 1/5		
	HC-RFS153(B)G2 1/9	HG-SR152(B)G7 1/11		
	HC-RFS153(B)G2 1/20	HG-SR152(B)G7 1/21		
	HC-RFS153(B)G2 1/29	HG-SR152(B)G7 1/33		
	HC-RFS153(B)G2 1/45	HG-SR152(B)G7 1/45		
	HC-RFS203(B)G2 1/5 ◇	HG-SR202(B)G7 1/5		
	HC-RFS203(B)G2 1/9 ◇	HG-SR202(B)G7 1/11		
	HC-RFS203(B)G2 1/20 ◇	HG-SR202(B)G7 1/21		
	HC-RFS203(B)G2 1/29 ◇	HG-SR202(B)G7 1/33		
	HC-RFS203(B)G2 1/45 ◇	HG-SR202(B)G7 1/45		
	HC-RFS353(B)G2 1/5 ◇	HG-SR352(B)G7 1/5		
	HC-RFS353(B)G2 1/9 ◇	HG-SR352(B)G7 1/11		
	HC-RFS353(B)G2 1/20 ◇	HG-SR352(B)G7 1/21		
	HC-RFS353(B)G2 1/29 ◇	HG-SR352(B)G7 1/21 ◆		
	HC-RFS503(B)G2 1/5	HG-SR502(B)G7 1/5		
	HC-RFS503(B)G2 1/9	HG-SR502(B)G7 1/11		
	HC-RFS503(B)G2 1/20	HG-SR502(B)G7 1/11 ◆		
Medium capacity, ultra-low inertia HC-RFS series with high precision reducer Flange output type (G5) (B): With brake	HC-RFS103(B)G5 1/5 ◇	HG-SR102(B)G5 1/5	(Note 1)	• The HG-RR series does not support the geared model. The geared model is supported with the HG-SR series. • Check the output torque because the reduction ratio of models marked with ◆ is greatly different. • The capacity of the corresponding servo amplifier will be different if a model marked with ◇ is replaced. The corresponding servo amplifier for HG-SR102 is MR-J4-100_, for HG-SR202 is MR-J4-200_, and for HG-SR352 is MR-J4-350_.
	HC-RFS103(B)G5 1/11 ◇	HG-SR102(B)G5 1/11		
	HC-RFS103(B)G5 1/21 ◇	HG-SR102(B)G5 1/21		
	HC-RFS103(B)G5 1/33 ◇	HG-SR102(B)G5 1/33		
	HC-RFS103(B)G5 1/45 ◇	HG-SR102(B)G5 1/45		
	HC-RFS153(B)G5 1/5	HG-SR152(B)G5 1/5		
	HC-RFS153(B)G5 1/11	HG-SR152(B)G5 1/11		
	HC-RFS153(B)G5 1/21	HG-SR152(B)G5 1/21		
	HC-RFS153(B)G5 1/33	HG-SR152(B)G5 1/33		
	HC-RFS153(B)G5 1/45	HG-SR152(B)G5 1/45		
	HC-RFS203(B)G5 1/5 ◇	HG-SR202(B)G5 1/5		
	HC-RFS203(B)G5 1/11 ◇	HG-SR202(B)G5 1/11		
	HC-RFS203(B)G5 1/21 ◇	HG-SR202(B)G5 1/21		
	HC-RFS203(B)G5 1/33 ◇	HG-SR202(B)G5 1/33		
	HC-RFS203(B)G5 1/45 ◇	HG-SR202(B)G5 1/45		
	HC-RFS353(B)G5 1/5 ◇	HG-SR352(B)G5 1/5		
	HC-RFS353(B)G5 1/11 ◇	HG-SR352(B)G5 1/11		
	HC-RFS353(B)G5 1/21 ◇	HG-SR352(B)G5 1/21		
	HC-RFS353(B)G5 1/33 ◇	HG-SR352(B)G5 1/21 ◆		
	HC-RFS503(B)G5 1/5	HG-SR502(B)G5 1/5		
	HC-RFS503(B)G5 1/11	HG-SR502(B)G5 1/11		
	HC-RFS503(B)G5 1/21	HG-SR502(B)G5 1/11 ◆		

Note 1. For mounting dimensions, refer to "2.3 Comparison of Mounting Dimensions for Geared Servo Motors".
2. The power supply and encoder connector will be changed. For further details, refer to "2.6 Comparison of Servo Motor Connector Specifications".
For replacement using the existing wiring, use a renewal tool.

Series	Model	Example of replacement model	Compatibility (○: Compatible)	Note
Medium capacity, ultra-low inertia HC-RFS series with high precision reducer Shaft output type (G7) (B): With brake	HC-RFS103(B)G7 1/5 ◇	HG-SR102(B)G7 1/5	(Note 1)	• The HG-RR series does not support the geared model. The geared model is supported with the HG-SR series. • Check the output torque because the reduction ratio of models marked with ◆ is greatly different. • The capacity of the corresponding servo amplifier will be different if a model marked with ◇ is replaced. The corresponding servo amplifier for HG-SR102 is MR-J4-100_, for HG-SR202 is MR-J4-200_, and for HG-SR352 is MR-J4-350_.
	HC-RFS103(B)G7 1/11 ◇	HG-SR102(B)G7 1/11		
	HC-RFS103(B)G7 1/21 ◇	HG-SR102(B)G7 1/21		
	HC-RFS103(B)G7 1/33 ◇	HG-SR102(B)G7 1/33		
	HC-RFS103(B)G7 1/45 ◇	HG-SR102(B)G7 1/45		
	HC-RFS153(B)G7 1/5	HG-SR152(B)G7 1/5		
	HC-RFS153(B)G7 1/11	HG-SR152(B)G7 1/11		
	HC-RFS153(B)G7 1/21	HG-SR152(B)G7 1/21		
	HC-RFS153(B)G7 1/33	HG-SR152(B)G7 1/33		
	HC-RFS153(B)G7 1/45	HG-SR152(B)G7 1/45		
	HC-RFS203(B)G7 1/5 ◇	HG-SR202(B)G7 1/5		
	HC-RFS203(B)G7 1/11 ◇	HG-SR202(B)G7 1/11		
	HC-RFS203(B)G7 1/21 ◇	HG-SR202(B)G7 1/21		
	HC-RFS203(B)G7 1/33 ◇	HG-SR202(B)G7 1/33		
	HC-RFS203(B)G7 1/45 ◇	HG-SR202(B)G7 1/45		
	HC-RFS353(B)G7 1/5 ◇	HG-SR352(B)G7 1/5		
	HC-RFS353(B)G7 1/11 ◇	HG-SR352(B)G7 1/11		
	HC-RFS353(B)G7 1/21 ◇	HG-SR352(B)G7 1/21		
	HC-RFS353(B)G7 1/33 ◇	HG-SR352(B)G7 1/21 ◆		
	HC-RFS503(B)G7 1/5	HG-SR502(B)G7 1/5		
	HC-RFS503(B)G7 1/11	HG-SR502(B)G7 1/11		
	HC-RFS503(B)G7 1/21	HG-SR502(B)G7 1/11 ◆		
Medium capacity, low inertia HC-LFS series (B): With brake	HC-LFS52(B) ◇	HG-JR73(B)	(Note 1)	• The capacity of the corresponding servo amplifier will be different if a model marked with ◇ is replaced. The correspondence servo amplifier for HG-JR73 is MR-J4-70_, for HG-JR153 is MR-J4-200_, and for HG-JR353 is MR-J4-350_.
	HC-LFS102(B) ◇	HG-JR153(B)		
	HC-LFS152(B) ◇	HG-JR353(B)		
	HC-LFS202(B)			
	HC-LFS302(B)	HG-JR503(B)		
Small capacity, flat type HC-UFS series (B): With brake	HC-UFS13(B)	HG-KR13(B)	(Note 1)	• The HG-KR servo motor does not have an oil seal. Use HG-KR_J when an oil seal is required.
	HC-UFS23(B)	HG-KR23(B)		
	HC-UFS43(B)	HG-KR43(B)		
	HC-UFS73(B)	HG-KR73(B)		
Medium capacity, flat type HC-UFS series (B): With brake	HC-UFS72(B)	HG-UR72(B)	○	
	HC-UFS152(B)	HG-UR152(B)		
	HC-UFS202(B)	HG-UR202(B)		
	HC-UFS352(B)	HG-UR352(B)		
	HC-UFS502(B)	HG-UR502(B)		

Note 1. For mounting dimensions, refer to ailed Comparison of Servo Motor Mounting Dimensions" and "2.3 Comparison of Mounting Dimensions for Geared Servo Motors".

2. The power supply and encoder connector will be changed. For further details, refer to "2.6 Comparison of Servo Motor Connector Specifications".
For replacement using the existing wiring, use a renewal tool.

(5) HA-LFS motor

Series	Model	Example of replacement model	Compatibility (○: Compatible)	Note
Large capacity, low inertia HA-LFS 1000 r/min series (4): 400 V specifications (B): With brake	HA-LFS601(4)(B)	HG-JR601(4)(B)	(Note 1)	
	HA-LFS801(4)(B)	HG-JR801(4)(B)		
	HA-LFS12K1(4)(B)	HG-JR12K1(4)(B)		
	HA-LFS15K1(4)	HG-JR15K1(4)		
	HA-LFS20K1(4)	HG-JR20K1(4)		
	HA-LFS25K1(4)	HG-JR25K1(4)		
	HA-LFS30K1(4)	HG-JR30K1(4)		
	HA-LFS37K1(4)	HG-JR37K1(4)		
	HA-LFS601(4)(B)	HG-JR601(4)R(B)-S_	○	• Only flanges and shaft ends have compatibility in mounting. • Please contact your local sales office regarding the servo motor model and its delivery, since it is developed upon receipt of order.
	HA-LFS801(4)(B)	HG-JR801(4)R(B)-S_		
	HA-LFS12K1(4)(B)	HG-JR12K1(4)R(B)-S_		
	HA-LFS15K1(4)	HG-JR15K1(4)R-S_		
	HA-LFS20K1(4)	HG-JR20K1(4)R-S_		
	HA-LFS25K1(4)	HG-JR25K1(4)R-S_		
	HA-LFS30K1(4)	HG-JR30K1(4)R-S_		
	HA-LFS37K1(4)	HG-JR37K1(4)R-S_		
Large capacity, low inertia HA-LFS 1500 r/min series (4): 400 V specifications (B): With brake	HA-LFS701M(4)(B)	HG-JR701M(4)(B)	(Note 1)	
	HA-LFS11K1M(4)(B)	HG-JR11K1M(4)(B)		
	HA-LFS15K1M(4)(B)	HG-JR15K1M(4)(B)		
	HA-LFS22K1M(4)	HG-JR22K1M(4)		
	HA-LFS30K1M(4)	HG-JR30K1M(4)		
	HA-LFS37K1M(4)	HG-JR37K1M(4)		
	HA-LFS45K1M4	HG-JR45K1M4		
	HA-LFS50K1M4	HG-JR55K1M4		
	HA-LFS701M(4)(B)	HG-JR701M(4)R(B)-S_	○	• Only flanges and shaft ends have compatibility in mounting. • Please contact your local sales office regarding the servo motor model and its delivery, since it is developed upon receipt of order.
	HA-LFS11K1M(4)(B)	HG-JR11K1M(4)R(B)-S_(□250)		
	HA-LFS15K1M(4)(B)	HG-JR15K1M(4)R(B)-S_		
	HA-LFS22K1M(4)	HG-JR22K1M(4)R-S_		
	HA-LFS30K1M(4)	HG-JR30K1M(4)R-S_		
	HA-LFS37K1M(4)	HG-JR37K1M(4)R-S_		
	HA-LFS45K1M4	HG-JR45K1M4R-S_		
	HA-LFS50K1M4	HG-JR55K1M4R-S_		
Large capacity, low inertia HA-LFS series 2000 r/min series (4): 400 V specifications (B): With brake	HA-LFS502	HG-SR502	(Note 1)	• The HG-SR servo motor does not have an oil seal. Use HG-SR_J when an oil seal is required. • The capacity of the corresponding servo amplifier will be different if a model marked with ◇ is replaced.
	HA-LFS702	HG-SR702		
	HA-LFS11K2(4)(B)	HG-JR11K1M(4)(B)		
	HA-LFS15K2(4)(B) ◇			
	HA-LFS22K2(4)(B) ◇	HG-JR15K1M(4)(B)		
	HA-LFS30K2(4) ◇	HG-JR22K1M(4)		
	HA-LFS37K2(4) ◇	HG-JR30K1M(4)		
	HA-LFS45K24 ◇	HG-JR37K1M4		
	HA-LFS55K24 ◇	HG-JR45K1M4		
	HA-LFS502	HG-SR502R-S_	○	• Only flanges and shaft ends have compatibility in mounting. • Please contact your local sales office regarding the servo motor model and its delivery, since it is developed upon receipt of order. • For the replacement from the ◇ model, the capacity of compatible servo amplifier is different.
	HA-LFS702	HG-SR702R-S_		
	HA-LFS11K2(4)(B)	HG-JR11K1M(4)R(B)-S_(□200)		
	HA-LFS15K2(4)(B) ◇	HG-JR11K1M(4)R(B)-S_(□250)		
	HA-LFS22K2(4)(B) ◇	HG-JR15K1M(4)R(B)-S_		
	HA-LFS30K2(4) ◇	HG-JR22K1M(4)R-S_		
	HA-LFS37K2(4) ◇	HG-JR30K1M(4)R-S_		
	HA-LFS45K24 ◇	HG-JR37K1M4R-S_		
	HA-LFS55K24 ◇	HG-JR45K1M4R-S_		

Note 1. Refer to "2.2 Detailed comparison of servo motor mounting dimensions" for mounting dimensions.
2. The power supply and encoder connector will be changed. For further details, refer to "2.6 Comparison of Servo Motor Connector Specifications".
For replacement using the existing wiring, use a renewal tool.
3. For HA-LFS 1000 r/min series of 15 kW or more, HA-LFS 1500 r/min series of 22 kW or more, and HA-LFS 2000 r/min series of 30 kW or more, their substitute models have different thermal wiring from them. A new encoder cable is required when using the substitutes.
4. The HG-JR series does not support foot-mounting.

2. COMPARISON OF SERVO MOTOR SPECIFICATIONS

2.1 Comparison of Servo Motor Mounting Dimensions

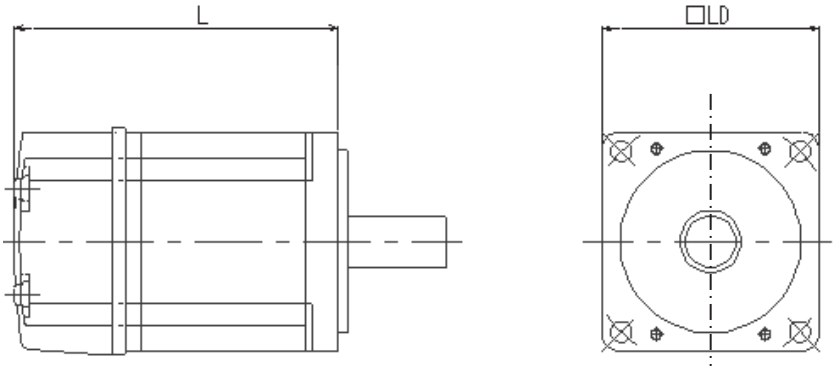

Target product			Replacement product			Note
Model	L	LD	Model	L	LD	
HC-KFS053(B)	81.5(109.5)	40	HG-KR053(B)	66.4(107)	40	(◇ part: Note 2)
HC-MFS053(B)			HG-MR053(B) ◇			
HC-KFS13(B)	96.5(124.5)		HG-KR13(B)	82.4(123)		
HC-MFS13(B)			HG-MR13(B) ◇			
HC-KFS23(B) HC-MFS23(B)	99.5(131.5)	60	HG-KR23(B) HG-MR23(B)	76.6(113.4)	60	(Note 2)
HC-KFS43(B) HC-MFS43(B)	124.5(156.5)		HG-KR43(B) HG-MR43(B)	98.3(135.1)		
HC-KFS73(B) HC-MFS73(B)	142(177.5)	80	HG-KR73(B) HG-MR73(B)	112(152.3)	80	
HC-KFS46	134	60	HG-KR43	98.3	60	
HC-KFS410						
HC-SFS81(B)	170(203)	130	HG-SR81(B)	146.5(181)	130	
HC-SFS121(B)	145(193)	176	HG-SR121(B)	138.5(188)	176	
HC-SFS201(B)	187(235)		HG-SR201(B)	162.5(212)		
HC-SFS301(B)	208(256)		HG-SR301(B)	178.5(228)		
HC-SFS52(B) HC-SFS524(B) HC-SFS53(B)	120(153)	130	HG-SR52(B) HG-SR524(B)	118.5(153)	130	
HC-SFS102(B) HC-SFS1024(B) HC-SFS103(B)	145(178)		HG-SR102(B) HG-SR1024(B)	132.5(167)		
HC-SFS152(B) HC-SFS1524(B) HC-SFS153(B)	170(203)		HG-SR152(B) HG-SR1524(B)	146.5(181)		
HC-SFS202(B) HC-SFS2024(B) HC-SFS203(B)	145(193)	176	HG-SR202(B) HG-SR2024(B)	138.5(188)	176	
HC-SFS352(B) HC-SFS3524(B) HC-SFS353(B)	187(235)		HG-SR352(B) HG-SR3524(B)	162.5(212)		
HC-SFS502(B) HC-SFS5024(B)	208(256)		HG-SR502(B) HG-SR5024(B)	178.5(228)		
HC-SFS702(B) HC-SFS7024(B)	292(340)		HG-SR702(B) HG-SR7024(B)	218.5(268)		
HC-RFS103(B)	147(185)	100	HG-RR103(B)	145.5(183)	100	
HC-RFS153(B)	172(210)		HG-RR153(B)	170.5(208)		
HC-RFS203(B)	197(235)		HG-RR203(B)	195.5(233)		
HC-RFS353(B)	217(254)	130	HG-RR353(B)	215.5(252)	130	
HC-RFS503(B)	274(311)		HG-RR503(B)	272.5(309)		

Note 1. As for the dimensions not listed here, refer to the catalog or Instruction Manual. ( ): With brake [Unit: mm]
2. Some mounting dimensions have differences. Refer to "2.2 Detailed Comparison of Servo Motor Mounting Dimensions" for detailed dimensions.

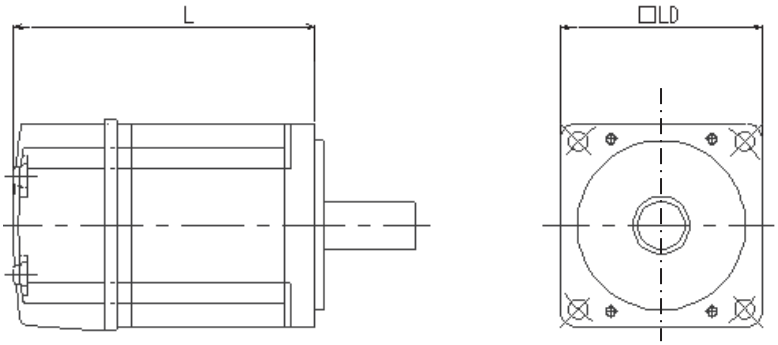

Target product			Replacement product			Note
Model	L	LD	Model	L	LD	
HC-LFS52(B)	145.5(178.5)	130	HG-JR73(B)	145.5(191)	90	(Note 2)
HC-LFS102(B)	165.5(198.5)		HG-JR153(B)	199.5(245)		
HC-LFS152(B)	193(226)		HG-JR353(B)	213(251.5)	130	
HC-LFS202(B)	200(248)	176	HG-JR353(B)	213(251.5)		
HC-LFS302(B)	250(298)		HG-JR503(B)	267(305.5)		
HC-UFS13(B)	70(100)	60	HG-KR13(B)	82.4(123)	40	(Note 2)
HC-UFS23(B)	77(111)	80	HG-KR23(B)	76.6(113.4)	60	
HC-UFS43(B)	92(126)		HG-KR43(B)	98.3(135.1)		
HC-UFS73(B)	85(111)	123	HG-KR73(B)	112(152.3)	80	
HC-UFS72(B)	110.5(144)	176	HG-UR72(B)	109(142.5)	176	
HC-UFS152(B)	120(153.5)		HG-UR152(B)	118.5(152)		
HC-UFS202(B)	118(161)	220	HG-UR202(B)	116.5(159.5)	220	
HC-UFS352(B)	142(185)		HG-UR352(B)	140.5(183.5)		
HC-UFS502(B)	166(209)		HG-UR502(B)	164.5(207.5)		
HA-LFS601(B) HA-LFS6014(B)	480(550)	200	HG-JR601(B) HG-JR6014(B)	299.5(372)	220	(Note 2)
			HG-JR601R(B)-S_ HG-JR6014R(B)-S_	399(472)	200	
HA-LFS801(B) HA-LFS8014(B)	495(610)	250	HG-JR801(B) HG-JR8014(B)	339.5(412)	220	(Note 2)
			HG-JR801R(B)-S_ HG-JR8014R(B)-S_	354(427)	250	
HA-LFS12K1(B) HA-LFS12K14(B)	555(670)		HG-JR12K1(B) HG-JR12K14(B)	439.5(512)	220	(Note 2)
			HG-JR12K1R(B)-S_ HG-JR12K14R(B)-S_	454(527)	250	
HA-LFS15K1 HA-LFS15K14	605	280	HG-JR15K1 HG-JR15K14	476	250	(Note 2)
			HG-JR15K1R-S_ HG-JR15K14R-S_	493	280	
HA-LFS20K1 HA-LFS20K14	650		HG-JR20K1 HG-JR20K14	538	250	(Note 2)
			HG-JR20K1R-S_ HG-JR20K14R-S_	555	280	
HA-LFS25K1 HA-LFS25K14	640	350	HG-JR25K1 HG-JR25K14	600	250	(Note 2)
			HG-JR25K1R-S_ HG-JR25K14R-S_	617	350	
HA-LFS30K1 HA-LFS30K14	685		HG-JR30K1 HG-JR30K14	600	280	(Note 2)
			HG-JR30K1R-S_ HG-JR30K14R-S_	610	350	
HA-LFS37K1 HA-LFS37K14	785		HG-JR37K1 HG-JR37K14	664	280	(Note 2)
			HG-JR37K1R-S_ HG-JR37K14R-S_	674	350	

Note 1. As for the dimensions not listed here, refer to the catalog or Instruction Manual. ( ): With brake [Unit: mm]
2. Without mounting compatibility. Refer to "2.2 Detailed Comparison of Servo Motor Mounting Dimensions" for detailed dimensions.

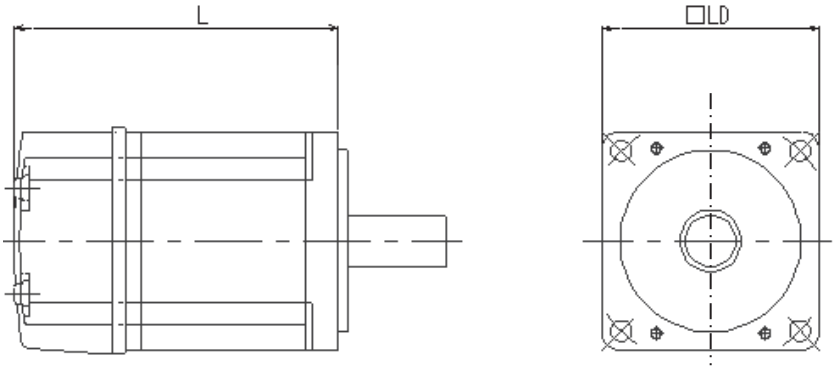

Target product			Replacement product			Note
Model	L	LD	Model	L	LD	
HA-LFS701M(B) HA-LFS701M4(B)	480(550)	200	HG-JR701M(B) HG-JR701M4(B)	299.5(372)	220	(Note 2)
			HG-JR701MR(B)-S_ HG-JR701M4R(B)-S_	399(472)	200	
HA-LFS11K1M(B) HA-LFS11K1M4(B)	495(610)	250	HG-JR11K1M(B) HG-JR11K1M4(B)	339.5(412)	220	(Note 2)
			HG-JR11K1MR(B)-S_(□250) HG-JR11K1M4R(B)-S_(□250)	354(427)	250	
HA-LFS15K1M(B) HA-LFS15K1M4(B)	555(670)		HG-JR15K1M(B) HG-JR15K1M4(B)	439.5(512)	220	(Note 2)
			HG-JR15K1MR(B)-S_ HG-JR15K1M4R(B)-S_	454(526.5)	250	
HA-LFS22K1M HA-LFS22K1M4	605	280	HG-JR22K1M HG-JR22K1M4	476	250	(Note 2)
			HG-JR22K1MR-S_ HG-JR22K1M4R-S_	493	280	
HA-LFS30K1M	660		HG-JR30K1M	538	250	(Note 2)
			HG-JR30K1MR-S_	555	280	
HA-LFS30K1M4	650		HG-JR30K1M4	538	250	(Note 2)
			HG-JR30K1M4R-S_	555	280	
HA-LFS37K1M HA-LFS37K1M4	640	350	HG-JR37K1M HG-JR37K1M4	600	250	(Note 2)
			HG-JR37K1MR-S_ HG-JR37K1M4R-S_	617	350	
HA-LFS45K1M4	685		HG-JR45K1M4	600	280	(Note 2)
			HG-JR45K1M4R-S_	610	350	
HA-LFS50K1M4	785		HG-JR55K1M4	664	280	(Note 2)
			HG-JR55K1M4R-S_	674	350	

Note 1. As for the dimensions not listed here, refer to the catalog or Instruction Manual. ( ): With brake [Unit: mm]
2. Without mounting compatibility. Refer to "2.2 Detailed Comparison of Servo Motor Mounting Dimensions" for detailed dimensions.

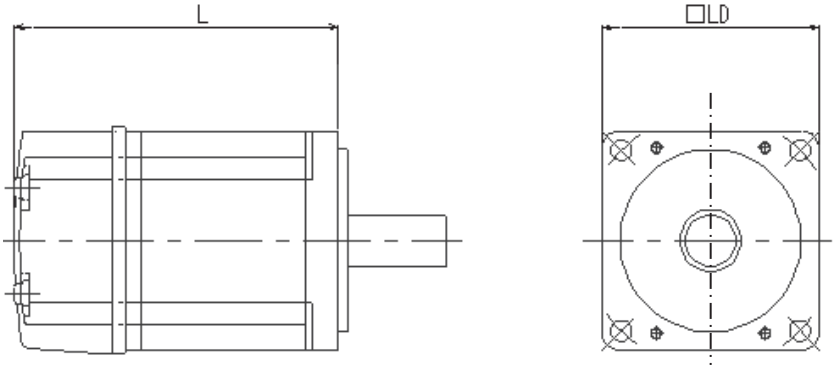

Target product			Replacement product			Note
Model	L	LD	Model	L	LD	
HA-LFS502	300	200	HG-SR502	178.5	176	(Note 2)
			HG-SR502R-S_	207	200	
HA-LFS702	342		HG-SR702	218.5	176	(Note 2)
			HG-SR702R-S_	247	200	
HA-LFS11K2(B) HA-LFS11K24(B)	480(550)		HG-JR11K1M(B) HG-JR11K1M4(B)	339.5(412)	220	(Note 2)
			HG-JR11K1MR(B)-S_(□200) HG-JR11K1M4R(B)-S_(□200)	439(512)	200	
HA-LFS15K2(B) HA-LFS15K24(B)	495(610)	250	HG-JR11K1M(B) HG-JR11K1M4(B)	339.5(412)	220	(Note 2)
			HG-JR11K1MR(B)-S_(□250) HG-JR11K1M4R(B)-S_(□250)	354(427)	250	
HA-LFS22K2(B) HA-LFS22K24(B)	555(670)		HG-JR15K1M(B) HG-JR15K1M4(B)	439.5(512)	220	(Note 2)
			HG-JR15K1MR(B)-S_ HG-JR15K1M4R(B)-S_	454(526.5)	250	
HA-LFS30K2	615	280	HG-JR22K1M	476	250	(Note 2)
			HG-JR22K1MR-S_	493	280	
HA-LFS30K24	605		HG-JR22K1M4	476	250	(Note 2)
			HG-JR22K1M4R-S_	493	280	
HA-LFS37K2	660		HG-JR30K1M	538	250	(Note 2)
			HG-JR30K1MR-S_	555	280	
HA-LFS37K24	650		HG-JR30K1M4	538	250	(Note 2)
			HG-JR30K1M4R-S_	555	280	
HA-LFS45K24	640	350	HG-JR37K1M4	600	250	(Note 2)
			HG-JR37K1M4R-S_	617	350	
HA-LFS55K24	685		HG-JR45K1M4	600	280	(Note 2)
			HG-JR45K1M4R-S_	610	350	

Note 1. As for the dimensions not listed here, refer to the catalog or Instruction Manual. ( ): With brake [Unit: mm]
2. Without mounting compatibility. Refer to "2.2 Detailed Comparison of Servo Motor Mounting Dimensions" for detailed dimensions.

2.2 Detailed Comparison of Servo Motor Mounting Dimensions

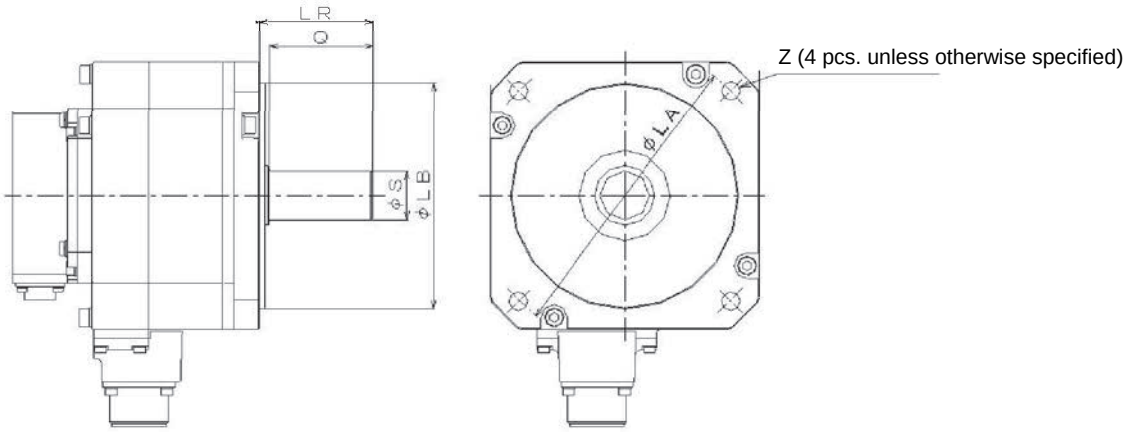

Target product							Replacement product						
Model	LA	LB	LR	Q	S	Z	Model	LA	LB	LR	Q	S	Z
HC-MFS053(B)	46	30	25	22.5	8	2-4.5	HG-MR053(B)	46	30	25	21.5	8	2-4.5
HC-MFS13(B)	46	30	25	22.5	8	2-4.5	HG-MR13(B)	46	30	25	21.5	8	2-4.5
HC-KFS23(B) HC-MFS23(B)	70	50	30	27	14	5.8	HG-KR23(B) HG-MR23(B)	70	50	30	26	14	5.8
HC-KFS43(B) HC-MFS43(B)	70	50	30	27	14	5.8	HG-KR43(B) HG-MR43(B)	70	50	30	26	14	5.8
HC-KFS73(B) HC-MFS73(B)	90	70	40	37	19	6.6	HG-KR73(B) HG-MR73(B)	90	70	40	36	19	6.6
HC-KFS46	70	50	30	27	14	5.8	HG-KR43	70	50	30	26	14	5.8
HC-KFS410	70	50	30	27	14	5.8							
HC-LFS52(B)	145	110	55	50	24	9	HG-JR73(B)	100	80	40	30	16	6.6
HC-LFS102(B)	145	110	55	50	24	9	HG-JR153(B)	100	80	40	30	16	6.6
HC-LFS152(B)	145	110	55	50	24	9	HG-JR353(B)	145	110	55	50	28	9
HC-LFS202(B)	200	114.3	79	75	35	13.5	HG-JR353(B)	145	110	55	50	28	9
HC-LFS302(B)	200	114.3	79	75	35	13.5	HG-JR503(B)	145	110	55	50	28	9
HC-UFS13(B)	70	50	25	19	8	5.8	HG-KR13(B)	46	30	25	21.5	8	2-4.5
HC-UFS23(B)	90	70	30	23.5	14	6.6	HG-KR23(B)	70	50	30	26	14	5.8
HC-UFS43(B)	90	70	30	23.5	14	6.6	HG-KR43(B)	70	50	30	26	14	5.8
HC-UFS73(B)	145	110	40	32.5	19	9	HG-KR73(B)	90	70	40	36	19	6.6
HA-LFS601(B) HA-LFS6014(B)	215	180	85	80	42	14.5	HG-JR601(B) HG-JR6014(B)	235	200	85	79	42	13.5
HA-LFS801(B) HA-LFS8014(B)	265	230	110	100	55	14.5	HG-JR801(B) HG-JR8014(B)	235	200	116	110	55	13.5
HA-LFS12K1(B) HA-LFS12K14(B)	265	230	110	100	55	14.5	HG-JR12K1(B) HG-JR12K14(B)	235	200	116	110	55	13.5
HA-LFS15K1 HA-LFS15K14	300	250	140	140	60	19	HG-JR15K1 HG-JR15K14	265	230	140	130	65	24
HA-LFS20K1 HA-LFS20K14	300	250	140	140	60	19	HG-JR20K1 HG-JR20K14	265	230	140	130	65	24
HA-LFS25K1 HA-LFS25K14	350	300	140	140	65	19	HG-JR25K1 HG-JR25K14	265	230	140	130	65	24
HA-LFS30K1 HA-LFS30K14	350	300	140	140	65	19	HG-JR30K1 HG-JR30K14	300	250	140	140	80	24
HA-LFS37K1 HA-LFS37K14	350	300	170	170	80	19	HG-JR37K1 HG-JR37K14	300	250	140	140	80	24

Note 1. As for the dimensions not listed here, refer to the catalog or Instruction Manual. ( ): With brake [Unit: mm]
2. Dimensions with differences are shown with shading.
3. The HG-JR series does not support foot-mounting.

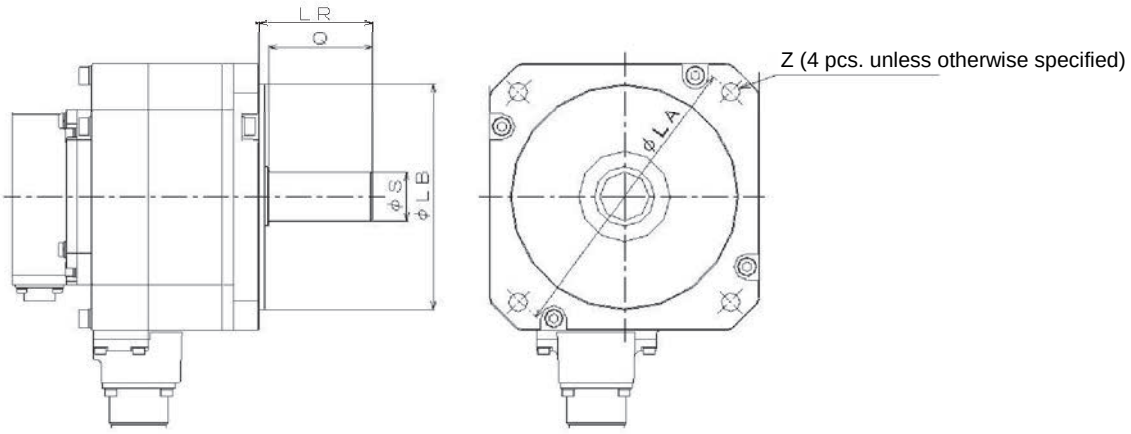

Target product							Replacement product						
Model	LA	LB	LR	Q	S	Z	Model	LA	LB	LR	Q	S	Z
HA-LFS701M(B) HA-LFS701M4(B)	215	180	85	80	42	14.5	HG-JR701M(B) HG-JR701M4(B)	235	200	85	79	42	13.5
HA-LFS11K1M(B) HA-LFS11K1M4(B)	265	230	110	100	55	14.5	HG-JR11K1M(B) HG-JR11K1M4(B)	235	200	116	110	55	13.5
HA-LFS15K1M(B) HA-LFS15K1M4(B)	265	230	110	100	55	14.5	HG-JR15K1M(B) HG-JR15K1M4(B)	235	200	116	110	55	13.5
HA-LFS22K1M HA-LFS22K1M4	300	250	140	140	60	19	HG-JR22K1M HG-JR22K1M4	265	230	140	130	65	24
HA-LFS30K1M HA-LFS30K1M4	300	250	140	140	60	19	HG-JR30K1M HG-JR30K1M4	265	230	140	130	65	24
HA-LFS37K1M HA-LFS37K1M4	350	300	140	140	65	19	HG-JR37K1M HG-JR37K1M4	265	230	140	130	65	24
HA-LFS45K1M4	350	300	140	140	65	19	HG-JR45K1M4	300	250	140	140	80	24
HA-LFS50K1M4	350	300	170	170	80	19	HG-JR55K1M4	300	250	140	140	80	24
HA-LFS502	215	180	85	80	42	14.5	HG-SR502	200	114.3	79	75	35	13.5
HA-LFS702	215	180	85	80	42	14.5	HG-SR702	200	114.3	79	75	35	13.5
HA-LFS11K2(B) HA-LFS11K24(B)	215	180	85	80	42	14.5	HG-JR11K1M(B) HG-JR11K1M4(B)	235	200	116	110	55	13.5
HA-LFS15K2(B) HA-LFS15K24(B)	265	230	110	100	55	14.5	HG-JR11K1M(B) HG-JR11K1M4(B)	235	200	116	110	55	13.5
HA-LFS22K2(B) HA-LFS22K24(B)	265	230	110	100	55	14.5	HG-JR15K1M(B) HG-JR15K1M4(B)	235	200	116	110	55	13.5
HA-LFS30K2 HA-LFS30K24	300	250	140	140	60	19	HG-JR22K1M HG-JR22K1M4	265	230	140	130	65	24
HA-LFS37K2 HA-LFS37K24	300	250	140	140	60	19	HG-JR30K1M HG-JR30K1M4	265	230	140	130	65	24
HA-LFS45K24	350	300	140	140	65	19	HG-JR37K1M4	265	230	140	130	65	24
HA-LFS55K24	350	300	140	140	65	19	HG-JR45K1M4	300	250	140	140	80	24

Note 1. As for the dimensions not listed here, refer to the catalog or Instruction Manual. ( ): With brake [Unit: mm]
2. Dimensions with differences are shown with shading.
3. The HG-JR series does not support foot-mounting.

2.3 Comparison of Mounting Dimensions for Geared Servo Motors

For high precision applications: HC-KFS, HC-MFS_G2 to HG-KR_G7

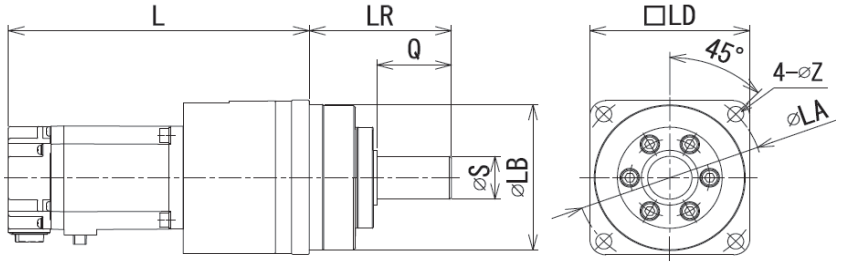

Output (W)	HC-KFS and HC-MFS series (G2)									HG-KR series (G7)								
	Reduction ratio	L	LR	Q	S	LA	LB	LD	Z	Reduction ratio	L	LR	Q	S	LA	LB	LD	Z
50	1/5	130 (158)	55	25	16	80	65	70	6.6	1/5	105.9 (146.5)	42	20	10	46	40	40	3.4
											130.4 (171)	58	28	16	70	56	60	5.5
	1/9	146 (174)	55	25	16	80	65	70	6.6	1/9	105.9 (146.5)	42	20	10	46	40	40	3.4
	1/20	146 (174)	55	25	16	80	65	70	6.6	1/21	130.4 (171)	58	28	16	70	56	60	5.5
	1/29	146 (174)	55	25	16	80	65	70	6.6	1/33	130.4 (171)	58	28	16	70	56	60	5.5
100	1/5	145 (173)	55	25	16	80	65	70	6.6	1/5	121.9 (162.5)	42	20	10	46	40	40	3.4
											146.4 (187)	58	28	16	70	56	60	5.5
	1/9	161 (189)	55	25	16	80	65	70	6.6	1/11	146.4 (187)	58	28	16	70	56	60	5.5
	1/20	167 (195)	75	35	20	100	80	85	6.6	1/21	146.4 (187)	58	28	16	70	56	60	5.5
	1/29	167 (195)	75	35	20	100	80	85	6.6	1/33	148.9 (189.5)	80	42	25	105	85	90	9
200	1/5	157 (189)	55	25	16	80	65	70	6.6	1/5	140.6 (177.4)	58	28	16	70	56	60	5.5
	1/9	175 (207)	75	35	20	100	80	85	6.6	1/11	140.6 (177.4)	58	28	16	70	56	60	5.5
	1/20	180 (212)	85	40	25	115	95	100	9	1/21	147.6 (184.4)	80	42	25	105	85	90	9
	1/29	180 (212)	85	40	25	115	95	100	9	1/33	147.6 (184.4)	80	42	25	105	85	90	9
400	1/5	184 (216)	75	35	20	100	80	85	6.6	1/5	162.3 (199.1)	58	28	16	70	56	60	5.5
	1/9	205 (237)	85	40	25	115	95	100	9	1/11	169.3 (206.1)	80	42	25	105	85	90	9
	1/20	211 (243)	100	50	32	135	110	115	11	1/21	169.3 (206.1)	80	42	25	105	85	90	9
	1/29	211 (243)	100	50	32	135	110	115	11	1/33	181.3 (218.1)	133	82	40	135	115	120	11
750	1/5	212 (247.5)	85	40	25	115	95	100	9	1/5	190 (230.3)	80	42	25	105	85	90	9
	1/9	240 (275.5)	100	50	32	135	110	115	11	1/11	190 (230.3)	80	42	25	105	85	90	9
	1/20	248 (283.5)	115	60	40	150	125	130	14	1/21	200 (240.3)	133	82	40	135	115	120	11
	1/29	248 (283.5)	115	60	40	150	125	130	14	1/33	200 (240.3)	133	82	40	135	115	120	11

Note. As for the dimensions not listed here, refer to the catalog or Instruction Manual. ( ): With brake [Unit: mm]

For high precision applications: HC-SFS_G2 to HG-SR_G7 0.5 kW to 1.5 kW

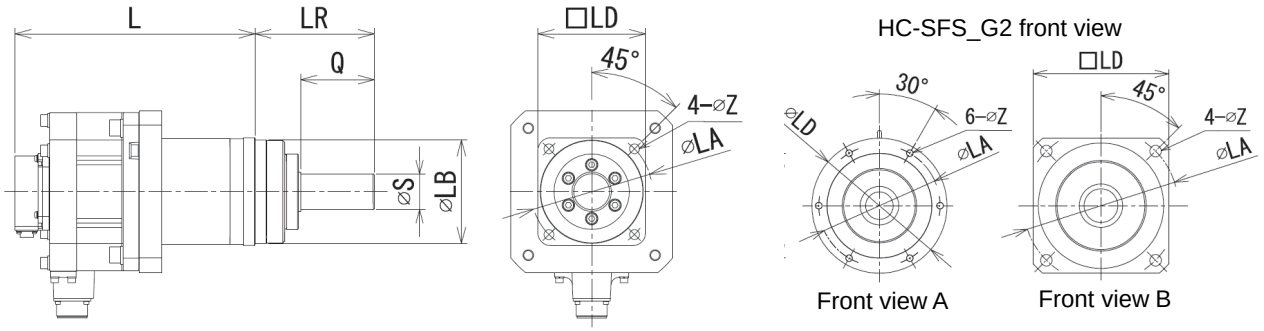

Output (kW)	HC-SFS series (G2)										HG-SR series (G7)								
	Reduction ratio	L	LR	Q	S	LA	LB	LD	Z	Front view	Reduction ratio	L	LR	Q	S	LA	LB	LD	Z
0.5	1/5	276 (309)	100	55	35	160	130	140	12	B	1/5	213.5 (248)	80	42	25	105	85	90	9
	1/9	288 (321)	100	55	35	160	130	140	12	B	1/11	213.5 (248)	80	42	25	105	85	90	9
	1/20	309 (342)	100	55	35	160	130	140	12	B	1/21	225.5 (260)	133	82	40	135	115	120	11
	1/29	337 (370)	140	75	50	220	190	245	12	A	1/33	225.5 (260)	133	82	40	135	115	120	11
	1/45	343 (376)	140	75	50	220	190	245	12	A	1/45	225.5 (260)	133	82	40	135	115	120	11
1.0	1/5	301 (334)	100	55	35	160	130	140	12	B	1/5	227.5 (262)	80	42	25	105	85	90	9
	1/9	313 (346)	100	55	35	160	130	140	12	B	1/11	239.5 (274)	133	82	40	135	115	120	11
	1/20	362 (395)	140	75	50	220	190	245	12	A	1/21	239.5 (274)	133	82	40	135	115	120	11
	1/29	362 (395)	140	75	50	220	190	245	12	A	1/33	255.5 (290)	156	82	50	190	165	170	14
	1/45	389 (422)	160	90	60	280	240	310	14	A	1/45	255.5 (290)	156	82	50	190	165	170	14
1.5	1/5	326 (359)	100	55	35	160	130	140	12	B	1/5	241.5 (276)	80	42	25	105	85	90	9
	1/9	379 (412)	140	75	50	220	190	245	12	A	1/11	253.5 (288)	133	82	40	135	115	120	11
	1/20	387 (420)	140	75	50	220	190	245	12	A	1/21	269.5 (304)	156	82	50	190	165	170	14
	1/29	411 (444)	160	90	60	280	240	310	14	A	1/33	269.5 (304)	156	82	50	190	165	170	14
	1/45	414 (447)	160	90	60	280	240	310	14	A	1/45	269.5 (304)	156	82	50	190	165	170	14

Note. As for the dimensions not listed here, refer to the catalog or Instruction Manual. ( ): With brake [Unit: mm]

For high precision applications: HC-SFS_G2 to HG-SR_G7 2.0 kW to 7.0 kW

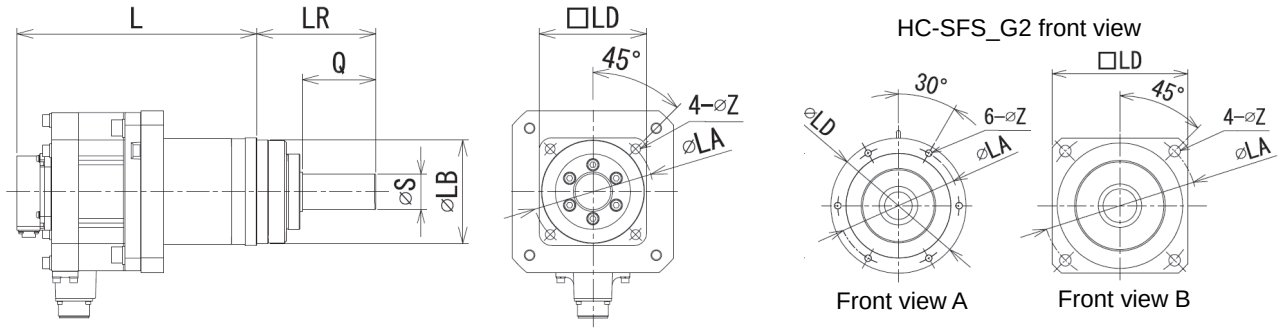

Output (kW)	HC-SFS series (G2)										HG-SR series (G7)								
	Reduction ratio	L	LR	Q	S	LA	LB	LD	Z	Front view	Reduction ratio	L	LR	Q	S	LA	LB	LD	Z
2.0	1/5	348 (396)	140	75	50	220	190	245	12	A	1/5	267.5 (317)	133	82	40	135	115	120	11
	1/9	375 (423)	140	75	50	220	190	245	12	A	1/11	267.5 (317)	133	82	40	135	115	120	11
	1/20	407 (455)	160	90	60	280	240	310	14	A	1/21	287.5 (337)	156	82	50	190	165	170	14
	1/29	407 (455)	160	90	60	280	240	310	14	A	1/33	287.5 (337)	156	82	50	190	165	170	14
	1/45	410 (458)	160	90	60	280	240	310	14	A	1/45	287.5 (337)	156	82	50	190	165	170	14
3.5	1/5	410 (458)	160	90	60	280	240	310	14	A	1/5	291.5 (341)	133	82	40	135	115	120	11
	1/9	442 (490)	160	90	60	280	240	310	14	A	1/11	311.5 (361)	156	82	50	190	165	170	14
	1/20	449 (497)	160	90	60	280	240	310	14	A	1/21	311.5 (361)	156	82	50	190	165	170	14
5.0	1/5	431 (479)	160	90	60	280	240	310	14	A	1/5	327.5 (377)	156	82	50	190	165	170	14
	1/9	463 (511)	160	90	60	280	240	310	14	A	1/11	327.5 (377)	156	82	50	190	165	170	14
7.0	1/5	515 (563)	160	90	60	280	240	310	14	A	1/5	367.5 (417)	156	82	50	190	165	170	14

Note. As for the dimensions not listed here, refer to the catalog or Instruction Manual. ( ): With brake [Unit: mm]

For high precision applications: HC-RFS_G2 to HG-SR_G7

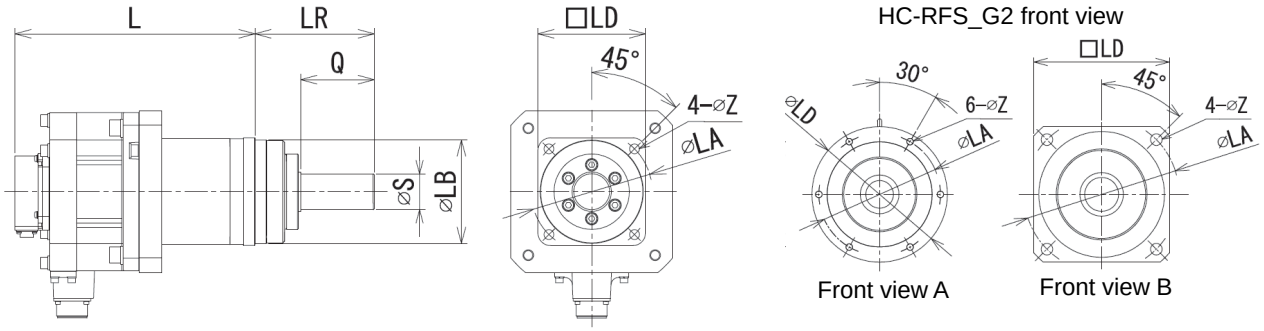

Output (kW)	HC-RFS series (G2)										HG-SR series (G7)								
	Reduction ratio	L	LR	Q	S	LA	LB	LD	Z	Front view	Reduction ratio	L	LR	Q	S	LA	LB	LD	Z
1.0	1/5	301 (339)	100	55	35	160	130	140	12	B	1/5	227.5 (262)	80	42	25	105	85	90	9
	1/9	313 (351)	100	55	35	160	130	140	12	B	1/11	239.5 (274)	133	82	40	135	115	120	11
	1/20	354 (392)	140	75	50	220	190	245	12	A	1/21	239.5 (274)	133	82	40	135	115	120	11
	1/29	354 (392)	140	75	50	220	190	245	12	A	1/33	255.5 (290)	156	82	50	190	165	170	14
	1/45	364 (402)	140	75	50	220	190	245	12	A	1/45	255.5 (290)	156	82	50	190	165	170	14
1.5	1/5	326 (364)	100	55	35	160	130	140	12	B	1/5	241.5 (276)	80	42	25	105	85	90	9
	1/9	375 (413)	140	75	50	220	190	245	12	A	1/11	253.5 (288)	133	82	40	135	115	120	11
	1/20	379 (417)	140	75	50	220	190	245	12	A	1/21	269.5 (304)	156	82	50	190	165	170	14
	1/29	379 (417)	140	75	50	220	190	245	12	A	1/33	269.5 (304)	156	82	50	190	165	170	14
	1/45	410 (448)	160	90	60	280	240	310	14	A	1/45	269.5 (304)	156	82	50	190	165	170	14
2.0	1/5	351 (389)	100	55	35	160	130	140	12	B	1/5	267.5 (317)	133	82	40	135	115	120	11
	1/9	400 (438)	140	75	50	220	190	245	12	A	1/11	267.5 (317)	133	82	40	135	115	120	11
	1/20	404 (442)	140	75	50	220	190	245	12	A	1/21	287.5 (337)	156	82	50	190	165	170	14
	1/29	425 (463)	160	90	60	280	240	310	14	A	1/33	287.5 (337)	156	82	50	190	165	170	14
	1/45	435 (473)	160	90	60	280	240	310	14	A	1/45	287.5 (337)	156	82	50	190	165	170	14
3.5	1/5	418 (455)	140	75	50	220	190	245	12	A	1/5	291.5 (341)	133	82	40	135	115	120	11
	1/9	470 (507)	160	90	60	280	240	310	14	A	1/11	311.5 (361)	156	82	50	190	165	170	14
	1/20	470 (507)	160	90	60	280	240	310	14	A	1/21	311.5 (361)	156	82	50	190	165	170	14
	1/29	470 (507)	160	90	60	280	240	310	14	A	1/21	311.5 (361)	156	82	50	190	165	170	14
5.0	1/5	495 (532)	160	90	60	280	240	310	14	A	1/5	327.5 (377)	156	82	50	190	165	170	14
	1/9	527 (564)	160	90	60	280	240	310	14	A	1/11	327.5 (377)	156	82	50	190	165	170	14
	1/20	527 (564)	160	90	60	280	240	310	14	A	1/11	327.5 (377)	156	82	50	190	165	170	14

Note. As for the dimensions not listed here, refer to the catalog or Instruction Manual. ( ): With brake [Unit: mm]

For high precision applications: HC-RFS_G5 to HG-SR_G5

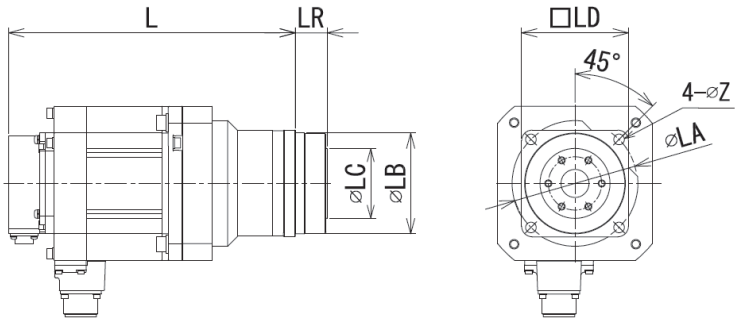

Output (kW)	HC-RFS series (G5)								HG-SR series (G5)							
	Reduction ratio	L	LR	LA	LB	LC	LD	Z	Reduction ratio	L	LR	LA	LB	LC	LD	Z
1.0	1/5	229 (267)	27	105	85	59	90	9	1/5	227.5 (262)	27	105	85	59	90	9
	1/11	229 (267)	27	105	85	59	90	9	1/11	239.5 (274)	35	135	115	84	120	11
	1/21	257 (295)	35	135	115	84	120	11	1/21	239.5 (274)	35	135	115	84	120	11
	1/33	257 (295)	35	135	115	84	120	11	1/33	255.5 (290)	53	190	165	122	170	14
	1/45	270 (308)	53	190	165	122	170	14	1/45	255.5 (290)	53	190	165	122	170	14
1.5	1/5	254 (292)	27	105	85	59	90	9	1/5	241.5 (276)	27	105	85	59	90	9
	1/11	282 (320)	35	135	115	84	120	11	1/11	253.5 (288)	35	135	115	84	120	11
	1/21	282 (320)	35	135	115	84	120	11	1/21	269.5 (304)	53	190	165	122	170	14
	1/33	295 (333)	53	190	165	122	170	14	1/33	269.5 (304)	53	190	165	122	170	14
	1/45	295 (333)	53	190	165	122	170	14	1/45	269.5 (304)	53	190	165	122	170	14
2.0	1/5	279 (317)	27	105	85	59	90	9	1/5	267.5 (317)	35	135	115	84	120	11
	1/11	307 (345)	35	135	115	84	120	11	1/11	267.5 (317)	35	135	115	84	120	11
	1/21	320 (358)	53	190	165	122	170	14	1/21	287.5 (337)	53	190	165	122	170	14
	1/33	320 (358)	53	190	165	122	170	14	1/33	287.5 (337)	53	190	165	122	170	14
	1/45	320 (358)	53	190	165	122	170	14	1/45	287.5 (337)	53	190	165	122	170	14
3.5	1/5	346 (383)	35	135	115	84	120	11	1/5	291.5 (341)	35	135	115	84	120	11
	1/11	346 (383)	35	135	115	84	120	11	1/11	311.5 (361)	53	190	165	122	170	14
	1/21	366 (403)	53	190	165	122	170	14	1/21	311.5 (361)	53	190	165	122	170	14
	1/33	366 (403)	53	190	165	122	170	14	1/21	311.5 (361)	53	190	165	122	170	14
5.0	1/5	403 (440)	35	135	115	84	120	11	1/5	327.5 (377)	53	190	165	122	170	14
	1/11	423 (460)	53	190	165	122	170	14	1/11	327.5 (377)	53	190	165	122	170	14
	1/21	423 (460)	53	190	165	122	170	14	1/11	327.5 (377)	53	190	165	122	170	14

Note. As for the dimensions not listed here, refer to the catalog or Instruction Manual. ( ): With brake [Unit: mm]

For high precision applications: HC-RFS_G7 to HG-SR_G7

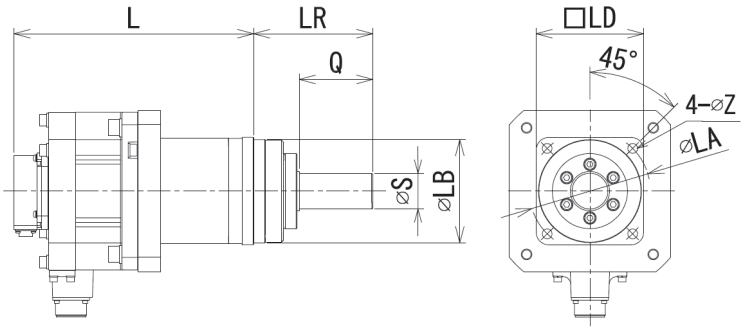

Output (kW)	HC-RFS series (G7)									HG-SR series (G7)								
	Reduction ratio	L	LR	Q	S	LA	LB	LD	Z	Reduction ratio	L	LR	Q	S	LA	LB	LD	Z
1.0	1/5	229 (267)	80	42	25	105	85	90	9	1/5	227.5 (262)	80	42	25	105	85	90	9
	1/11	229 (267)	80	42	25	105	85	90	9	1/11	239.5 (274)	133	82	40	135	115	120	11
	1/21	257 (295)	133	82	40	135	115	120	11	1/21	239.5 (274)	133	82	40	135	115	120	11
	1/33	257 (295)	133	82	40	135	115	120	11	1/33	255.5 (290)	156	82	50	190	165	170	14
	1/45	270 (308)	156	82	50	190	165	170	14	1/45	255.5 (290)	156	82	50	190	165	170	14
1.5	1/5	254 (292)	80	42	25	105	85	90	9	1/5	241.5 (276)	80	42	25	105	85	90	9
	1/11	282 (320)	133	82	40	135	115	120	11	1/11	253.5 (288)	133	82	40	135	115	120	11
	1/21	282 (320)	133	82	40	135	115	120	11	1/21	269.5 (304)	156	82	50	190	165	170	14
	1/33	295 (333)	156	82	50	190	165	170	14	1/33	269.5 (304)	156	82	50	190	165	170	14
	1/45	295 (333)	156	82	50	190	165	170	14	1/45	269.5 (304)	156	82	50	190	165	170	14
2.0	1/5	279 (317)	80	42	25	105	85	90	9	1/5	267.5 (317)	133	82	40	135	115	120	11
	1/11	307 (345)	133	82	40	135	115	120	11	1/11	267.5 (317)	133	82	40	135	115	120	11
	1/21	320 (358)	156	82	50	190	165	170	14	1/21	287.5 (337)	156	82	50	190	165	170	14
	1/33	320 (358)	156	82	50	190	165	170	14	1/33	287.5 (337)	156	82	50	190	165	170	14
	1/45	320 (358)	156	82	50	190	165	170	14	1/45	287.5 (337)	156	82	50	190	165	170	14
3.5	1/5	346 (383)	133	82	40	135	115	120	11	1/5	291.5 (341)	133	82	40	135	115	120	11
	1/11	346 (383)	133	82	40	135	115	120	11	1/11	311.5 (361)	156	82	50	190	165	170	14
	1/21	366 (403)	156	82	50	190	165	170	14	1/21	311.5 (361)	156	82	50	190	165	170	14
	1/33	366 (403)	156	82	50	190	165	170	14	1/21	311.5 (361)	156	82	50	190	165	170	14
5.0	1/5	403 (440)	133	82	40	135	115	120	11	1/5	327.5 (377)	156	82	50	190	165	170	14
	1/11	423 (460)	156	82	50	190	165	170	14	1/11	327.5 (377)	156	82	50	190	165	170	14
	1/21	423 (460)	156	82	50	190	165	170	14	1/11	327.5 (377)	156	82	50	190	165	170	14

Note. As for the dimensions not listed here, refer to the catalog or Instruction Manual. ( ): With brake [Unit: mm]

2.4 Comparison of Geared Servo Motors

POINT
●Geared servo motors are not included in the HG-MR, HG-RR series.

2.4.1 Comparison of actual reduction ratios for geared servo motors

Because the actual reduction ratio for some models is different when replacing HC-KFS or MFS_G1 with HG-KR_G1, it is required that an electronic gear be set up.

For general industrial machines: HC-KFS, HC-MFS_G1 → HG-KR_G1

Output (W)	Reduction ratio	Actual reduction ratio	
		HC-KFS and HC-MFS series (G1)	HG-KR series (G1)
50	1/5	9/44	9/44
	1/12	49/576	49/576
	1/20	25/484	25/484
100	1/5	9/44	9/44
	1/12	49/576	49/576
	1/20	25/484	25/484
200	1/5	19/96	19/96
	1/12	25/288	961/11664
	1/20	253/5000	513/9984
400	1/5	19/96	19/96
	1/12	25/288	961/11664
	1/20	253/5000	7/135
750	1/5	1/5	1/5
	1/12	525/6048	7/87
	1/20	625/12544	625/12544

Note. Actual reduction ratios with differences are shown with shading.

2.4.2 Comparison of reducer efficiency of geared servo motors

The gear reducer efficiency is different when HC-KFS or HC-MFS_G2 is replaced with HG-KR_G7, or HC-SFS or HC-RFS_G2 is replaced with HG-SR_G7.

Model	Reducer efficiency (Note)	Substitute model	Reducer efficiency (Note)
HC-KFS_G2	60 to 80%	HG-KR_G7	50 W (reducer model 14A): 12% (reduction ratio 1/5), 22 to 34% (reduction ratio 1/11 to 1/45) 50 W (reducer model 11B)/100 W/400 W/750 W: 48 to 84%
HC-MFS_G2			
HC-SFS_G2	80 to 90%	HG-SR_G7	77 to 92%
HC-RFS_G2			

Note. The reducer efficiency differs depending on the reduction ratio. Also, it changes depending on the operating conditions such as the output torque, speed and rotation, temperature, etc. The numerical value in the table is a typical value in the rated torque, rated speed and rotation and typical temperature, and not a guaranteed value.

2.5 Comparison of Moment of Inertia

(1) HC-KFS motor

Series	Target product			Replacement product		
	Model	Moment of inertia J × 10^{-4} kg•m^2	Load inertia moment ratio	Model	Moment of inertia J × 10^{-4} kg•m^2	Load inertia moment ratio
Small capacity, low inertia HC-KFS series (B): With brake	HC-KFS053(B)	0.053(0.056)	15 times or less	HG-KR053(B)	0.0450(0.0472)	17 times or less
	HC-KFS13(B)	0.084(0.087)		HG-KR13(B)	0.0777(0.0837)	
	HC-KFS23(B)	0.260(0.310)	24 times or less	HG-KR23(B)	0.221(0.243)	26 times or less
	HC-KFS43(B)	0.460(0.510)	22 times or less	HG-KR43(B)	0.371(0.393)	25 times or less
	HC-KFS73(B)	1.51(1.635)	15 times or less	HG-KR73(B)	1.26(1.37)	17 times or less
	HC-KFS46	0.64		HG-KR43	0.371	25 times or less
	HC-KFS410	0.47				
Small capacity, low inertia HC-KFS series with general reducer (G1) (B): With brake	HC-KFS053(B)G1 1/5	0.090(0.093)	5 times or less	HG-KR053(B)G1 1/5	0.0820(0.0840)	5 times or less
	HC-KFS053(B)G1 1/12	0.112(0.115)		HG-KR053(B)G1 1/12	0.104(0.106)	
	HC-KFS053(B)G1 1/20	0.094(0.097)		HG-KR053(B)G1 1/20	0.0860(0.0880)	
	HC-KFS13(B)G1 1/5	0.121(0.124)		HG-KR13(B)G1 1/5	0.115(0.121)	
	HC-KFS13(B)G1 1/12	0.143(0.146)		HG-KR13(B)G1 1/12	0.137(0.143)	
	HC-KFS13(B)G1 1/20	0.125(0.128)		HG-KR13(B)G1 1/20	0.119(0.125)	
	HC-KFS23(B)G1 1/5	0.420(0.470)	7 times or less	HG-KR23(B)G1 1/5	0.375(0.397)	7 times or less
	HC-KFS23(B)G1 1/12	0.470(0.520)		HG-KR23(B)G1 1/12	0.418(0.440)	
	HC-KFS23(B)G1 1/20	0.440(0.490)		HG-KR23(B)G1 1/20	0.391(0.413)	
	HC-KFS43(B)G1 1/5	0.610(0.660)		HG-KR43(B)G1 1/5	0.525(0.547)	
	HC-KFS43(B)G1 1/12	0.660(0.710)		HG-KR43(B)G1 1/12	0.568(0.590)	
	HC-KFS43(B)G1 1/20	0.970(1.02)		HG-KR43(B)G1 1/20	0.881(0.903)	
	HC-KFS73(B)G1 1/5	1.930(2.055)	5 times or less	HG-KR73(B)G1 1/5	1.68(1.79)	5 times or less
	HC-KFS73(B)G1 1/12	2.596(2.721)		HG-KR73(B)G1 1/12	2.35(2.46)	
	HC-KFS73(B)G1 1/20	2.660(2.785)		HG-KR73(B)G1 1/20	2.41(2.52)	
Small capacity, low inertia HC-KFS series with high precision reducer (G2) (B): With brake	HC-KFS053(B)G2 1/5	0.101(0.104)	5 times or less	HG-KR053(B)G7 1/5 (□40)	0.0512(0.0534)	10 times or less
				HG-KR053(B)G7 1/5 (□60)	0.119(0.121)	
	HC-KFS053(B)G2 1/9	0.095(0.098)		HG-KR053(B)G7 1/9	0.0492(0.0514)	
	HC-KFS053(B)G2 1/20	0.104(0.107)		HG-KR053(B)G7 1/21	0.0960(0.0980)	
	HC-KFS053(B)G2 1/29	0.092(0.095)		HG-KR053(B)G7 1/33	0.0900(0.0920)	
	HC-KFS13(B)G2 1/5	0.132(0.135)		HG-KR13(B)G7 1/5 (□40)	0.0839(0.0899)	
				HG-KR13(B)G7 1/5 (□60)	0.152(0.158)	
	HC-KFS13(B)G2 1/9	0.126(0.129)		HG-KR13(B)G7 1/11	0.139(0.145)	
	HC-KFS13(B)G2 1/20	0.176(0.179)		HG-KR13(B)G7 1/21	0.129(0.135)	
	HC-KFS13(B)G2 1/29	0.150(0.153)		HG-KR13(B)G7 1/33	0.141(0.147)	
	HC-KFS23(B)G2 1/5	0.360(0.410)	7 times or less	HG-KR23(B)G7 1/5	0.428(0.450)	14 times or less
	HC-KFS23(B)G2 1/9	0.380(0.430)		HG-KR23(B)G7 1/11	0.424(0.446)	
	HC-KFS23(B)G2 1/20	0.530(0.580)		HG-KR23(B)G7 1/21	0.721(0.743)	
	HC-KFS23(B)G2 1/29	0.450(0.500)		HG-KR23(B)G7 1/33	0.674(0.696)	
	HC-KFS43(B)G2 1/5	0.610(0.660)		HG-KR43(B)G7 1/5	0.578(0.600)	
	HC-KFS43(B)G2 1/9	0.640(0.690)		HG-KR43(B)G7 1/11	0.955(0.977)	
	HC-KFS43(B)G2 1/20	0.740(0.790)		HG-KR43(B)G7 1/21	0.871(0.893)	
	HC-KFS43(B)G2 1/29	0.660(0.710)		HG-KR43(B)G7 1/33	0.927(0.949)	
	HC-KFS73(B)G2 1/5	1.883(2.008)	5 times or less	HG-KR73(B)G7 1/5	1.95(2.06)	10 times or less
	HC-KFS73(B)G2 1/9	1.890(2.015)		HG-KR73(B)G7 1/11	1.83(1.94)	
	HC-KFS73(B)G2 1/20	1.926(2.051)		HG-KR73(B)G7 1/21	2.03(2.14)	
	HC-KFS73(B)G2 1/29	1.820(1.945)		HG-KR73(B)G7 1/33	1.80(1.91)	

Note 1. As for the motor specifications not listed here, refer to the catalog or Instruction Manual. ( ): With brake
2. If the load inertia moment ratio is exceeded, please ask the sales contact.

Series	Target product			Replacement product		
	Model	Moment of inertia J × 10^{-4} kg•m^2	Load inertia moment ratio	Model	Moment of inertia J × 10^{-4} kg•m^2	Load inertia moment ratio
Small capacity, low inertia HC-KFS series with high precision reducer Flange output type (G5) (B): With brake	HC-KFS053(B)G5 1/5	0.121(0.124)	10 times or less	HG-KR053(B)G5 1/5	0.113(0.115)	10 times or less
	HC-KFS053(B)G5 1/11	0.113(0.116)		HG-KR053(B)G5 1/11	0.105(0.107)	
	HC-KFS053(B)G5 1/21	0.104(0.107)		HG-KR053(B)G5 1/21	0.0960(0.0980)	
	HC-KFS053(B)G5 1/33	0.098(0.101)		HG-KR053(B)G5 1/33	0.0900(0.0920)	
	HC-KFS053(B)G5 1/45	0.098(0.101)		HG-KR053(B)G5 1/45	0.0900(0.0920)	
	HC-KFS13(B)G5 1/5	0.152(0.155)		HG-KR13(B)G5 1/5	0.146(0.152)	
	HC-KFS13(B)G5 1/11	0.144(0.147)		HG-KR13(B)G5 1/11	0.138(0.144)	
	HC-KFS13(B)G5 1/21	0.135(0.138)		HG-KR13(B)G5 1/21	0.129(0.135)	
	HC-KFS13(B)G5 1/33	0.146(0.149)		HG-KR13(B)G5 1/33	0.140(0.146)	
	HC-KFS13(B)G5 1/45	0.145(0.148)		HG-KR13(B)G5 1/45	0.139(0.145)	
	HC-KFS23(B)G5 1/5	0.461(0.511)	14 times or less	HG-KR23(B)G5 1/5	0.422(0.444)	14 times or less
	HC-KFS23(B)G5 1/11	0.463(0.513)		HG-KR23(B)G5 1/11	0.424(0.446)	
	HC-KFS23(B)G5 1/21	0.758(0.808)		HG-KR23(B)G5 1/21	0.719(0.741)	
	HC-KFS23(B)G5 1/33	0.712(0.762)		HG-KR23(B)G5 1/33	0.673(0.695)	
	HC-KFS23(B)G5 1/45	0.711(0.761)		HG-KR23(B)G5 1/45	0.672(0.694)	
	HC-KFS43(B)G5 1/5	0.661(0.711)		HG-KR43(B)G5 1/5	0.572(0.594)	
	HC-KFS43(B)G5 1/11	1.04(1.09)		HG-KR43(B)G5 1/11	0.947(0.969)	
	HC-KFS43(B)G5 1/21	0.960(1.01)		HG-KR43(B)G5 1/21	0.869(0.891)	
	HC-KFS43(B)G5 1/33	1.01(1.06)		HG-KR43(B)G5 1/33	0.921(0.943)	
	HC-KFS43(B)G5 1/45	1.00(1.05)		HG-KR43(B)G5 1/45	0.915(0.937)	
	HC-KFS73(B)G5 1/5	2.16(2.28)	10 times or less	HG-KR73(B)G5 1/5	1.91(2.02)	10 times or less
	HC-KFS73(B)G5 1/11	2.07(2.19)		HG-KR73(B)G5 1/11	1.82(1.93)	
	HC-KFS73(B)G5 1/21	2.26(2.39)		HG-KR73(B)G5 1/21	2.01(2.12)	
	HC-KFS73(B)G5 1/33	2.04(2.17)		HG-KR73(B)G5 1/33	1.79(1.90)	
	HC-KFS73(B)G5 1/45	2.04(2.16)		HG-KR73(B)G5 1/45	1.79(1.90)	
Small capacity, low inertia HC-KFS series with high precision reducer Shaft output type (G7) (B): With brake	HC-KFS053(B)G7 1/5	0.127(0.130)	10 times or less	HG-KR053(B)G7 1/5	0.119(0.121)	10 times or less
	HC-KFS053(B)G7 1/11	0.114(0.117)		HG-KR053(B)G7 1/11	0.106(0.108)	
	HC-KFS053(B)G7 1/21	0.104(0.107)		HG-KR053(B)G7 1/21	0.0960(0.0980)	
	HC-KFS053(B)G7 1/33	0.098(0.101)		HG-KR053(B)G7 1/33	0.0900(0.0920)	
	HC-KFS053(B)G7 1/45	0.098(0.101)		HG-KR053(B)G7 1/45	0.0900(0.0920)	
	HC-KFS13(B)G7 1/5	0.158(0.161)		HG-KR13(B)G7 1/5	0.152(0.158)	
	HC-KFS13(B)G7 1/11	0.145(0.148)		HG-KR13(B)G7 1/11	0.139(0.145)	
	HC-KFS13(B)G7 1/21	0.135(0.138)		HG-KR13(B)G7 1/21	0.129(0.135)	
	HC-KFS13(B)G7 1/33	0.147(0.150)		HG-KR13(B)G7 1/33	0.141(0.147)	
	HC-KFS13(B)G7 1/45	0.145(0.148)		HG-KR13(B)G7 1/45	0.139(0.145)	
	HC-KFS23(B)G7 1/5	0.467(0.517)	14 times or less	HG-KR23(B)G7 1/5	0.428(0.450)	14 times or less
	HC-KFS23(B)G7 1/11	0.463(0.513)		HG-KR23(B)G7 1/11	0.424(0.446)	
	HC-KFS23(B)G7 1/21	0.760(0.810)		HG-KR23(B)G7 1/21	0.721(0.743)	
	HC-KFS23(B)G7 1/33	0.713(0.763)		HG-KR23(B)G7 1/33	0.674(0.696)	
	HC-KFS23(B)G7 1/45	0.711(0.761)		HG-KR23(B)G7 1/45	0.672(0.694)	
	HC-KFS43(B)G7 1/5	0.667(0.717)		HG-KR43(B)G7 1/5	0.578(0.600)	
	HC-KFS43(B)G7 1/11	1.04(1.09)		HG-KR43(B)G7 1/11	0.955(0.977)	
	HC-KFS43(B)G7 1/21	0.960(1.01)		HG-KR43(B)G7 1/21	0.871(0.893)	
	HC-KFS43(B)G7 1/33	1.02(1.07)		HG-KR43(B)G7 1/33	0.927(0.949)	
	HC-KFS43(B)G7 1/45	1.01(1.06)		HG-KR43(B)G7 1/45	0.918(0.940)	
	HC-KFS73(B)G7 1/5	2.20(2.32)	10 times or less	HG-KR73(B)G7 1/5	1.95(2.06)	10 times or less
	HC-KFS73(B)G7 1/11	2.08(2.20)		HG-KR73(B)G7 1/11	1.83(1.94)	
	HC-KFS73(B)G7 1/21	2.28(2.40)		HG-KR73(B)G7 1/21	2.03(2.14)	
	HC-KFS73(B)G7 1/33	2.05(2.17)		HG-KR73(B)G7 1/33	1.80(1.91)	
	HC-KFS73(B)G7 1/45	2.04(2.17)		HG-KR73(B)G7 1/45	1.79(1.90)	

Note 1. As for the motor specifications not listed here, refer to the catalog or Instruction Manual. ( ): With brake
2. If the load inertia moment ratio with brake is exceeded, please ask the sales contact.

(2) HC-MFS motor

Series	Target product			Replacement product		
	Model	Moment of inertia J × 10^{-4} kg•m^2	Load inertia moment ratio	Model	Moment of inertia J × 10^{-4} kg•m^2	Load inertia moment ratio
Small capacity, ultra-low inertia HC-MFS series (B): With brake	HC-MFS053(B)	0.019(0.022)	30 times or less	HG-MR053(B)	0.0162(0.0224)	35 times or less
	HC-MFS13(B)	0.03(0.032)		HG-MR13(B)	0.0300(0.0362)	32 times or less
	HC-MFS23(B)	0.088(0.136)		HG-MR23(B)	0.0865(0.109)	
	HC-MFS43(B)	0.143(0.191)		HG-MR43(B)	0.142(0.164)	
	HC-MFS73(B)	0.6(0.725)		HG-MR73(B)	0.586(0.694)	
Small capacity, ultra-low inertia HC-MFS series with general reducer (G1) (B): With brake	HC-MFS053(B)G1 1/5	0.055(0.058)	25 times or less	HG-KR053(B)G1 1/5	0.0820(0.0840)	5 times or less
	HC-MFS053(B)G1 1/12	0.077(0.080)		HG-KR053(B)G1 1/12	0.104(0.106)	
	HC-MFS053(B)G1 1/20	0.059(0.062)		HG-KR053(B)G1 1/20	0.0860(0.0880)	
	HC-MFS13(B)G1 1/5	0.067(0.069)		HG-KR13(B)G1 1/5	0.115(0.121)	
	HC-MFS13(B)G1 1/12	0.089(0.091)		HG-KR13(B)G1 1/12	0.137(0.143)	
	HC-MFS13(B)G1 1/20	0.071(0.073)		HG-KR13(B)G1 1/20	0.119(0.125)	
	HC-MFS23(B)G1 1/5	0.249(0.289)		HG-KR23(B)G1 1/5	0.375(0.397)	7 times or less
	HC-MFS23(B)G1 1/12	0.293(0.333)		HG-KR23(B)G1 1/12	0.418(0.440)	
	HC-MFS23(B)G1 1/20	0.266(0.306)		HG-KR23(B)G1 1/20	0.391(0.413)	
	HC-MFS43(B)G1 1/5	0.296(0.344)		HG-KR43(B)G1 1/5	0.525(0.547)	
	HC-MFS43(B)G1 1/12	0.339(0.388)		HG-KR43(B)G1 1/12	0.568(0.590)	
	HC-MFS43(B)G1 1/20	0.653(0.700)		HG-KR43(B)G1 1/20	0.881(0.903)	
	HC-MFS73(B)G1 1/5	1.02(1.145)		HG-KR73(B)G1 1/5	1.68(1.79)	5 times or less
	HC-MFS73(B)G1 1/12	1.686(1.811)		HG-KR73(B)G1 1/12	2.35(2.46)	
	HC-MFS73(B)G1 1/20	1.75(1.875)		HG-KR73(B)G1 1/20	2.41(2.52)	
Small capacity, ultra-low inertia HC-MFS series with high precision reducer (G2) (B): With brake	HC-MFS053(B)G2 1/5	0.067(0.070)	25 times or less	HG-KR053(B)G7 1/5 (□40)	0.0512(0.0534)	10 times or less
				HG-KR053(B)G7 1/5 (□60)	0.119(0.121)	
	HC-MFS053(B)G2 1/9	0.060(0.063)		HG-KR053(B)G7 1/9	0.0492(0.0514)	
	HC-MFS053(B)G2 1/20	0.069(0.072)		HG-KR053(B)G7 1/21	0.0960(0.0980)	
	HC-MFS053(B)G2 1/29	0.057(0.060)		HG-KR053(B)G7 1/33	0.0900(0.0920)	
	HC-MFS13(B)G2 1/5	0.078(0.080)		HG-KR13(B)G7 1/5 (□40)	0.0839(0.0899)	
				HG-KR13(B)G7 1/5 (□60)	0.152(0.158)	
	HC-MFS13(B)G2 1/9	0.072(0.074)		HG-KR13(B)G7 1/11	0.139(0.145)	
	HC-MFS13(B)G2 1/20	0.122(0.124)		HG-KR13(B)G7 1/21	0.129(0.135)	
	HC-MFS13(B)G2 1/29	0.096(0.098)		HG-KR13(B)G7 1/33	0.141(0.147)	
	HC-MFS23(B)G2 1/5	0.191(0.239)		HG-KR23(B)G7 1/5	0.428(0.450)	14 times or less
	HC-MFS23(B)G2 1/9	0.208(0.256)		HG-KR23(B)G7 1/11	0.424(0.446)	
	HC-MFS23(B)G2 1/20	0.357(0.405)		HG-KR23(B)G7 1/21	0.721(0.743)	
	HC-MFS23(B)G2 1/29	0.276(0.324)		HG-KR23(B)G7 1/33	0.674(0.696)	
	HC-MFS43(B)G2 1/5	0.295(0.344)		HG-KR43(B)G7 1/5	0.578(0.600)	
	HC-MFS43(B)G2 1/9	0.323(0.372)		HG-KR43(B)G7 1/11	0.955(0.977)	
	HC-MFS43(B)G2 1/20	0.426(0.475)		HG-KR43(B)G7 1/21	0.871(0.893)	
	HC-MFS43(B)G2 1/29	0.338(0.386)		HG-KR43(B)G7 1/33	0.927(0.949)	
	HC-MFS73(B)G2 1/5	0.973(1.098)		HG-KR73(B)G7 1/5	1.95(2.06)	10 times or less
	HC-MFS73(B)G2 1/9	0.980(1.105)		HG-KR73(B)G7 1/11	1.83(1.94)	
	HC-MFS73(B)G2 1/20	1.016(1.141)		HG-KR73(B)G7 1/21	2.03(2.14)	
	HC-MFS73(B)G2 1/29	0.910(1.035)		HG-KR73(B)G7 1/33	1.80(1.91)	

Note 1. As for the motor specifications not listed here, refer to the catalog or Instruction Manual. ( ): With brake
2.. If the load inertia moment ratio with brake is exceeded, please ask the sales contact.

Series	Target product			Replacement product		
	Model	Moment of inertia J × 10^{-4} kg•m^2	Load inertia moment ratio	Model	Moment of inertia J × 10^{-4} kg•m^2	Load inertia moment ratio
Small capacity, ultra-low inertia HC-MFS series with high precision reducer Flange output type (G5) (B): With brake	HC-MFS053(B)G5 1/5	0.087(0.090)	25 times or less	HG-KR053(B)G5 1/5	0.113(0.115)	10 times or less
	HC-MFS053(B)G5 1/11	0.079(0.082)		HG-KR053(B)G5 1/11	0.105(0.107)	
	HC-MFS053(B)G5 1/21	0.070(0.073)		HG-KR053(B)G5 1/21	0.0960(0.0980)	
	HC-MFS053(B)G5 1/33	0.064(0.067)		HG-KR053(B)G5 1/33	0.0900(0.0920)	
	HC-MFS053(B)G5 1/45	0.064(0.067)		HG-KR053(B)G5 1/45	0.0900(0.0920)	
	HC-MFS13(B)G5 1/5	0.098(0.100)		HG-KR13(B)G5 1/5	0.146(0.152)	
	HC-MFS13(B)G5 1/11	0.090(0.092)		HG-KR13(B)G5 1/11	0.138(0.144)	
	HC-MFS13(B)G5 1/21	0.081(0.083)		HG-KR13(B)G5 1/21	0.129(0.135)	
	HC-MFS13(B)G5 1/33	0.092(0.094)		HG-KR13(B)G5 1/33	0.140(0.146)	
	HC-MFS13(B)G5 1/45	0.091(0.093)		HG-KR13(B)G5 1/45	0.139(0.145)	
	HC-MFS23(B)G5 1/5	0.289(0.337)		HG-KR23(B)G5 1/5	0.422(0.444)	14 times or less
	HC-MFS23(B)G5 1/11	0.291(0.339)		HG-KR23(B)G5 1/11	0.424(0.446)	
	HC-MFS23(B)G5 1/21	0.586(0.634)		HG-KR23(B)G5 1/21	0.719(0.741)	
	HC-MFS23(B)G5 1/33	0.540(0.588)		HG-KR23(B)G5 1/33	0.673(0.695)	
	HC-MFS23(B)G5 1/45	0.539(0.587)		HG-KR23(B)G5 1/45	0.672(0.694)	
	HC-MFS43(B)G5 1/5	0.344(0.392)		HG-KR43(B)G5 1/5	0.572(0.594)	
	HC-MFS43(B)G5 1/11	0.719(0.767)		HG-KR43(B)G5 1/11	0.947(0.969)	
	HC-MFS43(B)G5 1/21	0.641(0.689)		HG-KR43(B)G5 1/21	0.869(0.891)	
	HC-MFS43(B)G5 1/33	0.693(0.741)		HG-KR43(B)G5 1/33	0.921(0.943)	
	HC-MFS43(B)G5 1/45	0.687(0.735)		HG-KR43(B)G5 1/45	0.915(0.937)	
	HC-MFS73(B)G5 1/5	1.25(1.37)		HG-KR73(B)G5 1/5	1.91(2.02)	10 times or less
	HC-MFS73(B)G5 1/11	1.16(1.28)		HG-KR73(B)G5 1/11	1.82(1.93)	
	HC-MFS73(B)G5 1/21	1.35(1.48)		HG-KR73(B)G5 1/21	2.01(2.12)	
	HC-MFS73(B)G5 1/33	1.13(1.26)		HG-KR73(B)G5 1/33	1.79(1.90)	
	HC-MFS73(B)G5 1/45	1.13(1.25)		HG-KR73(B)G5 1/45	1.79(1.90)	
Small capacity, ultra-low inertia HC-MFS series with high precision reducer Shaft output type (G7) (B): With brake	HC-MFS053(B)G7 1/5	0.093(0.096)	25 times or less	HG-KR053(B)G7 1/5	0.119(0.121)	10 times or less
	HC-MFS053(B)G7 1/11	0.080(0.083)		HG-KR053(B)G7 1/11	0.106(0.108)	
	HC-MFS053(B)G7 1/21	0.070(0.073)		HG-KR053(B)G7 1/21	0.0960(0.0980)	
	HC-MFS053(B)G7 1/33	0.064(0.067)		HG-KR053(B)G7 1/33	0.0900(0.0920)	
	HC-MFS053(B)G7 1/45	0.064(0.067)		HG-KR053(B)G7 1/45	0.0900(0.0920)	
	HC-MFS13(B)G7 1/5	0.104(0.106)		HG-KR13(B)G7 1/5	0.152(0.158)	
	HC-MFS13(B)G7 1/11	0.091(0.093)		HG-KR13(B)G7 1/11	0.139(0.145)	
	HC-MFS13(B)G7 1/21	0.081(0.083)		HG-KR13(B)G7 1/21	0.129(0.135)	
	HC-MFS13(B)G7 1/33	0.093(0.095)		HG-KR13(B)G7 1/33	0.141(0.147)	
	HC-MFS13(B)G7 1/45	0.091(0.093)		HG-KR13(B)G7 1/45	0.139(0.145)	
	HC-MFS23(B)G7 1/5	0.295(0.343)		HG-KR23(B)G7 1/5	0.428(0.450)	14 times or less
	HC-MFS23(B)G7 1/11	0.291(0.339)		HG-KR23(B)G7 1/11	0.424(0.446)	
	HC-MFS23(B)G7 1/21	0.588(0.636)		HG-KR23(B)G7 1/21	0.721(0.743)	
	HC-MFS23(B)G7 1/33	0.541(0.589)		HG-KR23(B)G7 1/33	0.674(0.696)	
	HC-MFS23(B)G7 1/45	0.539(0.587)		HG-KR23(B)G7 1/45	0.672(0.694)	
	HC-MFS43(B)G7 1/5	0.350(0.398)		HG-KR43(B)G7 1/5	0.578(0.600)	
	HC-MFS43(B)G7 1/11	0.727(0.775)		HG-KR43(B)G7 1/11	0.955(0.977)	
	HC-MFS43(B)G7 1/21	0.643(0.691)		HG-KR43(B)G7 1/21	0.871(0.893)	
	HC-MFS43(B)G7 1/33	0.699(0.747)		HG-KR43(B)G7 1/33	0.927(0.949)	
	HC-MFS43(B)G7 1/45	0.690(0.738)		HG-KR43(B)G7 1/45	0.918(0.940)	
	HC-MFS73(B)G7 1/5	1.29(1.41)		HG-KR73(B)G7 1/5	1.95(2.06)	10 times or less
	HC-MFS73(B)G7 1/11	1.17(1.29)		HG-KR73(B)G7 1/11	1.83(1.94)	
	HC-MFS73(B)G7 1/21	1.37(1.49)		HG-KR73(B)G7 1/21	2.03(2.14)	
	HC-MFS73(B)G7 1/33	1.14(1.26)		HG-KR73(B)G7 1/33	1.80(1.91)	
	HC-MFS73(B)G7 1/45	1.13(1.26)		HG-KR73(B)G7 1/45	1.79(1.90)	

Note 1. As for the motor specifications not listed here, refer to the catalog or Instruction Manual. ( ): With brake
2. If the load inertia moment ratio with brake is exceeded, please ask the sales contact.

(3) HC-SFS motor

Series	Target product			Replacement product		
	Model	Moment of inertia J × 10^{-4} kg•m^2	Load inertia moment ratio	Model	Moment of inertia J × 10^{-4} kg•m^2	Load inertia moment ratio
Medium capacity, medium inertia HC-SFS series (B): With brake	HC-SFS81(B)	20.0(22.0)	15 times or less	HG-SR81(B)	16.0(18.2)	17 times or less
	HC-SFS121(B)	42.5(52.5)		HG-SR121(B)	46.8(56.5)	15 times or less
	HC-SFS201(B)	82.0(92.0)		HG-SR201(B)	78.6(88.2)	
	HC-SFS301(B)	101(111)		HG-SR301(B)	99.7(109)	
	HC-SFS52(B),53(B) HC-SFS524(B)	6.6(8.6)		HG-SR52(B) HG-SR524(B)	7.26(9.48)	
	HC-SFS102(B),103(B) HC-SFS1024(B)	13.7(15.7)		HG-SR102(B) HG-SR1024(B)	11.6(13.8)	17 times or less
	HC-SFS152(B),153(B) HC-SFS1524(B)	20.0(22.0)		HG-SR152(B) HG-SR1524(B)	16.0(18.2)	
	HC-SFS202(B),203(B) HC-SFS2024(B)	42.5(52.5)		HG-SR202(B) HG-SR2024(B)	46.8(56.5)	15 times or less
	HC-SFS352(B),353(B) HC-SFS3524(B)	82.0(92.0)		HG-SR352(B) HG-SR3524(B)	78.6(88.2)	
	HC-SFS502(B) HC-SFS5024(B)	101(111)		HG-SR502(B) HG-SR5024(B)	99.7(109)	
	HC-SFS702(B) HC-SFS7024(B)	160(170)		HG-SR702(B) HG-SR7024(B)	151(161)	
Medium capacity, medium inertia HC-SFS series with general reducer (4): 400 V specifications (B): With brake G1: Flange-mounting G1H: Foot-mounting	HC-SFS52(4)(B)G1(H) 1/6	7.33(9.03)	4 times or less	HG-SR52(4)(B)G1(H) 1/6	8.08(10.3)	4 times or less
	HC-SFS52(4)(B)G1(H) 1/11	6.95(8.65)		HG-SR52(4)(B)G1(H) 1/11	7.65(9.85)	
	HC-SFS52(4)(B)G1(H) 1/17	6.85(8.55)		HG-SR52(4)(B)G1(H) 1/17	7.53(9.73)	
	HC-SFS52(4)(B)G1(H) 1/29	6.78(8.48)		HG-SR52(4)(B)G1(H) 1/29	7.47(9.67)	
	HC-SFS52(4)(B)G1(H) 1/35	7.5(9.2)		HG-SR52(4)(B)G1(H) 1/35	8.26(10.5)	
	HC-SFS52(4)(B)G1(H) 1/43	7.45(9.15)		HG-SR52(4)(B)G1(H) 1/43	8.22(10.4)	
	HC-SFS52(4)(B)G1(H) 1/59	7.43(9.13)		HG-SR52(4)(B)G1(H) 1/59	8.18(10.4)	
	HC-SFS102(4)(B)G1(H) 1/6	16.8(18.5)		HG-SR102(4)(B)G1(H) 1/6	14.8(17.0)	
	HC-SFS102(4)(B)G1(H) 1/11	15.3(17.0)		HG-SR102(4)(B)G1(H) 1/11	13.3(15.5)	
	HC-SFS102(4)(B)G1(H) 1/17	14.9(16.6)		HG-SR102(4)(B)G1(H) 1/17	12.9(15.1)	
	HC-SFS102(4)(B)G1(H) 1/29	14.6(16.3)		HG-SR102(4)(B)G1(H) 1/29	12.6(14.8)	
	HC-SFS102(4)(B)G1(H) 1/35	14.6(16.3)		HG-SR102(4)(B)G1(H) 1/35	12.6(14.8)	
	HC-SFS102(4)(B)G1(H) 1/43	15.7(17.4)		HG-SR102(4)(B)G1(H) 1/43	13.8(16.0)	
	HC-SFS102(4)(B)G1(H) 1/59	19.5(21.2)		HG-SR102(4)(B)G1(H) 1/59	19.1(21.3)	
	HC-SFS152(4)(B)G1(H) 1/6	23.1(24.8)		HG-SR152(4)(B)G1(H) 1/6	19.2(21.4)	
	HC-SFS152(4)(B)G1(H) 1/11	21.5(23.2)		HG-SR152(4)(B)G1(H) 1/11	17.7(19.9)	
	HC-SFS152(4)(B)G1(H) 1/17	21.2(22.9)		HG-SR152(4)(B)G1(H) 1/17	17.3(19.5)	
	HC-SFS152(4)(B)G1(H) 1/29	22.1(23.8)		HG-SR152(4)(B)G1(H) 1/29	18.4(20.6)	
	HC-SFS152(4)(B)G1(H) 1/35	22.0(23.7)		HG-SR152(4)(B)G1(H) 1/35	18.3(20.5)	
	HC-SFS152(4)(B)G1(H) 1/43	25.8(27.5)		HG-SR152(4)(B)G1(H) 1/43	23.6(25.8)	
	HC-SFS152(4)(B)G1(H) 1/59	25.7(27.4)		HG-SR152(4)(B)G1(H) 1/59	23.5(25.7)	
	HC-SFS202(4)(B)G1(H) 1/6	45.6(55.6)		HG-SR202(4)(B)G1(H) 1/6	50.0(59.4)	
	HC-SFS202(4)(B)G1(H) 1/11	44.1(54.1)		HG-SR202(4)(B)G1(H) 1/11	48.4(57.8)	
	HC-SFS202(4)(B)G1(H) 1/17	43.7(53.7)		HG-SR202(4)(B)G1(H) 1/17	48.1(57.5)	
	HC-SFS202(4)(B)G1(H) 1/29	48.9(58.9)		HG-SR202(4)(B)G1(H) 1/29	54.8(64.2)	
	HC-SFS202(4)(B)G1(H) 1/35	48.6(58.6)		HG-SR202(4)(B)G1(H) 1/35	54.5(63.9)	
	HC-SFS202(4)(B)G1(H) 1/43	48.4(58.4)		HG-SR202(4)(B)G1(H) 1/43	54.3(63.7)	
	HC-SFS202(4)(B)G1(H) 1/59	48.3(58.3)		HG-SR202(4)(B)G1(H) 1/59	54.2(63.6)	
	HC-SFS352(4)(B)G1(H) 1/6	90.1(100.1)		HG-SR352(4)(B)G1(H) 1/6	87.1(96.5)	
	HC-SFS352(4)(B)G1(H) 1/11	86.2(96.2)		HG-SR352(4)(B)G1(H) 1/11	82.8(92.2)	
	HC-SFS352(4)(B)G1(H) 1/17	85.0(95.0)		HG-SR352(4)(B)G1(H) 1/17	81.5(90.9)	
	HC-SFS352(4)(B)G1(H) 1/29	88.4(98.4)		HG-SR352(4)(B)G1(H) 1/29	86.6(96.0)	
	HC-SFS352(4)(B)G1(H) 1/35	88.1(98.1)		HG-SR352(4)(B)G1(H) 1/35	86.3(95.7)	

Note 1. As for the motor specifications not listed here, refer to the catalog or Instruction Manual. ( ): With brake
2.. If the load inertia moment ratio with brake is exceeded, please ask the sales contact.

Series	Target product			Replacement product		
	Model	Moment of inertia J × 10^{-4} kg•m^2	Load inertia moment ratio	Model	Moment of inertia J × 10^{-4} kg•m^2	Load inertia moment ratio
Medium capacity, medium inertia HC-SFS series with general reducer (4): 400 V specifications (B): With brake G1: Flange-mounting G1H: Foot-mounting	HC-SFS352(4)(B)G1(H) 1/43	106.5(116.5)	4 times or less	HG-SR352(4)(B)G1(H) 1/43	105(114)	4 times or less
	HC-SFS352(4)(B)G1(H) 1/59	105.9(115.9)		HG-SR352(4)(B)G1(H) 1/59	104(113)	
	HC-SFS502(4)(B)G1(H) 1/11	113.4(123.4)		HG-SR502(4)(B)G1(H) 1/11	114(123)	
	HC-SFS502(4)(B)G1(H) 1/17	109.4(119.4)		HG-SR502(4)(B)G1(H) 1/17	110(119)	
	HC-SFS502(4)(B)G1(H) 1/29	138.5(148.5)		HG-SR502(4)(B)G1(H) 1/29	141(150)	
	HC-SFS502(4)(B)G1(H) 1/35	138.0(148.0)		HG-SR502(4)(B)G1(H) 1/35	140(150)	
	HC-SFS502(4)(B)G1(H) 1/43	137.0(147.0)		HG-SR502(4)(B)G1(H) 1/43	139(149)	
	HC-SFS702(4)(B)G1(H) 1/11	198.8(208.8)		HG-SR702(4)(B)G1(H) 1/11	190(199)	
	HC-SFS702(4)(B)G1(H) 1/17	190.0(200.0)		HG-SR702(4)(B)G1(H) 1/17	182(192)	
	HC-SFS702(4)(B)G1(H) 1/29	197.5(207.5)		HG-SR702(4)(B)G1(H) 1/29	192(202)	
	HC-SFS702(4)(B)G1(H) 1/35	197.0(207.0)		HG-SR702(4)(B)G1(H) 1/35	192(201)	
	HC-SFS702(4)(B)G1(H) 1/43	256.8(266.8)		HG-SR702(4)(B)G1(H) 1/43	267(277)	
Medium capacity, medium inertia HC-SFS series with high precision reducer (G2) (4): 400 V specifications (B): With brake	HC-SFS52(4)(B)G2 1/5	7.9(9.6)	5 times or less	HG-SR52(4)(B)G7 1/5	7.95(10.2)	10 times or less
	HC-SFS52(4)(B)G2 1/9	7.55(9.25)		HG-SR52(4)(B)G7 1/11	7.82(10.0)	
	HC-SFS52(4)(B)G2 1/20	8.03(9.73)		HG-SR52(4)(B)G7 1/21	10.2(12.4)	
	HC-SFS52(4)(B)G2 1/29	9.4(11.1)		HG-SR52(4)(B)G7 1/33	9.96(12.2)	
	HC-SFS52(4)(B)G2 1/45	8.43(10.1)		HG-SR52(4)(B)G7 1/45	9.96(12.2)	
	HC-SFS102(4)(B)G2 1/5	15.0(16.7)		HG-SR102(4)(B)G7 1/5	12.3(14.5)	
	HC-SFS102(4)(B)G2 1/9	14.6(16.3)		HG-SR102(4)(B)G7 1/11	15.0(17.2)	
	HC-SFS102(4)(B)G2 1/20	18.4(20.1)		HG-SR102(4)(B)G7 1/21	14.5(16.7)	
	HC-SFS102(4)(B)G2 1/29	16.5(18.2)		HG-SR102(4)(B)G7 1/33	16.3(18.5)	
	HC-SFS102(4)(B)G2 1/45	20.3(22.0)		HG-SR102(4)(B)G7 1/45	16.3(18.5)	
	HC-SFS152(4)(B)G2 1/5	21.2(22.9)		HG-SR152(4)(B)G7 1/5	16.7(18.9)	
	HC-SFS152(4)(B)G2 1/9	24.7(26.4)		HG-SR152(4)(B)G7 1/11	19.4(21.6)	
	HC-SFS152(4)(B)G2 1/20	24.6(26.3)		HG-SR152(4)(B)G7 1/21	21.7(23.9)	
	HC-SFS152(4)(B)G2 1/29	30.3(32.0)		HG-SR152(4)(B)G7 1/33	20.7(22.9)	
	HC-SFS152(4)(B)G2 1/45	26.5(28.2)		HG-SR152(4)(B)G7 1/45	20.7(22.9)	
	HC-SFS202(4)(B)G2 1/5	49.6(59.6)		HG-SR202(4)(B)G7 1/5	51.7(61.4)	
	HC-SFS202(4)(B)G2 1/9	47.2(57.2)		HG-SR202(4)(B)G7 1/11	51.3(61.0)	
	HC-SFS202(4)(B)G2 1/20	59.6(69.6)		HG-SR202(4)(B)G7 1/21	53.3(63.0)	
	HC-SFS202(4)(B)G2 1/29	52.8(62.8)		HG-SR202(4)(B)G7 1/33	52.2(61.9)	
	HC-SFS202(4)(B)G2 1/45	49.1(59.1)		HG-SR202(4)(B)G7 1/45	52.2(61.9)	
	HC-SFS352(4)(B)G2 1/5	99.4(109.4)		HG-SR352(4)(B)G7 1/5	83.5(93.1)	
	HC-SFS352(4)(B)G2 1/9	91.5(101.5)		HG-SR352(4)(B)G7 1/11	87.0(96.6)	
	HC-SFS352(4)(B)G2 1/20	99.1(109.1)		HG-SR352(4)(B)G7 1/21	85.1(94.7)	
	HC-SFS502(4)(B)G2 1/5	118.4(128.4)		HG-SR502(4)(B)G7 1/5	111(121)	
	HC-SFS502(4)(B)G2 1/9	110.5(120.5)		HG-SR502(4)(B)G7 1/11	108(117)	
	HC-SFS702(4)(B)G2 1/5	177.4(187.4)		HG-SR702(4)(B)G7 1/5	163(173)	

Note 1. As for the motor specifications not listed here, refer to the catalog or Instruction Manual. ( ): With brake
2. If the load inertia moment ratio with brake is exceeded, please ask the sales contact.

Series	Target product			Replacement product		
	Model	Moment of inertia J × 10^{-4} kg•m^2	Load inertia moment ratio	Model	Moment of inertia J × 10^{-4} kg•m^2	Load inertia moment ratio
Medium capacity, medium inertia HC-SFS series with high precision reducer Flange output type (G5) (4): 400 V specifications (B): With brake	HC-SFS52(4)(B)G5 1/5	7.25(9.25)	10 times or less	HG-SR52(4)(B)G5 1/5	7.91(10.1)	10 times or less
	HC-SFS52(4)(B)G5 1/11	7.16(9.16)		HG-SR52(4)(B)G5 1/11	7.82(10.0)	
	HC-SFS52(4)(B)G5 1/21	9.50(11.5)		HG-SR52(4)(B)G5 1/21	10.2(12.4)	
	HC-SFS52(4)(B)G5 1/33	9.30(11.3)		HG-SR52(4)(B)G5 1/33	9.96(12.2)	
	HC-SFS52(4)(B)G5 1/45	9.30(11.3)		HG-SR52(4)(B)G5 1/45	9.96(12.2)	
	HC-SFS102(4)(B)G5 1/5	14.4(16.4)		HG-SR102(4)(B)G5 1/5	12.3(14.5)	
	HC-SFS102(4)(B)G5 1/11	17.0(19.0)		HG-SR102(4)(B)G5 1/11	14.9(17.1)	
	HC-SFS102(4)(B)G5 1/21	16.6(18.6)		HG-SR102(4)(B)G5 1/21	14.5(16.7)	
	HC-SFS102(4)(B)G5 1/33	18.4(20.4)		HG-SR102(4)(B)G5 1/33	16.3(18.5)	
	HC-SFS102(4)(B)G5 1/45	18.3(20.3)		HG-SR102(4)(B)G5 1/45	16.2(18.4)	
	HC-SFS152(4)(B)G5 1/5	20.7(22.7)		HG-SR152(4)(B)G5 1/5	16.7(18.9)	
	HC-SFS152(4)(B)G5 1/11	23.3(25.3)		HG-SR152(4)(B)G5 1/11	19.3(21.5)	
	HC-SFS152(4)(B)G5 1/21	25.7(27.7)		HG-SR152(4)(B)G5 1/21	21.7(23.9)	
	HC-SFS152(4)(B)G5 1/33	24.7(26.7)		HG-SR152(4)(B)G5 1/33	20.7(22.9)	
	HC-SFS152(4)(B)G5 1/45	24.6(26.6)		HG-SR152(4)(B)G5 1/45	20.6(22.8)	
	HC-SFS202(4)(B)G5 1/5	47.1(57.1)		HG-SR202(4)(B)G5 1/5	51.4(61.1)	
	HC-SFS202(4)(B)G5 1/11	46.9(56.9)		HG-SR202(4)(B)G5 1/11	51.2(60.9)	
	HC-SFS202(4)(B)G5 1/21	48.9(58.9)		HG-SR202(4)(B)G5 1/21	53.2(62.9)	
	HC-SFS202(4)(B)G5 1/33	47.9(57.9)		HG-SR202(4)(B)G5 1/33	52.2(61.9)	
	HC-SFS202(4)(B)G5 1/45	47.9(57.9)		HG-SR202(4)(B)G5 1/45	52.2(61.9)	
	HC-SFS352(4)(B)G5 1/5	86.6(96.6)		HG-SR352(4)(B)G5 1/5	83.2(92.8)	
	HC-SFS352(4)(B)G5 1/11	90.1(100)		HG-SR352(4)(B)G5 1/11	86.7(96.3)	
	HC-SFS352(4)(B)G5 1/21	88.4(98.4)		HG-SR352(4)(B)G5 1/21	85.0(94.6)	
	HC-SFS502(4)(B)G5 1/5	111(121)		HG-SR502(4)(B)G5 1/5	110(119)	
	HC-SFS502(4)(B)G5 1/11	109(119)		HG-SR502(4)(B)G5 1/11	108(117)	
	HC-SFS702(4)(B)G5 1/5	170(180)		HG-SR702(4)(B)G5 1/5	161(171)	
Medium capacity, medium inertia HC-SFS series with high precision reducer Shaft output type (G7) (4): 400 V specifications (B): With brake	HC-SFS52(4)(B)G7 1/5	7.29(9.29)	10 times or less	HG-SR52(4)(B)G7 1/5	7.95(10.2)	10 times or less
	HC-SFS52(4)(B)G7 1/11	7.16(9.16)		HG-SR52(4)(B)G7 1/11	7.82(10.0)	
	HC-SFS52(4)(B)G7 1/21	9.50(11.5)		HG-SR52(4)(B)G7 1/21	10.2(12.4)	
	HC-SFS52(4)(B)G7 1/33	9.30(11.3)		HG-SR52(4)(B)G7 1/33	9.96(12.2)	
	HC-SFS52(4)(B)G7 1/45	9.30(11.3)		HG-SR52(4)(B)G7 1/45	9.96(12.2)	
	HC-SFS102(4)(B)G7 1/5	14.4(16.4)		HG-SR102(4)(B)G7 1/5	12.3(14.5)	
	HC-SFS102(4)(B)G7 1/11	17.1(19.1)		HG-SR102(4)(B)G7 1/11	15.0(17.2)	
	HC-SFS102(4)(B)G7 1/21	16.6(18.6)		HG-SR102(4)(B)G7 1/21	14.5(16.7)	
	HC-SFS102(4)(B)G7 1/33	18.4(20.4)		HG-SR102(4)(B)G7 1/33	16.3(18.5)	
	HC-SFS102(4)(B)G7 1/45	18.4(20.4)		HG-SR102(4)(B)G7 1/45	16.3(18.5)	
	HC-SFS152(4)(B)G7 1/5	20.7(22.7)		HG-SR152(4)(B)G7 1/5	16.7(18.9)	
	HC-SFS152(4)(B)G7 1/11	23.4(25.4)		HG-SR152(4)(B)G7 1/11	19.4(21.6)	
	HC-SFS152(4)(B)G7 1/21	25.7(27.7)		HG-SR152(4)(B)G7 1/21	21.7(23.9)	
	HC-SFS152(4)(B)G7 1/33	24.7(26.7)		HG-SR152(4)(B)G7 1/33	20.7(22.9)	
	HC-SFS152(4)(B)G7 1/45	24.7(26.7)		HG-SR152(4)(B)G7 1/45	20.7(22.9)	
	HC-SFS202(4)(B)G7 1/5	47.4(57.4)		HG-SR202(4)(B)G7 1/5	51.7(61.4)	
	HC-SFS202(4)(B)G7 1/11	47.0(57.0)		HG-SR202(4)(B)G7 1/11	51.3(61.0)	
	HC-SFS202(4)(B)G7 1/21	49.0(59.0)		HG-SR202(4)(B)G7 1/21	53.3(63.0)	
	HC-SFS202(4)(B)G7 1/33	47.9(57.9)		HG-SR202(4)(B)G7 1/33	52.2(61.9)	
	HC-SFS202(4)(B)G7 1/45	47.9(57.9)		HG-SR202(4)(B)G7 1/45	52.2(61.9)	
	HC-SFS352(4)(B)G7 1/5	86.9(96.9)		HG-SR352(4)(B)G7 1/5	83.5(93.1)	
	HC-SFS352(4)(B)G7 1/11	90.4(100)		HG-SR352(4)(B)G7 1/11	87.0(96.6)	
	HC-SFS352(4)(B)G7 1/21	88.5(98.5)		HG-SR352(4)(B)G7 1/21	85.1(94.7)	
	HC-SFS502(4)(B)G7 1/5	113(123)		HG-SR502(4)(B)G7 1/5	111(121)	
	HC-SFS502(4)(B)G7 1/11	109(119)		HG-SR502(4)(B)G7 1/11	108(117)	
	HC-SFS702(4)(B)G7 1/5	172(182)		HG-SR702(4)(B)G7 1/5	163(173)	

Note 1. As for the motor specifications not listed here, refer to the catalog or Instruction Manual. ( ): With brake
2. If the load inertia moment ratio with brake is exceeded, please ask the sales contact.

(4) HC-RFS motor

Series	Target product			Replacement product		
	Model	Moment of inertia J × 10^{-4} kg•m^2	Load inertia moment ratio	Model	Moment of inertia J × 10^{-4} kg•m^2	Load inertia moment ratio
Medium capacity, ultra-low inertia HC-RFS series (B): With brake	HC-RFS103(B)	1.5(1.85)	5 times or less	HG-RR103(B)	1.50(1.85)	5 times or less
	HC-RFS153(B)	1.9(2.25)		HG-RR153(B)	1.90(2.25)	
	HC-RFS203(B)	2.3(2.65)		HG-RR203(B)	2.30(2.65)	
	HC-RFS353(B)	8.6(11.8)		HG-RR353(B)	8.30(11.8)	
	HC-RFS503(B)	12.0(15.5)		HG-RR503(B)	12.0(15.5)	
Medium capacity, ultra-low inertia HC-RFS series with high precision reducer (G2) (B): With brake	HC-RFS103(B)G2 1/5	4.95(5.3)	5 times or less	HG-SR102(B)G7 1/5	12.3(14.5)	10 times or less
	HC-RFS103(B)G2 1/9	4.6(4.95)		HG-SR102(B)G7 1/11	15.0(17.2)	
	HC-RFS103(B)G2 1/20	8.35(8.7)		HG-SR102(B)G7 1/21	14.5(16.7)	
	HC-RFS103(B)G2 1/29	6.45(6.8)		HG-SR102(B)G7 1/33	16.3(18.5)	
	HC-RFS103(B)G2 1/45	5.48(5.83)		HG-SR102(B)G7 1/45	16.3(18.5)	
	HC-RFS153(B)G2 1/5	5.35(5.7)		HG-SR152(B)G7 1/5	16.7(18.9)	
	HC-RFS153(B)G2 1/9	6.68(7.03)		HG-SR152(B)G7 1/11	19.4(21.6)	
	HC-RFS153(B)G2 1/20	8.75(9.1)		HG-SR152(B)G7 1/21	21.7(23.9)	
	HC-RFS153(B)G2 1/29	6.85(7.2)		HG-SR152(B)G7 1/33	20.7(22.9)	
	HC-RFS153(B)G2 1/45	8.55(8.9)		HG-SR152(B)G7 1/45	20.7(22.9)	
	HC-RFS203(B)G2 1/5	5.75(6.1)		HG-SR202(B)G7 1/5	51.7(61.4)	
	HC-RFS203(B)G2 1/9	7.08(7.43)		HG-SR202(B)G7 1/11	51.3(61.0)	
	HC-RFS203(B)G2 1/20	9.15(9.5)		HG-SR202(B)G7 1/21	53.3(63.0)	
	HC-RFS203(B)G2 1/29	12.7(13.1)		HG-SR202(B)G7 1/33	52.2(61.9)	
	HC-RFS203(B)G2 1/45	8.95(9.3)		HG-SR202(B)G7 1/45	52.2(61.9)	
	HC-RFS353(B)G2 1/5	18.8(20.8)		HG-SR352(B)G7 1/5	83.5(93.1)	
	HC-RFS353(B)G2 1/9	21.1(23.1)		HG-SR352(B)G7 1/11	87.0(96.6)	
	HC-RFS353(B)G2 1/20	28.8(30.8)		HG-SR352(B)G7 1/21	85.1(94.7)	
	HC-RFS353(B)G2 1/29	22.0(24.0)				
	HC-RFS503(B)G2 1/5	32.4(34.4)		HG-SR502(B)G7 1/5	111(121)	
	HC-RFS503(B)G2 1/9	24.5(26.5)		HG-SR502(B)G7 1/11	108(117)	
	HC-RFS503(B)G2 1/20	32.2(34.2)				
Medium capacity, ultra-low inertia HC-RFS series with high precision reducer Flange output type (G5) (B): With brake	HC-RFS103(B)G5 1/5	2.33(2.68)	5 times or less	HG-SR102(B)G5 1/5	12.3(14.5)	10 times or less
	HC-RFS103(B)G5 1/11	2.25(2.60)		HG-SR102(B)G5 1/11	14.9(17.1)	
	HC-RFS103(B)G5 1/21	4.40(4.75)		HG-SR102(B)G5 1/21	14.5(16.7)	
	HC-RFS103(B)G5 1/33	4.20(4.55)		HG-SR102(B)G5 1/33	16.3(18.5)	
	HC-RFS103(B)G5 1/45	6.10(6.45)		HG-SR102(B)G5 1/45	16.2(18.4)	
	HC-RFS153(B)G5 1/5	2.73(3.08)		HG-SR152(B)G5 1/5	16.7(18.9)	
	HC-RFS153(B)G5 1/11	5.20(5.55)		HG-SR152(B)G5 1/11	19.3(21.5)	
	HC-RFS153(B)G5 1/21	4.80(5.15)		HG-SR152(B)G5 1/21	21.7(23.9)	
	HC-RFS153(B)G5 1/33	6.60(6.95)		HG-SR152(B)G5 1/33	20.7(22.9)	
	HC-RFS153(B)G5 1/45	6.50(6.85)		HG-SR152(B)G5 1/45	20.6(22.8)	
	HC-RFS203(B)G5 1/5	3.13(3.48)		HG-SR202(B)G5 1/5	51.4(61.1)	
	HC-RFS203(B)G5 1/11	5.60(5.95)		HG-SR202(B)G5 1/11	51.2(60.9)	
	HC-RFS203(B)G5 1/21	8.00(8.35)		HG-SR202(B)G5 1/21	53.2(62.9)	
	HC-RFS203(B)G5 1/33	7.00(7.35)		HG-SR202(B)G5 1/33	52.2(61.9)	
	HC-RFS203(B)G5 1/45	6.90(7.25)		HG-SR202(B)G5 1/45	52.2(61.9)	
	HC-RFS353(B)G5 1/5	13.5(16.7)		HG-SR352(B)G5 1/5	83.2(92.8)	
	HC-RFS353(B)G5 1/11	13.3(16.5)		HG-SR352(B)G5 1/11	86.7(96.3)	
	HC-RFS353(B)G5 1/21	15.3(18.5)		HG-SR352(B)G5 1/21	85.0(94.6)	
	HC-RFS353(B)G5 1/33	14.4(17.6)				
	HC-RFS503(B)G5 1/5	16.9(20.4)		HG-SR502(B)G5 1/5	110(119)	
	HC-RFS503(B)G5 1/11	20.5(24.0)		HG-SR502(B)G5 1/11	108(117)	
	HC-RFS503(B)G5 1/21	18.7(22.2)				

Note 1. As for the motor specifications not listed here, refer to the catalog or Instruction Manual. ( ): With brake
2. If the load inertia moment ratio with brake is exceeded, please ask the sales contact.

Series	Target product			Replacement product		
	Model	Moment of inertia J × 10^{-4} kg•m^2	Load inertia moment ratio	Model	Moment of inertia J × 10^{-4} kg•m^2	Load inertia moment ratio
Medium capacity, ultra-low inertia HC-RFS series with high precision reducer Shaft output type (G7) (B): With brake	HC-RFS103(B)G7 1/5	2.37(2.72)	5 times or less	HG-SR102(B)G7 1/5	12.3(14.5)	10 times or less
	HC-RFS103(B)G7 1/11	2.25(2.60)		HG-SR102(B)G7 1/11	15.0(17.2)	
	HC-RFS103(B)G7 1/21	4.40(4.75)		HG-SR102(B)G7 1/21	14.5(16.7)	
	HC-RFS103(B)G7 1/33	4.20(4.55)		HG-SR102(B)G7 1/33	16.3(18.5)	
	HC-RFS103(B)G7 1/45	6.20(6.55)		HG-SR102(B)G7 1/45	16.3(18.5)	
	HC-RFS153(B)G7 1/5	2.77(3.12)		HG-SR152(B)G7 1/5	16.7(18.9)	
	HC-RFS153(B)G7 1/11	5.30(5.65)		HG-SR152(B)G7 1/11	19.4(21.6)	
	HC-RFS153(B)G7 1/21	4.80(5.15)		HG-SR152(B)G7 1/21	21.7(23.9)	
	HC-RFS153(B)G7 1/33	6.60(6.95)		HG-SR152(B)G7 1/33	20.7(22.9)	
	HC-RFS153(B)G7 1/45	6.60(6.95)		HG-SR152(B)G7 1/45	20.7(22.9)	
	HC-RFS203(B)G7 1/5	3.17(3.52)		HG-SR202(B)G7 1/5	51.7(61.4)	
	HC-RFS203(B)G7 1/11	5.70(6.05)		HG-SR202(B)G7 1/11	51.3(61.0)	
	HC-RFS203(B)G7 1/21	8.00(8.35)		HG-SR202(B)G7 1/21	53.3(63.0)	
	HC-RFS203(B)G7 1/33	7.00(7.35)		HG-SR202(B)G7 1/33	52.2(61.9)	
	HC-RFS203(B)G7 1/45	7.00(7.35)		HG-SR202(B)G7 1/45	52.2(61.9)	
	HC-RFS353(B)G7 1/5	13.8(17.0)		HG-SR352(B)G7 1/5	83.5(93.1)	
	HC-RFS353(B)G7 1/11	13.4(16.6)		HG-SR352(B)G7 1/11	87.0(96.6)	
	HC-RFS353(B)G7 1/21	15.4(18.6)		HG-SR352(B)G7 1/21	85.1(94.7)	
	HC-RFS353(B)G7 1/33	14.4(17.6)				
	HC-RFS503(B)G7 1/5	17.2(20.7)		HG-SR502(B)G7 1/5	111(121)	
	HC-RFS503(B)G7 1/11	20.7(24.2)		HG-SR502(B)G7 1/11	108(117)	
	HC-RFS503(B)G7 1/21	18.8(22.3)				

Note 1. As for the motor specifications not listed here, refer to the catalog or Instruction Manual. ( ): With brake
2. If the load inertia moment ratio with brake is exceeded, please ask the sales contact.

(5) HC-LFS/-UFS motor

Series	Target product			Replacement product		
	Model	Moment of inertia J × 10^{-4} kg•m^2	Load inertia moment ratio	Model	Moment of inertia J × 10^{-4} kg•m^2	Load inertia moment ratio
Medium capacity, low inertia HC-LFS series (B): With brake	HC-LFS52(B)	3.2(5.2)	10 times or less	HG-JR73(B)	2.09(2.59)	10 times or less
	HC-LFS102(B)	4.6(6.6)		HG-JR153(B)	3.79(4.29)	
	HC-LFS152(B)	6.4(8.4)		HG-JR353(B)	13.2(15.4)	
	HC-LFS202(B)	22(32)				
	HC-LFS302(B)	36(46)		HG-JR503(B)	19.0(21.2)	
Small capacity, flat type HC-UFS series (B): With brake	HC-UFS13(B)	0.066(0.074)	15 times or less	HG-KR13(B)	0.0777(0.0837)	17 times or less
	HC-UFS23(B)	0.241(0.323)		HG-KR23(B)	0.221(0.243)	26 times or less
	HC-UFS43(B)	0.365(0.447)		HG-KR43(B)	0.371(0.393)	25 times or less
	HC-UFS73(B)	5.90(6.10)		HG-KR73(B)	1.26(1.37)	17 times or less
Medium capacity, flat type HC-UFS series (B): With brake	HC-UFS72(B)	10.4(12.4)		HG-UR72(B)	10.4(12.5)	15 times or less
	HC-UFS152(B)	22.1(24.1)		HG-UR152(B)	22.1(24.2)	
	HC-UFS202(B)	38.2(46.8)		HG-UR202(B)	38.2(46.8)	
	HC-UFS352(B)	76.5(85.1)		HG-UR352(B)	76.5(85.1)	
	HC-UFS502(B)	115(123.6)		HG-UR502(B)	115(124)	

Note 1. As for the motor specifications not listed here, refer to the catalog or Instruction Manual. ( ): With brake
2. If the load inertia moment ratio with brake is exceeded, please ask the sales contact.

(6) HA-LFS motor

Series	Target product			Replacement product		
	Model	Moment of inertia J × 10^{-4} kg•m^2	Load inertia moment ratio	Model	Moment of inertia J × 10^{-4} kg•m^2	Load inertia moment ratio
Large capacity, low inertia HA-LFS 1000 r/min series (B): With brake	HA-LFS601(B) HA-LFS6014(B)	105(113)	10 times or less	HG-JR601(B) HG-JR6014(B)	176(196)	10 times or less
	HA-LFS801(B) HA-LFS8014(B)	220(293)		HG-JR801(B) HG-JR8014(B)	220(240)	
	HA-LFS12K1(B) HA-LFS12K14(B)	295(369)		HG-JR12K1(B) HG-JR12K14(B)	315(336)	
	HA-LFS15K1 HA-LFS15K14	550		HG-JR15K1 HG-JR15K14	489	
	HA-LFS20K1 HA-LFS20K14	650		HG-JR20K1 HG-JR20K14	627	
	HA-LFS25K1 HA-LFS25K14	1080		HG-JR25K1 HG-JR25K14	764	
	HA-LFS30K1 HA-LFS30K14	1310		HG-JR30K1 HG-JR30K14	1377	
	HA-LFS37K1 HA-LFS37K14	1870		HG-JR37K1 HG-JR37K14	1637	
Large capacity, low inertia HA-LFS 1500 r/min series (B): With brake	HA-LFS701M(B) HA-LFS701M4(B)	105(113)		HG-JR701M(B) HG-JR701M4(B)	176(196)	
	HA-LFS11K1M(B) HA-LFS11K1M4(B)	220(293)		HG-JR11K1M(B) HG-JR11K1M4(B)	220(240)	
	HA-LFS15K1M(B) HA-LFS15K1M4(B)	295(369)		HG-JR15K1M(B) HG-JR15K1M4(B)	315(336)	
	HA-LFS22K1M HA-LFS22K1M4	550		HG-JR22K1M HG-JR22K1M4	489	
	HA-LFS30K1M HA-LFS30K1M4	650		HG-JR30K1M HG-JR30K1M4	627	
	HA-LFS37K1M HA-LFS37K1M4	1080		HG-JR37K1M HG-JR37K1M4	764	
	HA-LFS45K1M4	1310		HG-JR45K1M4	1377	
	HA-LFS50K1M4	1870		HG-JR55K1M4	1637	
Large capacity, low inertia HA-LFS 2000 r/min series (B): With brake	HA-LFS502	74.0		HG-SR502	99.7	15 times or less
	HA-LFS702	94.2		HG-SR702	151	
	HA-LFS11K2(B) HA-LFS11K24(B)	105(113)		HG-JR11K1M(B) HG-JR11K1M4(B)	220(240)	10 times or less
	HA-LFS15K2(B) HA-LFS15K24(B)	220(293)				
	HA-LFS22K2(B) HA-LFS22K24(B)	295(369)		HG-JR15K1M(B) HG-JR15K1M4(B)	315(336)	
	HA-LFS30K2 HA-LFS30K24	550		HG-JR22K1M HG-JR22K1M4	489	
	HA-LFS37K2 HA-LFS37K24	650		HG-JR30K1M HG-JR30K1M4	627	
	HA-LFS45K24	1080		HG-JR37K1M4	764	
	HA-LFS55K24	1310		HG-JR45K1M4	1377	

Note 1. As for the motor specifications not listed here, refer to the catalog or Instruction Manual. ( ): With brake
2. If the load inertia moment ratio with brake is exceeded, please ask the sales contact.

Series	Target product			Replacement product		
	Model	Moment of inertia J × 10^{-4} kg•m^2	Load moment inertia ratio	Model	Moment of inertia J × 10^{-4} kg•m^2	Load moment inertia ratio
Large capacity, low inertia HA-LFS 1000 r/min series (B): With brake	HA-LFS601(B) HA-LFS6014(B)	105(113)	10 times or less	HG-JR601R(B)-S_ HG-JR6014R(B) -S_	198(218)	10 times or less
	HA-LFS801(B) HA-LFS8014(B)	220(293)		HG-JR801R(B)-S_ HG-JR8014R(B)-S_	228(248)	
	HA-LFS12K1(B) HA-LFS12K14(B)	295(369)		HG-JR12K1R(B)-S_ HG-JR12K14R(B)-S_	323(344)	
	HA-LFS15K1 HA-LFS15K14	550		HG-JR15K1R-S_ HG-JR15K14R-S_	487	
	HA-LFS20K1 HA-LFS20K14	650		HG-JR20K1R-S_ HG-JR20K14R-S_	625	
	HA-LFS25K1 HA-LFS25K14	1080		HG-JR25K1R-S_ HG-JR25K14R-S_	767	
	HA-LFS30K1 HA-LFS30K14	1310		HG-JR30K1R-S_ HG-JR30K14R-S_	1356	
	HA-LFS37K1 HA-LFS37K14	1870		HG-JR37K1R-S_ HG-JR37K14R-S_	1650	
Large capacity, low inertia HA-LFS 1500 r/min series (B): With brake	HA-LFS701M(B) HA-LFS701M4(B)	105(113)		HG-JR701MR(B)-S_ HG-JR701M4R(B)-S_	198(218)	
	HA-LFS11K1M(B) HA-LFS11K1M4(B)	220(293)		HG-JR11K1MR(B)-S_(□250) HG-JR11K1M4R(B)-S_(□250)	228(248)	
	HA-LFS15K1M(B) HA-LFS15K1M4(B)	295(369)		HG-JR15K1MR(B)-S_ HG-JR15K1M4R(B)-S_	323(344)	
	HA-LFS22K1M HA-LFS22K1M4	550		HG-JR22K1MR-S_ HG-JR22K1M4R-S_	487	
	HA-LFS30K1M HA-LFS30K1M4	650		HG-JR30K1MR-S_ HG-JR30K1M4R-S_	625	
	HA-LFS37K1M HA-LFS37K1M4	1080		HG-JR37K1MR-S_ HG-JR37K1M4R-S_	767	
	HA-LFS45K1M4	1310		HG-JR45K1M4R-S_	1356	
	HA-LFS50K1M4	1870		HG-JR55K1M4R-S_	1651	
Large capacity, low inertia HA-LFS 2000 r/min series (B): With brake	HA-LFS502	74.0		HG-SR502R-S_	104	15 times or less
	HA-LFS702	94.2		HG-SR702R-S_	155	
	HA-LFS11K2(B) HA-LFS11K24(B)	105(113)		HG-JR11K1MR(B)-S_(□200) HG-JR11K1M4R(B)-S_(□200)	236(256)	10 times or less
	HA-LFS15K2(B) HA-LFS15K24(B)	220(293)		HG-JR11K1MR(B)-S_(□250) HG-JR11K1M4R(B)-S_(□250)	228(248)	
	HA-LFS22K2(B) HA-LFS22K24(B)	295(369)		HG-JR15K1MR(B)-S_ HG-JR15K1M4R(B)-S_	323(344)	
	HA-LFS30K2 HA-LFS30K24	550		HG-JR22K1MR-S_ HG-JR22K1M4R-S_	487	
	HA-LFS37K2 HA-LFS37K24	650		HG-JR30K1MR-S_ HG-JR30K1M4R-S_	625	
	HA-LFS45K24	1080		HG-JR37K1M4R-S_	767	
	HA-LFS55K24	1310		HG-JR45K1M4R-S_	1356	

Note 1. As for the motor specifications not listed here, refer to the catalog or Instruction Manual. ( ): With brake
2. If the load moment inertia ratio with brake is exceeded, please ask the sales contact.

2.6 Comparison of Servo Motor Connector Specifications

(1) HC-KFS/-MFS/-UFS motor

	MR-J2S series (HC-KFS/MFS/UFS)	MR-J4 series (HG-KR/MR)
Motor appearance	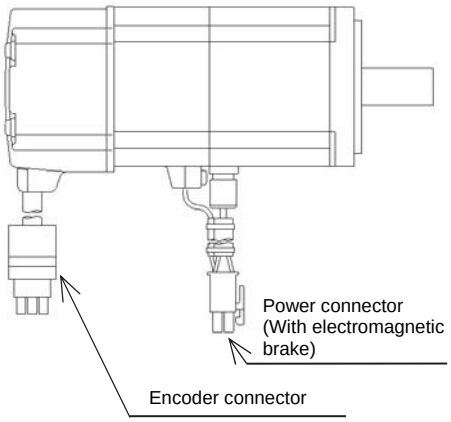	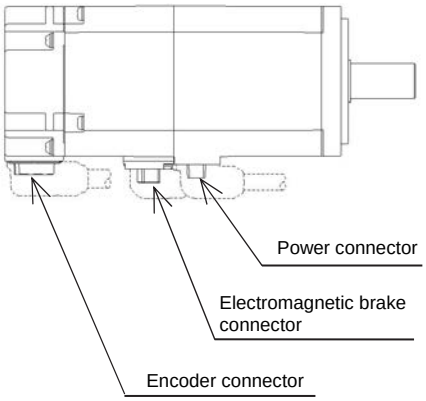
Power connector	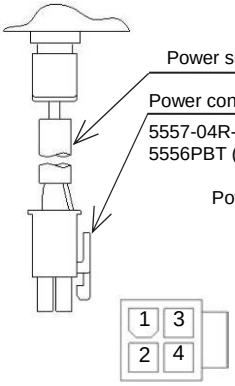 Power connector Pin assignment Pin number / Signal name 1 / U 2 / V 3 / W 4 / Earth	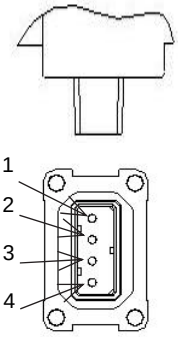 Power connector Pin assignment Pin number / Signal name 1 / Earth 2 / U 3 / V 4 / W
Encoder connector	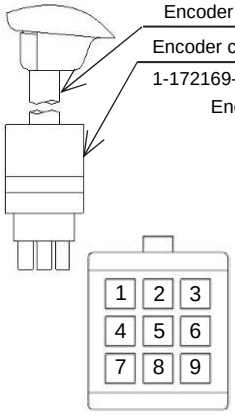 Encoder connector Pin assignment Pin number / Signal name 1 / MR 2 / MRR 3 / BAT 4 / MD 5 / MDR 6 / 7 / P5 8 / LG 9 / SHD	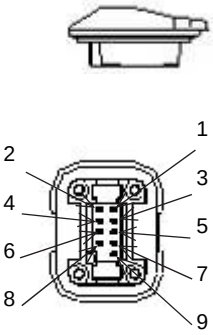 Encoder connector Pin assignment Pin number / Signal name 1 / 2 / BAT 3 / P5 4 / MRR 5 / MR 6 / LG 7 / 8 / 9 / SHD
Electromagnetic brake connector (Power connector)	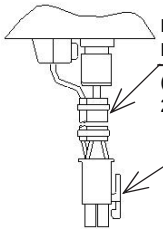 Power connector (with brake) Pin assignment Pin number / Signal name 1 / U 2 / V 3 / W 4 / Earth 5 / B1 6 / B2 	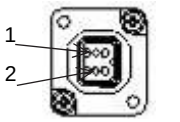 Electromagnetic brake connector Pin assignment Pin number / Signal name 1 / B1 2 / B2

(2) HC-SFS motor

<table>
<tr><td>Motor appearance</td><td>MR-J2S series (HC-SFS)
Target models: HC-SFS81(B)
HC-SFS52(4)(B) to HC-SFS152(4)(B)
HC-SFS53(B) to HC-SFS153(B)
 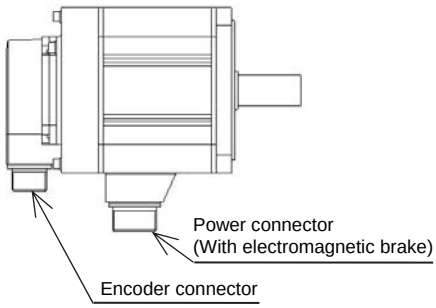
</td><td>MR-J4 series (HG-SR)
Target models: HG-SR81(B)
HG-SR52(4)(B) to HG-SR152(4)(B)
 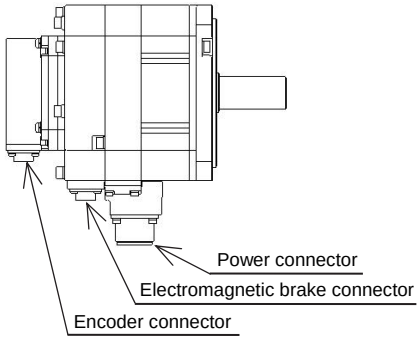
</td></tr>
<tr><td>Power connector</td><td> 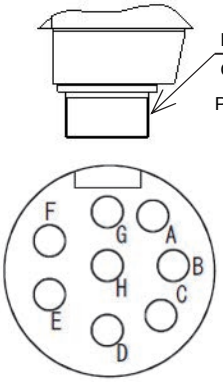

Power connector
Pin assignment
<table><tr><th>Pin number</th><th>Signal name</th></tr><tr><td>A</td><td>U</td></tr><tr><td>B</td><td>V</td></tr><tr><td>C</td><td>W</td></tr><tr><td>D</td><td>Earth</td></tr><tr><td>E</td><td></td></tr><tr><td>F</td><td></td></tr><tr><td>G</td><td></td></tr><tr><td>H</td><td></td></tr></table></td><td> 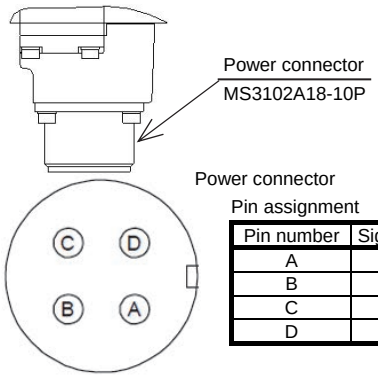

Power connector
Pin assignment
<table><tr><th>Pin number</th><th>Signal name</th></tr><tr><td>A</td><td>U</td></tr><tr><td>B</td><td>V</td></tr><tr><td>C</td><td>W</td></tr><tr><td>D</td><td>Earth</td></tr></table></td></tr>
<tr><td>Encoder connector</td><td> 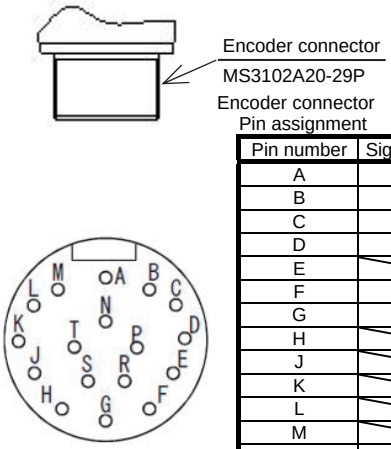

Encoder connector
Pin assignment
<table><tr><th>Pin number</th><th>Signal name</th></tr><tr><td>A</td><td>MD</td></tr><tr><td>B</td><td>MDR</td></tr><tr><td>C</td><td>MR</td></tr><tr><td>D</td><td>MRR</td></tr><tr><td>E</td><td></td></tr><tr><td>F</td><td>BAT</td></tr><tr><td>G</td><td>LG</td></tr><tr><td>H</td><td></td></tr><tr><td>J</td><td></td></tr><tr><td>K</td><td></td></tr><tr><td>L</td><td></td></tr><tr><td>M</td><td></td></tr><tr><td>N</td><td>SHD</td></tr><tr><td>P</td><td></td></tr><tr><td>R</td><td>LG</td></tr><tr><td>S</td><td>P5</td></tr><tr><td>T</td><td></td></tr></table></td><td> 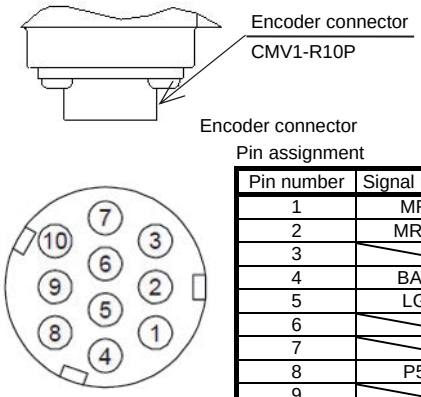

Encoder connector
Pin assignment
<table><tr><th>Pin number</th><th>Signal name</th></tr><tr><td>1</td><td>MR</td></tr><tr><td>2</td><td>MRR</td></tr><tr><td>3</td><td></td></tr><tr><td>4</td><td>BAT</td></tr><tr><td>5</td><td>LG</td></tr><tr><td>6</td><td></td></tr><tr><td>7</td><td></td></tr><tr><td>8</td><td>P5</td></tr><tr><td>9</td><td></td></tr><tr><td>10</td><td>SHD</td></tr></table></td></tr>
<tr><td>Electromagnetic brake connector
(Power connector)</td><td> 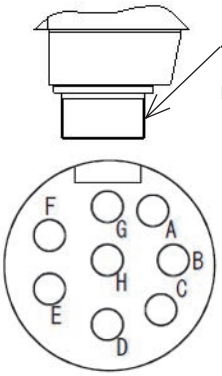

Power connector (with brake)
Pin assignment
<table><tr><th>Pin number</th><th>Signal name</th></tr><tr><td>A</td><td>U</td></tr><tr><td>B</td><td>V</td></tr><tr><td>C</td><td>W</td></tr><tr><td>D</td><td>Earth</td></tr><tr><td>E</td><td></td></tr><tr><td>F</td><td></td></tr><tr><td>G</td><td>B1</td></tr><tr><td>H</td><td>B2</td></tr></table></td><td> 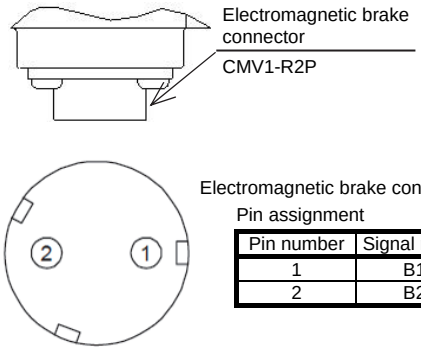

Electromagnetic brake connector
Pin assignment
<table><tr><th>Pin number</th><th>Signal name</th></tr><tr><td>1</td><td>B1</td></tr><tr><td>2</td><td>B2</td></tr></table></td></tr>
</table>

<table>
<tr><td>Motor appearance</td><td>MR-J2S series (HC-SFS)
Target models: HC-SFS121(B) to HC-SFS301(B)
HC-SFS202(4)(B) to HC-SFS702(4)(B)
HC-SFS203(B), HC-SFS353(B)
 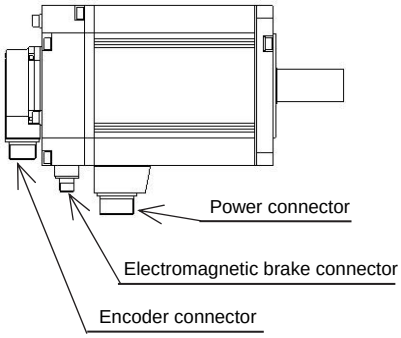
</td><td>MR-J4 series (HG-SR)
Target models: HG-SR121(B) to HG-SR301(B)
HG-SR202(4)(B) to HG-SR702(4)(B)
 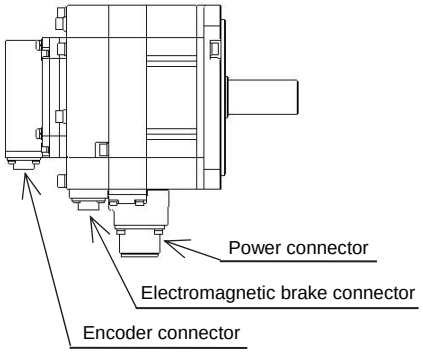
</td></tr>
<tr><td>Power connector</td><td> 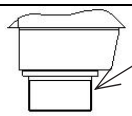
Power connector
CE05-2A24-10P (5 kW or less)
CE05-2A32-17P (7 kW)
CE05-2A24-10P
 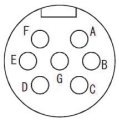

CE05-2A32-17P
 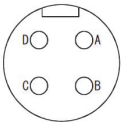

Power connector
Pin assignment
<table><tr><th>Pin number</th><th>Signal name</th></tr><tr><td>A</td><td>U</td></tr><tr><td>B</td><td>V</td></tr><tr><td>C</td><td>W</td></tr><tr><td>D</td><td>Earth</td></tr><tr><td>E</td><td></td></tr><tr><td>F</td><td></td></tr><tr><td>G</td><td></td></tr></table></td><td> 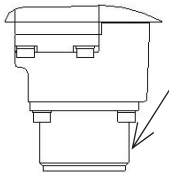
Power connector
MS3102A22-22P (5 kW or less)
MS3102A32-17P (7 kW)
 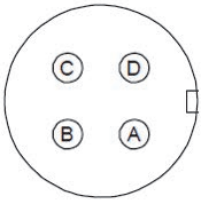

Power connector
Pin assignment
<table><tr><th>Pin number</th><th>Signal name</th></tr><tr><td>A</td><td>U</td></tr><tr><td>B</td><td>V</td></tr><tr><td>C</td><td>W</td></tr><tr><td>D</td><td>Earth</td></tr></table></td></tr>
<tr><td>Encoder connector</td><td> 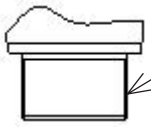
Encoder connector
MS3102A20-29P
Encoder connector
Pin assignment
<table><tr><th>Pin number</th><th>Signal name</th></tr><tr><td>A</td><td>MD</td></tr><tr><td>B</td><td>MDR</td></tr><tr><td>C</td><td>MR</td></tr><tr><td>D</td><td>MRR</td></tr><tr><td>E</td><td></td></tr><tr><td>F</td><td>BAT</td></tr><tr><td>G</td><td>LG</td></tr><tr><td>H</td><td></td></tr><tr><td>J</td><td></td></tr><tr><td>K</td><td></td></tr><tr><td>L</td><td></td></tr><tr><td>M</td><td></td></tr><tr><td>N</td><td>SHD</td></tr><tr><td>P</td><td></td></tr><tr><td>R</td><td>LG</td></tr><tr><td>S</td><td>P5</td></tr><tr><td>T</td><td></td></tr></table>
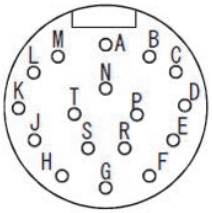
</td><td> 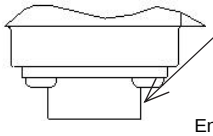
Encoder connector
CMV1-R10P
Encoder connector
Pin assignment
<table><tr><th>Pin number</th><th>Signal name</th></tr><tr><td>1</td><td>MR</td></tr><tr><td>2</td><td>MRR</td></tr><tr><td>3</td><td></td></tr><tr><td>4</td><td>BAT</td></tr><tr><td>5</td><td>LG</td></tr><tr><td>6</td><td></td></tr><tr><td>7</td><td></td></tr><tr><td>8</td><td>P5</td></tr><tr><td>9</td><td></td></tr><tr><td>10</td><td>SHD</td></tr></table>
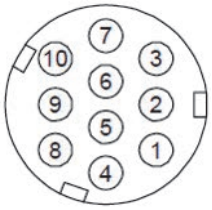
</td></tr>
<tr><td>Electromagnetic brake connector</td><td> 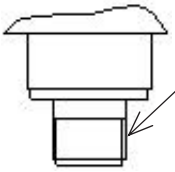
Electromagnetic brake connector
MS3102A10SL-4P
 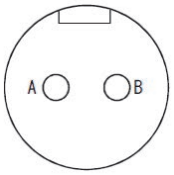

Electromagnetic brake connector
Pin assignment
<table><tr><th>Pin number</th><th>Signal name</th></tr><tr><td>A</td><td>B1</td></tr><tr><td>B</td><td>B2</td></tr></table></td><td> 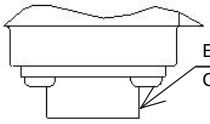
Electromagnetic brake connector
CMV1-R2P
 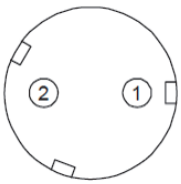

Electromagnetic brake connector
Pin assignment
<table><tr><th>Pin number</th><th>Signal name</th></tr><tr><td>1</td><td>B1</td></tr><tr><td>2</td><td>B2</td></tr></table></td></tr>
</table>

(3) HC-RFS motor

	MR-J2S series (HC-RFS) Target models: HC-RFS103(B), RFS153(B),RFS203(B)	MR-J4 series (HG-RR) Target model: HG-RR103(B), RR153(B), RR203(B)
Motor appearance	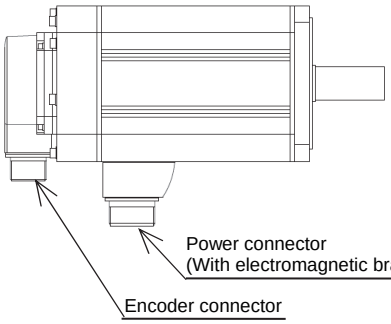	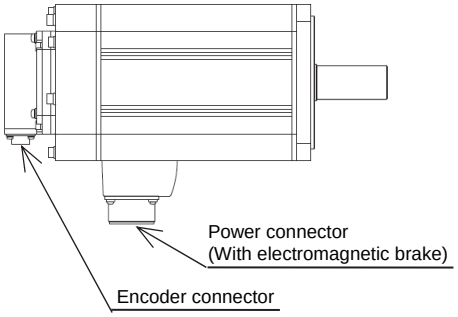
Power connector	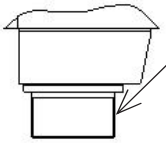 Power connector Pin assignment 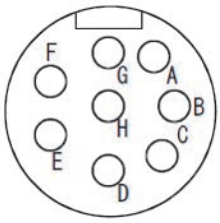 Pin number / Signal name: A: U B: V C: W D: Earth E: F: G: H:	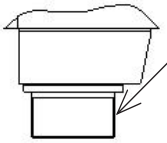 Power connector Pin assignment 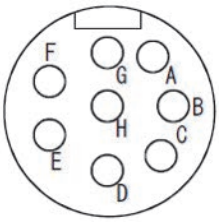 Pin number / Signal name: A: U B: V C: W D: Earth E: F: G: H:
Encoder connector	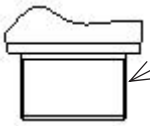 Encoder connector Pin assignment 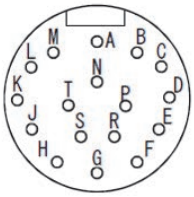 Pin number / Signal name: A: MD B: MDR C: MR D: MRR E: F: BAT G: LG H: J: K: L: M: N: SHD P: R: LG S: P5 T:	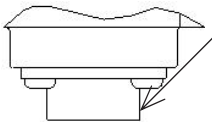 Encoder connector Pin assignment 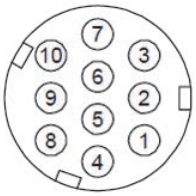 Pin number / Signal name: 1: MR 2: MRR 3: 4: BAT 5: LG 6: 7: 8: P5 9: 10: SHD
Electromagnetic brake connector (Power connector)	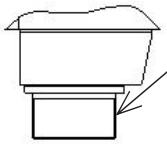 Power connector (with brake) Pin assignment 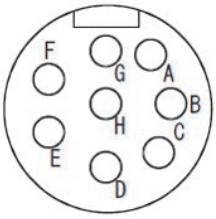 Pin number / Signal name: A: U B: V C: W D: Earth E: F: G: B1 H: B2	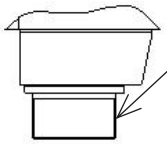 Power connector (with brake) Pin assignment 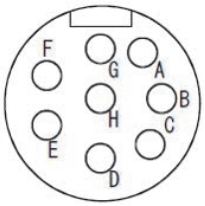 Pin number / Signal name: A: U B: V C: W D: Earth E: F: G: B1 H: B2

<table>
<tr><td>Motor appearance</td><td>MR-J2S series (HC-RFS)
Target models: HC-RFS353(B), RFS503(B)
 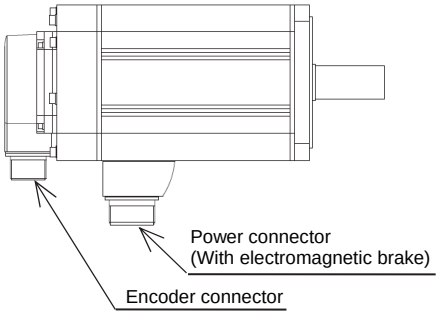
</td><td>MR-J4 series (HG-RR)
Target models: HG-RR353(B), RR503(B)
 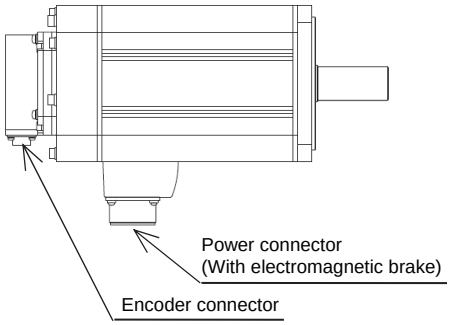
</td></tr>
<tr><td>Power connector</td><td> 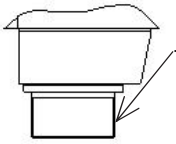
Power connector
CE05-2A24-10P
Power connector
Pin assignment
 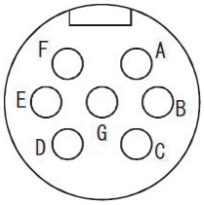

<table>
<tr><th>Pin number</th><th>Signal name</th></tr>
<tr><td>A</td><td>U</td></tr>
<tr><td>B</td><td>V</td></tr>
<tr><td>C</td><td>W</td></tr>
<tr><td>D</td><td>Earth</td></tr>
<tr><td>E</td><td></td></tr>
<tr><td>F</td><td></td></tr>
<tr><td>G</td><td></td></tr>
</table></td><td>
Power connector
CE05-2A24-10P
Power connector
Pin assignment
 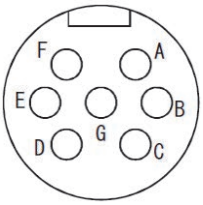

<table>
<tr><th>Pin number</th><th>Signal name</th></tr>
<tr><td>A</td><td>U</td></tr>
<tr><td>B</td><td>V</td></tr>
<tr><td>C</td><td>W</td></tr>
<tr><td>D</td><td>Earth</td></tr>
<tr><td>E</td><td></td></tr>
<tr><td>F</td><td></td></tr>
<tr><td>G</td><td></td></tr>
</table></td></tr>
<tr><td>Encoder connector</td><td> 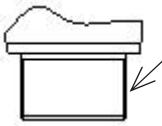
Encoder connector
MS3102A20-29P
Encoder connector
Pin assignment
 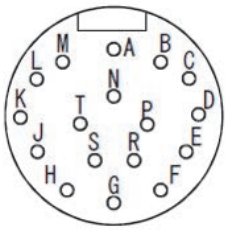

<table>
<tr><th>Pin number</th><th>Signal name</th></tr>
<tr><td>A</td><td>MD</td></tr>
<tr><td>B</td><td>MDR</td></tr>
<tr><td>C</td><td>MR</td></tr>
<tr><td>D</td><td>MRR</td></tr>
<tr><td>E</td><td></td></tr>
<tr><td>F</td><td>BAT</td></tr>
<tr><td>G</td><td>LG</td></tr>
<tr><td>H</td><td></td></tr>
<tr><td>J</td><td></td></tr>
<tr><td>K</td><td></td></tr>
<tr><td>L</td><td></td></tr>
<tr><td>M</td><td></td></tr>
<tr><td>N</td><td>SHD</td></tr>
<tr><td>P</td><td></td></tr>
<tr><td>R</td><td>LG</td></tr>
<tr><td>S</td><td>P5</td></tr>
<tr><td>T</td><td></td></tr>
</table></td><td> 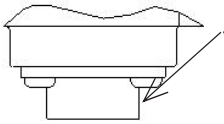
Encoder connector
CMV1-R10P
Encoder connector
Pin assignment
 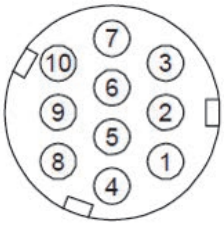

<table>
<tr><th>Pin number</th><th>Signal name</th></tr>
<tr><td>1</td><td>MR</td></tr>
<tr><td>2</td><td>MRR</td></tr>
<tr><td>3</td><td></td></tr>
<tr><td>4</td><td>BAT</td></tr>
<tr><td>5</td><td>LG</td></tr>
<tr><td>6</td><td></td></tr>
<tr><td>7</td><td></td></tr>
<tr><td>8</td><td>P5</td></tr>
<tr><td>9</td><td></td></tr>
<tr><td>10</td><td>SHD</td></tr>
</table></td></tr>
<tr><td>Electromagnetic brake connector
(Power connector)</td><td> 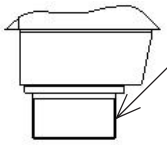
Power connector
CE05-2A24-10P
Power connector (with brake)
Pin assignment
 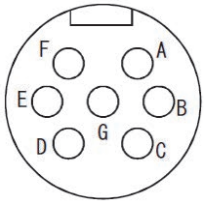

<table>
<tr><th>Pin number</th><th>Signal name</th></tr>
<tr><td>A</td><td>U</td></tr>
<tr><td>B</td><td>V</td></tr>
<tr><td>C</td><td>W</td></tr>
<tr><td>D</td><td>Earth</td></tr>
<tr><td>E</td><td>B1</td></tr>
<tr><td>F</td><td>B2</td></tr>
<tr><td>G</td><td></td></tr>
</table></td><td> 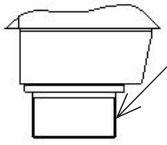
Power connector
CE05-2A24-10P
Power connector (with brake)
Pin assignment
 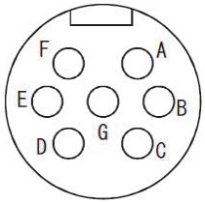

<table>
<tr><th>Pin number</th><th>Signal name</th></tr>
<tr><td>A</td><td>U</td></tr>
<tr><td>B</td><td>V</td></tr>
<tr><td>C</td><td>W</td></tr>
<tr><td>D</td><td>Earth</td></tr>
<tr><td>E</td><td>B1</td></tr>
<tr><td>F</td><td>B2</td></tr>
<tr><td>G</td><td></td></tr>
</table></td></tr>
</table>

(4) HC-LFS motor

<table>
<tr><td>Motor appearance</td><td>MR-J2S series (HC-LFS)
Target models: HC-LFS52(B), LFS102(B)
 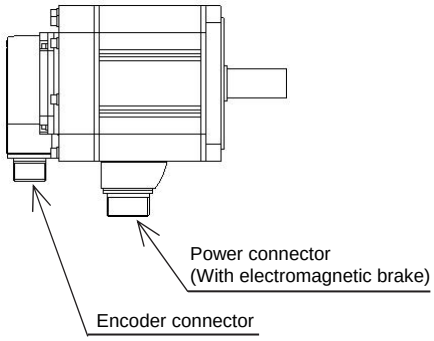
</td><td>MR-J4 series (HG-JR)
Target models: HG-JR73(B), JR153(B)
 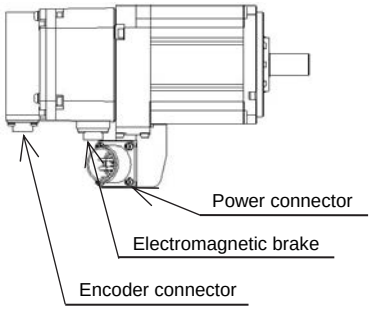
</td></tr>
<tr><td>Power connector</td><td>
Power connector
CE05-2A22-23P
Power connector
Pin assignment
 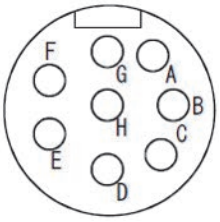

<table>
<tr><th>Pin number</th><th>Signal name</th></tr>
<tr><td>A</td><td>U</td></tr>
<tr><td>B</td><td>V</td></tr>
<tr><td>C</td><td>W</td></tr>
<tr><td>D</td><td>Earth</td></tr>
<tr><td>E</td><td></td></tr>
<tr><td>F</td><td></td></tr>
<tr><td>G</td><td></td></tr>
<tr><td>H</td><td></td></tr>
</table></td><td> 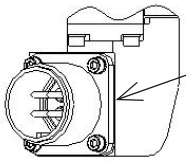
Power connector
MS3102A18-10P
Power connector
Pin assignment
 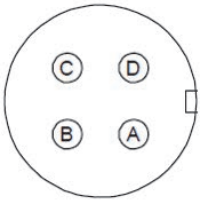

<table>
<tr><th>Pin number</th><th>Signal name</th></tr>
<tr><td>A</td><td>U</td></tr>
<tr><td>B</td><td>V</td></tr>
<tr><td>C</td><td>W</td></tr>
<tr><td>D</td><td>Earth</td></tr>
</table></td></tr>
<tr><td>Encoder connector</td><td> 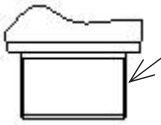
Encoder connector
MS3102A20-29P
Encoder connector
Pin assignment
 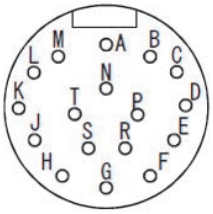

<table>
<tr><th>Pin number</th><th>Signal name</th></tr>
<tr><td>A</td><td>MD</td></tr>
<tr><td>B</td><td>MDR</td></tr>
<tr><td>C</td><td>MR</td></tr>
<tr><td>D</td><td>MRR</td></tr>
<tr><td>E</td><td></td></tr>
<tr><td>F</td><td>BAT</td></tr>
<tr><td>G</td><td>LG</td></tr>
<tr><td>H</td><td></td></tr>
<tr><td>J</td><td></td></tr>
<tr><td>K</td><td></td></tr>
<tr><td>L</td><td></td></tr>
<tr><td>M</td><td></td></tr>
<tr><td>N</td><td>SHD</td></tr>
<tr><td>P</td><td></td></tr>
<tr><td>R</td><td>LG</td></tr>
<tr><td>S</td><td>P5</td></tr>
<tr><td>T</td><td></td></tr>
</table></td><td> 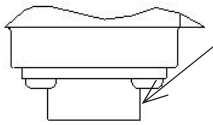
Encoder connector
CMV1-R10P
Encoder connector
Pin assignment
 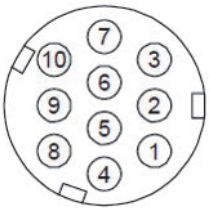

<table>
<tr><th>Pin number</th><th>Signal name</th></tr>
<tr><td>1</td><td>MR</td></tr>
<tr><td>2</td><td>MRR</td></tr>
<tr><td>3</td><td></td></tr>
<tr><td>4</td><td>BAT</td></tr>
<tr><td>5</td><td>LG</td></tr>
<tr><td>6</td><td></td></tr>
<tr><td>7</td><td></td></tr>
<tr><td>8</td><td>P5</td></tr>
<tr><td>9</td><td></td></tr>
<tr><td>10</td><td>SHD</td></tr>
</table></td></tr>
<tr><td>Electromagnetic brake connector
(Power connector)</td><td>
Power connector
CE05-2A22-23P
Power connector (with brake)
Pin assignment
 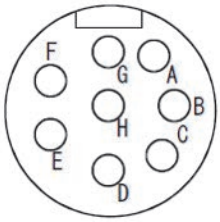

<table>
<tr><th>Pin number</th><th>Signal name</th></tr>
<tr><td>A</td><td>U</td></tr>
<tr><td>B</td><td>V</td></tr>
<tr><td>C</td><td>W</td></tr>
<tr><td>D</td><td>Earth</td></tr>
<tr><td>E</td><td></td></tr>
<tr><td>F</td><td></td></tr>
<tr><td>G</td><td>B1</td></tr>
<tr><td>H</td><td>B2</td></tr>
</table></td><td> 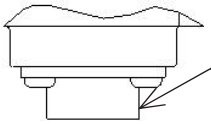
Electromagnetic brake connector
CMV1-R2P
 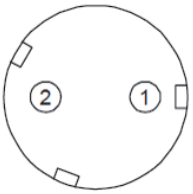

Electromagnetic brake connector
Pin assignment
<table>
<tr><th>Pin number</th><th>Signal name</th></tr>
<tr><td>1</td><td>B1</td></tr>
<tr><td>2</td><td>B2</td></tr>
</table></td></tr>
</table>

<table>
<tr><td>Motor appearance</td><td>MR-J2S series (HC-LFS)
Target models: HC-LFS152(B)
 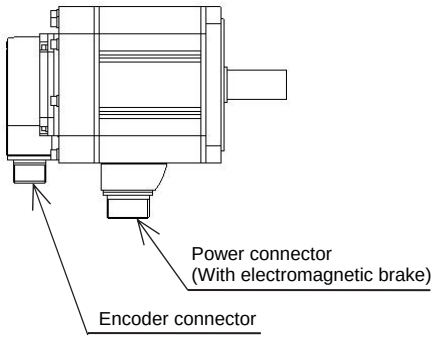
</td><td>MR-J4 series (HG-JR)
Target models: HG-JR353(B)
 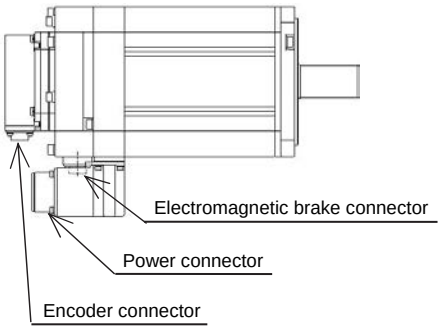
</td></tr>
<tr><td>Power connector</td><td>
Power connector
CE05-2A22-23P
Power connector
Pin assignment
 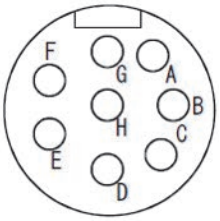

<table>
<tr><th>Pin number</th><th>Signal name</th></tr>
<tr><td>A</td><td>U</td></tr>
<tr><td>B</td><td>V</td></tr>
<tr><td>C</td><td>W</td></tr>
<tr><td>D</td><td>Earth</td></tr>
<tr><td>E</td><td></td></tr>
<tr><td>F</td><td></td></tr>
<tr><td>G</td><td></td></tr>
<tr><td>H</td><td></td></tr>
</table></td><td> 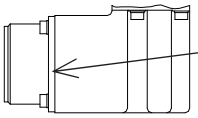
Power connector
MS3102A22-22P
 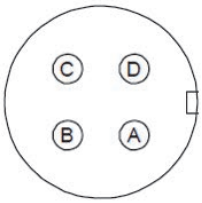

Power connector
Pin assignment
<table>
<tr><th>Pin number</th><th>Signal name</th></tr>
<tr><td>A</td><td>U</td></tr>
<tr><td>B</td><td>V</td></tr>
<tr><td>C</td><td>W</td></tr>
<tr><td>D</td><td>Earth</td></tr>
</table></td></tr>
<tr><td>Encoder connector</td><td> 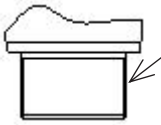
Encoder connector
MS3102A20-29P
Encoder connector
Pin assignment
 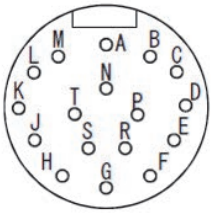

<table>
<tr><th>Pin number</th><th>Signal name</th></tr>
<tr><td>A</td><td>MD</td></tr>
<tr><td>B</td><td>MDR</td></tr>
<tr><td>C</td><td>MR</td></tr>
<tr><td>D</td><td>MRR</td></tr>
<tr><td>E</td><td></td></tr>
<tr><td>F</td><td>BAT</td></tr>
<tr><td>G</td><td>LG</td></tr>
<tr><td>H</td><td></td></tr>
<tr><td>J</td><td></td></tr>
<tr><td>K</td><td></td></tr>
<tr><td>L</td><td></td></tr>
<tr><td>M</td><td></td></tr>
<tr><td>N</td><td>SHD</td></tr>
<tr><td>P</td><td></td></tr>
<tr><td>R</td><td>LG</td></tr>
<tr><td>S</td><td>P5</td></tr>
<tr><td>T</td><td></td></tr>
</table></td><td> 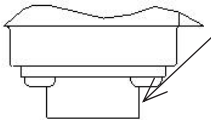
Encoder connector
CMV1-R10P
Encoder connector
Pin assignment
 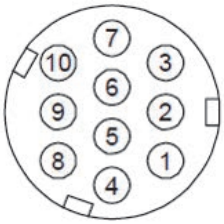

<table>
<tr><th>Pin number</th><th>Signal name</th></tr>
<tr><td>1</td><td>MR</td></tr>
<tr><td>2</td><td>MRR</td></tr>
<tr><td>3</td><td></td></tr>
<tr><td>4</td><td>BAT</td></tr>
<tr><td>5</td><td>LG</td></tr>
<tr><td>6</td><td></td></tr>
<tr><td>7</td><td></td></tr>
<tr><td>8</td><td>P5</td></tr>
<tr><td>9</td><td></td></tr>
<tr><td>10</td><td>SHD</td></tr>
</table></td></tr>
<tr><td>Electromagnetic brake connector
(Power connector)</td><td>
Power connector
CE05-2A22-23P
Power connector (with brake)
Pin assignment
 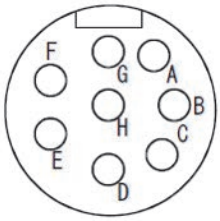

<table>
<tr><th>Pin number</th><th>Signal name</th></tr>
<tr><td>A</td><td>U</td></tr>
<tr><td>B</td><td>V</td></tr>
<tr><td>C</td><td>W</td></tr>
<tr><td>D</td><td>Earth</td></tr>
<tr><td>E</td><td></td></tr>
<tr><td>F</td><td></td></tr>
<tr><td>G</td><td>B1</td></tr>
<tr><td>H</td><td>B2</td></tr>
</table></td><td> 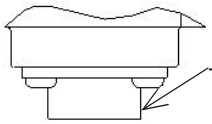
Electromagnetic brake connector
CMV1-R2P
Electromagnetic brake connector
Pin assignment
 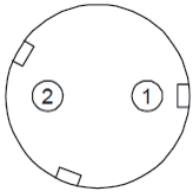

<table>
<tr><th>Pin number</th><th>Signal name</th></tr>
<tr><td>1</td><td>B1</td></tr>
<tr><td>2</td><td>B2</td></tr>
</table></td></tr>
</table>

<table>
<tr><td>Motor appearance</td><td>MR-J2S series (HC-LFS)
Target models: HC-LFS202(B), LFS302(B)
 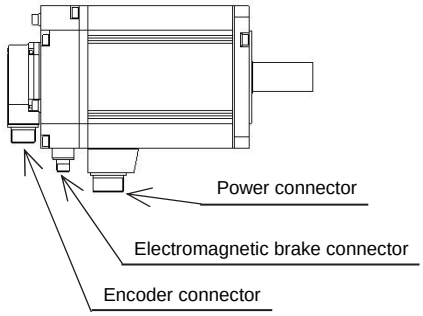
</td><td>MR-J4 series (HG-JR)
Target models: HG-JR353(B), JR503(B)
 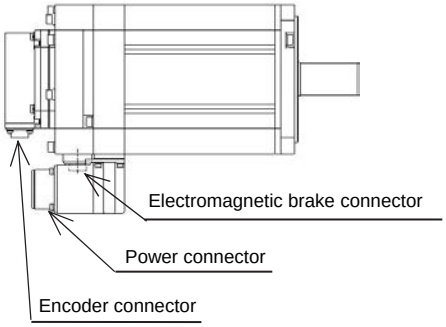
</td></tr>
<tr><td>Power connector</td><td> 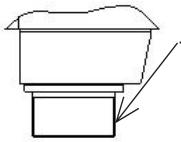
Power connector
CE05-2A24-10P
Power connector
Pin assignment
 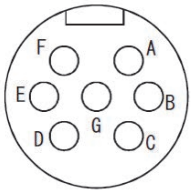

<table>
<tr><th>Pin number</th><th>Signal name</th></tr>
<tr><td>A</td><td>U</td></tr>
<tr><td>B</td><td>V</td></tr>
<tr><td>C</td><td>W</td></tr>
<tr><td>D</td><td>Earth</td></tr>
<tr><td>E</td><td></td></tr>
<tr><td>F</td><td></td></tr>
<tr><td>G</td><td></td></tr>
</table></td><td> 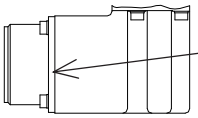
Power connector
MS3102A22-22P
 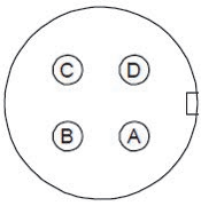

Power connector
Pin assignment
<table>
<tr><th>Pin number</th><th>Signal name</th></tr>
<tr><td>A</td><td>U</td></tr>
<tr><td>B</td><td>V</td></tr>
<tr><td>C</td><td>W</td></tr>
<tr><td>D</td><td>Earth</td></tr>
</table></td></tr>
<tr><td>Encoder connector</td><td> 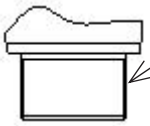
Encoder connector
MS3102A20-29P
Encoder connector
Pin assignment
 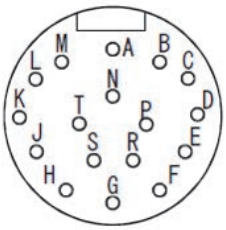

<table>
<tr><th>Pin number</th><th>Signal name</th></tr>
<tr><td>A</td><td>MD</td></tr>
<tr><td>B</td><td>MDR</td></tr>
<tr><td>C</td><td>MR</td></tr>
<tr><td>D</td><td>MRR</td></tr>
<tr><td>E</td><td></td></tr>
<tr><td>F</td><td>BAT</td></tr>
<tr><td>G</td><td>LG</td></tr>
<tr><td>H</td><td></td></tr>
<tr><td>J</td><td></td></tr>
<tr><td>K</td><td></td></tr>
<tr><td>L</td><td></td></tr>
<tr><td>M</td><td></td></tr>
<tr><td>N</td><td>SHD</td></tr>
<tr><td>P</td><td></td></tr>
<tr><td>R</td><td>LG</td></tr>
<tr><td>S</td><td>P5</td></tr>
<tr><td>T</td><td></td></tr>
</table></td><td> 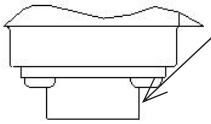
Encoder connector
CMV1-R10P
Encoder connector
Pin assignment
 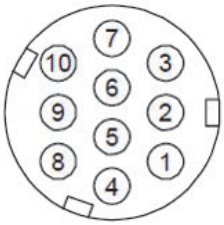

<table>
<tr><th>Pin number</th><th>Signal name</th></tr>
<tr><td>1</td><td>MR</td></tr>
<tr><td>2</td><td>MRR</td></tr>
<tr><td>3</td><td></td></tr>
<tr><td>4</td><td>BAT</td></tr>
<tr><td>5</td><td>LG</td></tr>
<tr><td>6</td><td></td></tr>
<tr><td>7</td><td></td></tr>
<tr><td>8</td><td>P5</td></tr>
<tr><td>9</td><td></td></tr>
<tr><td>10</td><td>SHD</td></tr>
</table></td></tr>
<tr><td>Electromagnetic brake connector</td><td> 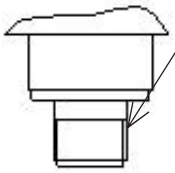
Electromagnetic brake connector
MS3102A10SL-4P
Electromagnetic brake connector
Pin assignment
 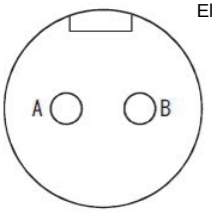

<table>
<tr><th>Pin number</th><th>Signal name</th></tr>
<tr><td>A</td><td>B1</td></tr>
<tr><td>B</td><td>B2</td></tr>
</table></td><td> 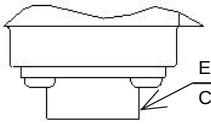
Electromagnetic brake connector
CMV1-R2P
Electromagnetic brake connector
Pin assignment
 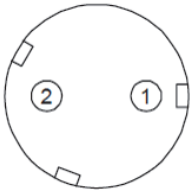

<table>
<tr><th>Pin number</th><th>Signal name</th></tr>
<tr><td>1</td><td>B1</td></tr>
<tr><td>2</td><td>B2</td></tr>
</table></td></tr>
</table>

(5) HC-UFS motor

	MR-J2S series (HC-UFS) Target models: HC-UFS72(B), UFS152(B)	MR-J4 series (HG-UR) Target model: HG-UR72(B), UR152(B)
Motor appearance	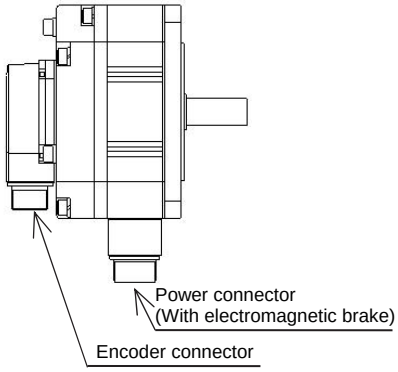	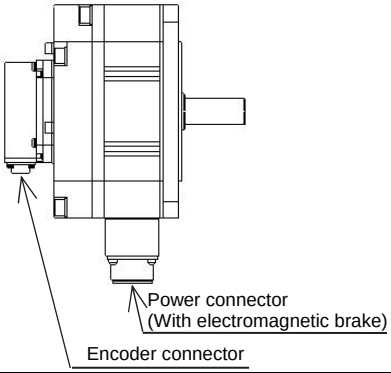
Power connector	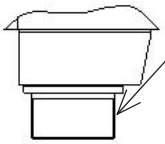 Power connector Pin assignment 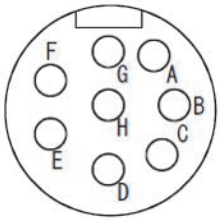 Pin number / Signal name A: U B: V C: W D: Earth E F G H	 Power connector Pin assignment 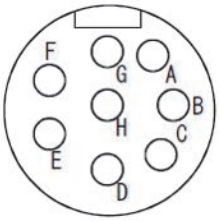 Pin number / Signal name A: U B: V C: W D: Earth E F G H
Encoder connector	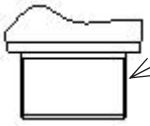 Encoder connector Pin assignment 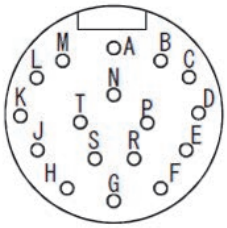 Pin number / Signal name A: MD B: MDR C: MR D: MRR E F: BAT G: LG H J K L M N: SHD P R: LG S: P5 T	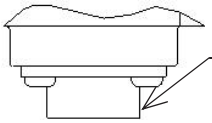 Encoder connector Pin assignment 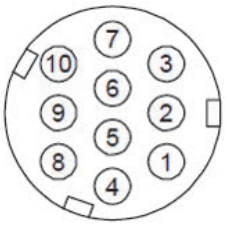 Pin number / Signal name 1: MR 2: MRR 3 4: BAT 5: LG 6 7 8: P5 9 10: SHD
Electromagnetic brake connector (Power connector)	 Power connector (with brake) Pin assignment 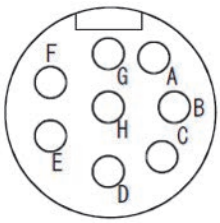 Pin number / Signal name A: U B: V C: W D: Earth E F G: B1 H: B2	 Power connector (with brake) Pin assignment 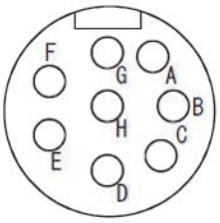 Pin number / Signal name A: U B: V C: W D: Earth E F G: B1 H: B2

	MR-J2S series (HC-UFS) Target models: HC-UFS202(B), UFS352(B),UFS502(B)	MR-J4 series (HG-UR) Target models: HG-UR202(B), UR352(B), UR502(B)
Motor appearance	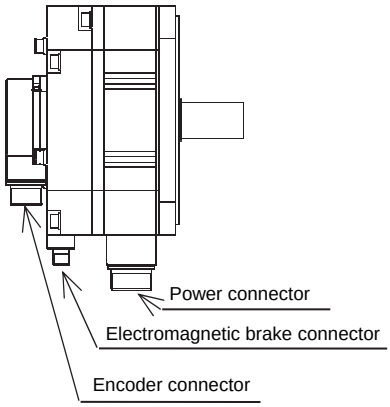	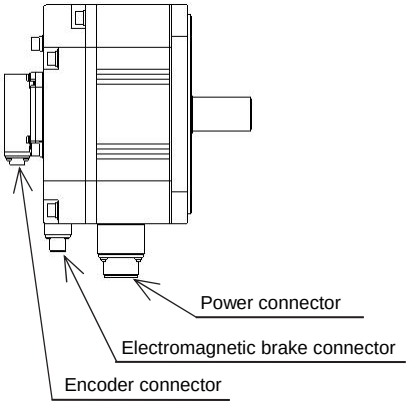
Power connector	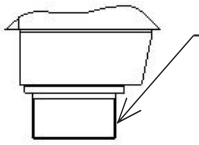 Power connector Pin assignment 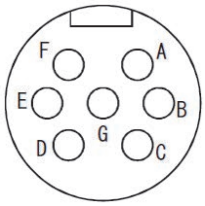 Pin number / Signal name A: U B: V C: W D: Earth E: F: G:	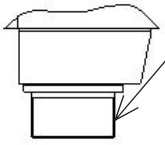 Power connector Pin assignment 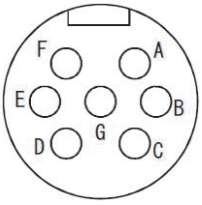 Pin number / Signal name A: U B: V C: W D: Earth E: F: G:
Encoder connector	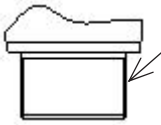 Encoder connector Pin assignment 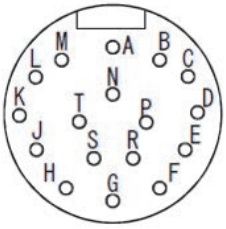 Pin number / Signal name A: MD B: MDR C: MR D: MRR E: F: BAT G: LG H: J: K: L: M: N: SHD P: R: LG S: P5 T:	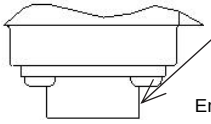 Encoder connector Pin assignment 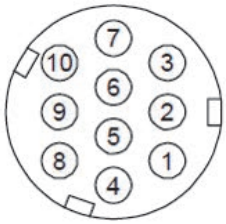 Pin number / Signal name 1: MR 2: MRR 3: 4: BAT 5: LG 6: 7: 8: P5 9: 10: SHD
Electromagnetic brake connector	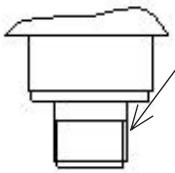 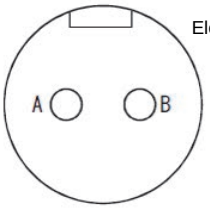 Electromagnetic brake connector Pin assignment Pin number / Signal name A: B1 B: B2	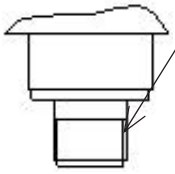 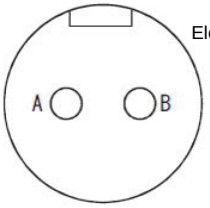 Electromagnetic brake connector Pin assignment Pin number / Signal name A: B1 B: B2

(6) HA-LFS motor

<table>
<tr><td>Motor appearance</td><td>MR-J2S series (HA-LFS)
Target models: HA-LFS502
 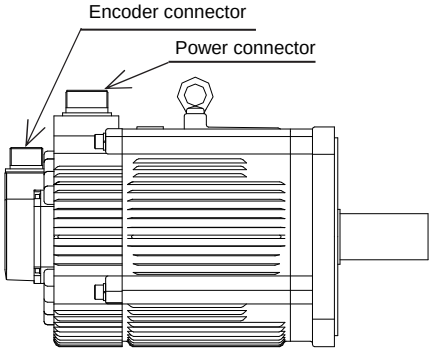
</td><td>MR-J4 series (HG-UR)
Target models: HG-SR502
 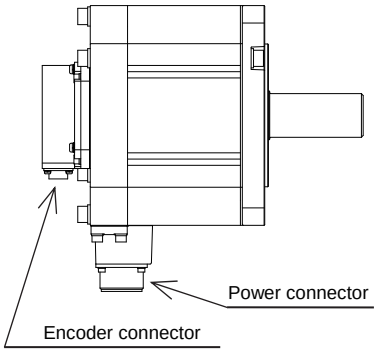
</td></tr>
<tr><td>Power connector</td><td> 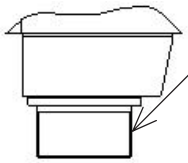
Power connector
CE05-2A24-10P
Power connector
Pin assignment
 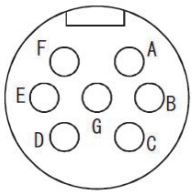

<table>
<tr><th>Pin number</th><th>Signal name</th></tr>
<tr><td>A</td><td>U</td></tr>
<tr><td>B</td><td>V</td></tr>
<tr><td>C</td><td>W</td></tr>
<tr><td>D</td><td>Earth</td></tr>
<tr><td>E</td><td></td></tr>
<tr><td>F</td><td></td></tr>
<tr><td>G</td><td></td></tr>
</table></td><td> 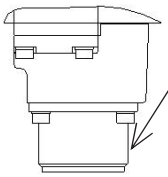
Power connector
MS3102A22-22P
 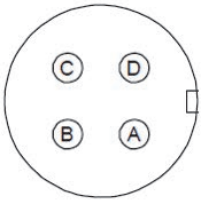

Power connector
Pin assignment
<table>
<tr><th>Pin number</th><th>Signal name</th></tr>
<tr><td>A</td><td>U</td></tr>
<tr><td>B</td><td>V</td></tr>
<tr><td>C</td><td>W</td></tr>
<tr><td>D</td><td>Earth</td></tr>
</table></td></tr>
<tr><td>Encoder connector</td><td> 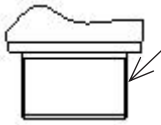
Encoder connector
MS3102A20-29P
Encoder connector
Pin assignment
 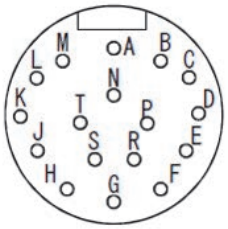

<table>
<tr><th>Pin number</th><th>Signal name</th></tr>
<tr><td>A</td><td>MD</td></tr>
<tr><td>B</td><td>MDR</td></tr>
<tr><td>C</td><td>MR</td></tr>
<tr><td>D</td><td>MRR</td></tr>
<tr><td>E</td><td></td></tr>
<tr><td>F</td><td>BAT</td></tr>
<tr><td>G</td><td>LG</td></tr>
<tr><td>H</td><td></td></tr>
<tr><td>J</td><td></td></tr>
<tr><td>K</td><td></td></tr>
<tr><td>L</td><td></td></tr>
<tr><td>M</td><td></td></tr>
<tr><td>N</td><td>SHD</td></tr>
<tr><td>P</td><td></td></tr>
<tr><td>R</td><td>LG</td></tr>
<tr><td>S</td><td>P5</td></tr>
<tr><td>T</td><td></td></tr>
</table></td><td> 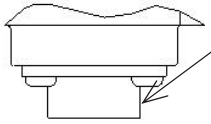
Encoder connector
CMV1-R10P
Encoder connector
Pin assignment
 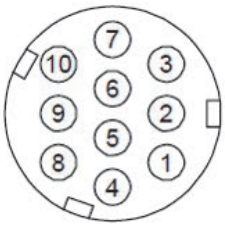

<table>
<tr><th>Pin number</th><th>Signal name</th></tr>
<tr><td>1</td><td>MR</td></tr>
<tr><td>2</td><td>MRR</td></tr>
<tr><td>3</td><td></td></tr>
<tr><td>4</td><td>BAT</td></tr>
<tr><td>5</td><td>LG</td></tr>
<tr><td>6</td><td></td></tr>
<tr><td>7</td><td></td></tr>
<tr><td>8</td><td>P5</td></tr>
<tr><td>9</td><td></td></tr>
<tr><td>10</td><td>SHD</td></tr>
</table></td></tr>
</table>

<table>
<tr><td>Motor appearance</td><td>MR-J2S series (HA-LFS)
Target models: HA-LFS702
 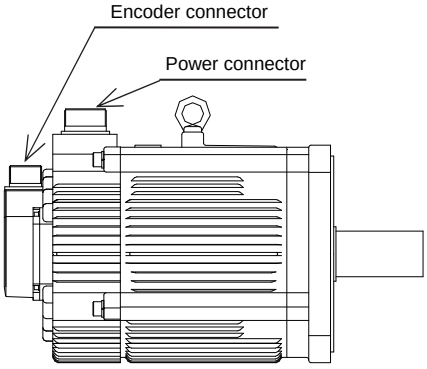
</td><td>MR-J4 series (HG-SR)
Target models: HG-SR702
 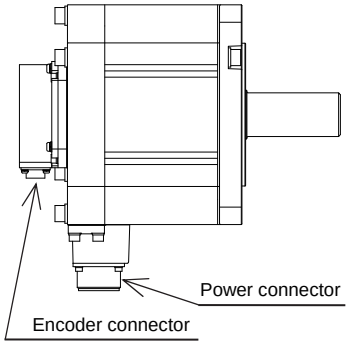
</td></tr>
<tr><td>Power connector</td><td> 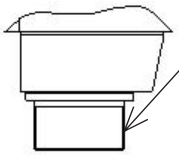
Power connector
CE05-2A32-17P
 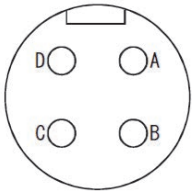

Power connector
Pin assignment
<table><tr><th>Pin number</th><th>Signal name</th></tr><tr><td>A</td><td>U</td></tr><tr><td>B</td><td>V</td></tr><tr><td>C</td><td>W</td></tr><tr><td>D</td><td>Earth</td></tr></table></td><td> 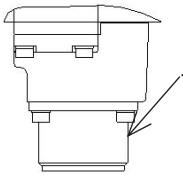
Power connector
MS3102A32-17P
 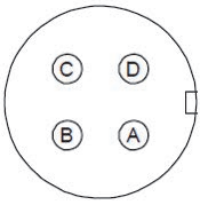

Power connector
Pin assignment
<table><tr><th>Pin number</th><th>Signal name</th></tr><tr><td>A</td><td>U</td></tr><tr><td>B</td><td>V</td></tr><tr><td>C</td><td>W</td></tr><tr><td>D</td><td>Earth</td></tr></table></td></tr>
<tr><td>Encoder connector</td><td> 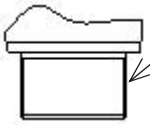
Encoder connector
MS3102A20-29P
Encoder connector
Pin assignment
<table><tr><th>Pin number</th><th>Signal name</th></tr><tr><td>A</td><td>MD</td></tr><tr><td>B</td><td>MDR</td></tr><tr><td>C</td><td>MR</td></tr><tr><td>D</td><td>MRR</td></tr><tr><td>E</td><td></td></tr><tr><td>F</td><td>BAT</td></tr><tr><td>G</td><td>LG</td></tr><tr><td>H</td><td></td></tr><tr><td>J</td><td></td></tr><tr><td>K</td><td></td></tr><tr><td>L</td><td></td></tr><tr><td>M</td><td></td></tr><tr><td>N</td><td>SHD</td></tr><tr><td>P</td><td></td></tr><tr><td>R</td><td>LG</td></tr><tr><td>S</td><td>P5</td></tr><tr><td>T</td><td></td></tr></table>
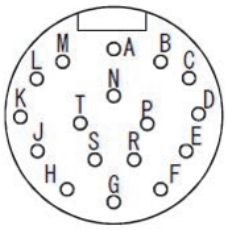
</td><td> 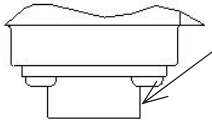
Encoder connector
CMV1-R10P
Encoder connector
Pin assignment
<table><tr><th>Pin number</th><th>Signal name</th></tr><tr><td>1</td><td>MR</td></tr><tr><td>2</td><td>MRR</td></tr><tr><td>3</td><td></td></tr><tr><td>4</td><td>BAT</td></tr><tr><td>5</td><td>LG</td></tr><tr><td>6</td><td></td></tr><tr><td>7</td><td></td></tr><tr><td>8</td><td>P5</td></tr><tr><td>9</td><td></td></tr><tr><td>10</td><td>SHD</td></tr></table>
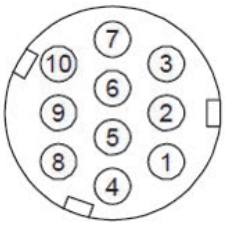
</td></tr>
</table>

<table>
<tr><td>Motor appearance</td><td>MR-J2S series (HA-LFS)
Target models: HA-LFS601(4)(B), LFS701M(4)(B)
HA-LFS11K2(4)(B)
 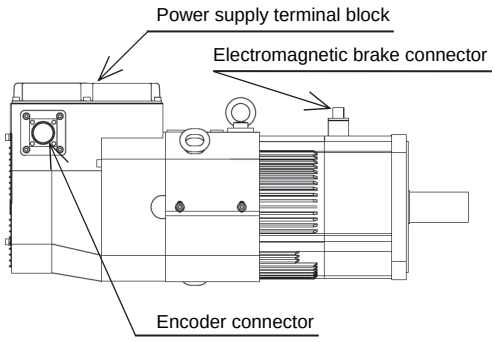
</td><td>MR-J4 series (HG-JR)
Target models: HG-JR601(4)(B), JR701M(4)(B)
HG-JR11K1M(4)(B)
 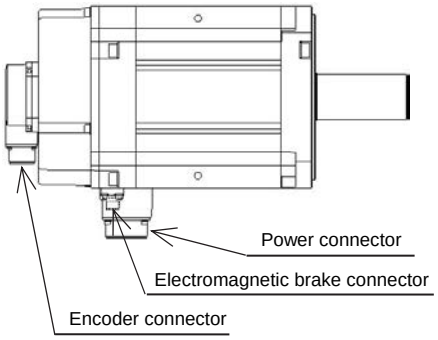
</td></tr>
<tr><td>Power connector
(Enlarged view of terminal box)</td><td> 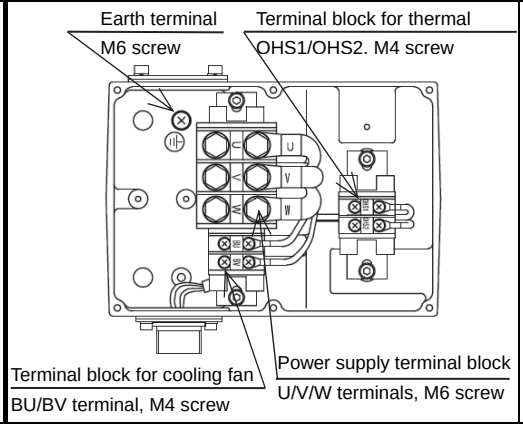
</td><td> 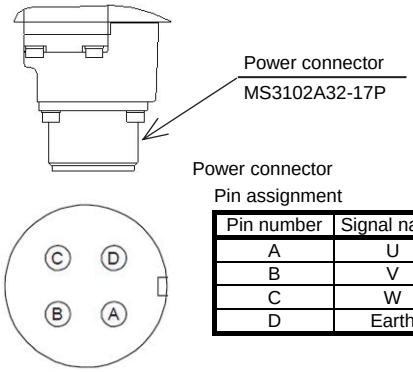

Power connector
Pin assignment
<table><tr><th>Pin number</th><th>Signal name</th></tr><tr><td>A</td><td>U</td></tr><tr><td>B</td><td>V</td></tr><tr><td>C</td><td>W</td></tr><tr><td>D</td><td>Earth</td></tr></table></td></tr>
<tr><td>Encoder connector</td><td> 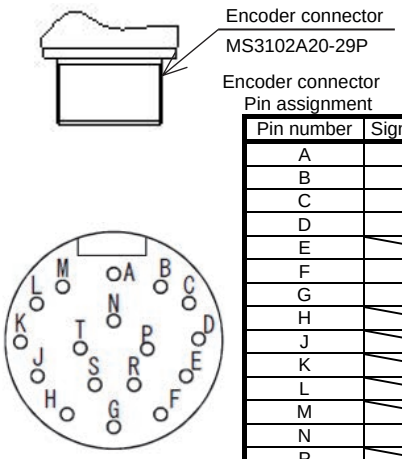

Encoder connector
Pin assignment
<table><tr><th>Pin number</th><th>Signal name</th></tr><tr><td>A</td><td>MD</td></tr><tr><td>B</td><td>MDR</td></tr><tr><td>C</td><td>MR</td></tr><tr><td>D</td><td>MRR</td></tr><tr><td>E</td><td></td></tr><tr><td>F</td><td>BAT</td></tr><tr><td>G</td><td>LG</td></tr><tr><td>H</td><td></td></tr><tr><td>J</td><td></td></tr><tr><td>K</td><td></td></tr><tr><td>L</td><td></td></tr><tr><td>M</td><td></td></tr><tr><td>N</td><td>SHD</td></tr><tr><td>P</td><td></td></tr><tr><td>R</td><td>LG</td></tr><tr><td>S</td><td>P5</td></tr><tr><td>T</td><td></td></tr></table></td><td> 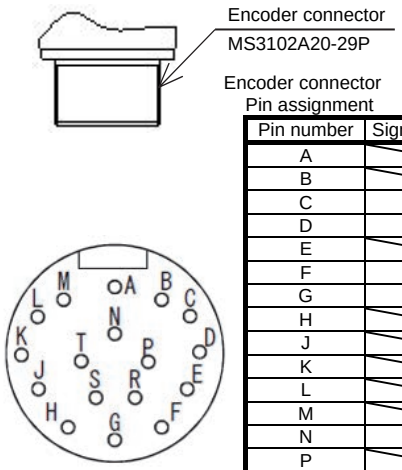

Encoder connector
Pin assignment
<table><tr><th>Pin number</th><th>Signal name</th></tr><tr><td>A</td><td></td></tr><tr><td>B</td><td></td></tr><tr><td>C</td><td>MR</td></tr><tr><td>D</td><td>MRR</td></tr><tr><td>E</td><td></td></tr><tr><td>F</td><td>BAT</td></tr><tr><td>G</td><td>LG</td></tr><tr><td>H</td><td></td></tr><tr><td>J</td><td></td></tr><tr><td>K</td><td></td></tr><tr><td>L</td><td></td></tr><tr><td>M</td><td></td></tr><tr><td>N</td><td>SHD</td></tr><tr><td>P</td><td></td></tr><tr><td>R</td><td>LG</td></tr><tr><td>S</td><td>P5</td></tr><tr><td>T</td><td></td></tr></table></td></tr>
<tr><td>Electromagnetic brake connector</td><td> 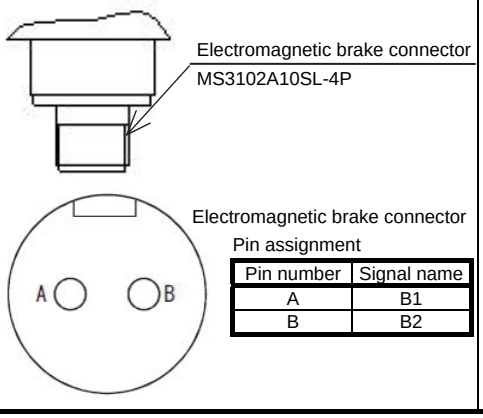

Electromagnetic brake connector
Pin assignment
<table><tr><th>Pin number</th><th>Signal name</th></tr><tr><td>A</td><td>B1</td></tr><tr><td>B</td><td>B2</td></tr></table></td><td> 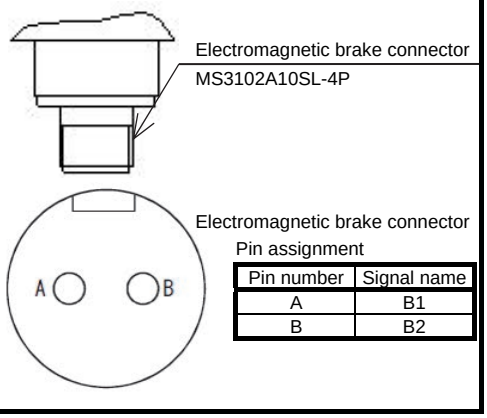

Electromagnetic brake connector
Pin assignment
<table><tr><th>Pin number</th><th>Signal name</th></tr><tr><td>A</td><td>B1</td></tr><tr><td>B</td><td>B2</td></tr></table></td></tr>
</table>

	MR-J2S series (HA-LFS)	MR-J4 series (HG-JR)
Motor appearance	Target models: HA-LFS801(4)(B), LFS12K1(4)(B) HA-LFS11K1M(4)(B), LFS15K1M(4)(B) HA-LFS15K2(4)(B), LFS22K2(4)(B) 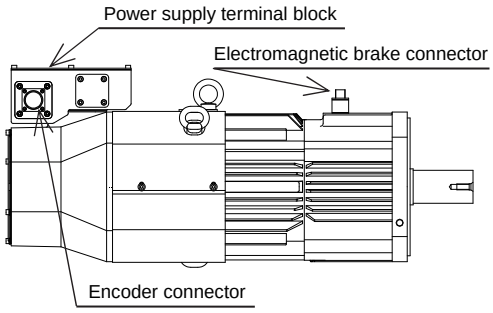 	Target models: HG-JR801(4)(B), JR12K1(4)(B) HG-JR11K1M(4)(B), JR15K1M(4)(B) 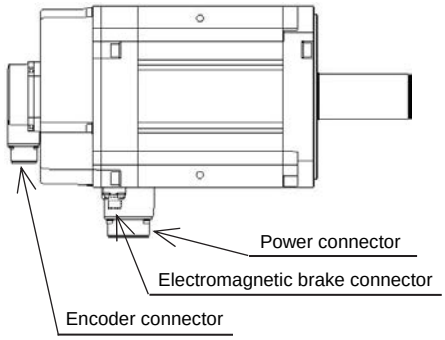
Power connector (Enlarged view of terminal box)	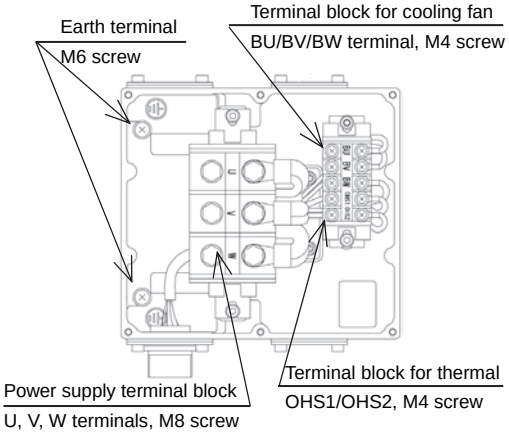 	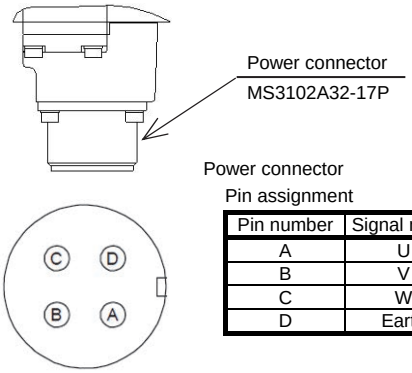 Power connector Pin assignment Pin number / Signal name A: U B: V C: W D: Earth
Encoder connector	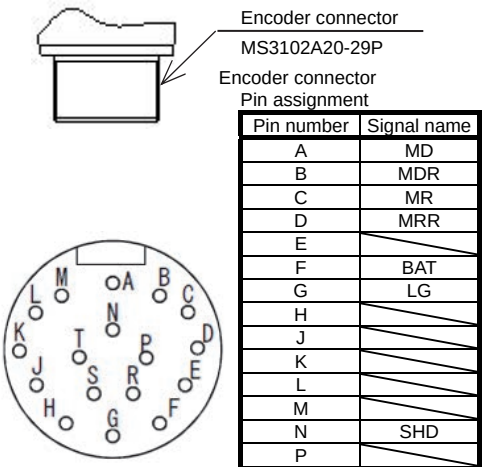 Encoder connector Pin assignment Pin number / Signal name A: MD B: MDR C: MR D: MRR E: F: BAT G: LG H: J: K: L: M: N: SHD P: R: LG S: P5 T:	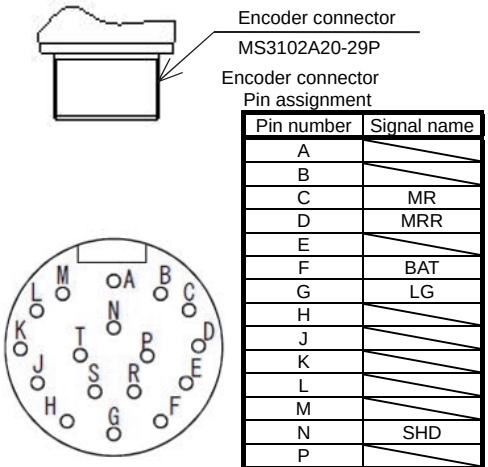 Encoder connector Pin assignment Pin number / Signal name A: B: C: MR D: MRR E: F: BAT G: LG H: J: K: L: M: N: SHD P: R: LG S: P5 T:
Electromagnetic brake connector	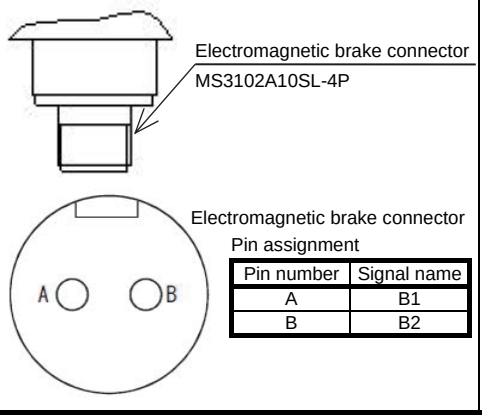 Electromagnetic brake connector Pin assignment Pin number / Signal name A: B1 B: B2	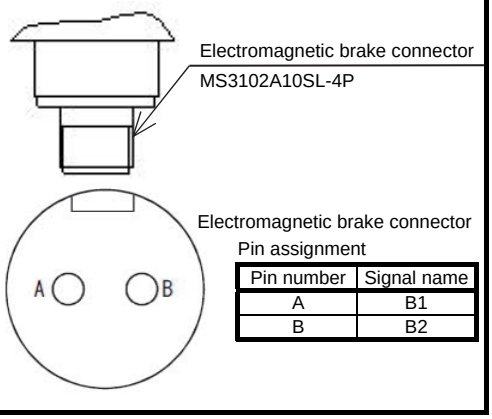 Electromagnetic brake connector Pin assignment Pin number / Signal name A: B1 B: B2

<table>
<tr>
<td>Motor appearance</td>
<td>MR-J2S series (HA-LFS)
Target models: HA-LFS15K1(4), LFS20K1(4)
HA-LFS22K1M(4), LFS30K1M4
HA-LFS30K24, LFS37K24
 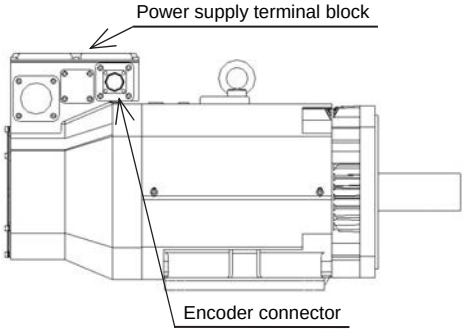
</td>
<td>MR-J4 series (HG-JR)
Target models: HG-JR15K1(4), JR20K1(4)
HG-JR22K1M(4), JR30K1M4
 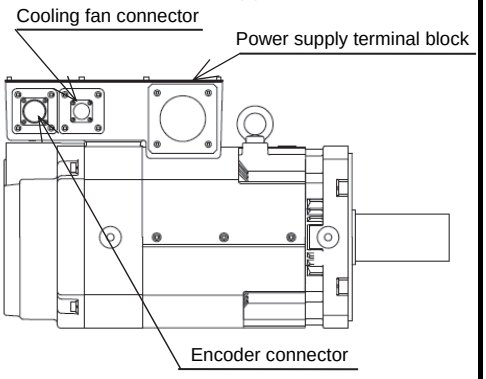
</td>
</tr>
<tr>
<td>Power connector
(Enlarged view of terminal box)</td>
<td> 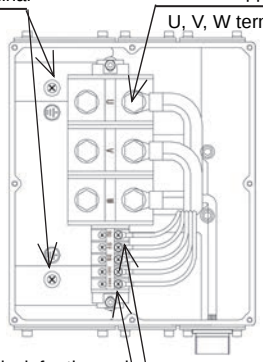
</td>
<td> 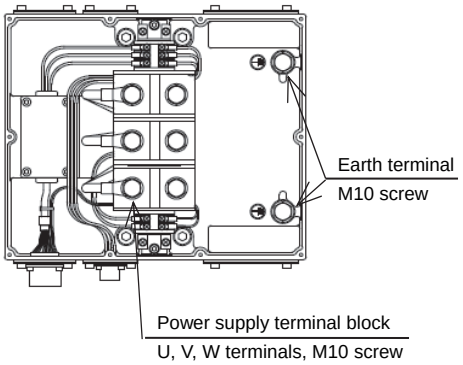
</td>
</tr>
<tr>
<td>Encoder connector</td>
<td> 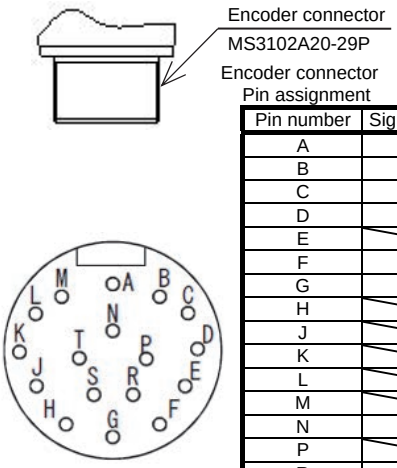

Encoder connector
Pin assignment
<table>
<tr><th>Pin number</th><th>Signal name</th></tr>
<tr><td>A</td><td>MD</td></tr>
<tr><td>B</td><td>MDR</td></tr>
<tr><td>C</td><td>MR</td></tr>
<tr><td>D</td><td>MRR</td></tr>
<tr><td>E</td><td></td></tr>
<tr><td>F</td><td>BAT</td></tr>
<tr><td>G</td><td>LG</td></tr>
<tr><td>H</td><td></td></tr>
<tr><td>J</td><td></td></tr>
<tr><td>K</td><td></td></tr>
<tr><td>L</td><td></td></tr>
<tr><td>M</td><td></td></tr>
<tr><td>N</td><td>SHD</td></tr>
<tr><td>P</td><td></td></tr>
<tr><td>R</td><td>LG</td></tr>
<tr><td>S</td><td>P5</td></tr>
<tr><td>T</td><td></td></tr>
</table></td>
<td> 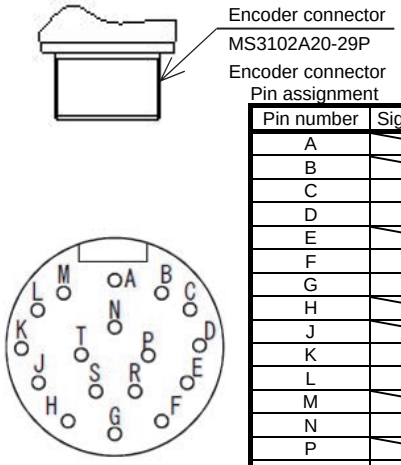

Encoder connector
Pin assignment
<table>
<tr><th>Pin number</th><th>Signal name</th></tr>
<tr><td>A</td><td></td></tr>
<tr><td>B</td><td></td></tr>
<tr><td>C</td><td>MR</td></tr>
<tr><td>D</td><td>MRR</td></tr>
<tr><td>E</td><td></td></tr>
<tr><td>F</td><td>BAT</td></tr>
<tr><td>G</td><td>LG</td></tr>
<tr><td>H</td><td></td></tr>
<tr><td>J</td><td></td></tr>
<tr><td>K</td><td>THM1</td></tr>
<tr><td>L</td><td>THM1</td></tr>
<tr><td>M</td><td></td></tr>
<tr><td>N</td><td>SHD</td></tr>
<tr><td>P</td><td></td></tr>
<tr><td>R</td><td>LG</td></tr>
<tr><td>S</td><td>P5</td></tr>
<tr><td>T</td><td></td></tr>
</table></td>
</tr>
<tr>
<td>Cooling fan connector</td>
<td></td>
<td> 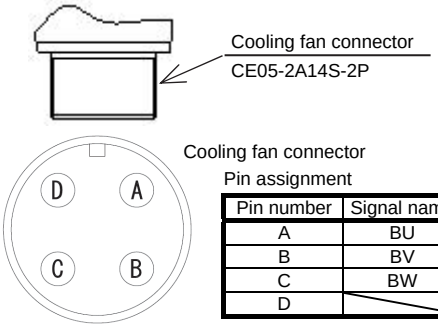

Cooling fan connector
Pin assignment
<table>
<tr><th>Pin number</th><th>Signal name</th></tr>
<tr><td>A</td><td>BU</td></tr>
<tr><td>B</td><td>BV</td></tr>
<tr><td>C</td><td>BW</td></tr>
<tr><td>D</td><td></td></tr>
</table></td>
</tr>
</table>

<table>
<tr>
<td>Motor appearance</td>
<td>MR-J2S series (HA-LFS)
Target models: HA-LFS30K1M
HA-LFS30K2, LFS37K2
 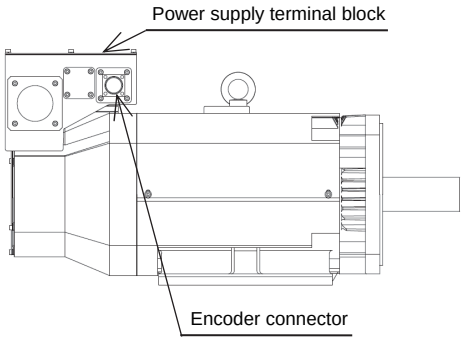
</td>
<td>MR-J4 series (HG-JR)
Target model: HG-JR22K1M
HG-JR30K1M
 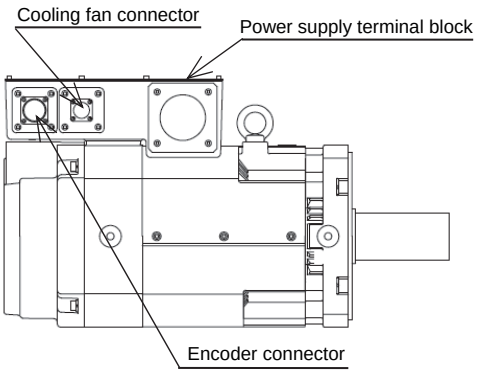
</td>
</tr>
<tr>
<td>Power connector
(Enlarged view of terminal box)</td>
<td> 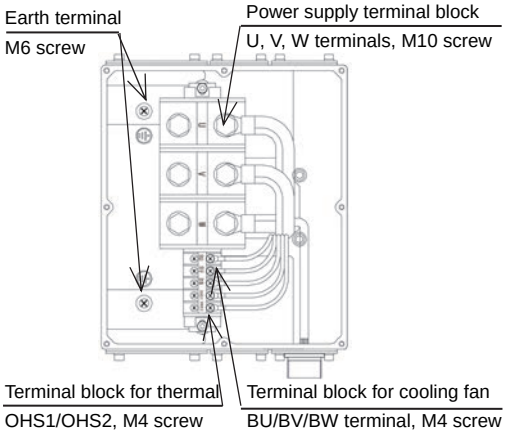
</td>
<td> 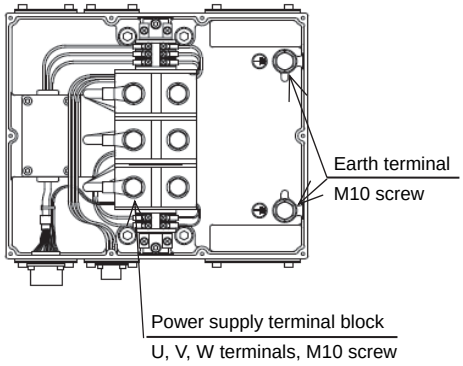
</td>
</tr>
<tr>
<td>Encoder connector</td>
<td> 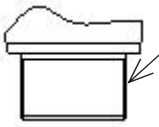
Encoder connector
MS3102A20-29P
Encoder connector
Pin assignment
 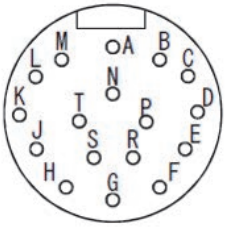

<table>
<tr><th>Pin number</th><th>Signal name</th></tr>
<tr><td>A</td><td>MD</td></tr>
<tr><td>B</td><td>MDR</td></tr>
<tr><td>C</td><td>MR</td></tr>
<tr><td>D</td><td>MRR</td></tr>
<tr><td>E</td><td></td></tr>
<tr><td>F</td><td>BAT</td></tr>
<tr><td>G</td><td>LG</td></tr>
<tr><td>H</td><td></td></tr>
<tr><td>J</td><td></td></tr>
<tr><td>K</td><td></td></tr>
<tr><td>L</td><td></td></tr>
<tr><td>M</td><td></td></tr>
<tr><td>N</td><td>SHD</td></tr>
<tr><td>P</td><td></td></tr>
<tr><td>R</td><td>LG</td></tr>
<tr><td>S</td><td>P5</td></tr>
<tr><td>T</td><td></td></tr>
</table></td>
<td> 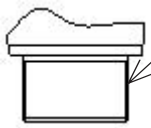
Encoder connector
MS3102A20-29P
Encoder connector
Pin assignment
 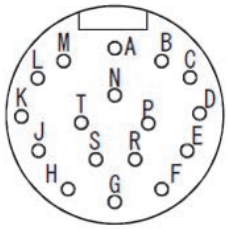

<table>
<tr><th>Pin number</th><th>Signal name</th></tr>
<tr><td>A</td><td></td></tr>
<tr><td>B</td><td></td></tr>
<tr><td>C</td><td>MR</td></tr>
<tr><td>D</td><td>MRR</td></tr>
<tr><td>E</td><td></td></tr>
<tr><td>F</td><td>BAT</td></tr>
<tr><td>G</td><td>LG</td></tr>
<tr><td>H</td><td></td></tr>
<tr><td>J</td><td></td></tr>
<tr><td>K</td><td>THM1</td></tr>
<tr><td>L</td><td>THM1</td></tr>
<tr><td>M</td><td></td></tr>
<tr><td>N</td><td>SHD</td></tr>
<tr><td>P</td><td></td></tr>
<tr><td>R</td><td>LG</td></tr>
<tr><td>S</td><td>P5</td></tr>
<tr><td>T</td><td></td></tr>
</table></td>
</tr>
<tr>
<td>Cooling fan connector</td>
<td></td>
<td> 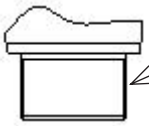
Cooling fan connector
CE05-2A14S-2P
 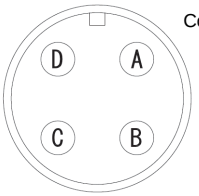

Cooling fan connector
Pin assignment
<table>
<tr><th>Pin number</th><th>Signal name</th></tr>
<tr><td>A</td><td>BU</td></tr>
<tr><td>B</td><td>BV</td></tr>
<tr><td>C</td><td>BW</td></tr>
<tr><td>D</td><td></td></tr>
</table></td>
</tr>
</table>

<table>
<tr>
<td>Motor appearance</td>
<td>MR-J2S series (HA-LFS)
Target models: HA-LFS25K1(4), LFS30K1(4), LFS37K1(4)
HA-LFS37K1M(4), LFS45K1M4,LFS50K1M4
HA-LFS45K24,LFS55K24
 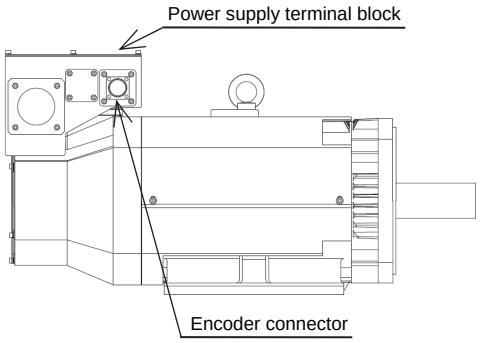
</td>
<td>MR-J4 series (HG-JR)
Target models: HG-JR25K1(4), JR30K1(4), JR37K1(4)
HG-JR37K1M(4),JR45K1M4,JR55K1M4
 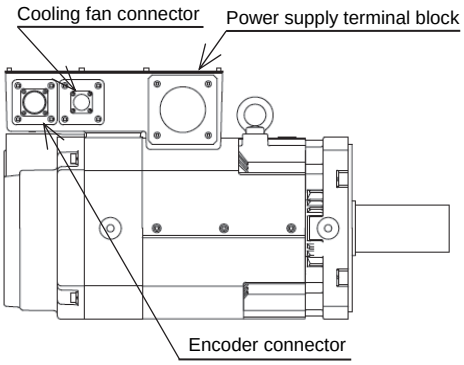
</td>
</tr>
<tr>
<td>Power connector
(Enlarged view of terminal box)</td>
<td> 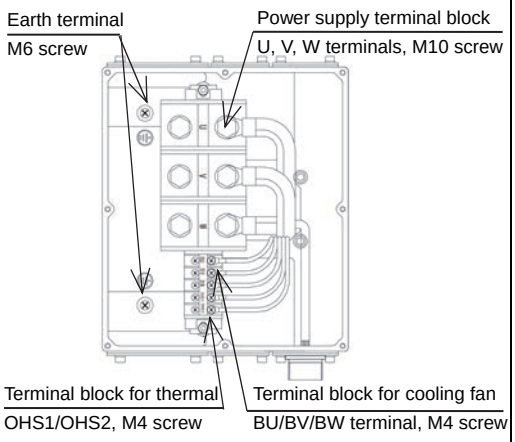
</td>
<td> 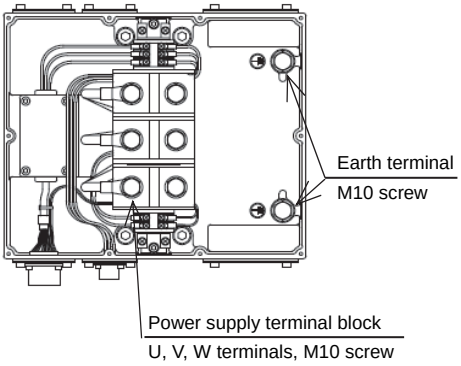
</td>
</tr>
<tr>
<td>Encoder connector</td>
<td> 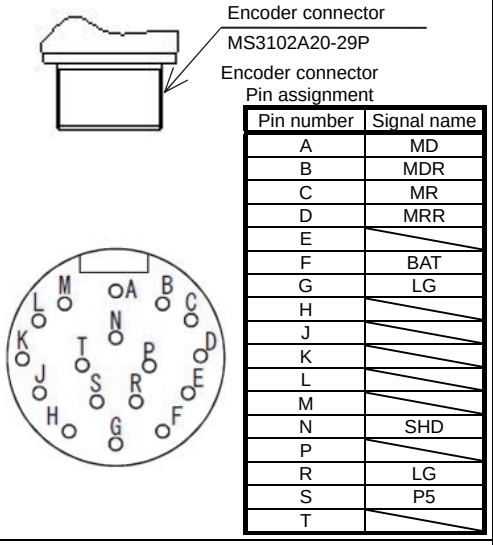

<table>
<tr><th>Pin number</th><th>Signal name</th></tr>
<tr><td>A</td><td>MD</td></tr>
<tr><td>B</td><td>MDR</td></tr>
<tr><td>C</td><td>MR</td></tr>
<tr><td>D</td><td>MRR</td></tr>
<tr><td>E</td><td></td></tr>
<tr><td>F</td><td>BAT</td></tr>
<tr><td>G</td><td>LG</td></tr>
<tr><td>H</td><td></td></tr>
<tr><td>J</td><td></td></tr>
<tr><td>K</td><td></td></tr>
<tr><td>L</td><td></td></tr>
<tr><td>M</td><td></td></tr>
<tr><td>N</td><td>SHD</td></tr>
<tr><td>P</td><td></td></tr>
<tr><td>R</td><td>LG</td></tr>
<tr><td>S</td><td>P5</td></tr>
<tr><td>T</td><td></td></tr>
</table></td>
<td> 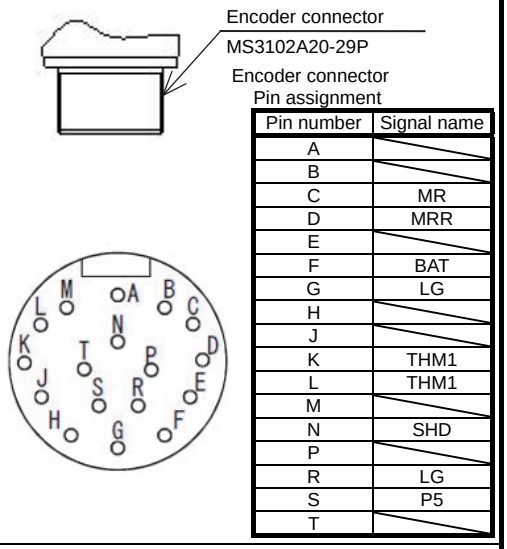

<table>
<tr><th>Pin number</th><th>Signal name</th></tr>
<tr><td>A</td><td></td></tr>
<tr><td>B</td><td></td></tr>
<tr><td>C</td><td>MR</td></tr>
<tr><td>D</td><td>MRR</td></tr>
<tr><td>E</td><td></td></tr>
<tr><td>F</td><td>BAT</td></tr>
<tr><td>G</td><td>LG</td></tr>
<tr><td>H</td><td></td></tr>
<tr><td>J</td><td></td></tr>
<tr><td>K</td><td>THM1</td></tr>
<tr><td>L</td><td>THM1</td></tr>
<tr><td>M</td><td></td></tr>
<tr><td>N</td><td>SHD</td></tr>
<tr><td>P</td><td></td></tr>
<tr><td>R</td><td>LG</td></tr>
<tr><td>S</td><td>P5</td></tr>
<tr><td>T</td><td></td></tr>
</table></td>
</tr>
<tr>
<td>Cooling fan connector</td>
<td></td>
<td> 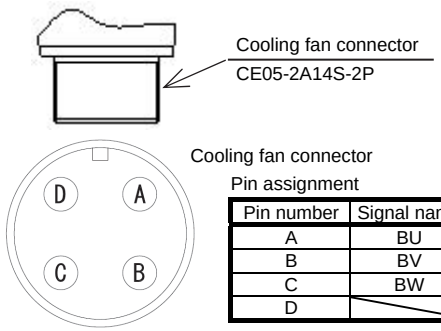

<table>
<tr><th>Pin number</th><th>Signal name</th></tr>
<tr><td>A</td><td>BU</td></tr>
<tr><td>B</td><td>BV</td></tr>
<tr><td>C</td><td>BW</td></tr>
<tr><td>D</td><td></td></tr>
</table></td>
</tr>
</table>

2.7 Comparison of Servo Motor Torque Characteristics

◆ Comparison of torque characteristics between the HG-KR and HC-KFS series (—: HG-KR, ---: HC-KFS)

• HC-KFS series, 200 V class

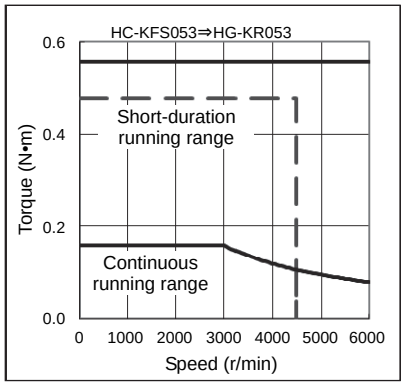

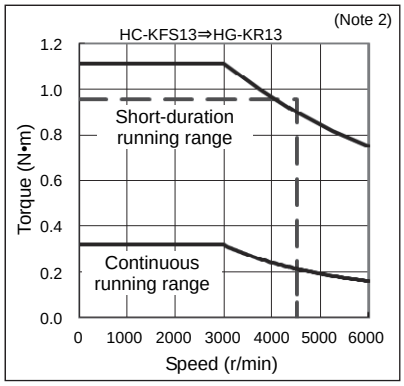

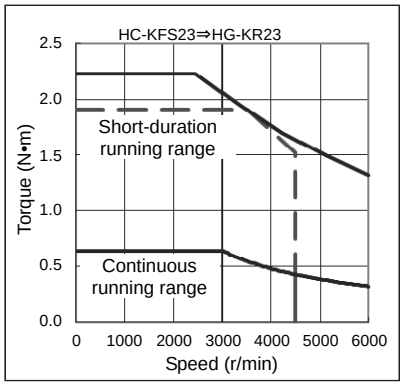

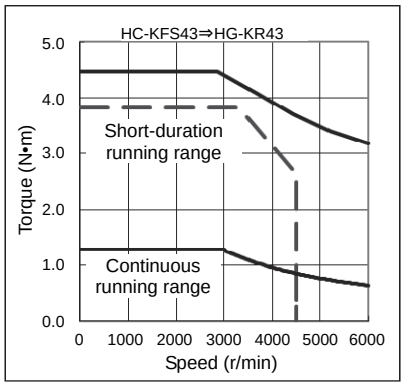

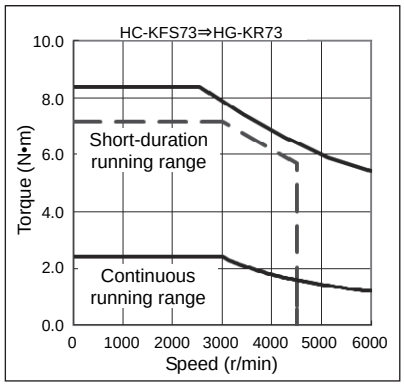

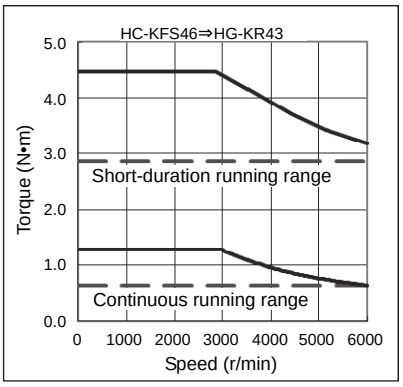

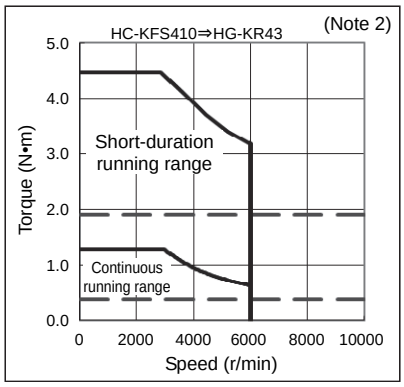

Note 1. The above torque characteristics are for 3-phase 200 V AC and 1-phase 230 V AC.
2. Please contact your local sales office if the compatibility of torque characteristics is required.

◆ Comparison of torque characteristics between the HG-KR and HC-KFS series (—: HG-KR, ---: HC-KFS)

• HC-KFS series, 100 V class

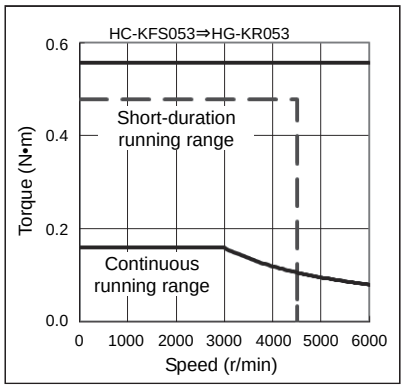

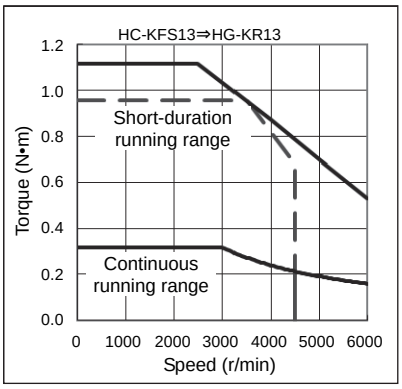

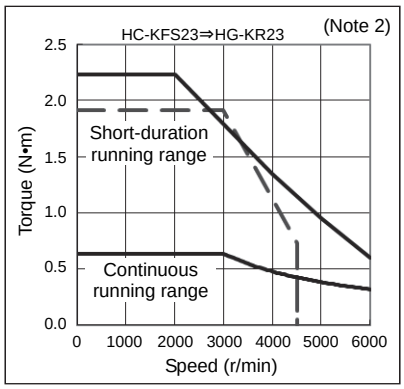

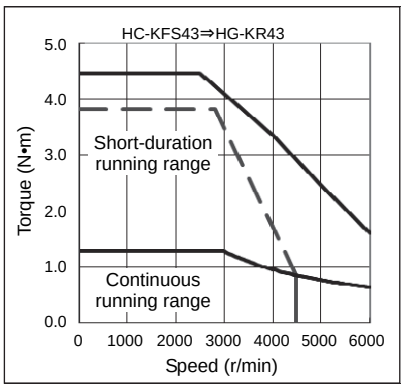

Note 1. The above torque characteristics are for 1-phase 100 V AC.

2. Please contact your local sales office if the compatibility of torque characteristics is required.

◆ Comparison of torque characteristics between the HG-MR and HC-MFS series (—: HG-MR, ---: HC-MFS)

・HC-MFS series, 200 V class

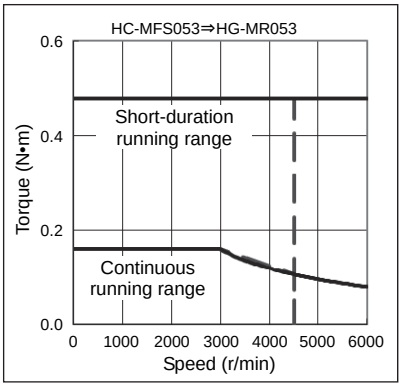

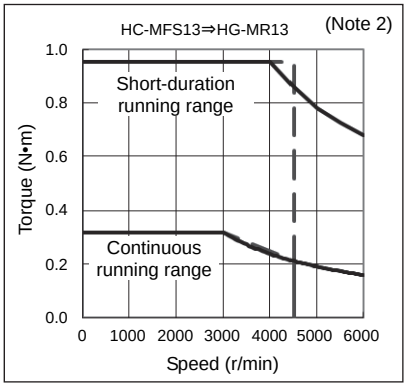

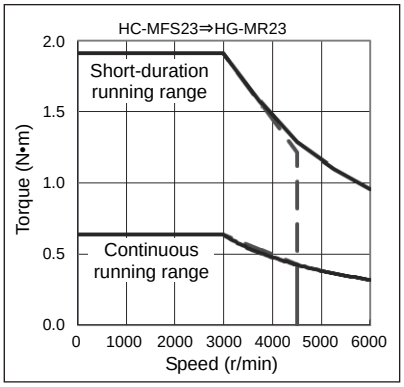

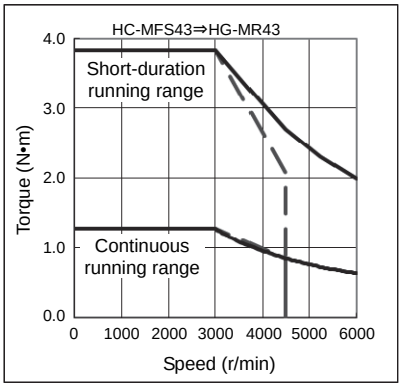

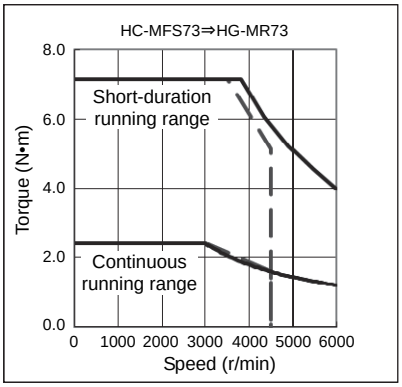

Note 1. The above torque characteristics are for 3-phase 200 V AC and 1-phase 230 V AC.
2. Please contact your local sales office if the compatibility of torque characteristics is required.

• HC-MFS series, 100 V class

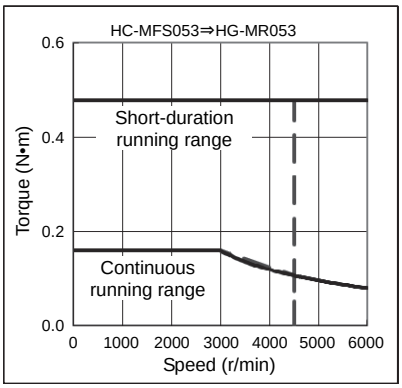

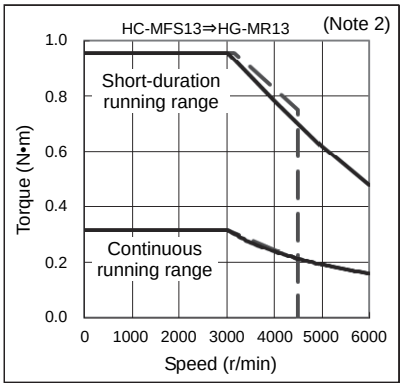

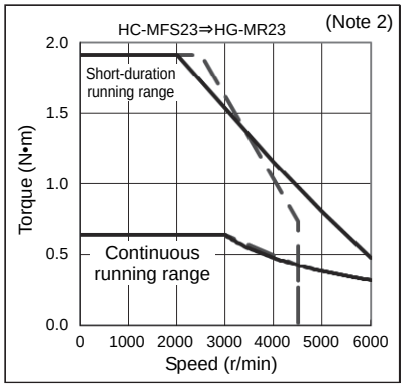

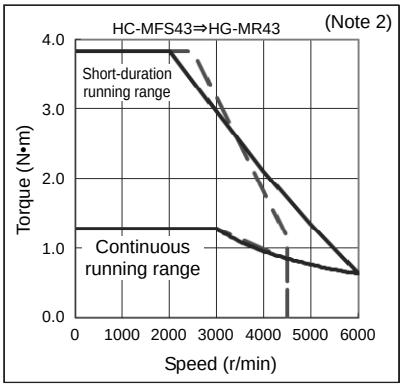

Note 1. The above torque characteristics are for 1-phase 100 V AC.
2. Please contact your local sales office if the compatibility of torque characteristics is required.

◆ Comparison of torque characteristics between the HG-SR and HC-SFS series (—: HG-SR, ---: HC-SFS)

• HC-SFS 1000 r/min, 2000 r/min series, 200 V class

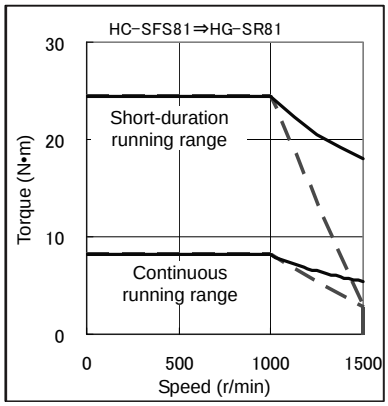

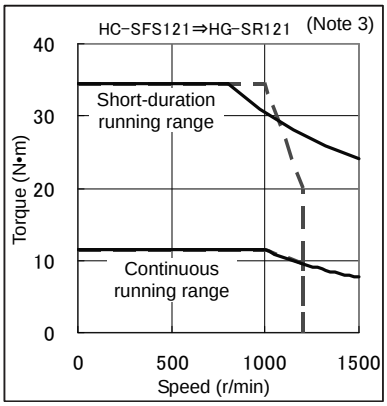

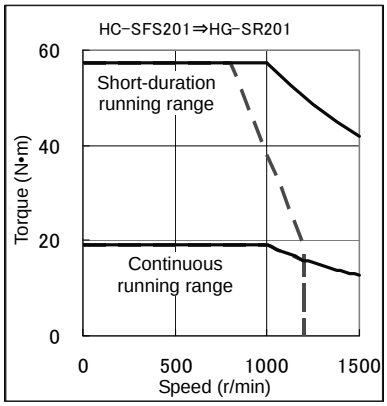

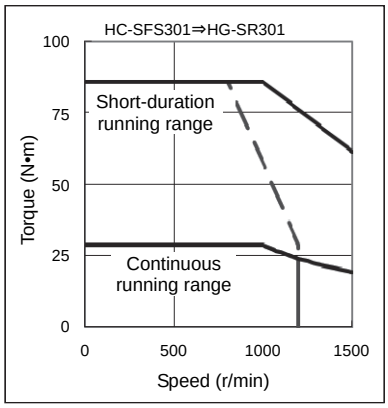

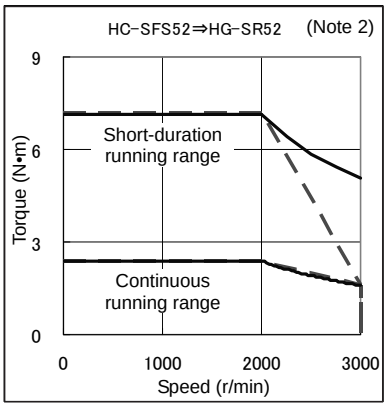

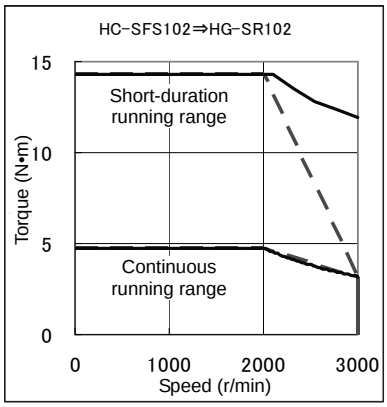

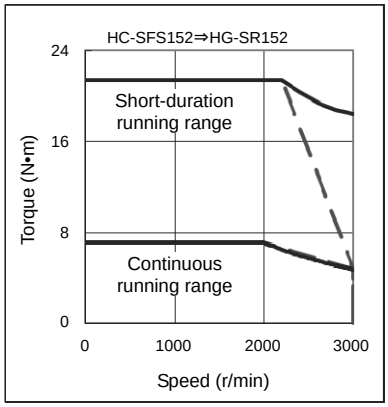

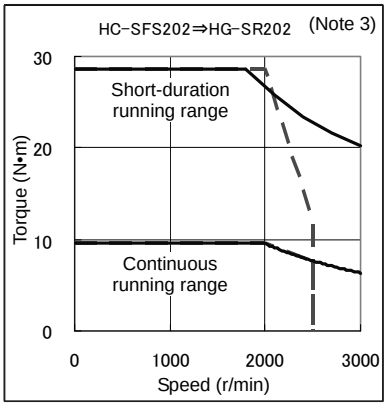

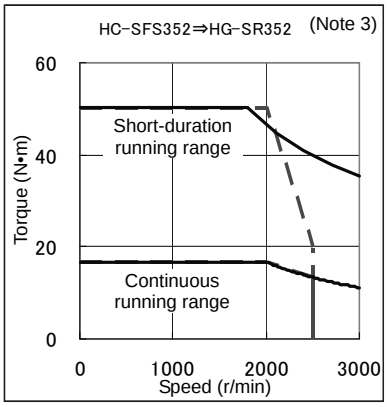

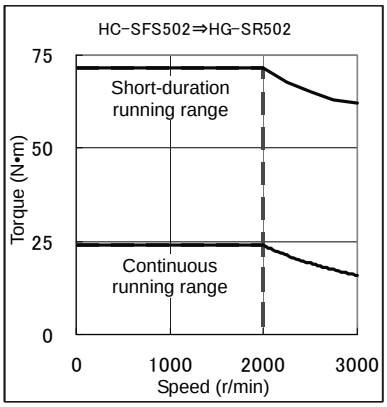

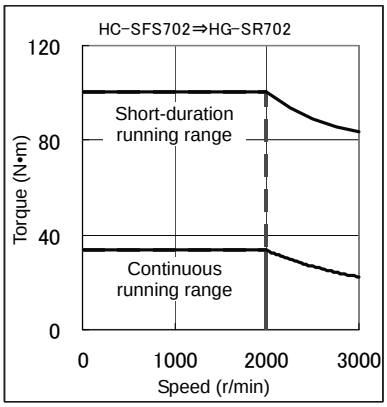

Note 1. The above torque characteristics are for 3-phase 200 V AC.
2. As for 1-phase 230 V AC, refer to the catalog or Instruction Manual.
3. Please contact your local sales office if the compatibility of torque characteristics is required.

◆ Comparison of torque characteristics between the HG-SR and HC-SFS series (—: HG-SR, ---: HC-SFS)

• HC-SFS 3000 r/min series, 200 V class

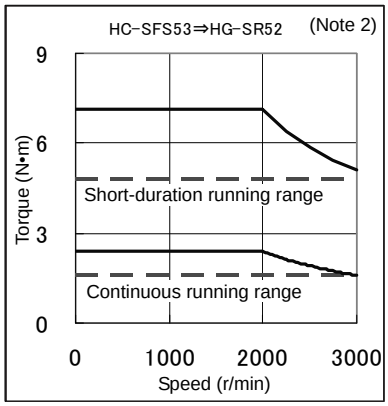

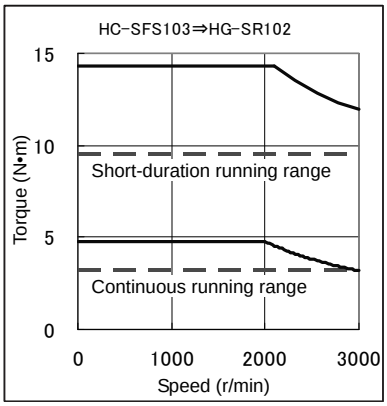

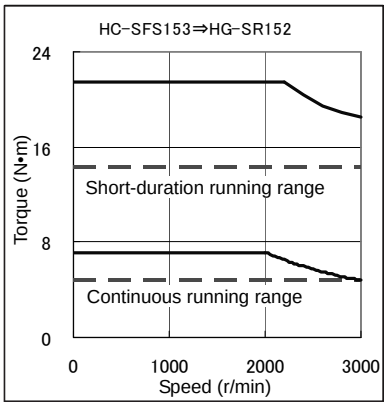

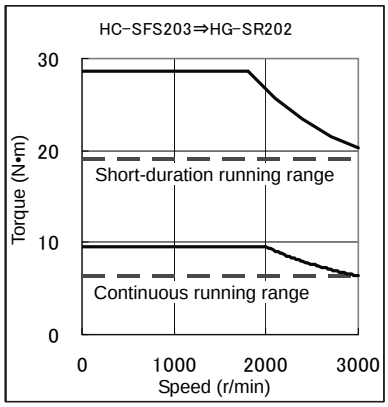

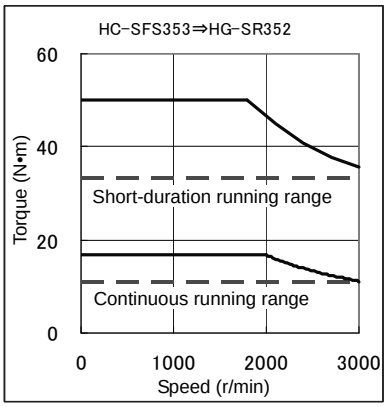

Note 1. The above torque characteristics are for 3-phase 200 V AC.
2. As for 1-phase 230 V AC, refer to the catalog or Instruction Manual.

◆ Comparison of torque characteristics between the HG-SR and HC-SFS series (—: HG-SR, ---: HC-SFS)

• HC-SFS: 2000 r/min series, 400 V class

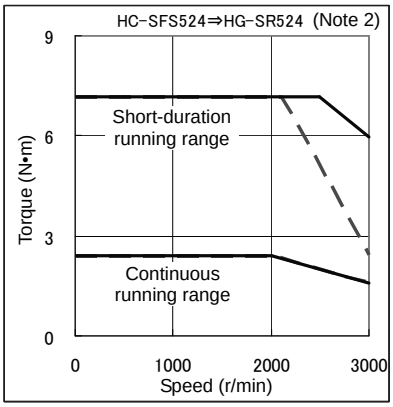

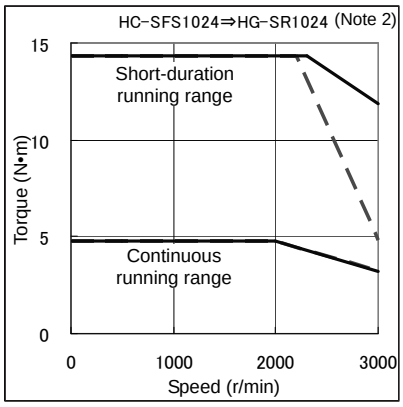

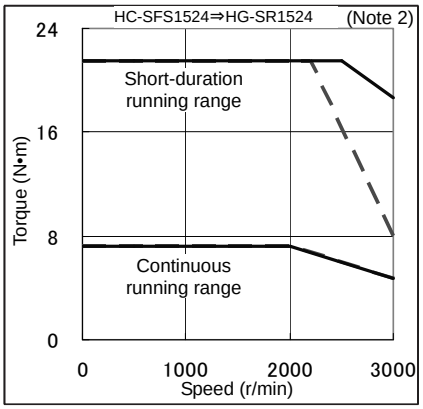

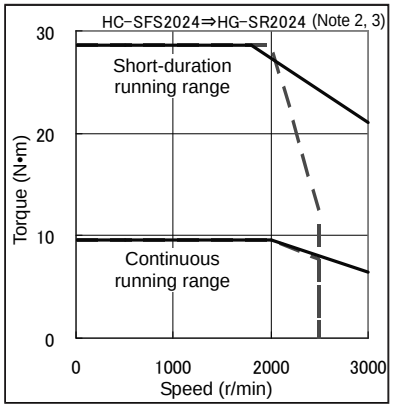

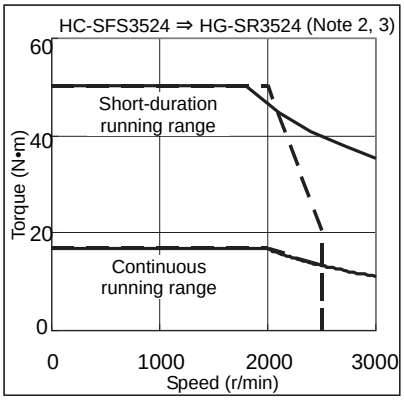

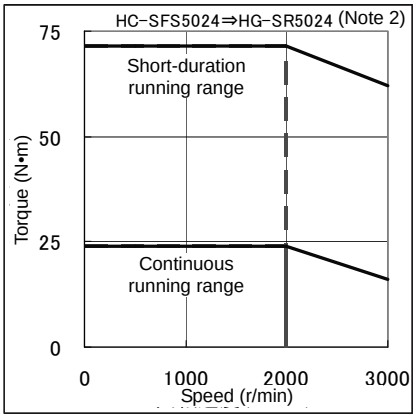

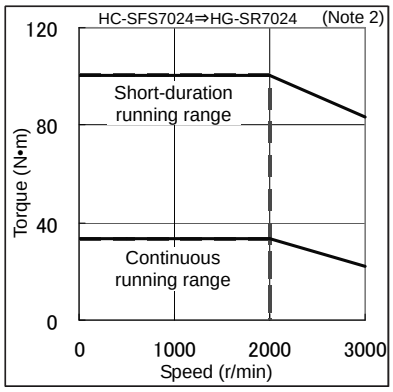

Note 1. The above torque characteristics are for 3-phase 400 V AC.
2. As for 3-phase 380 V AC, refer to the catalog or Instruction Manual.
3. Please contact your local sales office if the compatibility of torque characteristics is required.

◆ Comparison of torque characteristics between the HG-RR and HC-RFS series (—: HG-SR, ---: HC-RFS)

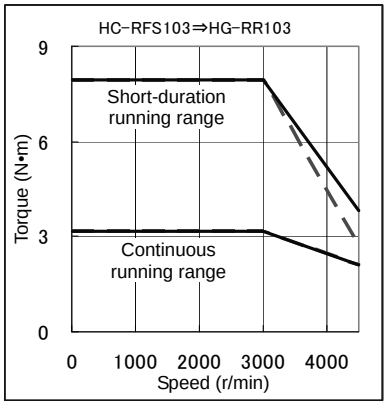

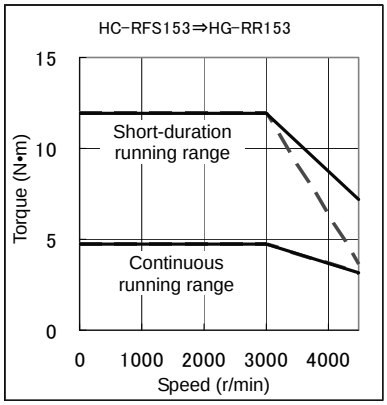

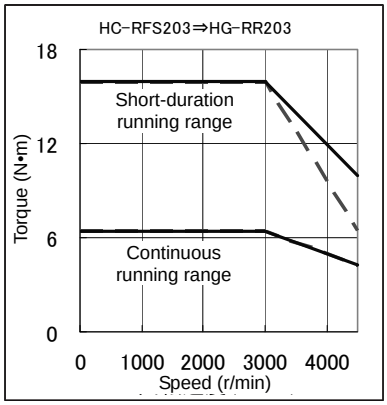

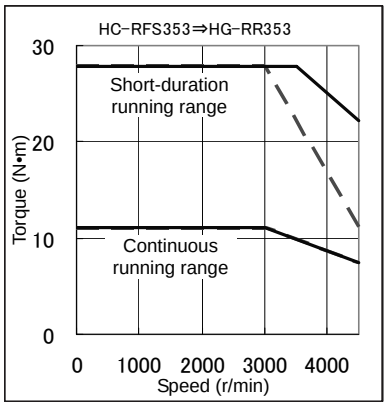

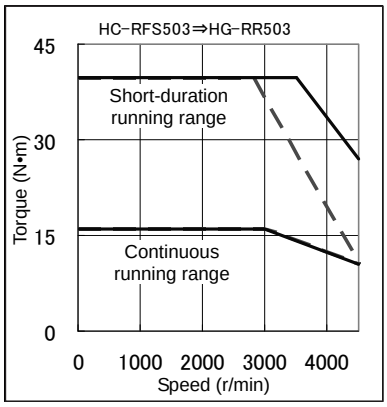

Note. The above torque characteristics are for 3-phase 200 V AC.

◆ Comparison of torque characteristics between the HG-JR and HC-LFS series (—: HG-JR, ---: HC-LFS)

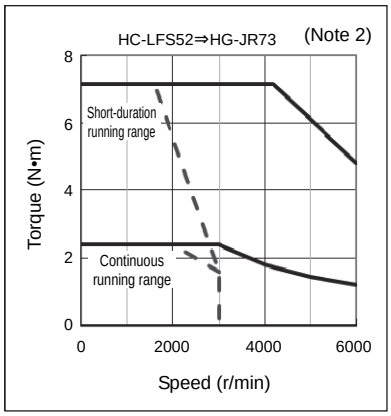

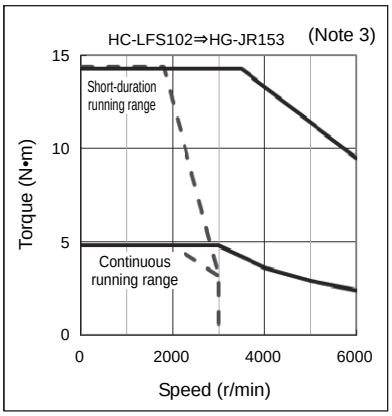

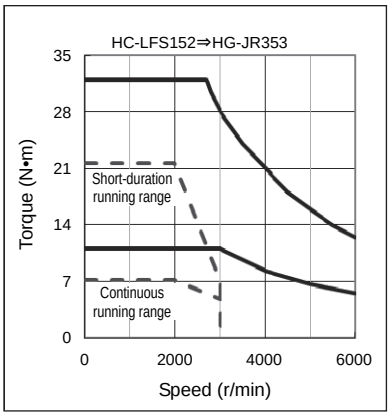

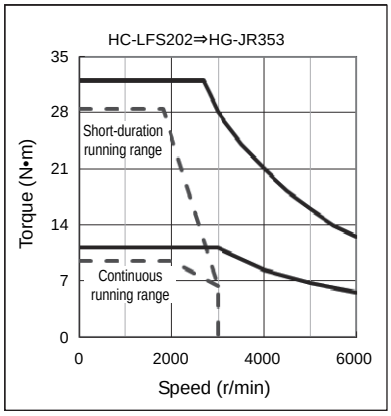

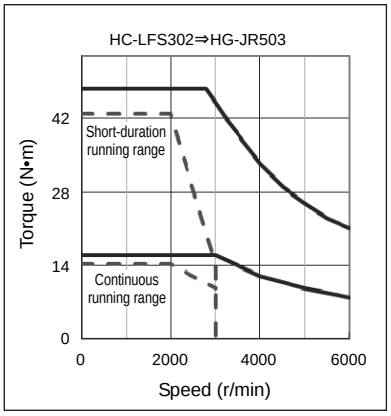

Note 1. The above torque characteristics are for 3-phase 200 V AC.
2. As for 1-phase 230 V AC, contact your local sales office.
3. Please contact your local sales office if the compatibility of torque characteristics is required.

◆ Comparison of torque characteristics between the HG-KR and HC-UFS series (—: HG-KR, ---:HC-UFS)

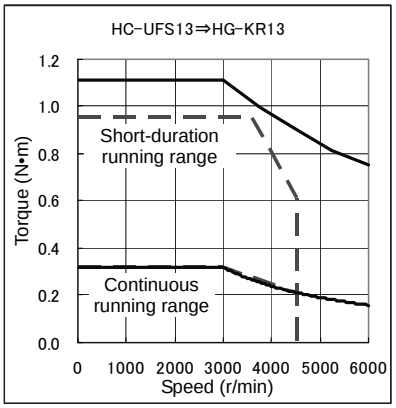

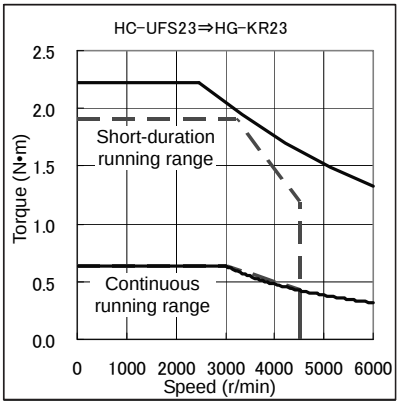

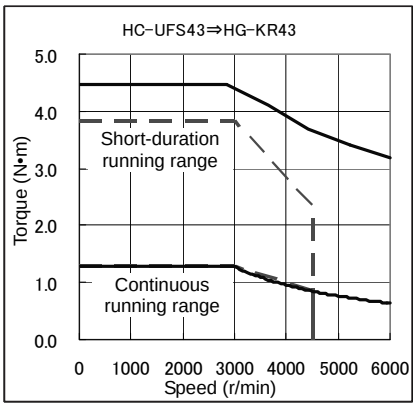

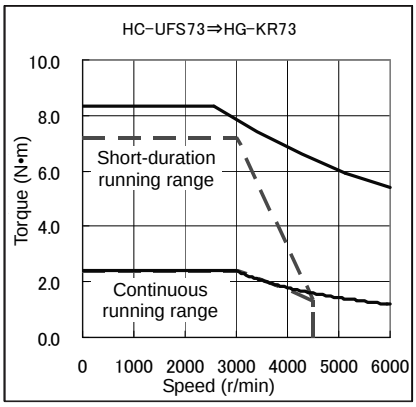

Note. The above torque characteristics are for 3-phase 200 V AC and 1-phase 230 V AC.

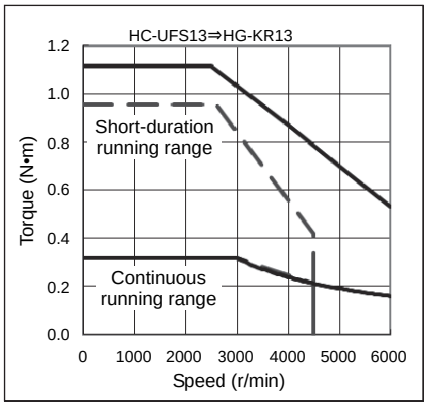

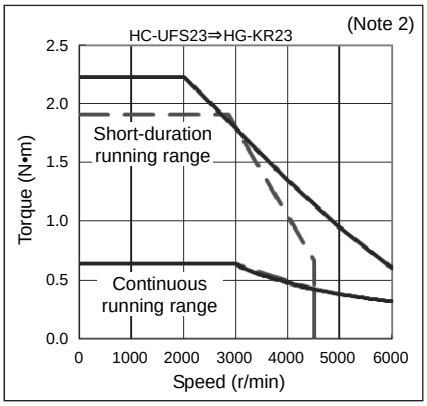

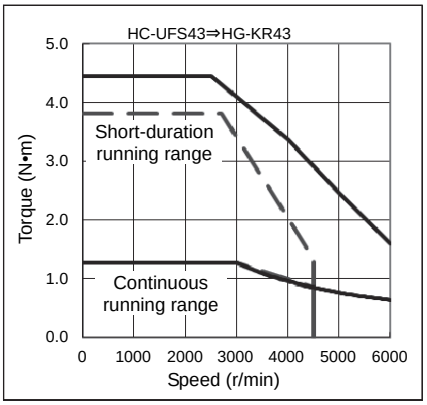

Note 1. The above torque characteristics are for 1-phase 100 V AC.
2. Please contact your local sales office if the compatibility of torque characteristics is required.

◆ Comparison of torque characteristics between the HG-UR and HC-UFS series (—: HG-UR, ---:HC-UFS)

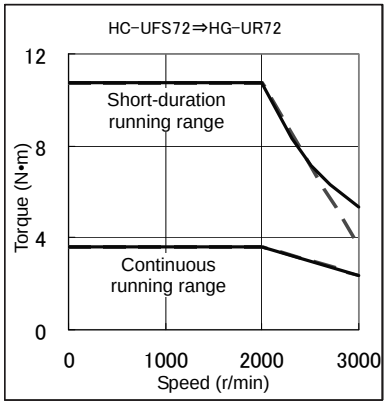

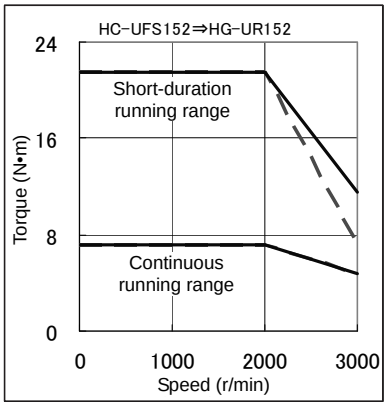

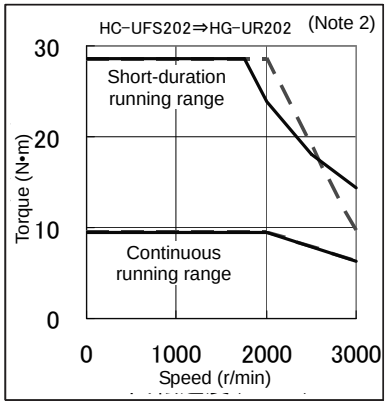

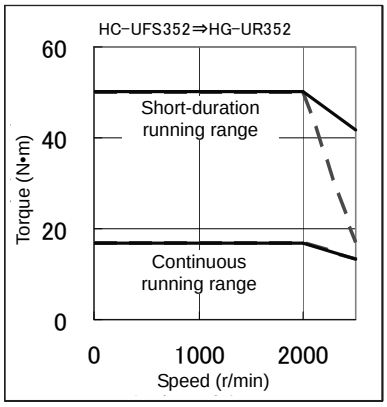

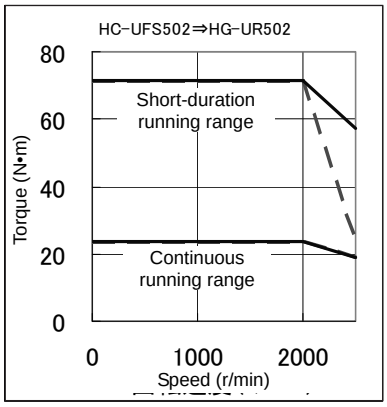

Note 1. The above torque characteristics are for 3-phase 200 V AC.
2. Please contact your local sales office if the compatibility of torque characteristics is required.

POINT

●When servo motors are replaced with HG-JR_R_-S_ motors (compatible product), the torque characteristics differ.
Please contact your local sales office.

◆ Comparison of torque characteristics between the HG-JR and HA-LFS series (—: HG-JR, ---: HA-LFS)

• HA-LFS: 1000 r/min series, 200 V class

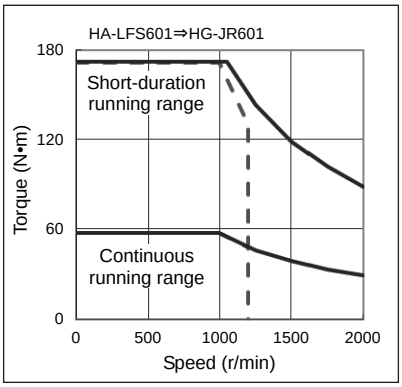

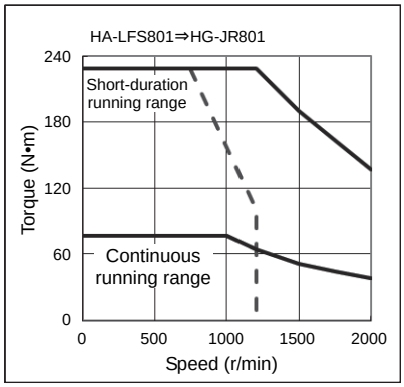

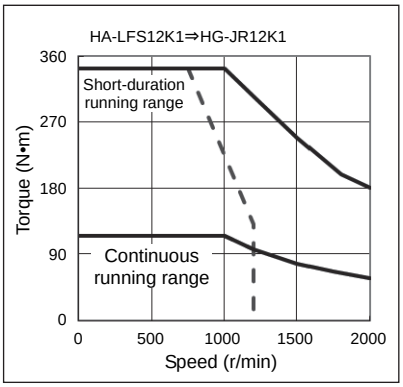

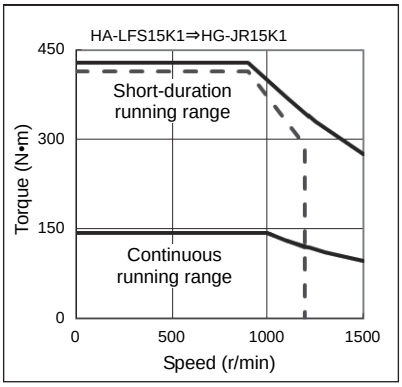

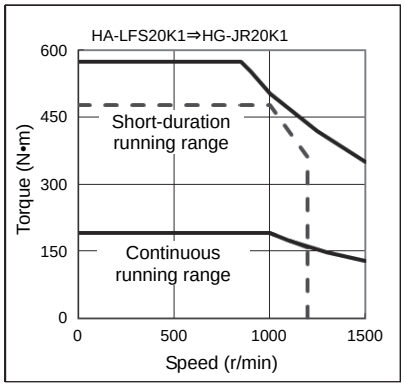

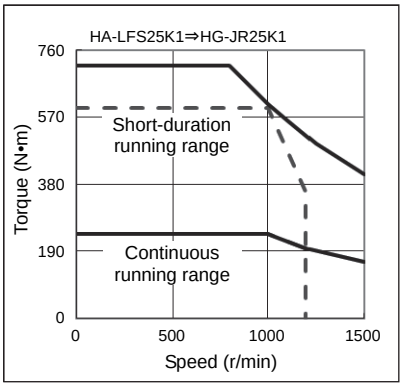

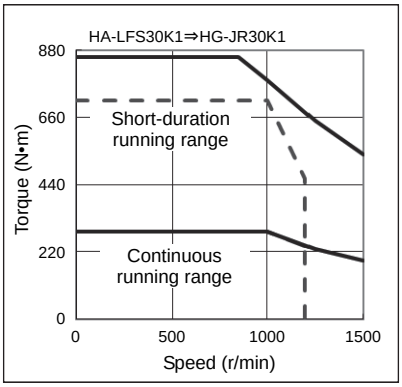

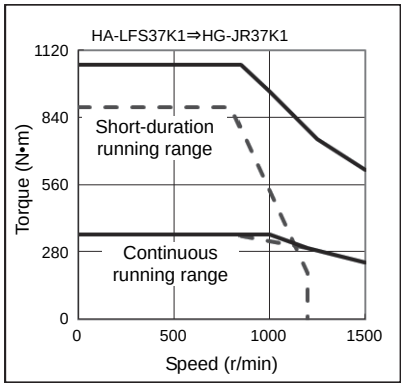

Note. The above torque characteristics are for 3-phase 200 V AC.

◆ Comparison of torque characteristics between the HG-JR and HA-LFS series (—: HG-JR, ---: HA-LFS)

• HA-LFS: 1000 r/min series, 400 V class

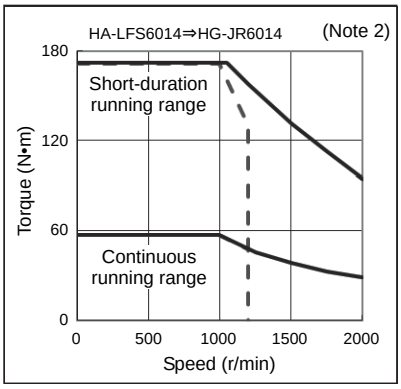

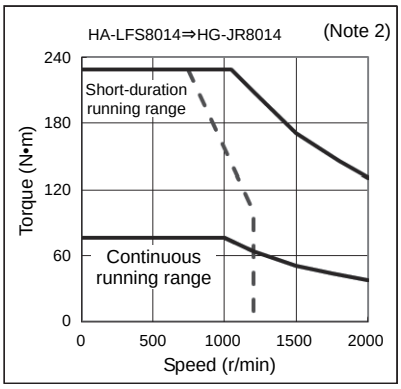

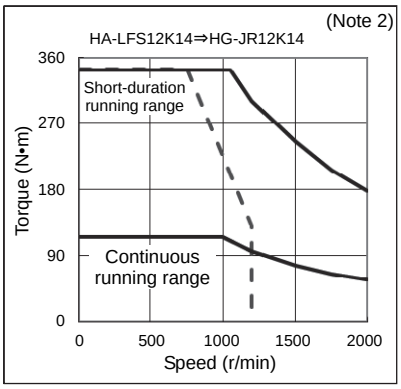

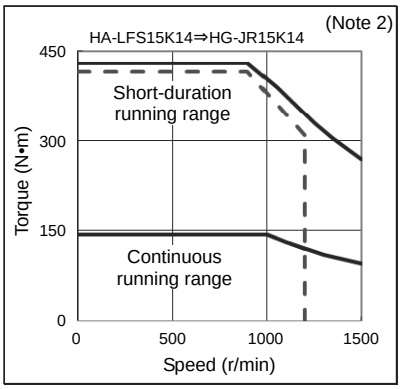

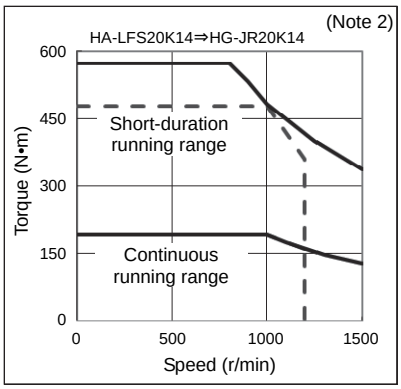

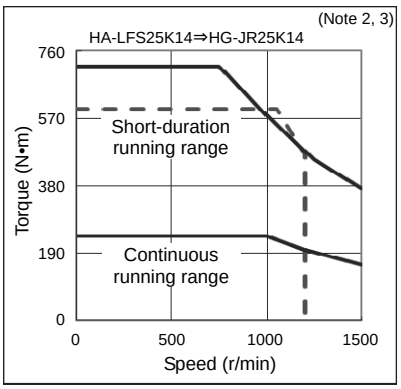

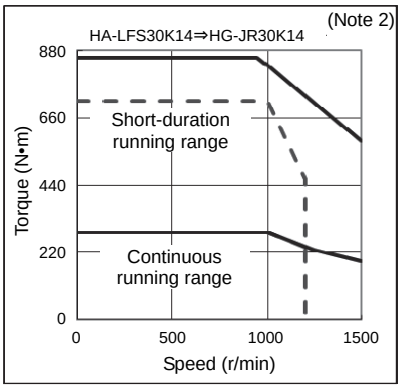

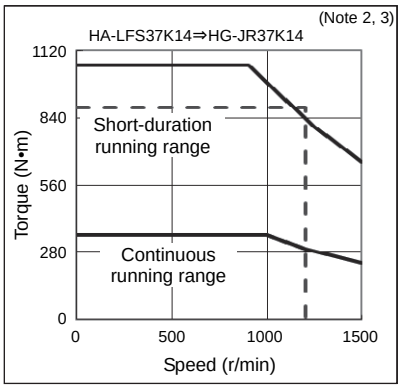

Note 1. The above torque characteristics are for 3-phase 400 V AC.
2. As for 3-phase 380 V AC, refer to the catalog or Instruction Manual.
3. Please contact your local sales office if the compatibility of torque characteristics is required.

◆ Comparison of torque characteristics between the HG-JR and HA-LFS series (—: HG-JR, ---: HA-LFS)

• HA-LFS: 1500 r/min series, 200 V class

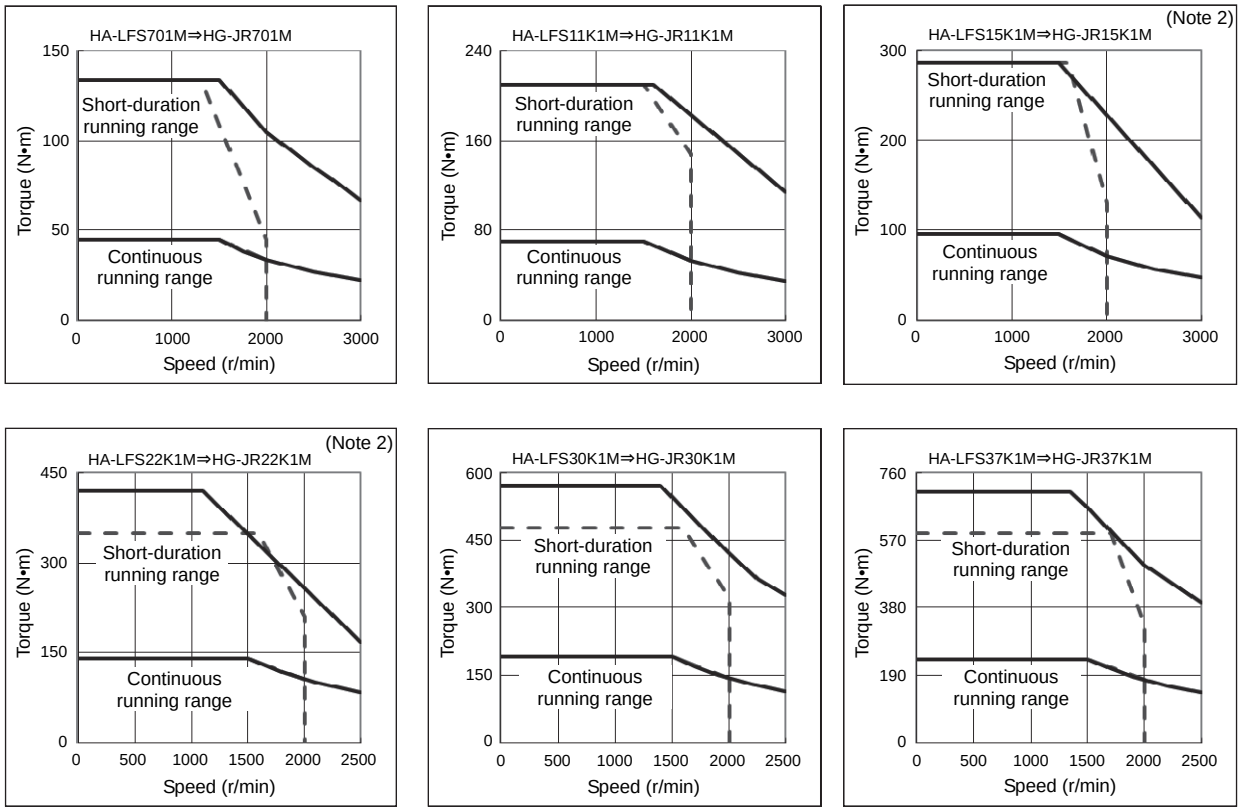

Note 1. The above torque characteristics are for 3-phase 200 V AC.

2. Please contact your local sales office if the compatibility of torque characteristics is required.

◆ Comparison of torque characteristics between the HG-JR and HA-LFS series (—: HG-JR, ---: HA-LFS)

• HA-LFS: 1500 r/min series, 400 V class

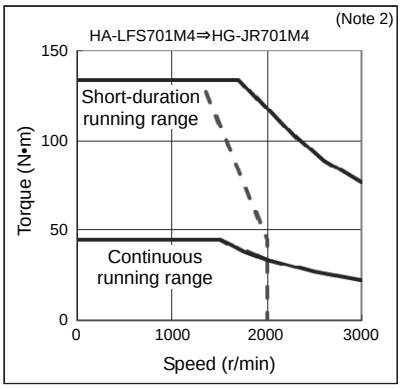

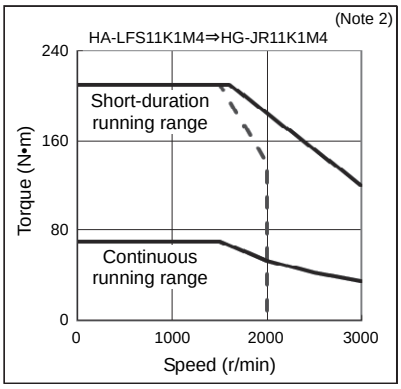

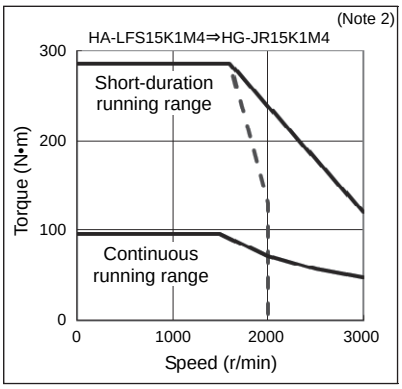

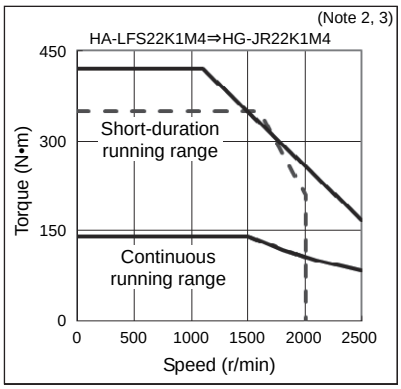

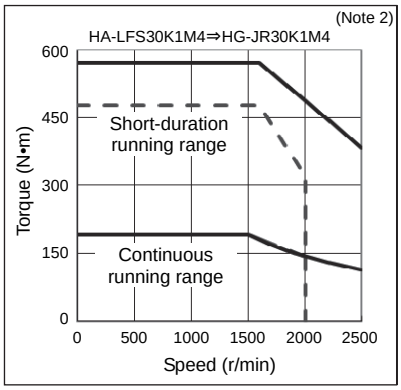

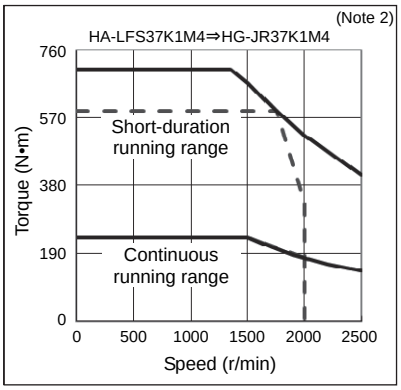

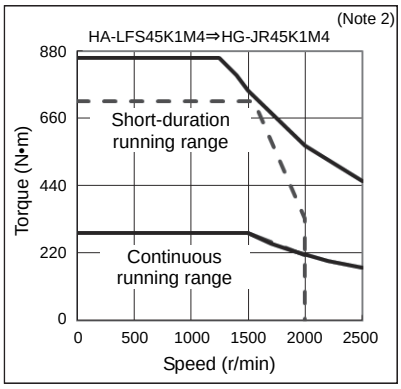

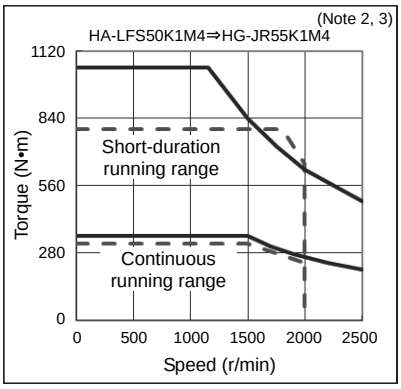

Note 1. The above torque characteristics are for 3-phase 400 V AC.
2. As for 3-phase 380 V AC, refer to the catalog or Instruction Manual.
3. Please contact your local sales office if the compatibility of torque characteristics is required.

◆ Comparison of torque characteristics between the HG-JR, SR and HA-LFS series (—: HG-JR/SR, ---: HA-LFS)

• HA-LFS: 2000 r/min series, 200 V class

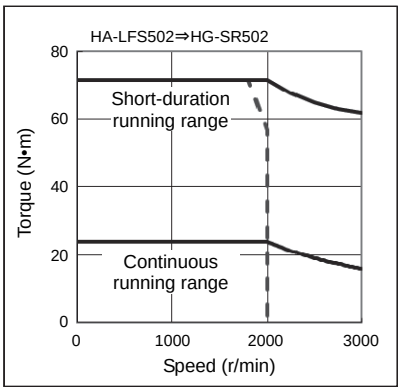

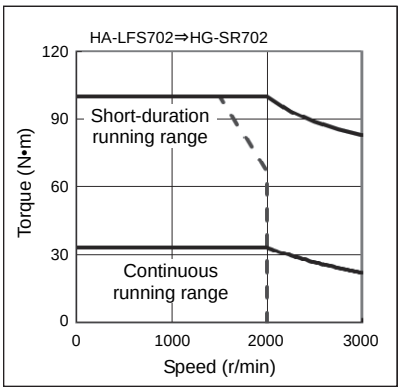

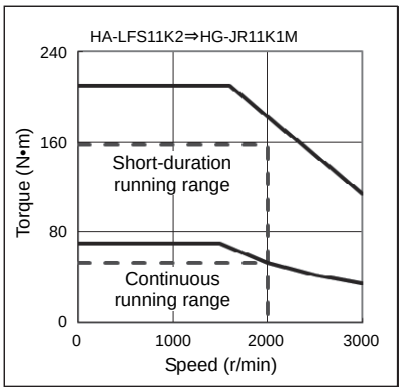

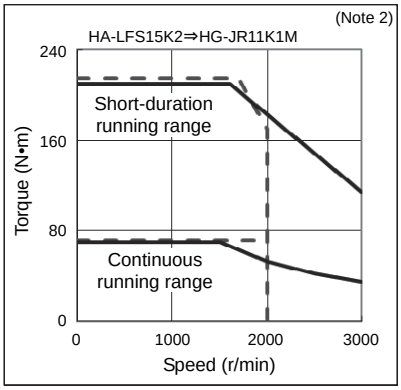

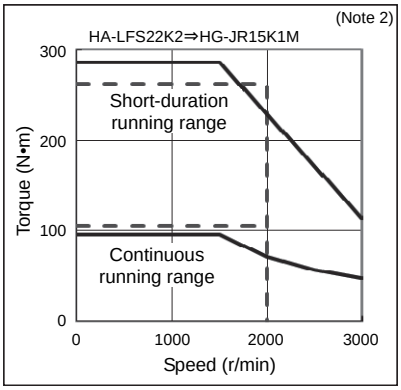

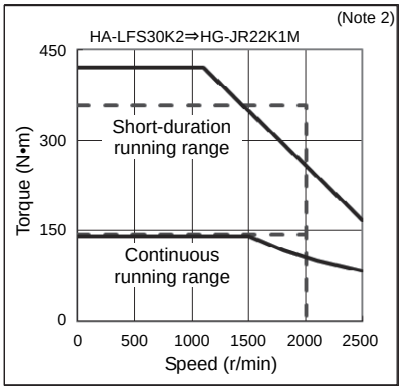

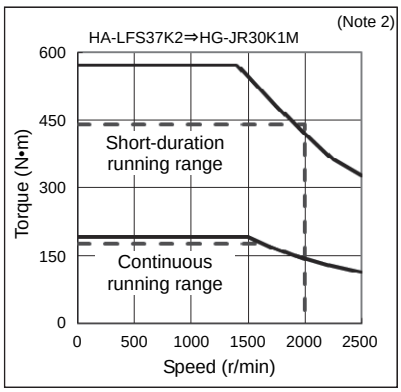

Note 1. The above torque characteristics are for 3-phase 200 V AC.

2. Please contact your local sales office if the compatibility of torque characteristics is required.

◆ Comparison of torque characteristics between the HG-JR and HA-LFS series (—: HG-JR, ---: HA-LFS)

• HA-LFS: 2000 r/min series, 400 V class

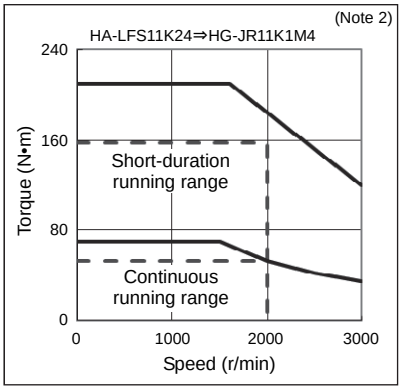

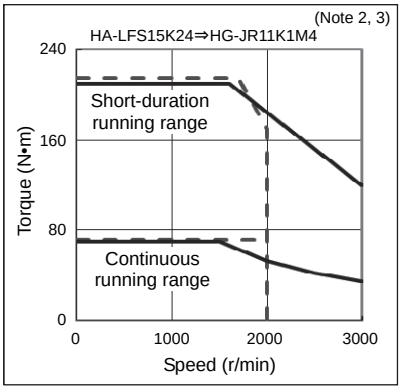

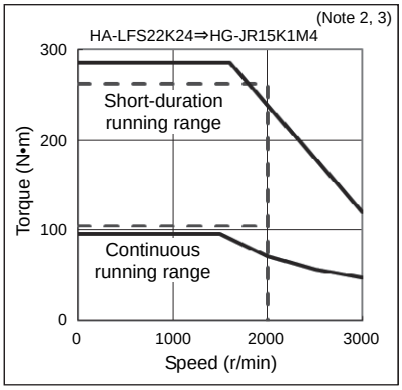

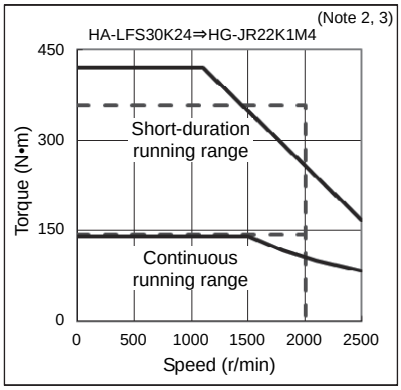

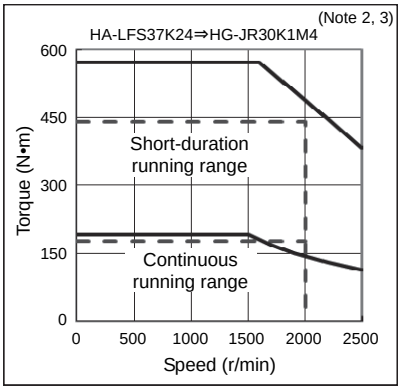

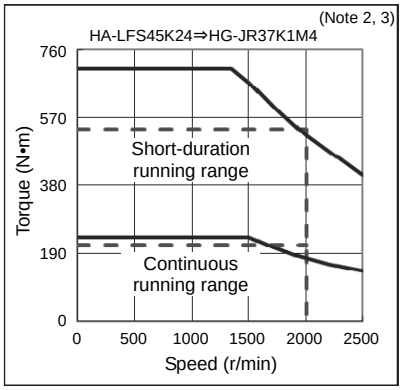

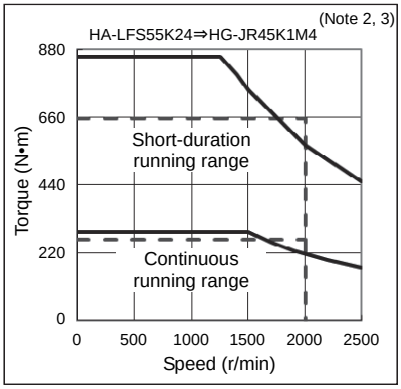

Note 1. The above torque characteristics are for 3-phase 400 V AC.
2. As for 3-phase 380 V AC, refer to the catalog or Instruction Manual.
3. Please contact your local sales office if the compatibility of torque characteristics is required.

MEMO

Part 9
Review on Replacement of Optional Peripheral Equipment

Part 9: Review on Replacement of Optional Peripheral Equipment

1. COMPARISON TABLE OF REGENERATIVE OPTION COMBINATIONS

POINT

- The MR-J4 series provides the new regenerative options shown in the table below.
- When an MR-J2S series regenerative resistor is used as it is with a servo motor combined, an alarm may occur. Be sure to use the regenerative resistor in the combination specified for the MR-J4 series.
- Do not use regenerative options newly provided by the MR-J4 series with the MR-J2S series because use of them causes an amplifier malfunction.

List of new regenerative options

Model	Regenerative option MR-RB		Accessory regenerative resistor
MR-J4-350_(-RJ)	3N	5N	
MR-J4-500_(-RJ)	31	51	
MR-J4-11K_(-RJ)	5R		GRZG400-0.8Ω × 4
MR-J4-15K_(-RJ)	9F		GRZG400-0.6Ω × 5
MR-J4-22K_(-RJ)	9T		GRZG400-0.5Ω × 5
MR-J4-60_4(-RJ)	1H-4	3M-4	
MR-J4-100_4(-RJ)	1H-4		
MR-J4-200_4(-RJ)	3G-4	5G-4	
MR-J4-500_4(-RJ)	34-4	54-4	
MR-J4-700_4(-RJ)	3U-4	5U-4	
MR-J4-11K_4(-RJ)	5K-4		GRZG400-2.5Ω × 4
MR-J4-15K_4(-RJ)	6K-4		GRZG400-2Ω × 5

1.1 Regenerative Options (200 V/100 V)

1.1.1 Combination and regenerative power for the MR-J2S series

List of regenerative options

Servo amplifier model	Built-in regenerative resistor [W]	Permissible regenerative power of regenerative option [W] MR-RB								
		032 [40 Ω]	12 [40 Ω]	30 [13 Ω]	3N [9 Ω]	31 [6.7 Ω]	32 [40 Ω]	(Note 1) 50 [13 Ω]	(Note 1) 5N [9 Ω]	(Note 1) 51 [6.7 Ω]
MR-J2S-10_(1)		30								
MR-J2S-20_(1)	10	30	100							
MR-J2S-40_(1)	10	30	100							
MR-J2S-60_	10	30	100							
MR-J2S-70_	20	30	100				300			
MR-J2S-100_	20	30	100				300			
MR-J2S-200_	100			300				500		
MR-J2S-350_	100			300				500		
MR-J2S-500_	130			300				500		
MR-J2S-700_	170					300				500
MR-J2S-11K_										
MR-J2S-15K_										
MR-J2S-22K_										
MR-J2S-30K_										
MR-J2S-37K_										

Servo amplifier model	Built-in regenerative resistor [W]	(Note 2) Standard accessories [External]	Permissible regenerative power of regenerative option [W] MR-RB							
			(Note 2) 5R [3.2 Ω]	(Note 2) 65 [8 Ω]	(Note 2) 66 [5 Ω]	(Note 2) 67 [4 Ω]	(Note 2) 9F [3 Ω]	(Note 2) 9T [2.5 Ω]	139 [1.3 Ω]	(Note 3) 137 [1.3 Ω]
MR-J2S-10_(1)										
MR-J2S-20_(1)	10									
MR-J2S-40_(1)	10									
MR-J2S-60_	10									
MR-J2S-70_	20									
MR-J2S-100_	20									
MR-J2S-200_	100									
MR-J2S-350_	100									
MR-J2S-500_	130									
MR-J2S-700_	170									
MR-J2S-11K_		GRZG400-2Ω × 4 500 (800)		500 (800)						
MR-J2S-15K_		GRZG400-1Ω × 5 850 (1300)			850 (1300)					
MR-J2S-22K_		GRZG400-0.8Ω × 5 850 (1300)				850 (1300)				
MR-J2S-30K_									1300	3900
MR-J2S-37K_									1300	3900

Note 1. Always install a cooling fan.
2. The values in the parentheses are applied to when a cooling fan is installed.
3. The value of MR-RB137 is a resultant resistance of three units.
4. Changed items are shown with shading.

1.1.2 Combination and regenerative power for the MR-J2M series

List of regenerative options

Servo amplifier model	Regenerative power [W]				
	Built-in regenerative resistor	MR-RB032 [40 Ω]	MR-RB14 [26 Ω]	MR-RB34 [26 Ω]	MR-RB54 [26 Ω]
MR-J2M-BU4		30	100	300	500
MR-J2M-BU6					
MR-J2M-BU8					

1.1.3 Combination and regenerative power for MR-J4 series (replacement model)

List of regenerative options

Servo amplifier model	Built-in regenerative resistor [W]	Permissible regenerative power of regenerative option [W] MR-RB								
		032 [40 Ω]	12 [40 Ω]	30 [13 Ω]	3N [9 Ω]	31 [6.7 Ω]	32 [40 Ω]	(Note 1) 50 [13 Ω]	(Note 1) 5N [9 Ω]	(Note 1) 51 [6.7 Ω]
MR-J4-10_(1)(-RJ)		30								
MR-J4-20_(1)(-RJ)	10	30	100							
MR-J4-40_(1)(-RJ)	10	30	100							
MR-J4-60_(-RJ)	10	30	100							
MR-J4-70_(-RJ)	20	30	100				300			
MR-J4-100_(-RJ)	20	30	100				300			
MR-J4-200_(-RJ)	100			300				500		
MR-J4-350_(-RJ)	100				300				500	
MR-J4-500_(-RJ)	130					300				500
MR-J4-700_(-RJ)	170					300				500
MR-J4-11K_(-RJ)										
MR-J4-15K_(-RJ)										
MR-J4-22K_(-RJ)										
MR-J4-DU30K_										
MR-J4-DU37K_										

Servo amplifier model	Built-in regenerative resistor [W]	(Note 2) Standard accessories [External]	Permissible regenerative power of regenerative option [W] MR-RB							
			(Note 2) 5R [3.2 Ω]	(Note 2) 65 [8 Ω]	(Note 2) 66 [5 Ω]	(Note 2) 67 [4 Ω]	(Note 2) 9F [3 Ω]	(Note 2) 9T [2.5 Ω]	139 [1.3 Ω]	(Note 5) 137 [1.3 Ω]
MR-J4-10_(1)(-RJ)										
MR-J4-20_(1)(-RJ)	10									
MR-J4-40_(1)(-RJ)	10									
MR-J4-60_(-RJ)	10									
MR-J4-70_(-RJ)	20									
MR-J4-100_(-RJ)	20									
MR-J4-200_(-RJ)	100									
MR-J4-350_(-RJ)	100									
MR-J4-500_(-RJ)	130									
MR-J4-700_(-RJ)	170									
MR-J4-11K_(-RJ)		GRZG400-0.8Ω × 4 500 (800)	500 (800)							
MR-J4-15K_(-RJ)		GRZG400-0.6Ω × 5 850 (1300)					850 (1300)			
MR-J4-22K_(-RJ)		GRZG400-0.5Ω × 5 850 (1300)						850 (1300)		
MR-J4-DU30K_									1300	3900
MR-J4-DU37K_									1300	3900

Note 1. Always install a cooling fan.
2. The values in the parentheses are applied to when a cooling fan is installed.
3. When using a combination with an MR-J4 servo amplifier other than the standard one, contact your local sales office.
4. A shaded cell in the list shows a combination changed from "MR-J2S series".
5. The value of MR-RB137 is a resultant resistance of three units connected.

Parameter settings (PA02 for MR-J4) may be required depending on the regenerative option model. Refer to the Instruction Manual for details.

1.2 External Form Comparison

	MR-J2S	MR-J4
350_ 500_	MR-RB30 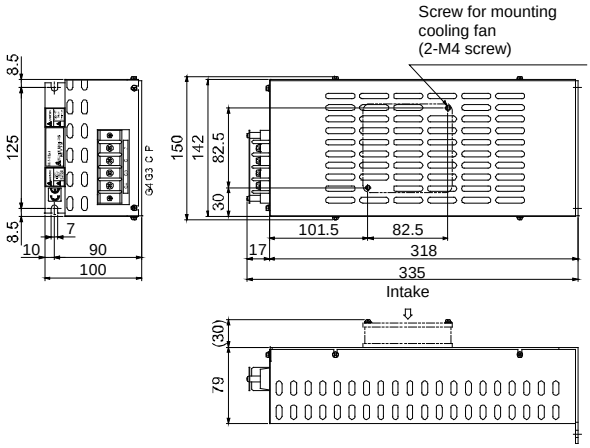	MR-RB31/MR-RB3N 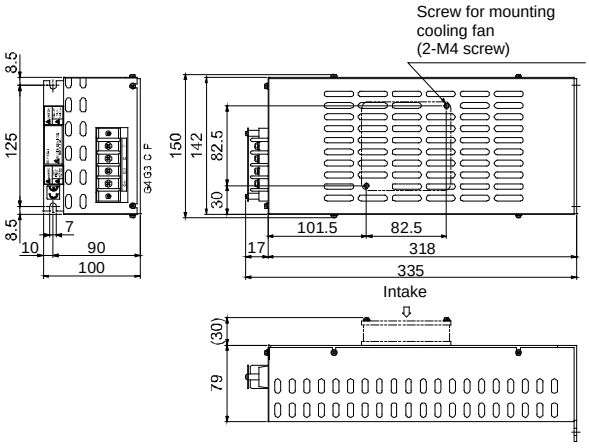
350_ 500_	MR-RB50 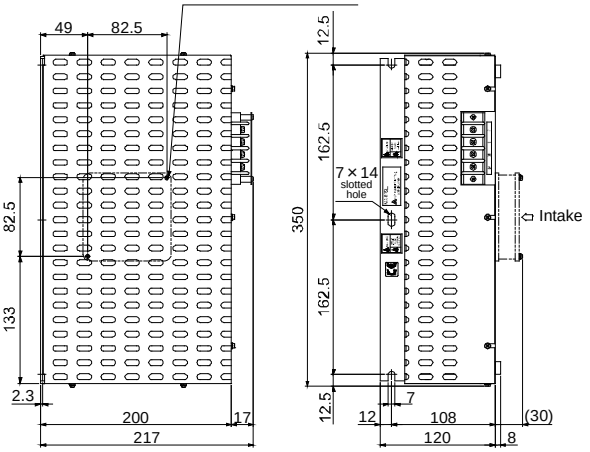	MR-RB51/MR-RB5N 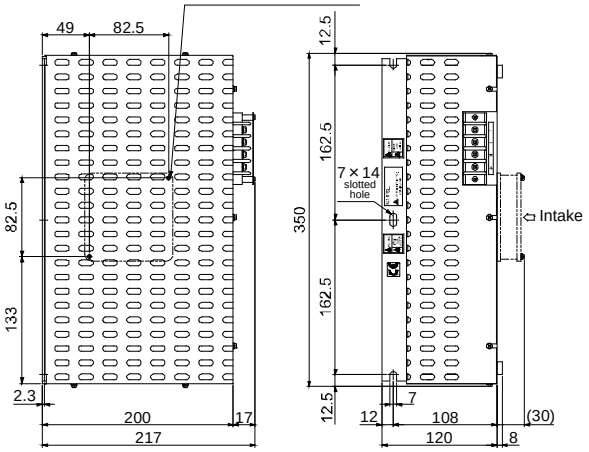
11K_ 15K_ 22K_ 30K_ 37K_	MR-RB65/MR-RB66/MR-RB67/MR-RB139/MR-RB137 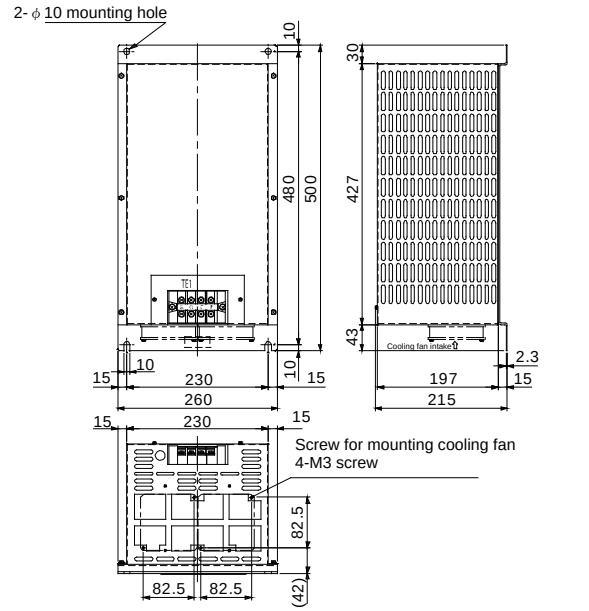	MR-RB5R/MR-RB9F/MR-RB9T/MR-RB139/MR-RB137 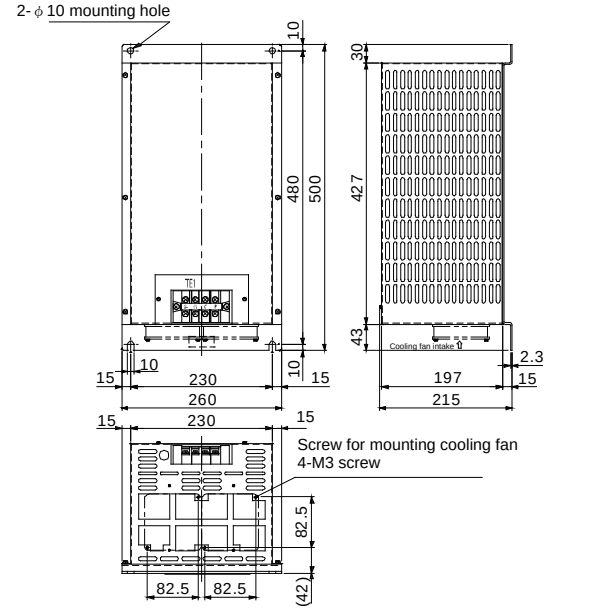

1.3 Regenerative Options (400 V class)

1.3.1 Combination and regenerative power for the MR-J2S series

List of regenerative options

Servo amplifier model	Built-in regenerative resistor [W]	Permissible regenerative power of regenerative option [W] MR-RB										
		1H-4 [82 Ω]	1L-4 [270 Ω]	(Note 1) 3M-4 [120 Ω]	(Note 1) 3H-4 [80 Ω]	(Note 1) 3G-4 [47 Ω]	(Note 1) 34-4 [26 Ω]	(Note 1) 3U-4 [22 Ω]	(Note 1) 5H-4 [80 Ω]	(Note 1) 5G-4 [47 Ω]	(Note 1) 54-4 [26 Ω]	(Note 1) 5U-4 [22 Ω]
MR-J2S-60_4	30		100									
MR-J2S-100_4	100			300								
MR-J2S-200_4	100				300				500			
MR-J2S-350_4	100					300				500		
MR-J2S-500_4	130					300				500		
MR-J2S-700_4	170						300				500	
MR-J2S-11K_4												
MR-J2S-15K_4												
MR-J2S-22K_4												
MR-J2S-30K_4												
MR-J2S-37K_4												
MR-J2S-45K_4												
MR-J2S-55K_4												

Servo amplifier model	Built-in regenerative resistor [W]	(Note 2) Standard accessories [External]	Permissible regenerative power of regenerative option [W] MR-RB					
			(Note 2) 5K-4 [10 Ω]	(Note 2) 6B-4 [20 Ω]	(Note 2) 60-4 [12.5 Ω]	(Note 2) 6K-4 [10 Ω]	136-4 [5 Ω]	(Note 3) 138-4 [5 Ω]
MR-J2S-60_4	30							
MR-J2S-100_4	100							
MR-J2S-200_4	100							
MR-J2S-350_4	100							
MR-J2S-500_4	130							
MR-J2S-700_4	170							
MR-J2S-11K_4		GRZG400-5Ω × 4 500 (800)		500 (800)				
MR-J2S-15K_4		GRZG400-2.5Ω × 5 850 (1300)			850 (1300)			
MR-J2S-22K_4		GRZG400-2Ω × 5 850 (1300)				850 (1300)		
MR-J2S-30K_4							1300	3900
MR-J2S-37K_4							1300	3900
MR-J2S-45K_4							1300	3900
MR-J2S-55K_4							1300	3900

Note 1. Always install a cooling fan.
2. The values in the parentheses are applied to when a cooling fan is installed.
3. The value of MR-RB138-4 is a resultant resistance of three units.
4. Changed items are shown with shading. Changed items are shown with shading.

1.3.2 Combination and regenerative power for MR-J4 series (replacement model)

List of regenerative options

Servo amplifier model	Built-in regenerative resistor [W]	Permissible regenerative power of regenerative option [W] MR-RB										
		1H-4 [82 Ω]	1L-4 [270 Ω]	(Note 1) 3M-4 [120 Ω]	(Note 1) 3H-4 [80 Ω]	(Note 1) 3G-4 [47 Ω]	(Note 1) 34-4 [26 Ω]	(Note 1) 3U-4 [22 Ω]	(Note 1) 5H-4 [80 Ω]	(Note 1) 5G-4 [47 Ω]	(Note 1) 54-4 [26 Ω]	(Note 1) 5U-4 [22 Ω]
MR-J4-60_4(-RJ)	15	100		300								
MR-J4-100_4(-RJ)	15	100		300								
MR-J4-200_4(-RJ)	100					300				500		
MR-J4-350_4(-RJ)	100					300				500		
MR-J4-500_4(-RJ)	130						300				500	
MR-J4-700_4(-RJ)	170							300				500
MR-J4-11K_4(-RJ)												
MR-J4-15K_4(-RJ)												
MR-J4-22K_4(-RJ)												
MR-J4-DU30K_4												
MR-J4-DU37K_4												
MR-J4-DU45K_4												
MR-J4-DU55K_4												

Servo amplifier model	Built-in regenerative resistor [W]	(Note 2) Standard accessories [External]	Permissible regenerative power of regenerative option [W] MR-RB					
			(Note 2) 5K-4 [10 Ω]	(Note 2) 6B-4 [20 Ω]	(Note 2) 60-4 [12.5 Ω]	(Note 2) 6K-4 [10 Ω]	137-4 [4 Ω]	(Note 4) 13V-4 [4 Ω]
MR-J4-60_4(-RJ)	15							
MR-J4-100_4(-RJ)	15							
MR-J4-200_4(-RJ)	100							
MR-J4-350_4(-RJ)	100							
MR-J4-500_4(-RJ)	130							
MR-J4-700_4(-RJ)	170							
MR-J4-11K_4(-RJ)		GRZG400-2.5Ω × 4 500 (800)	500 (800)					
MR-J4-15K_4(-RJ)		GRZG400-2Ω × 5 850 (1300)				850 (1300)		
MR-J4-22K_4(-RJ)		GRZG400-2Ω × 5 850 (1300)				850 (1300)		
MR-J4-DU30K_4							1300	3900
MR-J4-DU37K_4							1300	3900
MR-J4-DU45K_4							1300	3900
MR-J4-DU55K_4							1300	3900

Note 1. Always install a cooling fan.
2. The values in the parentheses are applied to when a cooling fan is installed.
• Changed items are shown with shading.
• Parameter settings (PA02 for MR-J4) may be required depending on the regenerative option model. Refer to the Instruction Manual for details.
3. When using a combination with an MR-J4 servo amplifier other than the standard one, contact your local sales office.
4. The value of MR-RB13V-4 is a resultant resistance of three units connected in parallel.

1.4 External Form Comparison

	MR-J2S	MR-J4
60_4 100_4	MR-RB1L-4 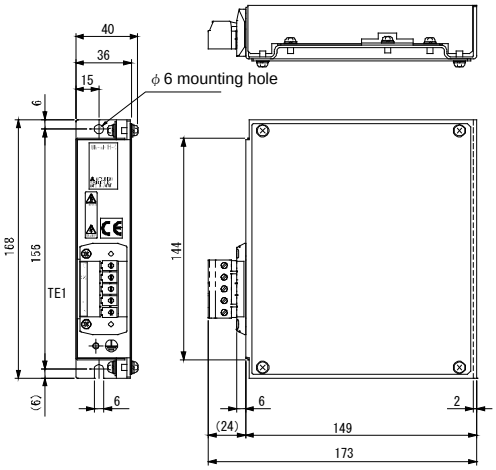	MR-RB1H-4 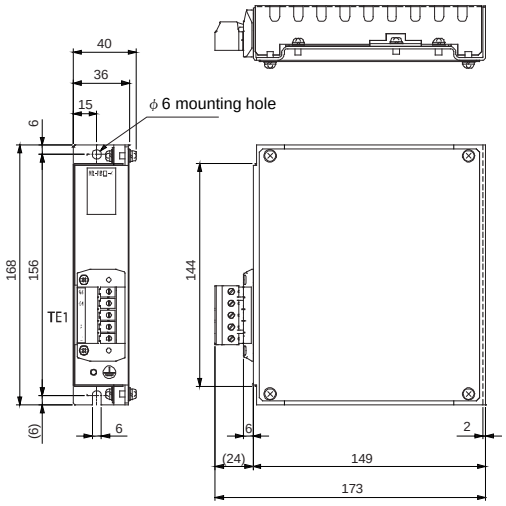 MR-RB3M-4 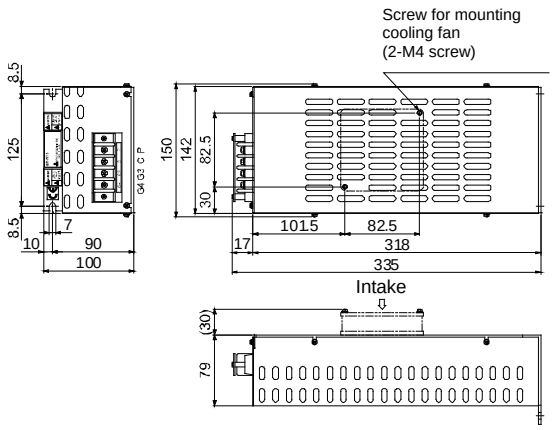
60_4 200_4 500_4 700_4	MR-RB3H-4/MR-RB3G-4/MR-RB34-4 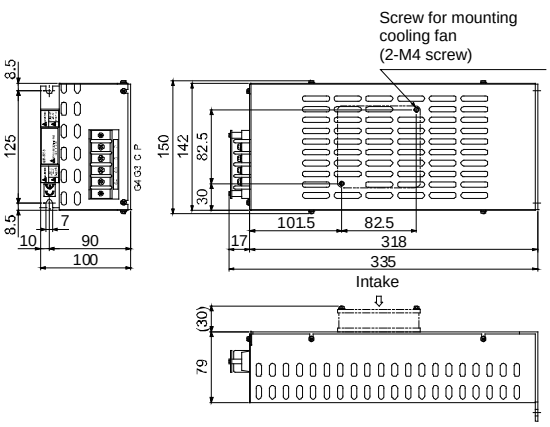	MR-RB3G-4/MR-RB34-4/MR-RB3U-4 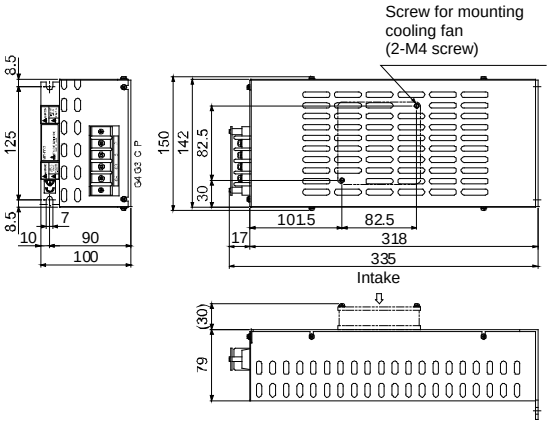

	MR-J2S	MR-J4
200_4 500_4 700_4	MR-RB5H-4/MR-RB5G-4/MR-RB54-4 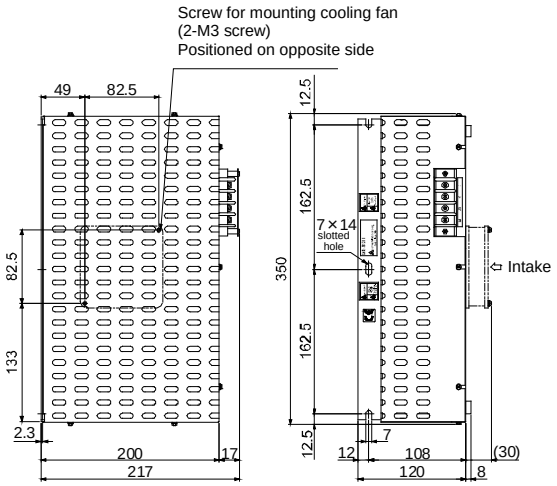 	MR-RB5G-4/MR-RB54-4/MR-RB5U-4 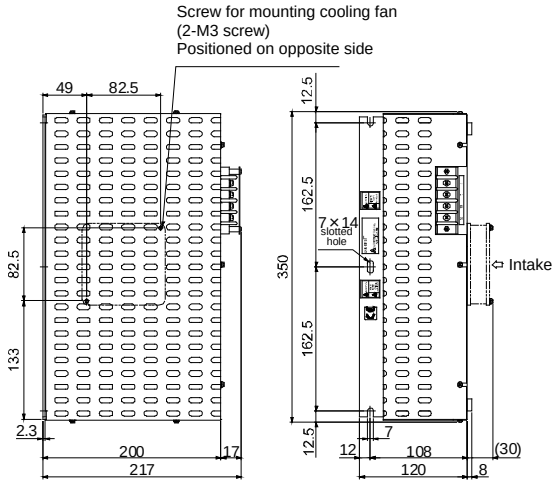
11K_4 15K_4 30K_4 37K_4 45K_4 55K_4	MR-RB6B-4/MR-RB60-4 MR-RB136-4/MR-RB138-4 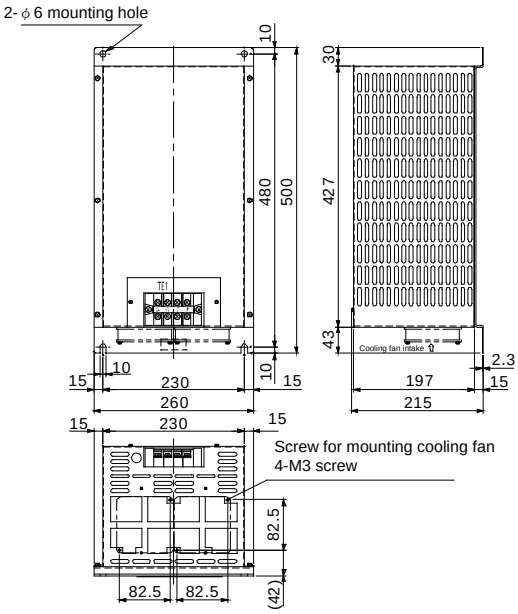 	MR-RB5K-4/MR-RB6K-4 MR-RB137-4/MR-RB13V-4 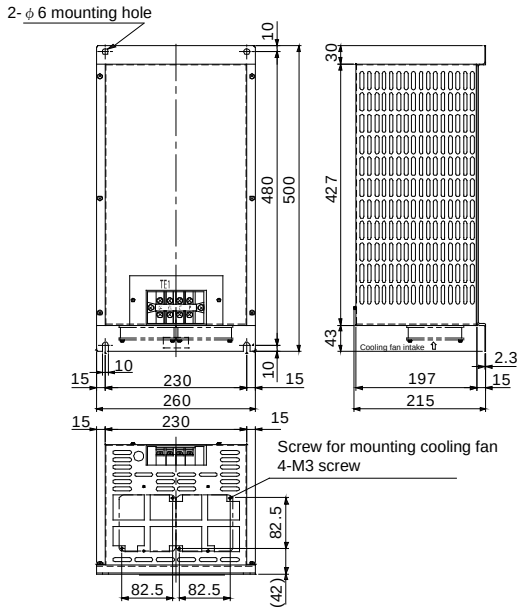

2. COMPARISON TABLE OF DYNAMIC BRAKE OPTION COMBINATIONS

POINT

- When an MR-J4-22K servo amplifier and an HG-JR22K1M servo motor are combined, the coasting distance will be longer. Therefore, use a dynamic brake option, DBU-22K-R1.

Dynamic brake option combination

Model	Applicable servo amplifier	
DBU-11K	MR-J2S-11K_	MR-J4-11K_
DBU-15K	MR-J2S-15K_	MR-J4-15K_
DBU-22K	MR-J2S-22K (Note)	
DBU-22K-R1		MR-J4-22K_
DBU-37K	MR-J2S-30K_ MR-J2S-37K_	
DBU-37K-R1		MR-J4-DU30K_ MR-J4-DU37K_
DBU-11K-4	MR-J2S-11K_4	MR-J4-11K_4
DBU-22K-4	MR-J2S-15K_4 MR-J2S-22K_4	MR-J4-15K_4 MR-J4-22K_4
DBU-55K-4	MR-J2S-30K_4 MR-J2S-37K_4 MR-J2S-45K_4 MR-J2S-55K_4	
DBU-55K-4-R5		MR-J4-DU30K_4 MR-J4-DU37K_4 MR-J4-DU45K_4 MR-J4-DU55K_4

Changed items are shown with shading.

Note. DBU-22K can be used when MR-J4-22K_ is combined with an HA-LFS22K1M servo motor.

2.1 External Form Comparison

	MR-J2S	MR-J4
22K_	DBU-22K	DBU-22K-R1

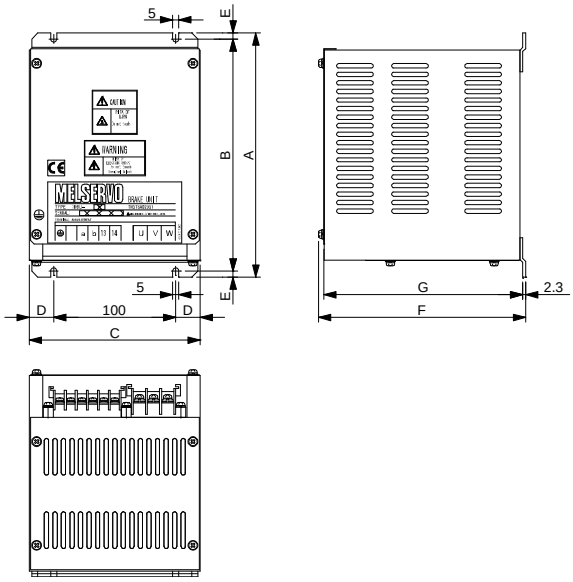

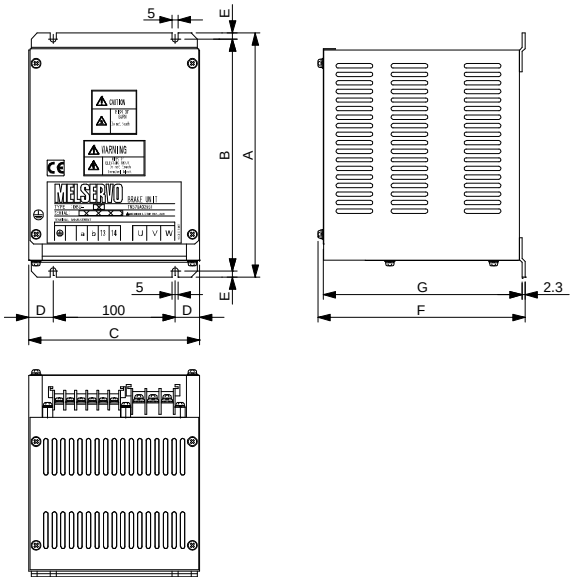

Dynamic brakes	A	B	C	D	E	F	G	Mass [kg]
DBU-22K	250	238	150	25	6	235	228	6
DBU-22K-R1	250	238	150	25	6	235	228	6

	MR-J2S	MR-J4
30K_ 37K_ 30K_4 37K_4 45K_4 55K_4	DBU-37K/DBU-55K-4	DBU-37K-R1/DBU-55K-4-R5

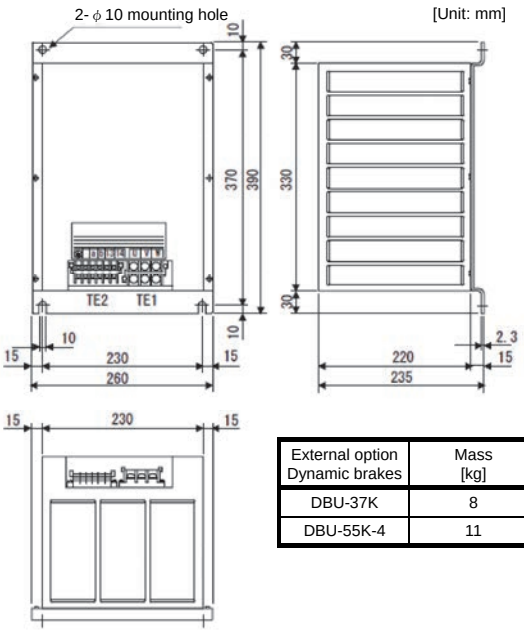

External option Dynamic brakes	Mass [kg]
DBU-37K	8
DBU-55K-4	11

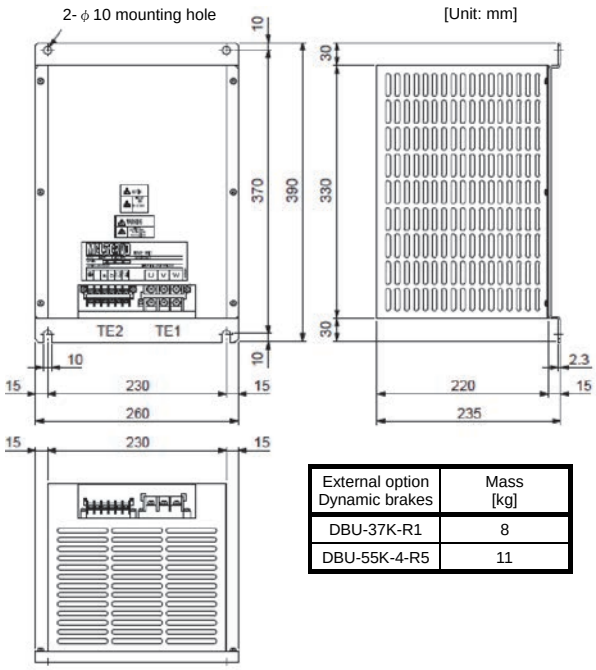

External option Dynamic brakes	Mass [kg]
DBU-37K-R1	8
DBU-55K-4-R5	11

3. COMPARISON TABLE OF CABLE OPTION COMBINATIONS

Cable option combinations

Application		MR-J2S series	MR-J4 series		Note
Encoder cable		MR-JCCBL_M-_	MR-J3ENCBL_M-A_-_ MR-J3JCBL03M-A_-L MR-EKCBL_M-_		Connector shape will be changed. Cable must be changed. _M: Cable length A_: Leading direction -_: Bending life
		MR-JHSCBL_M-_	MR-J3JSCBL03M-A_-L MR-ENECBL_M-H(-MTH)		MR-ENECBL_M-H-MTH is required when using 15 kW or more HG-JR 1000 r/min series or 22 kW or more HG-JR 1500 r/min series. _M: Cable length A_: Leading direction
		MR-ENCBL_M-H			
Encoder connector set		MR-J2CNM	MR-ECNM		MR-ENECNS is required when using 15 kW or more HG-JR 1000 r/min series or 22 kW or more HG-JR 1500 r/min series. _: Encoder side connector shape
		MR-J2CNS	MR-J3SCNS_ MR-ENCNS2_ MR-ENECNS		
		MR-ENCNS			
Controller to amplifier cable	SSCNET interface	MR-J2HBUS_M(-A) Q172J2BCBL_M_ Q173J2B_CBL_M	MR-J3BUS_M-_		Connector will be changed due to change from metal communication to optical communication. _: Cable length -_: Bending life
CN1 connector set		MR-J2CN1-A	MR-J3BCN1		
Cable for I/O signals			MR-J2HBUS_M		_: Cable length
CN3 connector set			MR-CCN1		
Junction terminal block cable	General-purpose interface	MR-J2TBL_M	MR-J2M-CN1TBL_M		Connector shape and the number of pin poles will be changed. _: Cable length
CN1 connector set		MR-J2CN1	MR-J3CN1		
Junction terminal block		MR-TB20	MR-TB50		
Servo motor power supply cable			MR-PWS1CBL_M-A_-_		Cable options are available for MR-J4. _M: Cable length A_: Leading direction -_: Bending life
			MR-PWS2CBL03M-A_-L		
Power connector set (Servo motor side power connector)		MR-PWCNK_ MR-PWCNS_	MR-PWCNS_		Connector shape will be changed. _: Differ depends on the applied motor.
Electromagnetic brake cable			MR-BKS1CBL_M-A_-_		Cable options are available for MR-J4. _M: Cable length A_: Leading direction -_: Bending life
			MR-BKS2CBL03M-A_-L		
Electromagnetic brake connector set		MR-BKCN	MR-BKCNS1_ MR-BKCNS2_ MR-BKCN		Connector shape will be changed. _: Connector shape
Servo amplifier power connector (1 kW or less)			06JFAT-SAXGDK-H7.5 (Note)	CNP1	Change from screw-type to connector-type
			05JFAT-SAXGDK-H5.0 (Note)	CNP2	
			03JFAT-SAXGDK-H7.5 (Note)	CNP3	
Servo amplifier power connector (2 kW)			06JFAT-SAXGFK-XL (Note)	CNP1	
			05JFAT-SAXGDK-H5.0 (Note)	CNP2	
			03JFAT-SAXGFK-XL (Note)	CNP3	
Servo amplifier power connector (3.5 kW)			06JFAT-SAXGFK-XL (Note)	CNP1	
			05JFAT-SAXGDK-H5.0 (Note)	CNP2	
			03JFAT-SAXGFK-XL (Note)	CNP3	
CN3 communication cable		MR-CPCATCBL3M	MR-J3USBCBL3M		Change from RS-232C communication to USB communication

Note. Manufactured by JST

4. POWER SUPPLY WIRE SIZE

POINT
●When using the existing cables, refer to "[Appendix 2] Introduction to Renewal Tool".

4.1 Selection of Power Supply Wire Size (Example)

4.1.1 MR-J2S-series power supply wire size

The following diagram shows the wires used for wiring. Use the wires given in this section or equivalent.

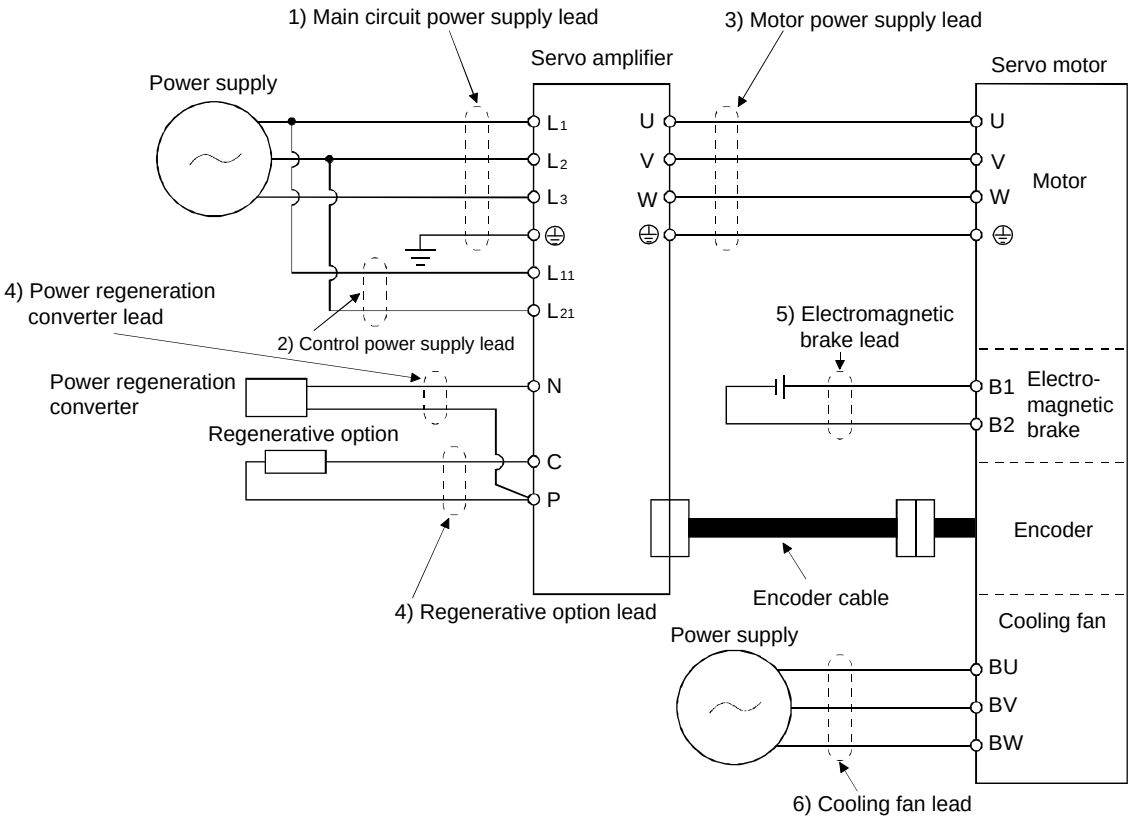

In this case, the power supply wire used is a 600 V plastic one and the wiring distance is 30 m or less.
When the wiring distance exceeds 30 m, select another wire size in consideration of the voltage drop.
The alphabet letters (a, b, c) on the table correspond to crimp terminals used when wiring a servo amplifier.
The method of wiring a servo motor differs depending on the type and capacity of the servo motor.
To comply with the UL/cUL (CSA) standard, use UL-approved copper wires rated at 60˚C or higher for wiring.

Wire size selection example 1 (IV wire)

Recommended wire

<table>
<tr><th rowspan="2">Servo amplifier</th><th colspan="6">Power supply wire [mm²] (Note 1)</th></tr>
<tr><th>1) L1/L2/L3/⏚</th><th>2) L11/L21</th><th>3) U/V/W/P1/P/⏚</th><th>4) P/C</th><th>5) B1/B2</th><th>6) BU/BV/BW</th></tr>
<tr><td>MR-J2S-10_(1)</td><td rowspan="6">2 (AWG14): a</td><td rowspan="10">1.25(AWG16)</td><td rowspan="5">1.25 (AWG16): a</td><td rowspan="9">2 (AWG14): a</td><td rowspan="10">1.25 (AWG16)</td><td rowspan="9"></td></tr>
<tr><td>MR-J2S-20_(1)</td></tr>
<tr><td>MR-J2S-40_(1)</td></tr>
<tr><td>MR-J2S-60_</td></tr>
<tr><td>MR-J2S-70_</td></tr>
<tr><td>MR-J2S-100_</td><td>2 (AWG14): a</td></tr>
<tr><td>MR-J2S-200_</td><td>3.5 (AWG12): b</td><td>3.5 (AWG12): b</td></tr>
<tr><td>MR-J2S-350_</td><td rowspan="2">5.5 (AWG10): b</td><td>(Note 2) 5.5 (AWG10): b</td></tr>
<tr><td>MR-J2S-500_</td><td>5.5 (AWG10): b</td></tr>
<tr><td>MR-J2S-700_</td><td>8 (AWG8): c</td><td>8 (AWG8): c</td><td>3.5 (AWG12): b</td></tr>
<tr><td>MR-J2S-11K_</td><td>14 (AWG6): d</td><td>22 (AWG4): e</td><td rowspan="3">5.5 (AWG10): b</td><td rowspan="3">2 (AWG14)</td></tr>
<tr><td>MR-J2S-15K_</td><td>22 (AWG4): e</td><td>30 (AWG2): f</td></tr>
<tr><td>MR-J2S-22K_</td><td>50 (AWG1/0): g</td><td>60 (AWG2/0): g</td></tr>
</table>

Note 1. For details on crimp terminals and applicable tools, refer to section 4.2.1 (1) of this document.
2. When an HC-RFS203 servo motor is used, the value will be 3.5 mm².

Recommended wire

<table>
<tr><th rowspan="2">Servo amplifier</th><th colspan="6">Power supply wire [mm²] (Note 1)</th></tr>
<tr><th>1) L1/L2/L3/⏚</th><th>2) L11/L21</th><th>3) U/V/W/P1/P/⏚
(Note 2)</th><th>4) P/C</th><th>5) B1/B2</th><th>6) BU/BV/BW</th></tr>
<tr><td>MR-J2S-60_4</td><td rowspan="3">2(AWG14)</td><td rowspan="8">1.25(AWG16)</td><td rowspan="2">1.25(AWG16)</td><td rowspan="6">2 (AWG14): a</td><td rowspan="6">1.25 (AWG16)</td><td rowspan="6"></td></tr>
<tr><td>MR-J2S-100_4</td></tr>
<tr><td>MR-J2S-200_4</td><td>2(AWG14)</td></tr>
<tr><td>MR-J2S-350_4</td><td>3.5 (AWG12): b</td><td>3.5 (AWG12): b</td></tr>
<tr><td>MR-J2S-500_4</td><td rowspan="2">5.5 (AWG10): b</td><td rowspan="2">5.5 (AWG10): b</td></tr>
<tr><td>MR-J2S-700_4</td></tr>
<tr><td>MR-J2S-11K_4</td><td>8 (AWG8): c</td><td>8 (AWG8): c</td><td>3.5 (AWG12): b</td><td rowspan="2">2 (AWG14)</td><td rowspan="2">2 (AWG14)</td></tr>
<tr><td>MR-J2S-15K_4</td><td rowspan="2">14 (AWG6): d</td><td rowspan="2">22 (AWG4): e</td><td rowspan="2">5.5 (AWG10): b</td></tr>
<tr><td>MR-J2S-22K_4</td></tr>
</table>

Note 1. For details on crimp terminals and applicable tools, refer to section 4.2.1 (2) of this document.
2. P1 is not available for a servo amplifier of 7 kW or less.

4.1.2 MR-J4-series power supply wire size

POINT

- To comply with the IEC/EN/UL/CSA standard, use the wires shown in the instruction manuals of the servo amplifier in use for wiring. To comply with other standards, use a wire that is complied with each standard.
- Selection conditions of wire size are as follows.
  Construction condition: Single wire set in midair
  Wire length: 30 m or less

The following diagram shows the wires used for wiring. Use the wires given in this section or equivalent.

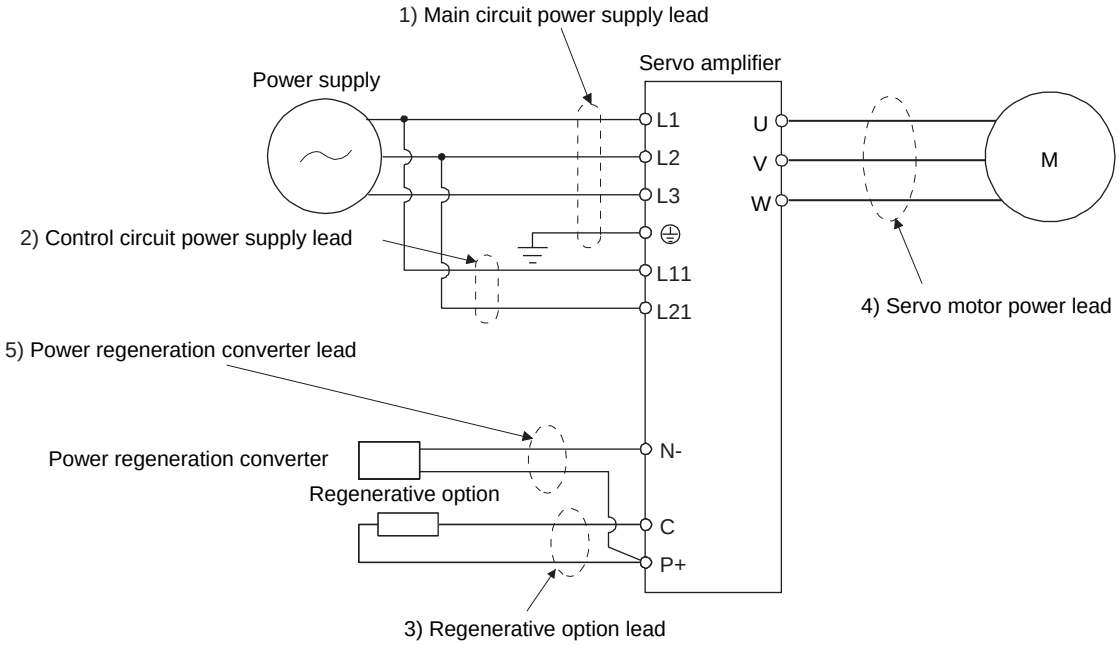

Example of selecting the wire sizes

For the power supply wire, use a 600 V grade heat-resistant polyvinyl chloride insulated wire (HIV wire). The table below shows selection examples of power supply wire sizes.

Wire size selection example (HIV wire)
Recommended wire

<table>
<tr><th rowspan="2">Servo amplifier</th><th colspan="4">Power supply wire [mm²] (Note 1)</th></tr>
<tr><th>1) L1/L2/L3/⏚</th><th>2) L11/L21</th><th>3) P+/C</th><th>4) U/V/W/⏚
(Note 3)</th></tr>
<tr><td>MR-J4-10_(1) (-RJ)</td><td rowspan="7">2 (AWG 14)</td><td rowspan="8">1.25 to 2
(AWG 16 to 14)
(Note 4)</td><td rowspan="8">2 (AWG 14)</td><td rowspan="7">AWG 18 to 14
(Note 4)</td></tr>
<tr><td>MR-J4-20_(1) (-RJ)</td></tr>
<tr><td>MR-J4-40_(1) (-RJ)</td></tr>
<tr><td>MR-J4-60_(-RJ)</td></tr>
<tr><td>MR-J4-70_(-RJ)</td></tr>
<tr><td>MR-J4-100_(-RJ)</td></tr>
<tr><td>MR-J4-200_(-RJ)</td></tr>
<tr><td>MR-J4-350_(-RJ)</td><td>3.5 (AWG 12)</td><td>AWG 16 to 10</td></tr>
<tr><td>MR-J4-500_(-RJ)
(Note 2)</td><td>5.5 (AWG 10): a</td><td rowspan="2">1.25 (AWG 16): a
2 (AWG 14): d
(Note 4)</td><td rowspan="2">2 (AWG 14): c</td><td>2 (AWG 14): c
3.5 (AWG 12): a
5.5 (AWG 10): a</td></tr>
<tr><td>MR-J4-700_(-RJ)
(Note 2)</td><td>8 (AWG 8): b</td><td>2 (AWG 14): c
3.5 (AWG 12): a
5.5 (AWG 10): a
8 (AWG 8): b</td></tr>
<tr><td>MR-J4-11K_(-RJ)
(Note 2)</td><td>14 (AWG 6): f</td><td rowspan="3">1.25 (AWG 16): c
2 (AWG 14): c</td><td>3.5 (AWG 12): g</td><td>14 (AWG 6): f
(Note 5)
5.5 (AWG 10): g
8 (AWG 8): k</td></tr>
<tr><td>MR-J4-15K_(-RJ)
(Note 2)</td><td>22 (AWG 4): h</td><td>5.5 (AWG 10): g</td><td>22 (AWG 4): h
(Note 5) 8 (AWG 8): k</td></tr>
<tr><td>MR-J4-22K_(-RJ)
(Note 2)</td><td>38 (AWG 2): i</td><td>5.5 (AWG 10): j</td><td>38 (AWG 2): i</td></tr>
</table>

Note 1. Alphabets in the table indicate crimping tools. For crimp terminals and applicable tools, refer to section 4.2.2 (1) of this document.
2. To connect these models to a terminal block, make sure to use the screws that come with the terminal block.
3. This wire size is applicable to the servo amplifier connector and terminal block. For wires connecting to the servo motor, refer to each servo amplifier instruction manual.
4. To comply with the UL/CSA standard, use a wire of 2 mm².
5. This is for connection to a natural cooling linear servo motor.

Wire size selection example (HIV wire)

Recommended wire

<table>
<tr><th rowspan="2">Servo amplifier</th><th colspan="4">Power supply wire [mm²] (Note 1)</th></tr>
<tr><th>1) L1/L2/L3/⏚</th><th>2) L11/L21</th><th>3) P+/C</th><th>4) U/V/W/⏚
(Note 3)</th></tr>
<tr><td>MR-J4-60_4(-RJ)/
MR-J4-100_4(-RJ)</td><td rowspan="3">2 (AWG 14)</td><td rowspan="3">1.25 to 2
(AWG 16 to 14)
(Note 4)</td><td rowspan="3">2 (AWG 14)</td><td rowspan="3">AWG 16 to 14</td></tr>
<tr><td>MR-J4-200_4(-RJ)</td></tr>
<tr><td>MR-J4-350_4(-RJ)</td></tr>
<tr><td>MR-J4-500_4(-RJ) (Note 2)</td><td>2 (AWG 14): b</td><td rowspan="2">1.25 (AWG 16): a
2 (AWG 14): c
(Note 4)</td><td rowspan="2">2 (AWG 14): b</td><td>3.5 (AWG 12): a</td></tr>
<tr><td>MR-J4-700_4(-RJ) (Note 2)</td><td>3.5 (AWG 12): a</td><td>5.5 (AWG 10): a</td></tr>
<tr><td>MR-J4-11K_4(-RJ) (Note 2)</td><td>5.5 (AWG 10): d</td><td rowspan="3">1.25 (AWG 16): b
2 (AWG 14): b
(Note 4)</td><td>2 (AWG 14): f</td><td rowspan="2">8 (AWG 8): g</td></tr>
<tr><td>MR-J4-15K_4(-RJ) (Note 2)</td><td>8 (AWG 8): g</td><td>3.5 (AWG 12): d</td></tr>
<tr><td>MR-J4-22K_4(-RJ) (Note 2)</td><td>14 (AWG 6): i</td><td>3.5 (AWG 12): e</td><td>5.5 (AWG 10): e
(Note 5)
8 (AWG 8): h (Note 6)
14 (AWG 6): i</td></tr>
</table>

Note 1. Alphabets in the table indicate crimping tools. For crimp terminals and applicable tools, refer to section 4.2.2 (2) of this document.

2. To connect these models to a terminal block, make sure to use the screws that come with the terminal block.
3. This wire size is applicable to the servo amplifier connector and terminal block. For wires connecting to the servo motor, refer to each servo amplifier instruction manual.
4. To comply with the UL/CSA standard, use a wire of 2 mm².
5. This is for connection to a natural cooling linear servo motor.
6. This is for connection to a liquid-cooling linear servo motor.

4.2 Selection Example of Crimp Terminals

4.2.1 MR-J2S-series crimp terminal

(1) Selection example of crimp terminals (100 V/200 V class)

Recommended crimp terminals

Symbol	Servo amplifier-side crimp terminals				
	Crimp terminal	Applicable tool			Manufacturer
		Body	Head	Dice	
a	32959	47387			Tyco electronics
b	FDV5.5-4	YNT-1210S			JST
c	FVD8-5	YF-1 E-4	YNE-38	DH-111 DH-121	
d	FVD14-6	YF-1 E-4	YNE-38	DH-112 DH-122	
e	FVD22-6	YF-1 E-4	YNE-38	DH-113 DH-123	
f (Note 1, 2)	38-S6	YPT-60-21		TD-124 TD-112	
		YF-1 E-4	YET-60-1	TD-124 TD-112	
	R38-6S	NOP60 NOM60			NICHIFU
g	R60-8 (Note 1)	YDT-60-21		TD-125 TD-113	JST
		YF-1 E-4	YET-60-1	TD-125 TD-113	

Note 1. Cover the crimped portion with an insulating tape.
2. Always use recommended crimping terminals or equivalent since some crimping terminals cannot be installed depending on the size.

(2) Selection example of crimp terminals (400 V class)

Recommended crimp terminals

Symbol	Servo amplifier-side crimp terminals				
	Crimp terminal	Applicable tool			Manufacturer
		Body	Head	Dice	
a	32959	47387			Tyco electronics
b	32968	59239			
c	FVD8-5	YF-1 E-4	YNE-38	DH-111 DH-121	JST
d	FVD14-6	YF-1 E-4	YNE-38	DH-112 DH-122	
e	FVD22-6	YF-1 E-4	YNE-38	DH-113 DH-123	

4.2.2 MR-J4-series crimp terminal

(1) Selection example of crimp terminals (200 V/100 V class)

The table below shows selection examples of a crimp terminal for a servo amplifier terminal block.

Recommended crimp terminals

Symbol	Servo amplifier-side crimp terminals				
	(Note 2) Crimp terminal	Applicable tool			Manufacturer
		Body	Head	Dice	
a	FVD5.5-4	YNT-1210S			JST
b (Note 1)	8-4NS	YHT-8S			
c	FVD2-4	YNT-1614			
d	FVD2-M3				
e	FVD1.25-M3	YNT-2216			
f	FVD14-6	YF-1	YNE-38	DH-122 DH-112	
g	FVD5.5-6	YNT-1210S			
h	FVD22-6	YF-1	YNE-38	DH-123 DH-113	
i	FVD38-8	YF-1	YNE-38	DH-124 DH-114	
j	FVD5.5-8	YNT-1210S			
k	FVD8-6	YF-1 E-4	YNE-38	DH-121 DH-111	

Note 1. Cover the crimped portion with an insulating tape.
2. Installation of a crimp terminal may be impossible depending on the size, so make sure to use the recommended crimp terminal or one equivalent to it.

(2) Selection example of crimp terminals (400 V class)

The table below shows selection examples of a crimp terminal for a servo amplifier terminal block.

Recommended crimp terminals

Symbol	Servo amplifier-side crimp terminals				Manufacturer
	Crimp terminal (Note)	Applicable tool			
		Body	Head	Dice	
a	FVD5.5-4	YNT-1210S			JST
b	FVD2-4	YNT-1614			
c	FVD2-M3				
d	FVD5.5-6	YNT-1210S			
e	FVD5.5-8	YNT-1210S			
f	FVD2-6	YNT-1614			
g	FVD8-6	YF-1	YNE-38	DH-121 DH-111	
h	FVD8-8				
i	FVD14-8			DH-122 DH-112	

Note. Installation of a crimp terminal may be impossible depending on the size, so make sure to use the recommended crimp terminal or one equivalent to it.

4.3 Selection of Molded-Case Circuit Breaker, Fuse, and Magnetic Contactor (Example)

4.3.1 MR-J2S series, molded-case circuit breakers, fuses, and magnetic contactors

⚠ CAUTION

- Select a molded-case circuit breaker with a short shut-off time to prevent smoking and fire from the servo amplifier.
- Always use one molded-case circuit breaker and one magnetic contactor with one servo amplifier.

When using a fuse instead of the molded-case circuit breaker, use the one having the specifications given in this section.

Molded-case circuit breakers, fuses, and magnetic contactors

Servo amplifier	Molded-case Circuit breakers (Note)	Fuses			Magnetic contactor
		Class	Current [A]	Voltage [V]	
MR-J2S-10_(1)	30 A frame 5 A	K5	10	AC 250	S-N10
MR-J2S-20_					
MR-J2S-40_/20_(1)	30 A frame 10 A		15		
MR-J2S-60_/40_(1)	30 A frame 15 A		20		
MR-J2S-70_					
MR-J2S-100_			25		
MR-J2S-200_	30 A frame 20 A		40		S-N18
MR-J2S-350_	30 A frame 30 A		70		S-N20
MR-J2S-500_	50 A frame 50 A		125		S-N35
MR-J2S-700_	100 A frame 75 A		150		S-N50
MR-J2S-11K_	100 A frame 100 A		200		S-N65
MR-J2S-15K_	225 A frame 125 A		250		S-N95
MR-J2S-22K_	225 A frame 175 A		350		S-N125
MR-J2S-60_4	30 A frame 5 A				S-N10
MR-J2S-100_4	30 A frame 10 A				
MR-J2S-200_4	30 A frame 15 A				
MR-J2S-350_4	30 A frame 20 A				S-N18
MR-J2S-500_4	30 A frame 30 A				S-N18
MR-J2S-700_4	50 A frame 40 A				S-N20
MR-J2S-11K_4	60 A frame 60 A				S-N25
MR-J2S-15K_4	100 A frame 75 A				S-N35
MR-J2S-22K_4	225 A frame 125 A				S-N65

Note. Use a molded-case circuit breaker with operating characteristics equivalent or higher than our multi-purpose product.

4.3.2 MR-J4 series, molded-case circuit breakers, fuses, and magnetic contactors (recommended)

(1) For main circuit power supply

> ⚠ CAUTION
> ●Select a molded-case circuit breaker with a short shut-off time to prevent smoking and fire from the servo amplifier.
> ●Always use one molded-case circuit breaker and one magnetic contactor with one servo amplifier.

When using a fuse instead of the molded-case circuit breaker, use the one having the specifications given in this section.

Molded-case circuit breakers, fuses, and magnetic contactors

Servo amplifier	Molded-case circuit breaker (Note 1)		Fuse			Magnetic contactor (Note 2)
	Frame, rated current	Voltage AC [V]	Class	Current [A]	Voltage AC [V]	
MR-J4-10_(-RJ)	30 A frame 5 A	240	T	10	300	S-N10 S-T10
MR-J4-20_(-RJ)						
MR-J4-40_(-RJ)	30 A frame 10 A			15		
MR-J4-60_(-RJ)	30 A frame 15 A			20		
MR-J4-70_(-RJ)						
MR-J4-100_(-RJ)						
MR-J4-200_(-RJ)	30 A frame 20 A			40		S-N20 (Note 3) S-T21
MR-J4-350_(-RJ)	30 A frame 30 A			70		S-N20 S-T21
MR-J4-500_(-RJ)	50 A frame 50 A			125		S-N35
MR-J4-700_(-RJ)	100 A frame 75 A			150		S-N50
MR-J4-11K_(-RJ)	100 A frame 100 A			200		
MR-J4-15K_(-RJ)	125 A frame 125 A			250		S-N65
MR-J4-22K_(-RJ)	225 A frame 175 A			350		S-N95
MR-J4-10_1(-RJ)	30 A frame 5 A			10		S-N10 S-T10
MR-J4-20_1(-RJ)	30 A frame 10 A			15		
MR-J4-40_1(-RJ)	30 A frame 15 A			20		

Note 1. In order for the servo amplifier to comply with the UL/CSA standard, refer to the applicable "Servo Amplifier Instruction Manual".
2. Use a magnetic contactor with an operation delay time (interval between current being applied to the coil until closure of contacts) of 80 ms or less.
3. S-N18 can be used when auxiliary contact is not required.

Servo amplifier	Molded-case circuit breaker (Note 1, 3)		Fuses			Magnetic contactor (Note 2)
	Frame, rated current	Voltage AC [V]	Class	Current [A]	Voltage AC [V]	
MR-J4-60_4(-RJ)	30 A frame 5 A	480	T	10	600	S-N10 S-T10
MR-J4-100_4(-RJ)	30 A frame 10 A			15		
MR-J4-200_4(-RJ)	30 A frame 15 A			25		
MR-J4-350_4(-RJ)	30 A frame 20 A			35		S-N18 S-T21
MR-J4-500_4(-RJ)	30 A frame 20 A			50		
MR-J4-700_4(-RJ)	30 A frame 30 A			65		S-N20 S-T21
MR-J4-11K_4(-RJ)	50 A frame 50 A			100		S-N25
MR-J4-15K_4(-RJ)	60 A frame 60 A			150		S-N35
MR-J4-22K_4(-RJ)	100 A frame 100 A			175		S-N50

Note 1. In order for the servo amplifier to comply with the UL/CSA standard, refer to the applicable "Servo Amplifier Instruction Manual".
2. Use a magnetic contactor with an operation delay time (interval between current being applied to the coil until closure of contacts) of 80 ms or less.
3. Use a molded-case circuit breaker with operating characteristics equivalent or higher than our multi-purpose product.

(2) For control circuit power supply

When the wiring for the control circuit power supply (L11, L21) is thinner than that for the main circuit power supply (L1, L2, L3), install an overcurrent protection device (molded-case circuit breaker or fuse) to protect the branch circuit.

Molded-case circuit breaker, fuse

Servo amplifier	Molded-case circuit breaker (Note)		Fuse (Class T)		Fuse (Class K5)	
	Frame, rated current	Voltage AC [V]	Current [A]	Voltage AC [V]	Current [A]	Voltage AC [V]
MR-J4-10_(-RJ)	30 A frame 5 A	240	1	300	1	250
MR-J4-20_(-RJ)						
MR-J4-40_(-RJ)						
MR-J4-60_(-RJ)						
MR-J4-70_(-RJ)						
MR-J4-100_(-RJ)						
MR-J4-200_(-RJ)						
MR-J4-350_(-RJ)						
MR-J4-500_(-RJ)						
MR-J4-700_(-RJ)						
MR-J4-11K_ (-RJ)						
MR-J4-15K_(-RJ)						
MR-J4-22K_(-RJ)						
MR-J4-60_4(-RJ)	30 A frame 5 A	480	1	600	1	600
MR-J4-100_4(-RJ)						
MR-J4-200_4(-RJ)						
MR-J4-350_4(-RJ)						
MR-J4-500_4(-RJ)						
MR-J4-700_4(-RJ)						
MR-J4-11K_4(-RJ)						
MR-J4-15K_4(-RJ)						
MR-J4-22K_4(-RJ)						
MR-J4-10_1(-RJ)	30 A frame 5 A	240	1	300	1	250
MR-J4-20_1(-RJ)						
MR-J4-40_1(-RJ)						

Note. In order for the servo amplifier to comply with the UL/CSA standard, refer to the Servo Amplifier Instruction Manual.

5. BATTERY

> POINT
>
> ●MR-BAT and A6BAT batteries for MR-J2S, or the MR-J2M-BT battery unit for MR-J2M, cannot be used because their battery voltage specifications are different from those of the MR-J4 series.

5.1 MR-J2S-Series Battery

5.1.1 Battery replacement procedure

Model: MR-BAT or A6BAT

> ⚠ WARNING
>
> ●Before mounting a battery, turn off the power and wait 15 min or longer until the charge lamp turns off, then check the voltage between P and N with a voltage tester, etc., otherwise an electric shock may occur. In addition, when confirming whether the charge lamp is off or not, always check from the front of the servo amplifier.

> POINT
>
> ●The internal circuits of the servo amplifier may be damaged by static electricity. Always take the following precautions.
> • Ground human body and work bench.
> • Do not touch the conductive areas, such as connector pins and electrical parts, directly by hand.

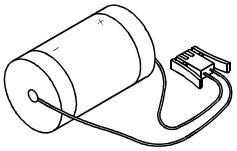

5.2 MR-J2M-Series Battery Unit

Type: MR-J2M-BT

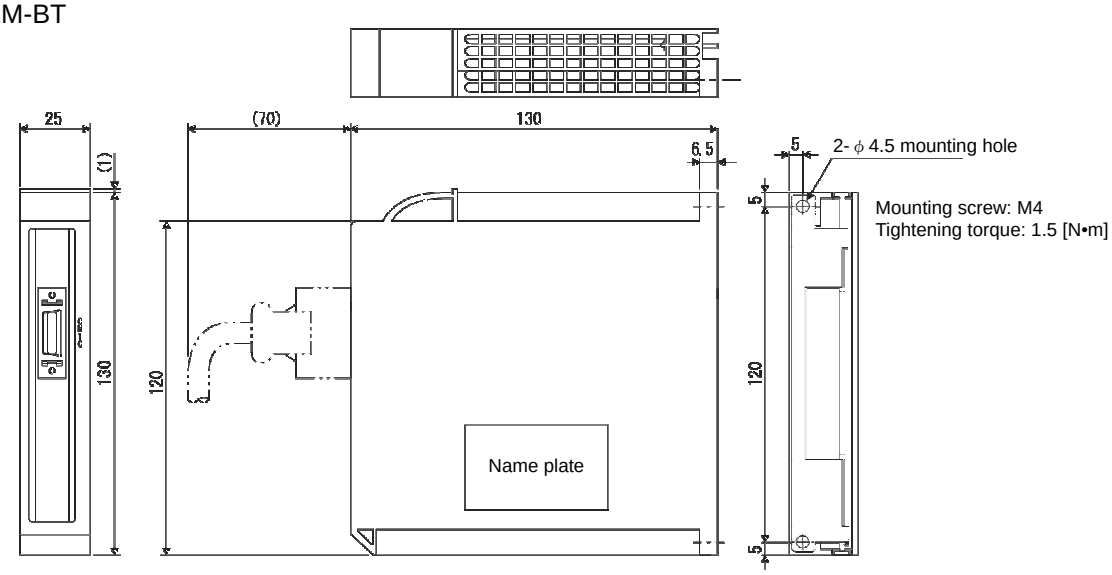

5.3 MR-J4-Series Battery

5.3.1 Battery replacement procedure

Model: MR-BAT6V1SET, MR-BAT6V1BJ, MR-BT6VCASE

⚠ WARNING	●Before replacing a battery, turn off the main circuit power and wait for 15 minutes or longer (when 30 kW or more is used, 20 minutes or more) until the charge lamp turns off. Then, check the voltage between P+ and N- with a voltage tester or others. Otherwise, an electric shock may occur. In addition, when confirming whether the charge lamp is off or not, always confirm it from the front of the servo amplifier.

⚠ CAUTION	●The internal circuits of the servo amplifier may be damaged by static electricity. Always take the following precautions. • Ground your body and the work bench. • Do not touch the conductive areas, such as connector pins and electrical parts, directly by hand. ●The built-in battery for the MR-BAT6V1BJ battery for junction battery cable cannot be replaced. Therefore, do not disassemble the MR-BAT6V1BJ battery for junction battery cable. Doing so may cause a malfunction.

POINT

●When using the BAT6V1SET battery and the MR-BT6VCASE battery case are used
Replacing a battery with the control circuit power supply turned off will erase the absolute position data.
When using the MR-BAT6V1BJ battery for junction battery cable
In order to prevent the absolute position data from being erased, replace the MR-BAT6V1BJ battery for junction battery cable according to the procedure described in the Instruction Manual.
●Verify that the battery for replacement is within its service life.

Replace the old battery with only the control circuit power supply turned on. Replacing a battery with the control circuit power supply turned on will cause [AL.9F.1 low battery] but will not erase the absolute position data.
Refer to the Instruction Manual for the procedure for mounting the battery on the servo amplifier.

POINT

●Refer to the Instruction Manual for battery transportation and the new EU Directive on batteries.

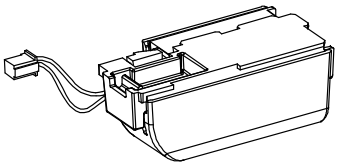

POINT

- Three types of batteries are used to construct the absolute position detection system: MR-BAT6V1SET battery, MR-BAT6V1BJ battery for junction battery cable, and MR-BT6VCASE battery case. The use of the MR-BAT6V1BJ battery for junction battery cable has the following characteristics distinctive from other batteries.
  - The encoder cable can be removed from the servo amplifier.
  - A battery can be replaced with the control circuit power supply turned off.
- If the encoder lost the absolute position data, always perform home position setting before operation. The encoder will lose the absolute position data in the following cases. In addition, the absolute position data may be erased if the battery is used outside of the specification.
  When using the MR-BAT6V1SET battery and the MR-BT6VCASE battery case
  - Encoder cable is removed.
  - A battery is replaced with the control circuit power supply turned off.

  When using the MR-BAT6V1BJ battery for junction battery cable
  - The connector and the cable are removed between the servo motor and the battery.
  - A battery is replaced in a procedure different from the procedure described in the Instruction Manual.
- A single MR-BT6VCASE battery case can retain the absolute position data of up to eight axes of servo motors.

5.3.2 When using the MR-BAT6V1SET battery

(a) Battery connection
Connect according to the following figure.

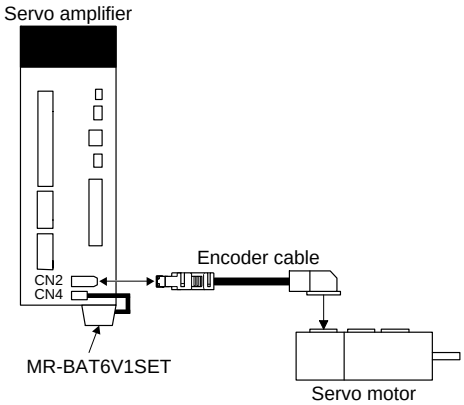

(b) Battery manufacture year and month
The manufacture date of an MR-BAT6V1 battery installed in MR-BAT6V1SET is written on the name plate attached to the MR-BAT6V1 battery.

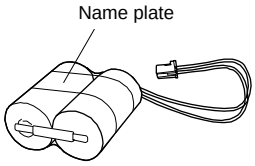

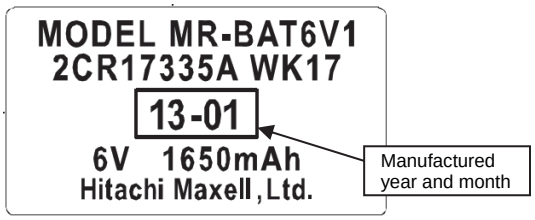

5.3.3 When using MR-BAT6V1BJ battery for junction battery cable

(a) Battery connection

Connect according to the following figure in combination with the MR-BT6VCBL03M junction battery cable.

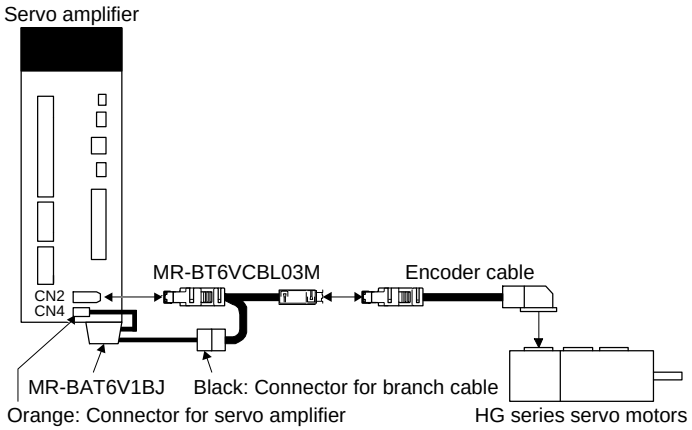

(b) Battery manufacture year and month

The manufacture year and month are described in the manufacturer's (SERIAL) number marked on the rating name plate. The second digit of the manufacturer's number indicates the first digit of the Christian Era and the third digit indicates the manufacture month (X for October, Y for November, and Z for December). For example, November 2013 is indicated as "SERIAL:_3Y_ _ _ _ _ _".

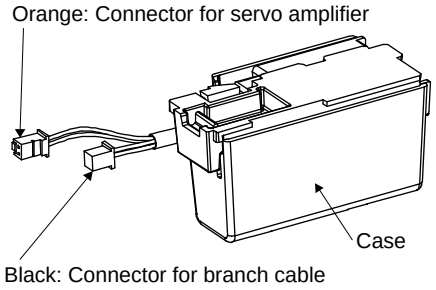

5.3.4 When using MR-BT6VCASE battery case

(a) Battery connection

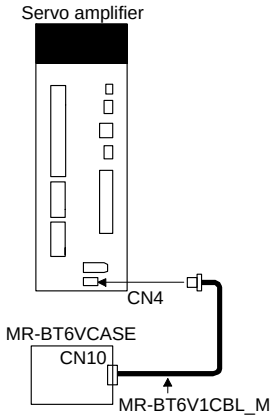

Connection to a single unit of servo amplifier

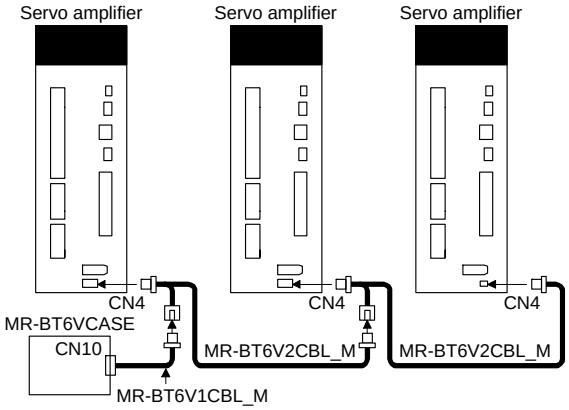

Connection to eight axes of servo amplifiers

A single MR-BT6VCASE battery case can retain the absolute position data of up to eight axes of servo motors. The maximum number of axes includes the number of axes of servo motors. Refer to the following table for the connectible number of axes of servo motors.

Servo motor	Number of axes								
Rotary servo motor	0	1	2	3	4	5	6	7	8

The battery case accommodates five connected batteries. The battery case contains no batteries. Batteries need to be prepared separately.

(b) Battery manufacture year and month

The manufacture year and month of an MR-BAT6V1 to be housed in the MR-BT6VCASE battery case is written on the name plate attached to the MR-BAT6V1 battery.

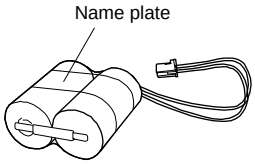

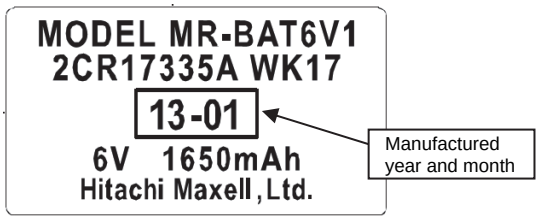

6. EMC FILTER

POINT
●Recommended EMC filters for the MR-J2S series are different from those for the MR-J4 series.

6.1 MR-J2S-Series EMC Filter (200 V/100 V class)

It is recommended that one of the following filters be used to comply with the EN EMC Directive. Some EMC filters have large in leakage current.

Combination with the servo amplifier

Servo amplifier	Recommended filter		Mass [kg]
	Model	Leakage current [mA]	
MR-J2S-10_ to MR-J2S-100_ MR-J2S-10_1 to MR-J2S-40_1	SF1252	38	0.75
MR-J2S-200_/MR-J2S-350_	SF1253	57	1.37
MR-J2S-500_	(Note) HF3040A-TM	1.5	5.5
MR-J2S-700_	(Note) HF3050A-TM	1.5	6.7
MR-J2S-11K_	(Note) HF3060A-TMA	3.0	10.0
MR-J2S-15K_	(Note) HF3080A-TMA	3.0	13.0
MR-J2S-22K_	(Note) HF3100A-TMA	3.0	14.5
MR-J2S-30K_/MR-J2S-37K_	(Note) HF3200A-TMA	3.0	23.5

Note. Soshin Electric. A surge protector is separately required to use any of these EMC filters.
(Refer to EMC Installation Guidelines.)

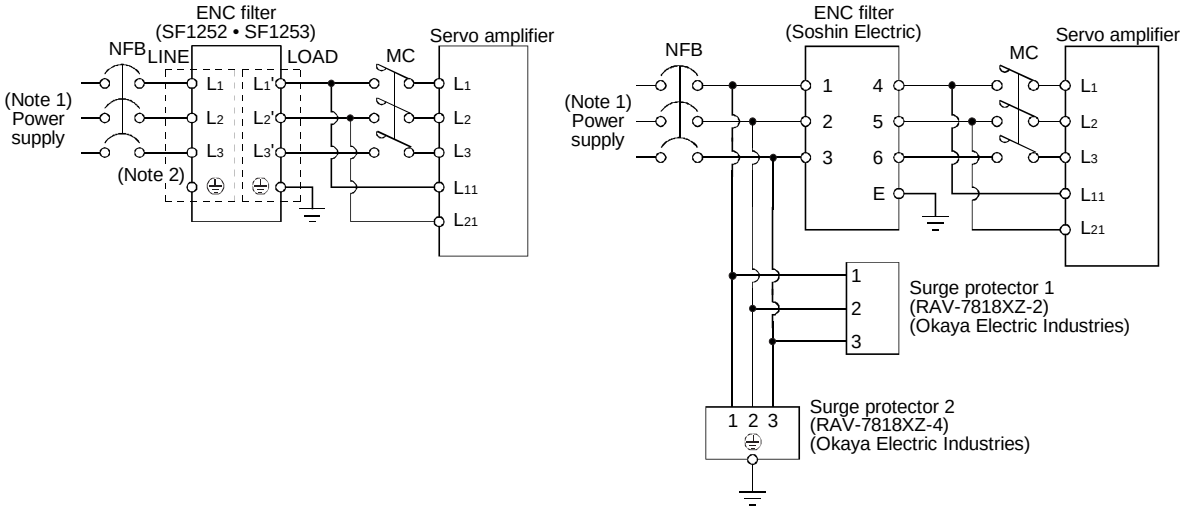

Note1. With 1-phase 230 V AC, connect the power supply to L1 and L2, and leave L3 open.
L3 is not provided for 1-phase 100 V AC to 120 V AC.
2. When the power supply has an earth wire, connect it to this terminal.

6.1.1 Dimensions

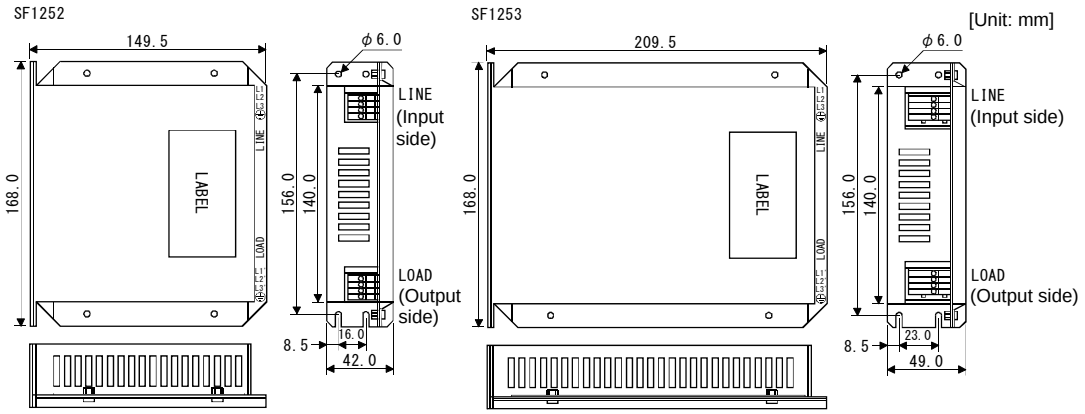

HF3040A-TM/HF3050A-TM/HF3060A-TMA

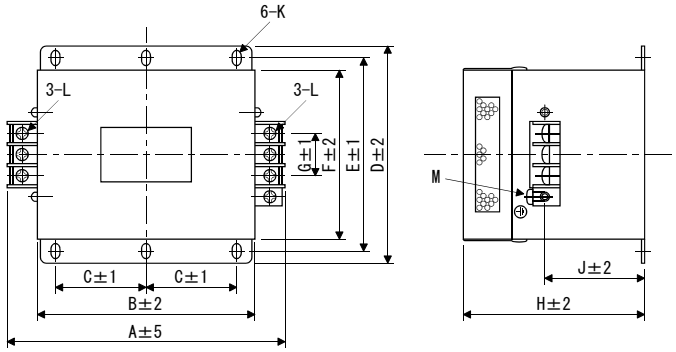

Model	Dimensions [mm]											
	A	B	C	D	E	F	G	H	J	K	L	M
HF3040A-TM	260	210	85	155	140	125	44	140	70	R3.25 length 8	M5	M4
HF3050A-TM	290	240	100	190	175	160	44	170	100		M6	M4
HF3060A-TMA	290	240	100	190	175	160	44	230	160		M6	M4

HF3080A-TMA/HF3100A-TMA

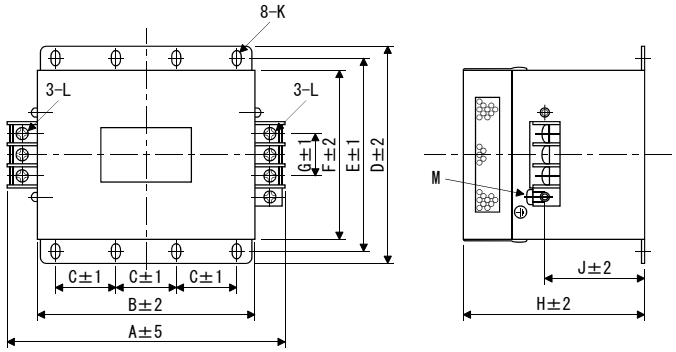

Model	Dimensions [mm]											
	A	B	C	D	E	F	G	H	J	K	L	M
HF3080A-TMA HF3100A-TMA	405	350	100	220	200	180	56	210	135	R4.25 length 12	M8	M6

HF3200A-TMA

[Unit: mm]

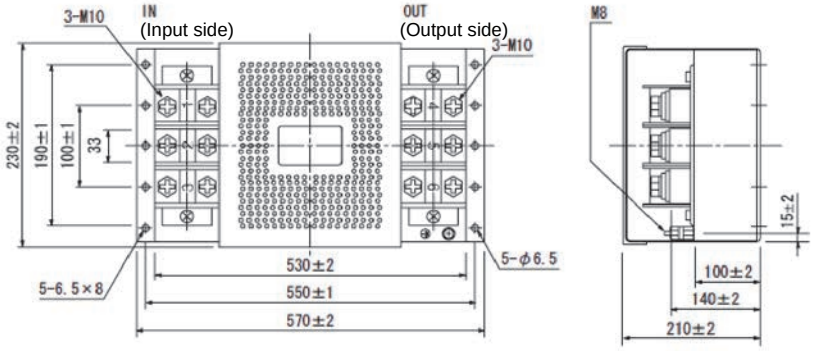

6.2 MR-J2S-Series EMC Filter (400 V class)

It is recommended that one of the following filters be used to comply with the EN EMC Directive.
Some EMC filters have large in leakage current.

Combination with the servo amplifier

Servo amplifier	Recommended filter		Mass [kg]
	Model (Note 1)	Leakage current [mA] (Note 2)	
MR-J2S-60_4 to MR-J2S-200_4	TF3005C-TX	5.5	6
MR-J2S-350_4 to MR-J2S-700_4	TF3020C-TX		
MR-J2S-11K_4	TF3030C-TX		7.5
MR-J2S-15K_4	TF3040C-TX		12.5
MR-J2S-22K_4	TF3060C-TX		
MR-J2S-30K_4~ MR-J2S-55K_4	TF3150C-TX	5.5	31

Note 1. Soshin Electric
2. When one phase opens with the 3-phase neutral-point (N) grounded power supply, the value will be 350 mA.

6.2.1 Dimensions

[Unit: mm]

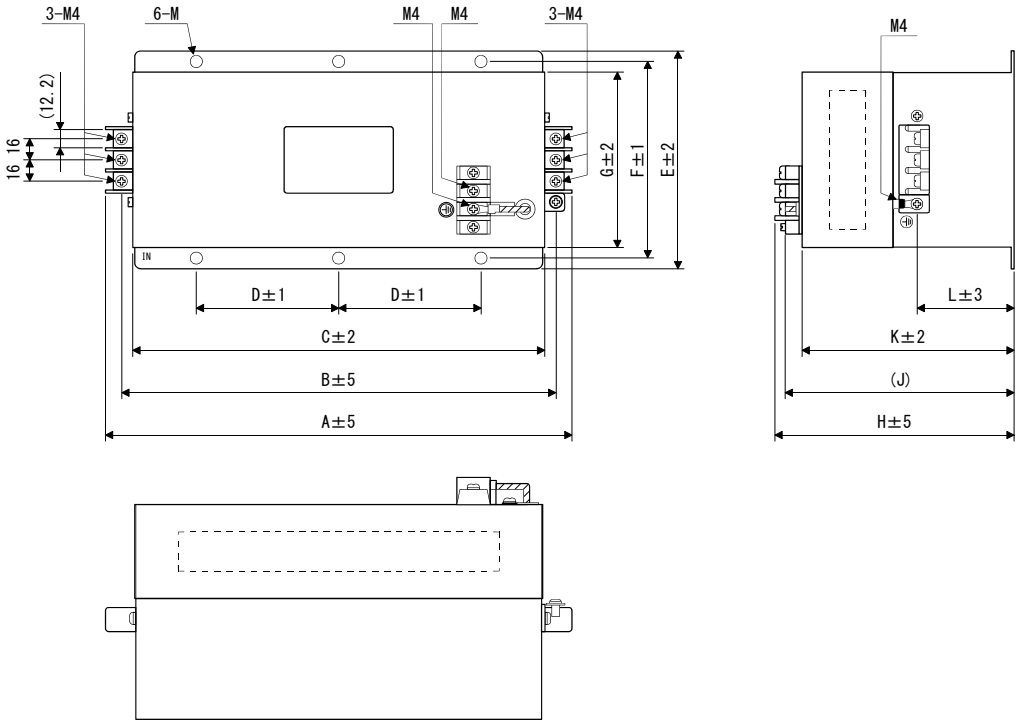

Model	Dimensions [mm]											
	A	B	C	D	E	F	G	H	J	K	L	M
TF3005C-TX	332	308	290	100	155	140	125	170	(160)	150	(67.5)	R3.25 length 8 (For M6)
TF3020C-TX												
TF3030C-TX												

[Unit: mm]

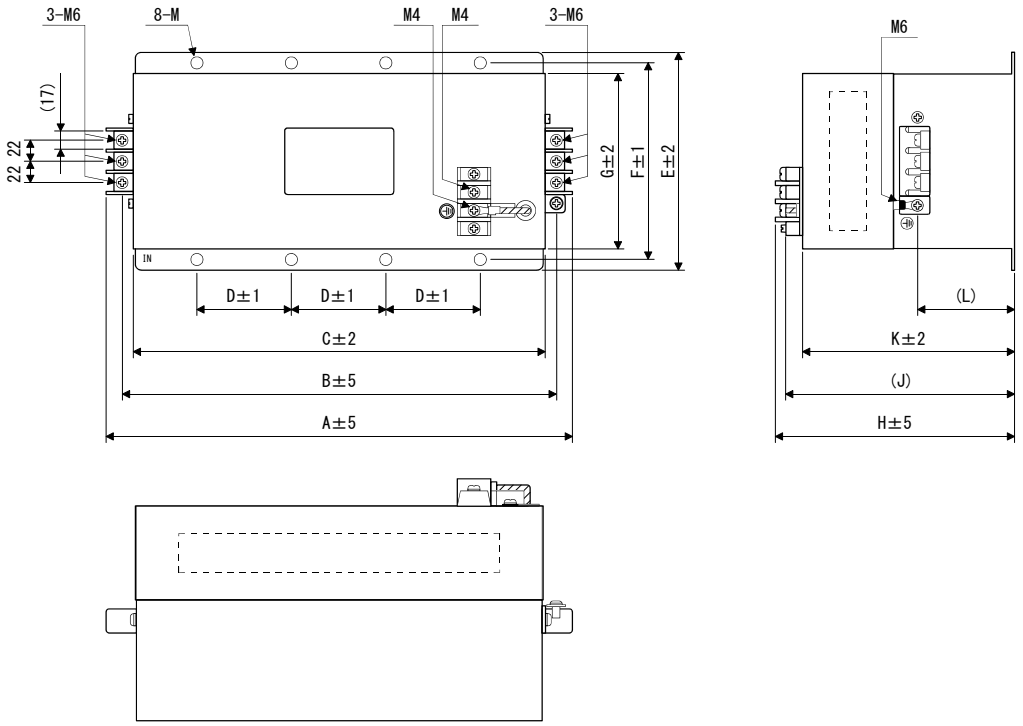

Model	Dimensions [mm]											
	A	B	C	D	E	F	G	H	J	K	L	M
TF3040C-TX TF3060C-TX	438	412	390	100	175	160	145	200	(190)	180	(91.5)	R3.25 length 8 (For M6)

TF3150C-TX

[Unit: mm]

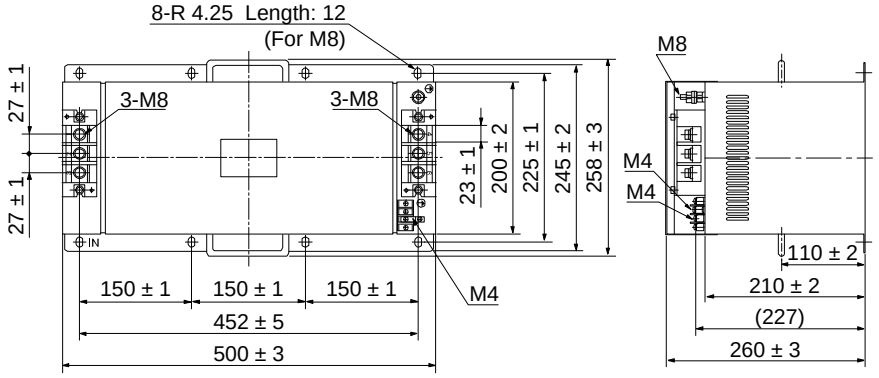

6.3 MR-J4-Series EMC Filter (Recommended) (200 V class)

It is recommended that one of the following filters be used to comply with EN EMC directive.
Some EMC filters have large in leakage current.

Table. Combination with the servo amplifier

Servo amplifier	Recommended filter (Soshin Electric)				Mass [kg]
	Model	Rated current [A]	Rated voltage [V AC]	Leakage current [mA]	
MR-J4-10_(-RJ) to MR-J4-100_(-RJ)	HF3010A-UN (Note)	10	250	5	3.5
MR-J4-200_(-RJ)/MR-J4-350_(-RJ)	HF3030A-UN (Note)	30			5.5
MR-J4-500_(-RJ)/MR-J4-700_(-RJ)	HF3040A-UN (Note)	40		6.5	6
MR-J4-11K_(-RJ)/MR-J4-15K_(-RJ)/ MR-J4-22K_(-RJ)	HF3100A-UN (Note)	100			12
MR-J4-DU30K_/MR-J4-DU37K_	HF3200A-UN (Note)	200	250	9	18
MR-J4-10_1(-RJ) to MR-J4-40_1(-RJ)	HF3010A-UN (Note)	10	250	5	3.5

Note. A surge protector is separately required to use any of these EMC filters.

6.3.1 Connection example

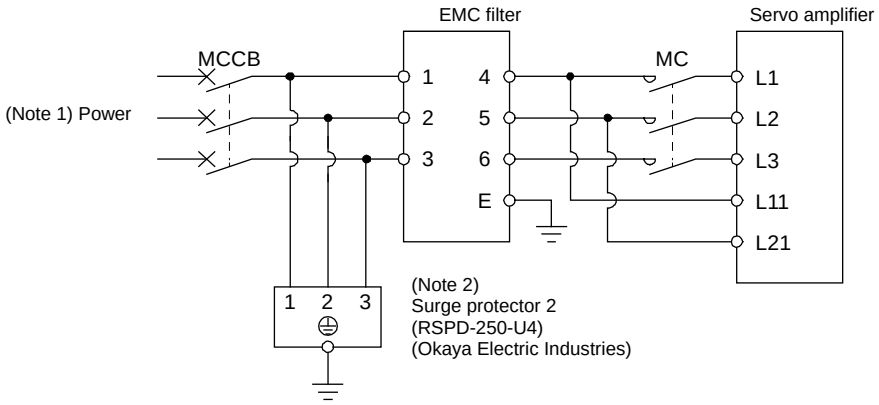

Note 1. For 1-phase 200 V AC to 240 V AC, connect the power supply to L1 and L3. Leave L2 open.
L2 is not provided for 1-phase 100 V AC to 120 V AC.
2. The example is when a surge protector is connected.

6.3.2 Dimensions

HF3010A-UN

[Unit: mm]

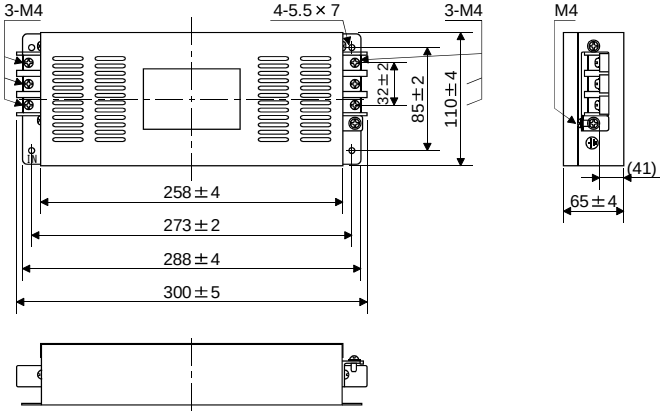

HF3030A-UN/HF-3040A-UN

[Unit: mm]

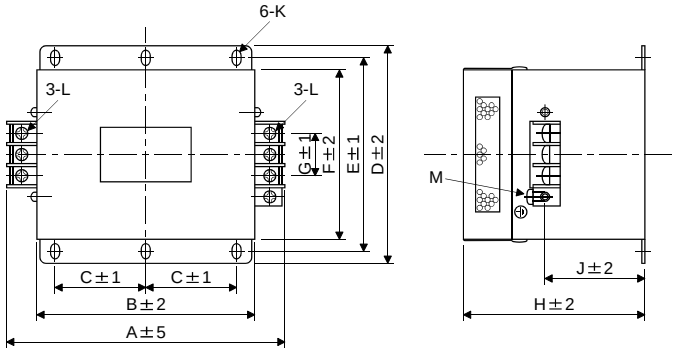

Model	Dimensions [mm]											
	A	B	C	D	E	F	G	H	J	K	L	M
HF3030A-UN HF3040A-UN	260	210	85	155	140	125	44	140	70	R3.25 length 8	M5	M4

HF3100A-UN

[Unit: mm]

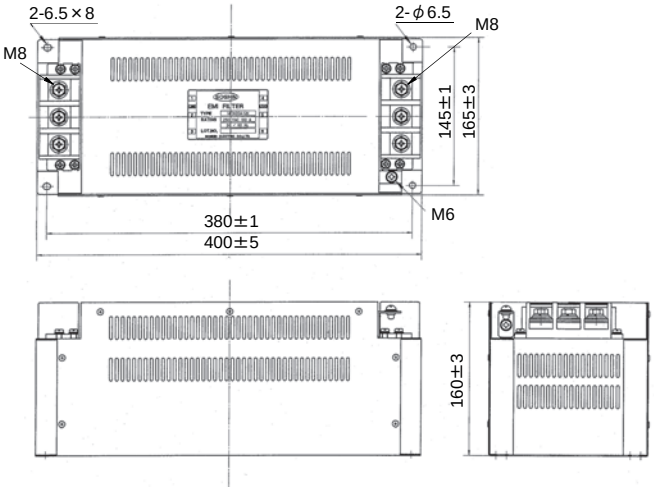

HF3200A-UN

[Unit: mm]

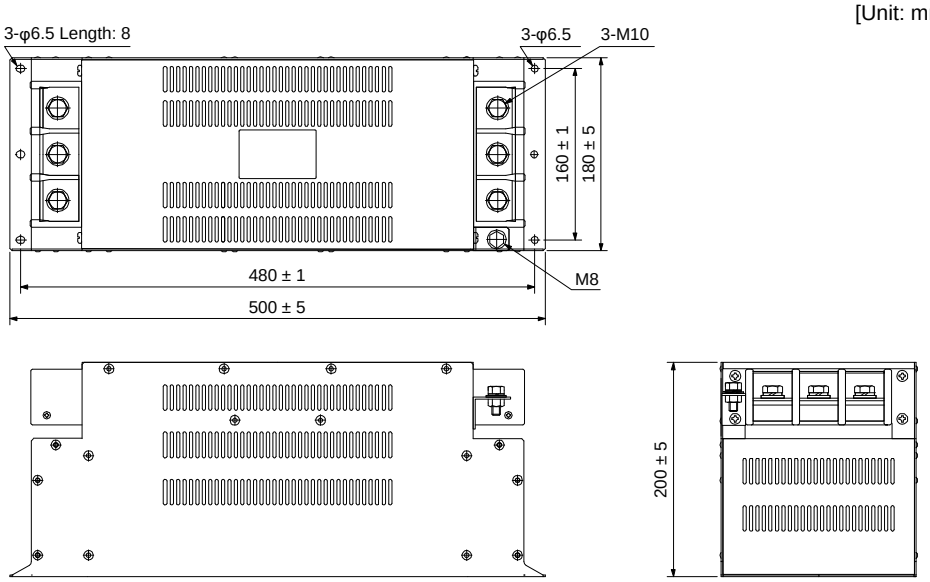

6.4 MR-J4-Series EMC Filter (Recommended) (400 V class)

It is recommended that one of the following filters be used to comply with EN EMC directive. Some EMC filters have large in leakage current.

6.4.1 Combination with the servo amplifier

Servo amplifier	Recommended filter (Soshin Electric)				Mass [kg]
	Model	Rated current [A]	Rated voltage [V AC]	Leakage current [mA]	
MR-J4-60_4(-RJ)/MR-J4-100_4(-RJ)	TF3005C-TX	5	500	5.5	6
MR-J4-200_4(-RJ) to MR-J4-700_4(-RJ)	TF3020C-TX	20			
MR-J4-11K_4(-RJ)	TF3030C-TX	30			7.5
MR-J4-15K_4(-RJ)	TF3040C-TX	40			12.5
MR-J4-22K_4(-RJ)	TF3060C-TX	60			
MR-J4-DU30K_4 to MR-J4-DU55K_4	TF3150C-TX	150	500	5.5	31

6.4.2 Connection example

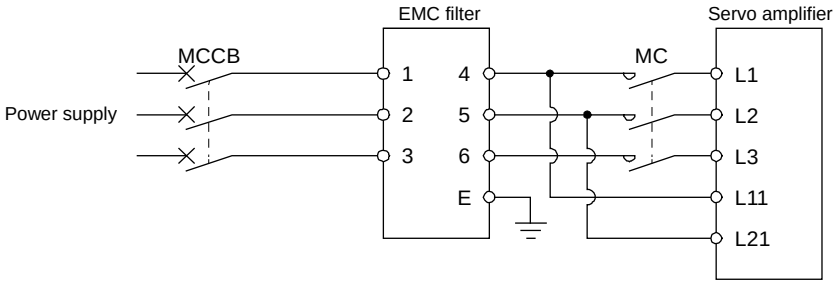

6.4.3 Dimensions

TF3005C-TX/TF3020C-TX/TF3030C-TX

[Unit: mm]

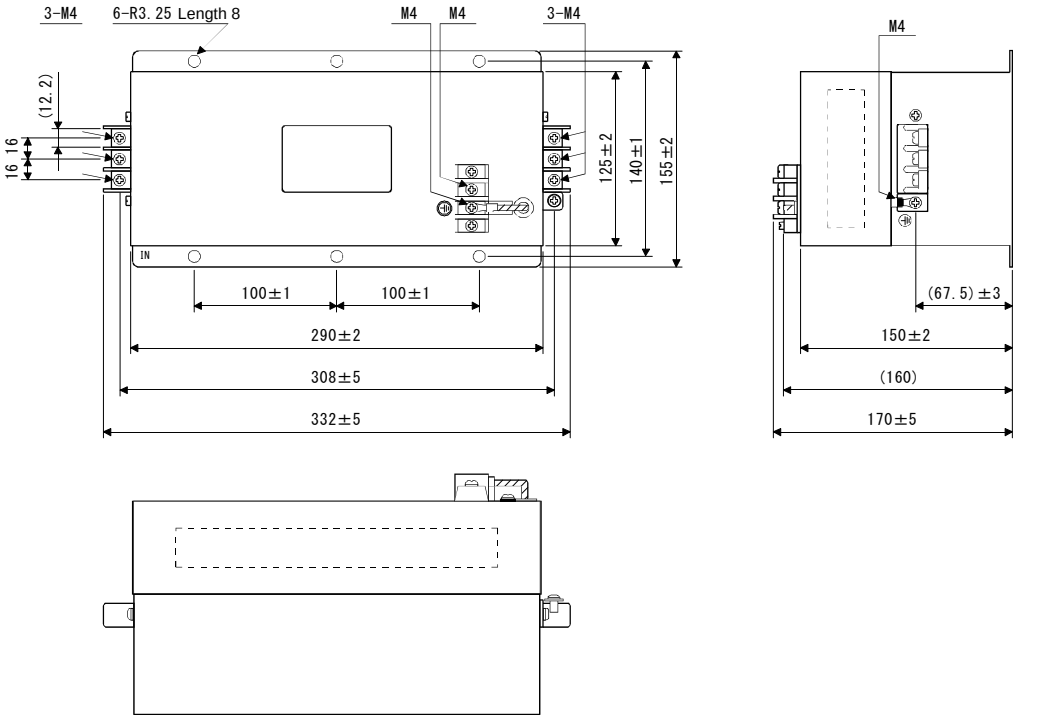

TF3040C-TX/TF3060C-TX

[Unit: mm]

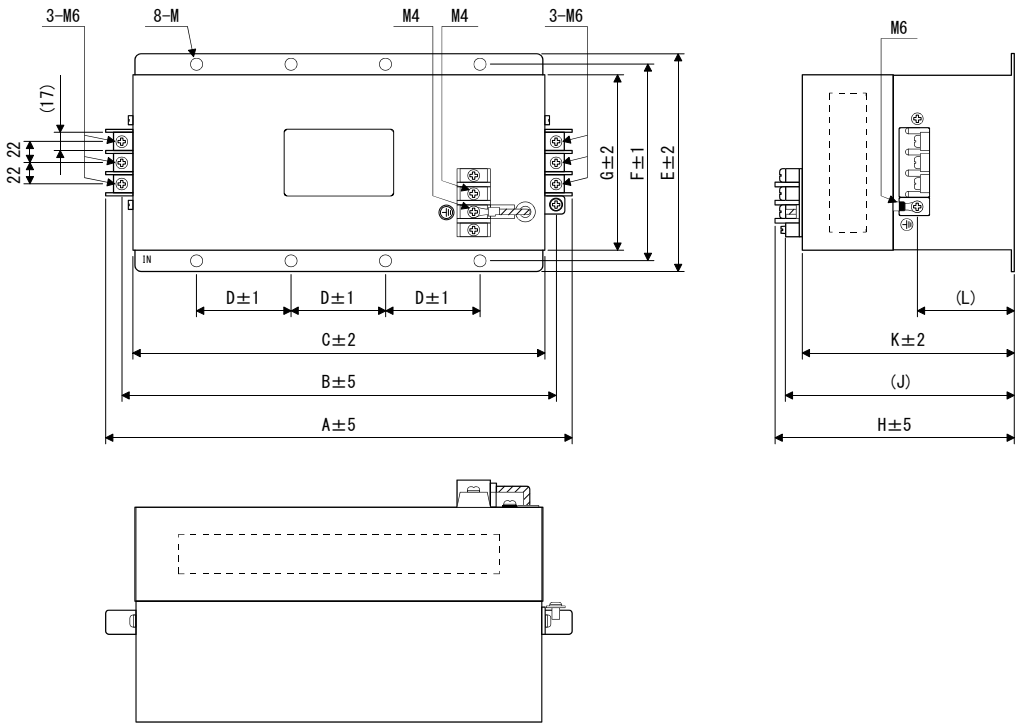

Model	Dimensions [mm]											
	A	B	C	D	E	F	G	H	J	K	L	M
TF3040C-TX	438	412	390	100	175	160	145	200	(190)	180	(91.5)	R3.25 length 8 (For M6)
TF3060C-TX												

TF3150C-TX

[Unit: mm]

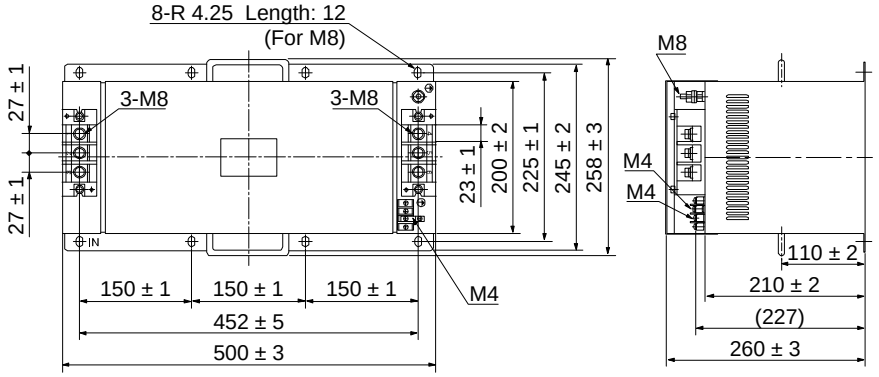

7. POWER FACTOR IMPROVING AC REACTOR/POWER FACTOR IMPROVING DC REACTOR

7.1 MR-J2S-Series Power Factor Improving AC Reactor (200 V/100 V class)

The input power factor is improved to about 90%. For use with a 1-phase power supply, it may be slightly lower than 90%.

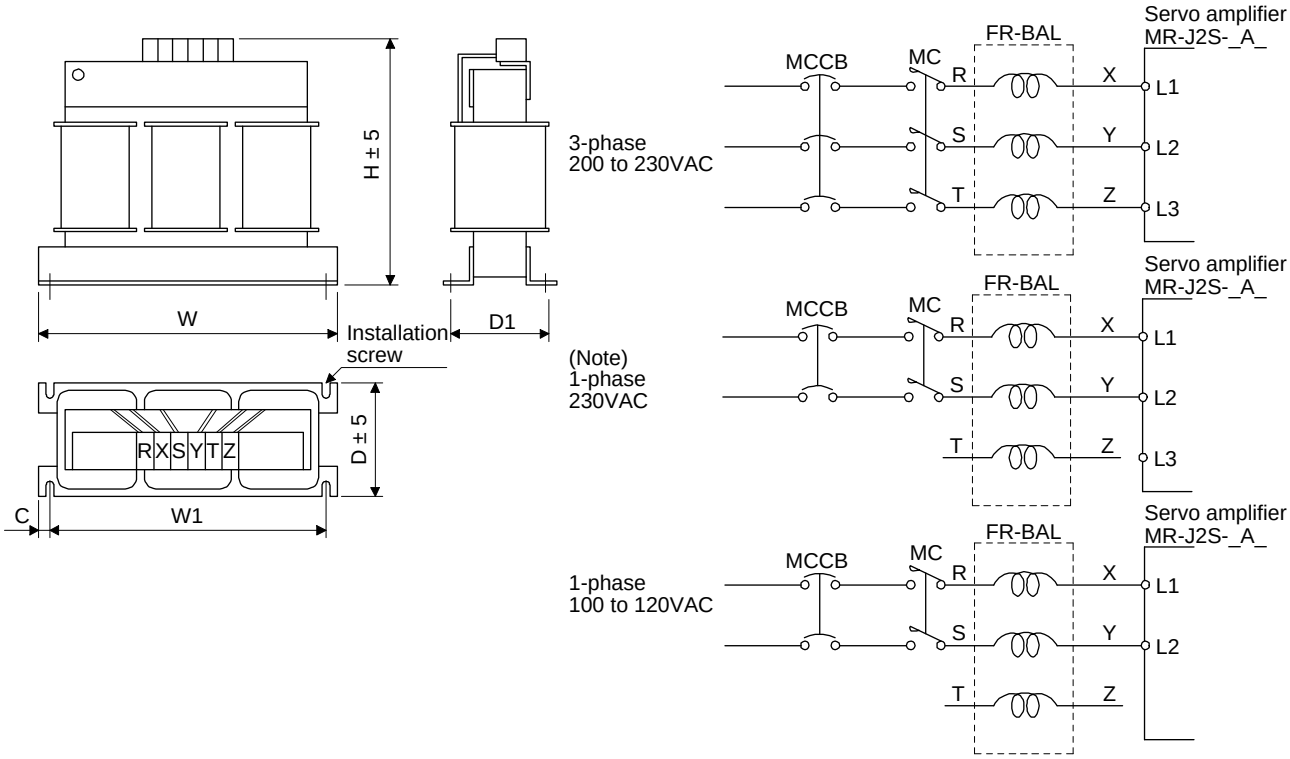

Note. For 1-phase 230 V AC, connect the power supply to L1/L2. Leave L3 open.

Servo amplifier	Power factor improving reactor	Dimensions [mm]						Mounting screw Size	Terminal screw Size	Mass [kg]
		W	W1	H	D	D1	C			
MR-J2S-10_(1) MR-J2S-20_	FR-BAL-0.4K	135	120	115	59	$45^{0}_{-2.5}$	7.5	M4	M3.5	2.0
MR-J2S-40_ MR-J2S-20_1	FR-BAL-0.75K	135	120	115	69	$57^{0}_{-2.5}$	7.5	M4	M3.5	2.8
MR-J2S-60_ MR-J2S-70_ MR-J2S-40_1	FR-BAL-1.5K	160	145	140	71	$55^{0}_{-2.5}$	7.5	M4	M3.5	3.7
MR-J2S-100_	FR-BAL-2.2K	160	145	140	91	$75^{0}_{-2.5}$	7.5	M4	M3.5	5.6
MR-J2S-200_	FR-BAL-3.7K	220	200	192	90	$70^{0}_{-2.5}$	10	M5	M4	8.5
MR-J2S-350_	FR-BAL-7.5K	220	200	194	120	$100^{0}_{-2.5}$	10	M5	M5	14.5
MR-J2S-500_	FR-BAL-11K	280	255	220	135	$100^{0}_{-2.5}$	12.5	M6	M6	19
MR-J2S-700_ MR-J2S-11K_	FR-BAL-15K	295	270	275	133	$110^{0}_{-2.5}$	12.5	M6	M6	27
MR-J2S-15K_	FR-BAL-22K	290	240	301	199	170 ± 5	25	M8	M8	35
MR-J2S-22K_	FR-BAL-30K	290	240	301	219	190 ± 5	25	M8	M8	43

7.2 MR-J2S-Series Power Factor Improving DC Reactor (200 V class)

The input power factor is improved to about 95%.

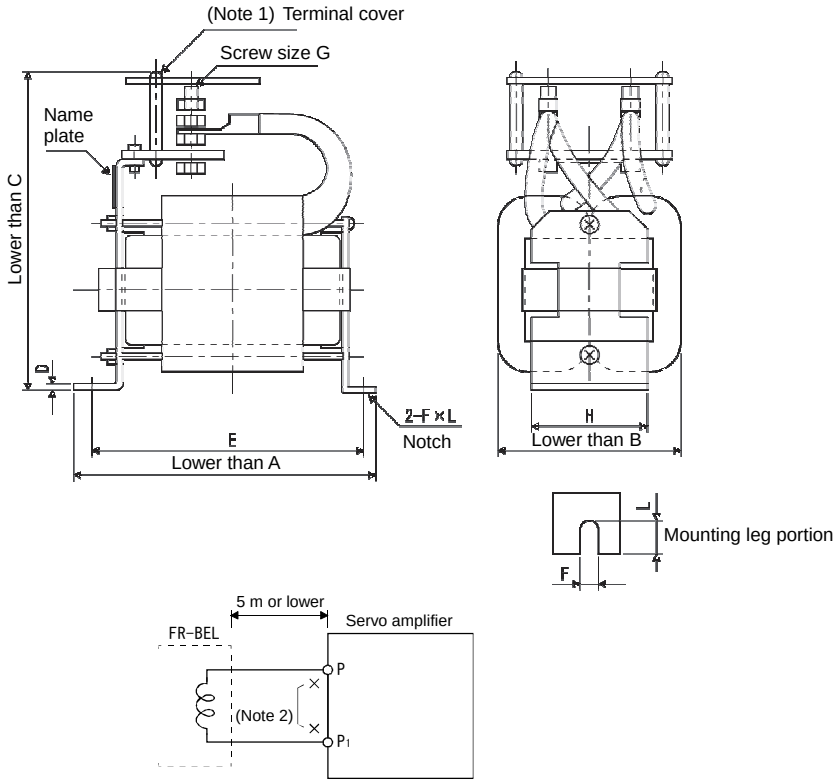

Note 1. Since the terminal cover is supplied, attach it after connecting a wire.
2. When using a power factor improving DC reactor, remove the short-circuit bar between P_1 and P.

Servo amplifier	Power factor improving DC reactor	Dimensions [mm]									Mounting screw Size	Mass [kg]	Electric wire [mm²]
		A	B	C	D	E	F	L	G	H			
MR-J2S-11K_	FR-BEL-15K	170	93	170	2.3	155	6	14	M8	56	M5	3.8	22(AWG4)
MR-J2S-15K_	FR-BEL-22K	185	119	182	2.6	165	7	15	M8	70	M6	5.4	30(AWG2)
MR-J2S-22K_	FR-BEL-30K	185	119	201	2.6	165	7	15	M8	70	M6	6.7	60(AWG1/0)

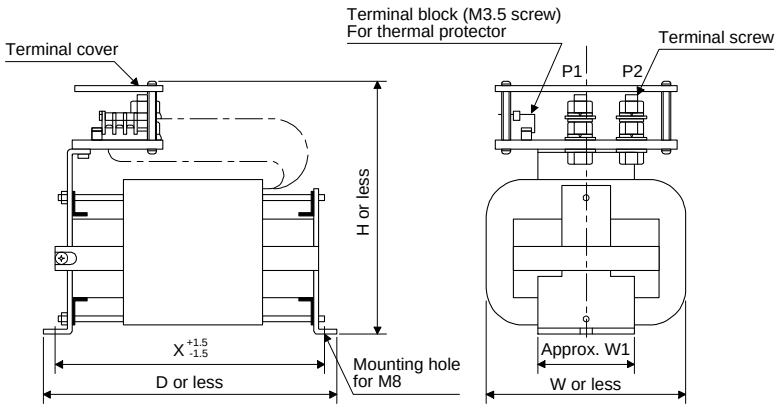

Servo amplifier	Power factor improving DC reactor	Dimensions [mm]					Mounting screw Size	Mass [kg]
		W	D	H	W1	X		
MR-J2S-30K_	MR-DCL30K	135	255	215	80	232	M12	9.5
MR-J2S-37K_	MR-DCL37K	135	255	215	80	232	M12	9.5

7.3 MR-J2S-Series Power Factor Improving AC Reactor (400 V class)

The input power factor is improved to about 90%.

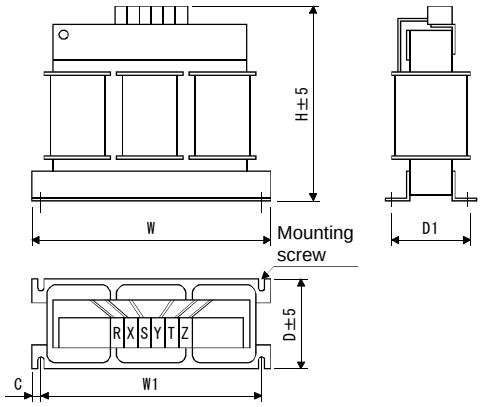

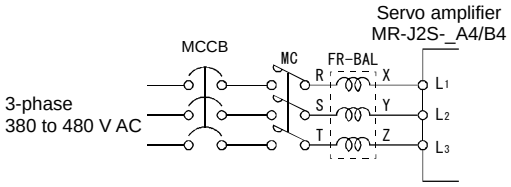

Servo amplifier	Power factor improving reactor	Dimensions [mm]						Mounting screw Size	Terminal screw Size	Mass [kg]
		W	W1	H	D	D1	C			
MR-J2S-60_4	FR-BAL-H1.5K	160	145	140	87	70 $^{0}_{-2.5}$	7.5	M4	M3.5	5.3
MR-J2S-100_4	FR-BAL-H2.2K	160	145	140	91	75 $^{0}_{-2.5}$	7.5	M4	M3.5	5.9
MR-J2S-200_4	FR-BAL-H3.7K	220	200	190	90	70 $^{0}_{-2.5}$	10	M5	M3.5	8.5
MR-J2S-350_4	FR-BAL-H7.5K	220	200	192	120	100 ±5	10	M5	M4	14
MR-J2S-500_4	FR-BAL-H11K	280	255	226	130	100 ±5	12.5	M6	M5	18.5
MR-J2S-700_4	FR-BAL-H15K	295	270	244	130	110 ±5	12.5	M6	M5	27
MR-J2S-11K_4	FR-BAL-H15K	295	270	244	130	110 ±5	12.5	M6	M5	27
MR-J2S-15K_4	FR-BAL-H22K	290	240	269	199	170 ±5	25	M8	M8	Approx. 35
MR-J2S-22K_4	FR-BAL-H30K	290	240	290	219	190 ±5	25	M8	M8	Approx. 43

7.4 MR-J2S-Series Power Factor Improving DC Reactor (400 V class)

The input power factor is improved to about 95%.

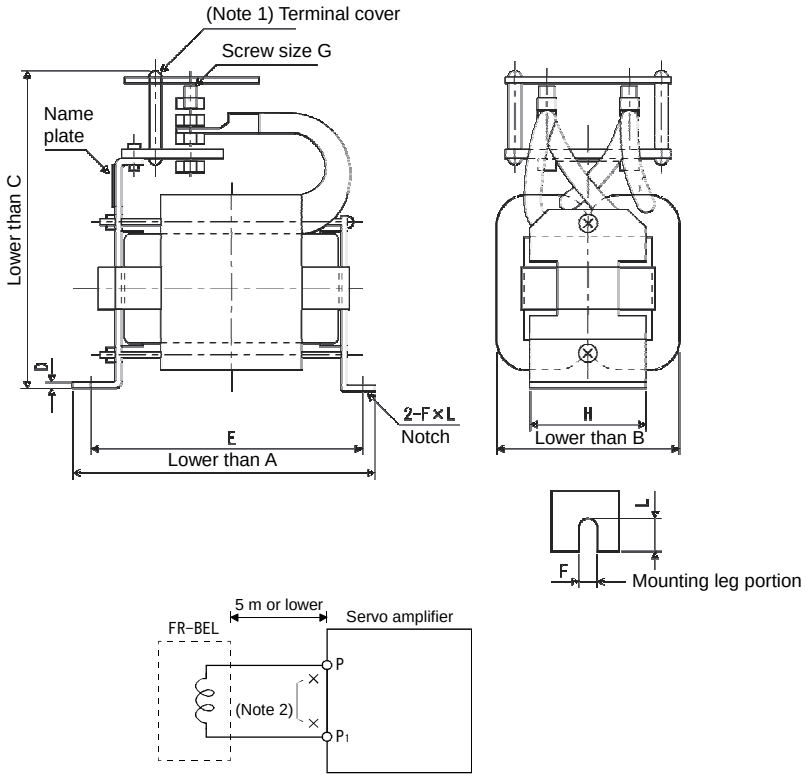

Note 1. Since the terminal cover is supplied, attach it after connecting a wire.
2. When using a power factor improving DC reactor, remove the short-circuit bar between P_1 and P.

Servo amplifier	Power factor improving DC reactor	Dimensions [mm]									Mounting screw Size	Mass [kg]	Electric wire [mm²]
		A	B	C	D	E	F	L	G	H			
MR-J2S-11K_4	FR-BEL-H15K	170	93	160	2.3	155	6	14	M6	56	M5	3.7	8(AWG8)
MR-J2S-15K_4	FR-BEL-H22K	185	119	171	2.6	165	7	15	M6	70	M6	5.0	22(AWG4)
MR-J2S-22K_4	FR-BEL-H30K	185	119	189	2.6	165	7	15	M6	70	M6	6.7	

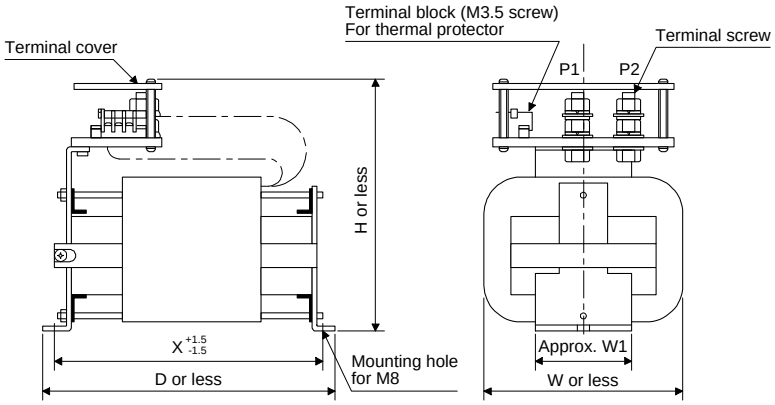

SERVO AMPLIFIER	Power factor improving DC reactor	Dimensions [mm]					Mounting screw Size	Mass [kg]
		W	D	H	W1	X		
MR-J2S-30K_4	MR-DCL30K-4	135	205	200	75	175	M8	6.5
MR-J2S-37K_4	MR-DCL37K-4	135	225	200	80	197	M8	7
MR-J2S-45K_4	MR-DCL45K-4	135	240	200	80	212	M8	7.5
MR-J2S-55K_4	MR-DCL55K-4	135	260	215	80	232	M8	9.5

7.5 MR-J4-Series Power Factor Improving DC Reactor (200 V class)

The following shows the advantages of using power factor improving DC reactor.

- It improves the power factor by increasing the form factor of the servo amplifier's input current.
- It decreases the power supply capacity.
- The input power factor is improved to about 85%.
- As compared to the power factor improving AC reactor (FR-HAL), it decreases the loss.

When using the power factor improving DC reactor to the servo amplifier, remove the short bar across P3 and P4. If it remains connected, the effect of the power factor improving DC reactor is not produced.

When used, the power factor improving DC reactor generates heat. To release heat, therefore, leave a 10 cm or more clearance at each of the top and bottom, and a 5 cm or more clearance on each side.

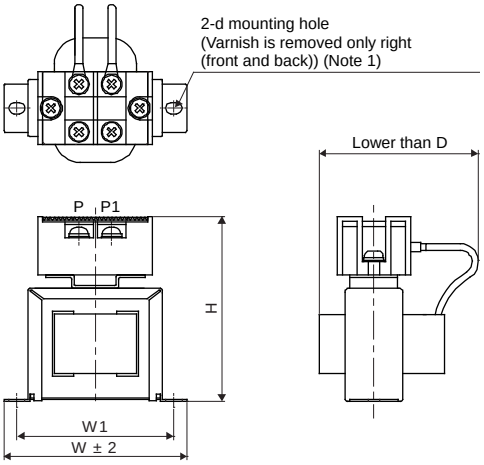

Fig. 9.1

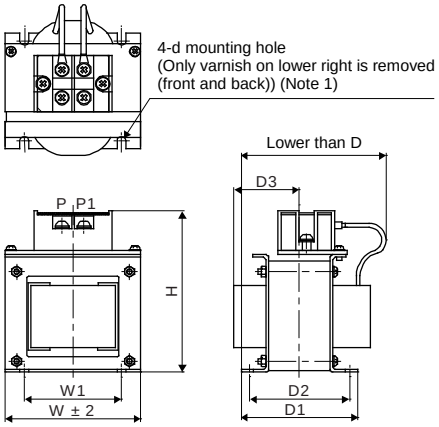

Fig. 9.2

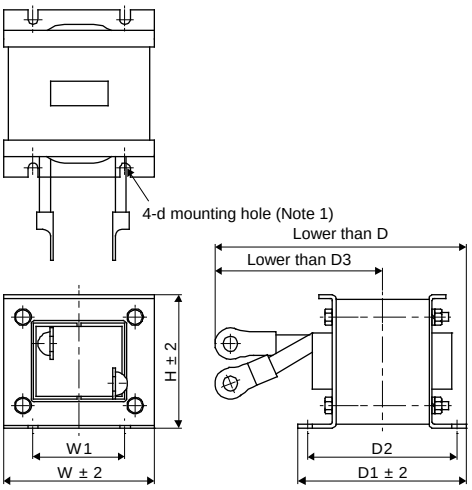

Fig. 9.3

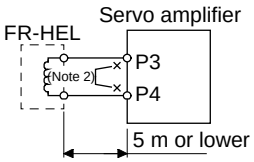

Note 1. Use this for grounding.
2. When using the power factor improving DC reactor, remove the short bar across P3 and P4.

Servo amplifier	Power factor improving DC reactor	Dimensions	Dimensions [mm]								Terminal size	Mass [kg]	Electric wire [mm²] (Note 2)
			W	W1	H	D (Note 1)	D1	D2	D3	d			
MR-J4-10_(-RJ) MR-J4-20_(-RJ)	FR-HEL-0.4K	Fig. 9.1	70	60	71	61		21		M4	M4	0.4	2 (AWG 14)
MR-J4-40_(-RJ)	FR-HEL-0.75K		85	74	81	61		21		M4	M4	0.5	
MR-J4-60_(-RJ) MR-J4-70_(-RJ)	FR-HEL-1.5K		85	74	81	70		30		M4	M4	0.8	
MR-J4-100_(-RJ)	FR-HEL-2.2K		85	74	81	70		30		M4	M4	0.9	
MR-J4-200_(-RJ)	FR-HEL-3.7K	Fig. 9.2	77	55	92	82	66	57	37	M4	M4	1.5	
MR-J4-350_(-RJ)	FR-HEL-7.5K		86	60	113	98	81	72	43	M4	M5	2.5	3.5 (AWG 12)
MR-J4-500_(-RJ)	FR-HEL-11K		105	64	133	112	92	79	47	M6	M6	3.3	5.5 (AWG 10)
MR-J4-700_(-RJ)	FR-HEL-15K		105	64	133	115	97	84	48.5	M6	M6	4.1	8 (AWG 8)
MR-J4-11K_(-RJ)	FR-HEL-15K		105	64	133	115	97	84	48.5	M6	M6	4.1	14 (AWG 6)
MR-J4-15K_(-RJ)	FR-HEL-22K		105	64	93	175	117	104	115 (Note 1)	M6	M10	5.6	22 (AWG 4)
MR-J4-22K_(-RJ)	FR-HEL-30K	Fig. 9.3	114	72	100	200	125	101	135 (Note 1)	M6	M10	7.8	38 (AWG 2)

Note 1. These are maximum dimensions. The dimension varies depending on the input/output lines.
2. Selection conditions of wire size are as follows.
Electric wire type: 600 V grade heat-resistant polyvinyl chloride insulated wire (HIV wire)
Wiring condition: In-air, one-row wiring

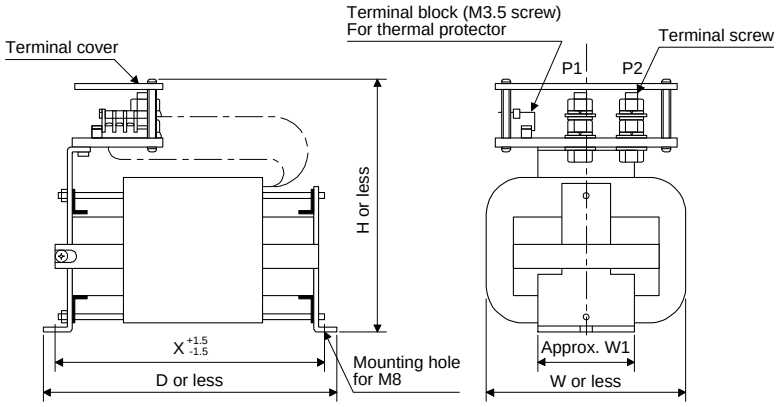

Servo amplifier	Power factor improving DC reactor	Dimensions [mm]					Mounting screw Size	Mass [kg]
		W	D	H	W1	X		
MR-J4-DU30K_	MR-DCL30K	135	255	215	80	232	M12	9.5
MR-J4-DU37K_	MR-DCL37K	135	255	215	80	232	M12	9.5

7.6 MR-J4-Series Power Factor Improving AC Reactor (200 V/100 V class)

The following shows the advantages of using power factor improving AC reactor.

- It improves the power factor by increasing the form factor of the servo amplifier's input current.
- It decreases the power supply capacity.
- The input power factor is improved to about 80%.

When using power factor improving reactors for two servo amplifiers or more, make sure to connect a power factor improving reactor to each servo amplifier. If using only one power factor improving reactor, enough improvement effect of phase factor cannot be obtained unless all servo amplifiers are operated.

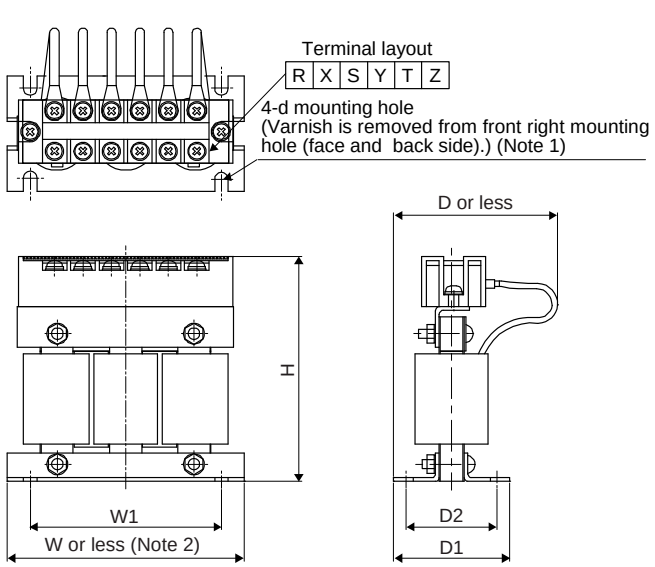

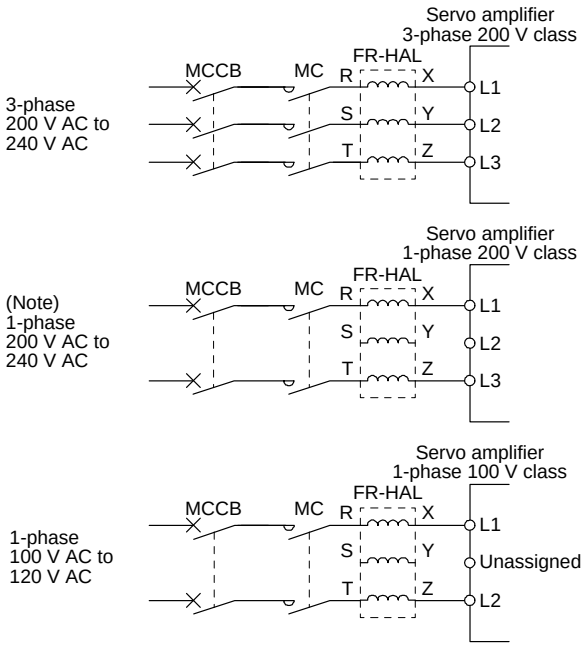

Fig. 9.4

Note 1. Use this for grounding.
2. W ± 2 is applicable for FR-HAL-0.4K to FR-HAL-1.5K.

Note. For 1-phase 200 V AC to 240 V AC, connect the power supply to L1 and L3. Leave L2 open.

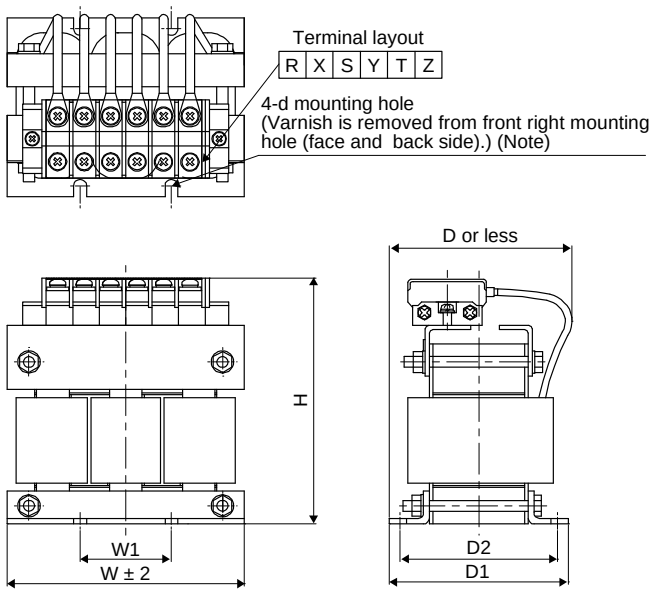

Figure 9.5

Note. Use this for grounding.

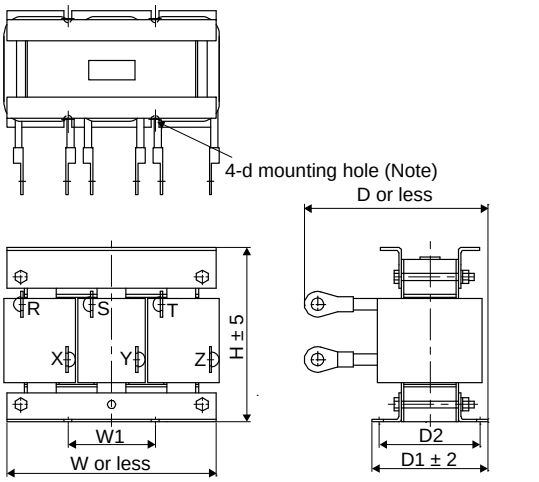

Fig. 9.6

Note. Use this for grounding.

Servo amplifier	Power factor improving DC reactor	Dimensions	Dimensions [mm]							Terminal size	Mass [kg]
			W	W1	H	D (Note 1)	D1	D2	d		
MR-J4-10_(-RJ) MR-J4-20_(-RJ)	FR-HAL-0.4K	Fig. 9.4	104	84	99	72	51	40	M5	M4	0.6
MR-J4-40_(-RJ) MR-J4-10_1(-RJ)	FR-HAL-0.75K		104	84	99	74	56	44	M5	M4	0.8
MR-J4-60_(-RJ) MR-J4-70_(-RJ) MR-J4-20_1(-RJ)	FR-HAL-1.5K		104	84	99	77	61	50	M5	M4	1.1
MR-J4-100_(-RJ) (3-phase power supply input) MR-J4-40_1(-RJ)	FR-HAL-2.2K		115 (Note)	40	115	77	71	57	M6	M4	1.5
MR-J4-100_(-RJ) (1-phase power supply input) MR-J4-200_(-RJ) (3-phase power supply input)	FR-HAL-3.7K		115 (Note)	40	115	83	81	67	M6	M4	2.2
MR-J4-200_(-RJ) (1-phase power supply input)	FR-HAL-5.5K		115 (Note)	40	115	83	81	67	M6	M4	2.3
MR-J4-350_(-RJ)	FR-HAL-7.5K	Fig. 9.5	130	50	135	100	98	86	M6	M5	4.2
MR-J4-500_(-RJ)	FR-HAL-11K		160	75	164	111	109	92	M6	M6	5.2
MR-J4-700_(-RJ)	FR-HAL-15K		160	75	167	126	124	107	M6	M6	7.0
MR-J4-11K_(-RJ)	FR-HAL-15K		160	75	167	126	124	107	M6	M6	7.0
MR-J4-15K_(-RJ)	FR-HAL-22K		185 (Note)	75	150	158	100	87	M6	M8	9.0
MR-J4-22K_(-RJ)	FR-HAL-30K	Fig. 9.6	185 (note)	75	150	168	100	87	M6	M10	9.7

Note. These are maximum dimensions. The dimension varies depending on the input/output lines.

7.7 MR-J4-Series Power Factor Improving DC Reactor (400 V class)

The following shows the advantages of using power factor improving DC reactor.
• It improves the power factor by increasing the form factor of the servo amplifier's input current.
• It decreases the power supply capacity.
• The input power factor is improved to about 85%.
• As compared to the power factor improving AC reactor (FR-HAL-H), it decreases the loss.
When using the power factor improving DC reactor to the servo amplifier, remove the short bar across P3 and P4. If it remains connected, the effect of the power factor improving DC reactor is not produced.
When used, the power factor improving DC reactor generates heat. To release heat, therefore, leave a 10 cm or more clearance at each of the top and bottom, and a 5 cm or more clearance on each side.

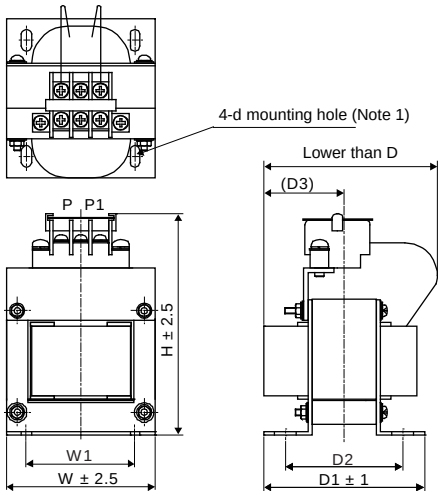

Fig. 9.7

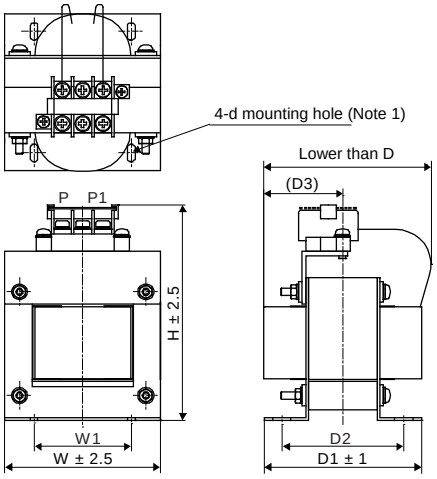

Fig. 9.8

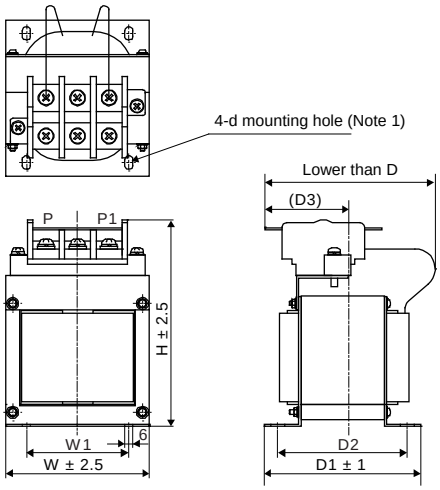

Fig. 9.9

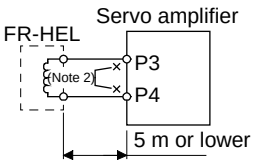

Note 1. Use this for grounding.
2. When using the power factor improving DC reactor, remove the short bar across P3 and P4.

Servo amplifier	Power factor improving DC reactor	Dimensions	Dimensions [mm]								Terminal size	Mass [kg]	Electric wire [mm²] (Note)
			W	W1	H	D	D1	D2	D3	d			
MR-J4-60_4(-RJ)	FR-HEL-H1.5K	Fig. 9.7	66	50	100	80	74	54	37	M4	M3.5	1.0	2 (AWG 14)
MR-J4-100_4(-RJ)	FR-HEL-H2.2K		76	50	110	80	74	54	37	M4	M3.5	1.3	2 (AWG 14)
MR-J4-200_4(-RJ)	FR-HEL-H3.7K	Fig. 9.8	86	55	120	95	89	69	45	M4	M4	2.3	2 (AWG 14)
MR-J4-350_4(-RJ)	FR-HEL-H7.5K		96	60	128	105	100	80	50	M5	M4	3.5	2 (AWG 14)
MR-J4-500_4(-RJ)	FR-HEL-H11K		105	75	137	110	105	85	53	M5	M5	4.5	3.5 (AWG 12)
MR-J4-700_4(-RJ)	FR-HEL-H15K	Fig. 9.9	105	75	152	125	115	95	62	M5	M6	5.0	5.5 (AWG 10)
MR-J4-11K_4(-RJ)													8 (AWG 8)
MR-J4-15K_4(-RJ)	FR-HEL-H22K		133	90	178	120	95	75	53	M5	M6	6.0	8 (AWG 8)
MR-J4-22K_4(-RJ)	FR-HEL-H30K		133	90	178	120	100	80	56	M5	M6	6.5	14 (AWG 6)

Note. Selection conditions of wire size are as follows.
Electric wire type: 600 V grade heat-resistant polyvinyl chloride insulated wire (HIV wire)
Wiring condition: In-air, one-row wiring

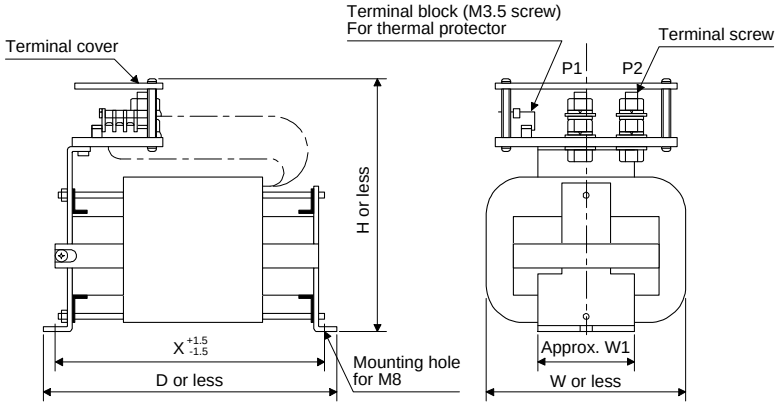

Servo amplifier	Power factor improving DC reactor	Dimensions [mm]					Mounting screw Size	Mass [kg]
		W	D	H	W1	X		
MR-J4-DU30K_4	MR-DCL30K-4	135	205	200	75	175	M8	6.5
MR-J4-DU37K_4	MR-DCL37K-4	135	225	200	80	197	M8	7
MR-J4-DU45K_4	MR-DCL45K-4	135	240	200	80	212	M8	7.5
MR-J4-DU55K_4	MR-DCL55K-4	135	260	215	80	232	M8	9.5

7.8 MR-J4-Series Power Factor Improving AC Reactor (400 V class)

The following shows the advantages of using power factor improving AC reactor.
• It improves the power factor by increasing the form factor of the servo amplifier's input current.
• It decreases the power supply capacity.
• The input power factor is improved to about 80%.
When using power factor improving reactors for two servo amplifiers or more, make sure to connect a power factor improving reactor to each servo amplifier. If using only one power factor improving reactor, enough improvement effect of phase factor cannot be obtained unless all servo amplifiers are operated.

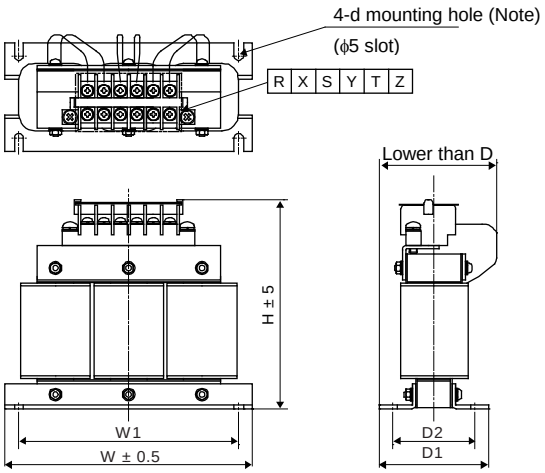

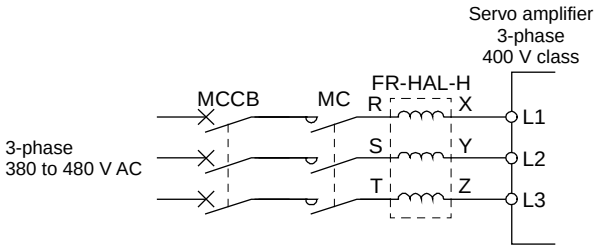

Fig. 9.10

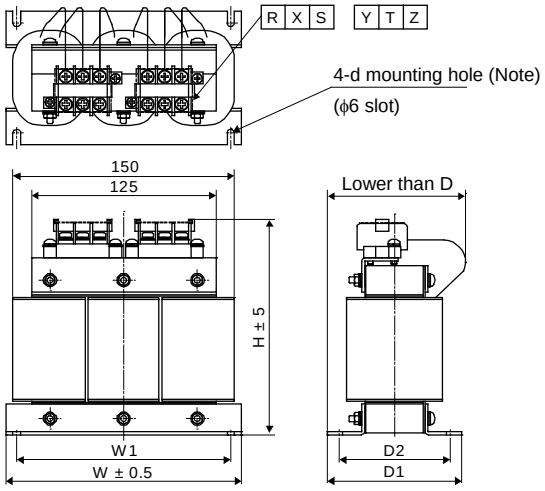

Fig. 9.11

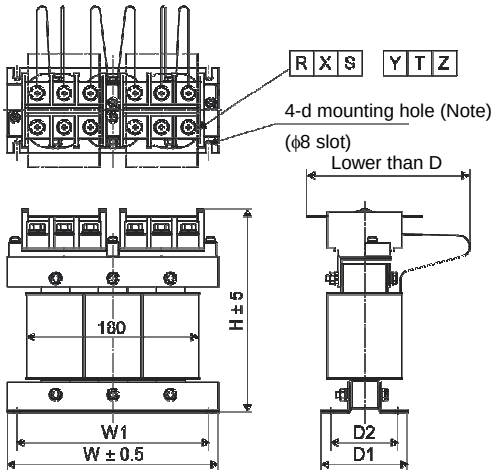

Fig. 9.12

Note. Use this for grounding.

Servo amplifier	Power factor improving DC reactor	Dimensions	Dimensions [mm]							Terminal size	Mass [kg]
			W	W1	H	D (Note)	D1	D2	d		
MR-J4-60_4(-RJ)	FR-HAL-H1.5K	Fig. 9.10	135	120	115	59	59.6	45	M4	M3.5	1.5
MR-J4-100_4(-RJ)	FR-HAL-H2.2K		135	120	115	59	59.6	45	M4	M3.5	1.5
MR-J4-200_4(-RJ)	FR-HAL-H3.7K		135	120	115	69	70.6	57	M4	M3.5	2.5
MR-J4-350_4(-RJ)	FR-HAL-H7.5K	Fig. 9.11	160	145	142	91	91	75	M4	M4	5.0
MR-J4-500_4(-RJ)	FR-HAL-H11K		160	145	146	91	91	75	M4	M5	6.0
MR-J4-700_4(-RJ) MR-J4-11K_4(-RJ)	FR-HAL-H15K		220	200	195	105	90	70	M5	M5	9.0
MR-J4-15K_4(-RJ)	FR-HAL-H22K	Fig. 9.12	220	200	215	170	90	70	M5	M8	9.5
MR-J4-22K_4(-RJ)	FR-HAL-H30K		220	200	215	170	96	75	M5	M8	11

Note. These are maximum dimensions. The dimension varies depending on the input/output lines.

8. SETUP SOFTWARE

8.1 MR-J2S Series Setup Software

Setup software (MRZJW3-SETUP161E) uses the communication function of the servo amplifier to change parameter setting values, display graphs, and perform test operations, etc., on the personal computer.

8.1.1 Specifications

Item	Description
Communication signal	RS-232C
Baud rate [bps]	57600/38400/19200/9600
Monitor	Display all, high-speed display, graph display (Minimum resolution changes with the processing speed of the personal computer.)
Alarm	Display, history, amplifier data
Diagnosis	DI/DO display, display of the reason for no rotation, power ON cumulative display, software No. display, motor information display, tuning data display, ABS data display, VC automatic offset display, axis name setting
Parameter	Parameter list, turning, change list, detailed information
Test operation	JOG operation, positioning operation, motor-less operation, DO forced output, and program operation
Advanced function	Machine analyzer gain search, machine simulation
File operation	Data read, save, print
Others	Automatic operation, station number setting, help display

8.2 MR-J4-Series MR Configurator2

POINT

●MR-J4-_A_-RJ servo amplifiers are supported with software version 1.19V or later.

MR Configurator2 (SW1DNC-MRC2-E) uses the communication function of the servo amplifier to perform parameter setting changes, graph display, test operation, etc. on a personal computer.

8.2.1 Specifications

Item	Description
Project	Create/read/save/delete project, system setting, and print
Parameter	Parameter setting, amplifier axis name setting, parameter converter (Note 1)
Positioning data (Note 2)	Point table, program, indirect addressing
Monitor	Display all, I/O monitor, graph, and ABS data display
Diagnostics	Alarm display, alarm onset data display, drive recorder, display of the reason for no rotation, system configuration, life diagnosis, machine diagnosis
Test operation	JOG operation, positioning operation, motor-less operation, DO forced output, and program operation, Test operation event information, single-step feed (Note 2)
Adjustment	One-touch tuning, tuning, and machine analyzer
Others	Servo assistant, parameter setting range update, help display, connection to MITSUBISHI ELECTRIC FA Global Website

Note 1. This function is available only in standard control mode.
2. This function is available only for MR-J4-_A_-RJ.

8.3 System Requirements

8.3.1 Components

To use this software, the following components are required in addition to the servo amplifier and servo motor.

Equipment		(Note 1) Description
Personal computer (Note 2, 3, 4, 5, 7)	OS	Microsoft® Windows® 10 Home Operating System Microsoft® Windows® 10 Pro Operating System Microsoft® Windows® 10 Enterprise Operating System Microsoft® Windows® 10 Education Operating System Microsoft® Windows® 8.1 Operating System Microsoft® Windows® 8.1 Pro, Operating System Microsoft® Windows® 8.1 Enterprise Operating System Microsoft® Windows® 8 Operating System Microsoft® Windows® 8 Pro Operating System Microsoft® Windows® 8 Enterprise Operating System Microsoft® Windows® 7 Starter Operating System Microsoft® Windows® 7 Home Premium Operating System Microsoft® Windows® 7 Professional Operating System Microsoft® Windows® 7 Ultimate Operating System Microsoft® Windows® 7 Enterprise Operating System
	CPU	Desktop personal computer: Intel® Celeron® processor, 2.8 GHz or more recommended Notebook personal computer: Intel® Pentium® M processor, 1.7 GHz or more recommended
	Memory	1GB or more recommended (For 32-bit edition) 2GB or more recommended (For 64-bit edition)
	Hard Disk	1.5 GB or more of free space
	Communication interface	USB port (Note 6).
Browser	Windows® Internet Explorer® 4.0 or later (Note 1)	
Display	One whose resolution is 1024 × 768 or more and that can provide a high color (16 bit) display. Connectable with the above personal computer.	
Keyboard	Connectable with the above personal computer.	
Mouse	Connectable with the above personal computers.	
Printer	Connectable with the above personal computer.	
USB cable	MR-J3USBCBL3M	

Note 1. Microsoft, Windows and Internet Explorer are registered trademarks or trademarks of Microsoft Corporation in the United States and other countries.
Celeron, Pentium is the registered trademarks of Intel Corporation.

2. When Windows® 7 or later is used, NET Framework 3.5 (including .NET2.0 and 3.0) must be enabled.
3. When the following functions are used, this product may not operate correctly.• Windows Program Compatibility mode
   - Windows® Program Compatibility mode
   - Fast User Switching
   - Remote Desktop
   - Windows XP Mode
   - Windows touch or touch
   - Modern UI
   - Client Hyper-V
   - Tablet mode
   - Virtual desktop
4. In the following cases, the display of this product may not operate correctly.
   - The size of the text or other items on the screen is set to other than the prescribed value (96DPI, 100%. 9pt, etc.).
   - Resolution of the screen is changed during operation.
   - The screen is set as multi display.
5. When using this software with Windows® 7 or later, log in as "Standard user" or "Administrator".
6. 64-bit Windows is not supported.

8.3.2 Connection with servo amplifier

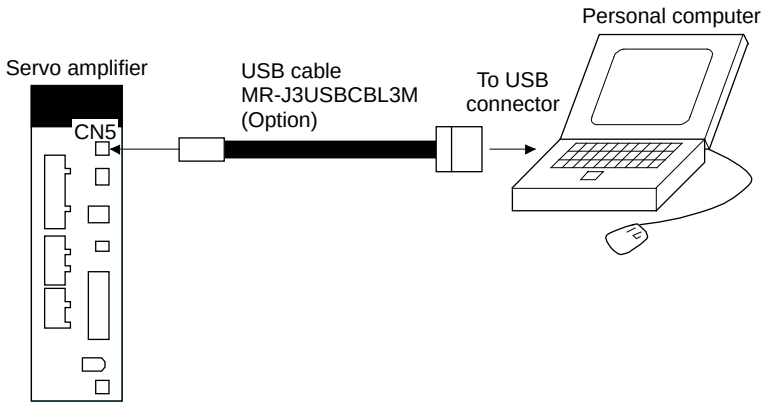

8.3.3 Points to note for use of the USB communication function

To prevent an electric shock or malfunction of the servo amplifier, follow the instructions below.

(1) Connection of the power supply of a personal computer
Connect the power supply of a personal computer following the procedure below.

(a) When using a personal computer with AC power
1) When using a personal computer whose power plug has three pins or a grounding wire, use a grounded outlet or ground the grounding wire.

2) When using a personal computer whose power plug has two pins and no grounding wire, connect the personal computer to the servo amplifier following the procedure below.

a) Remove the power plug of the personal computer from the AC outlet.

b) Verify that the power plug has been removed from the AC outlet, and then connect the servo amplifier to other devices.

c) Insert the power plug of the personal computer into the AC outlet.

(b) When using a battery-driven personal computer, use the computer as is.

(2) Connection to other devices by use of the servo amplifier communication function
When the servo amplifier becomes charged due to connection to the personal computer and the charged servo amplifier is connected to other devices, the servo amplifier or the connected devices may be damaged. Connect the servo amplifier to other devices following the procedure below.

(a) Turn off the power of the devices connected to the servo amplifier.

(b) Turn off the power of the servo amplifier connected to the personal computer, and then verify that the charge lamp is not lit.

(c) Connect the servo amplifier to the devices.

(d) Turn on the servo amplifier and the devices connected to it.

MEMO

Part 10
Startup Procedure Manual

Part 10: Startup Procedure Manual

1. STARTUP

⚠ WARNING	●Do not operate the switches with wet hands. Otherwise, it may cause an electric shock.

⚠ CAUTION	●Before starting operation, check the parameters. Improper settings may cause some machines to operate unexpectedly. ●The servo amplifier heat sink, regenerative resistor, servo motor, etc., may be hot while power is on or for some time after power-off. Take safety measures, example, provide covers to avoid accidentally touching the parts (cables, etc.) by hand. Otherwise, it may cause a burn injury and parts damaged. ●During operation, never touch the rotor of the servo motor. Otherwise, it may cause injury.

1.1 Switching power on for the first time

When switching power on for the first time, follow this section to make a startup.

1.1.1 Startup procedure

Parameter settings check for the currently used model	...	Confirm the parameter settings of the currently used MR-J2S servo amplifier with the display or with the setup software and record them.
↓		
Wiring check	...	Visually verify that the wires are correctly connected to the servo amplifier and the servo motor.
↓		
Surrounding environment check	...	Check the surrounding environment of the servo amplifier and servo motor.
↓		
Parameter setting (Note 1)	...	Set the parameters as necessary, such as the used control mode and regenerative option selection. (Refer to this Replacement Manual.)
↓		
Test operation of the servo motor alone in the test operation mode (Note 1) (Note 2)	...	For the test operation, with the servo motor disconnected from the machine and operated at the speed as low as possible, check whether the servo motor rotates correctly.
↓		
Test operation of the servo motor alone by commands (Note 1) (Note 2)	...	For the test operation with the servo motor disconnected from the machine and operated at the speed as low as possible, give commands to the servo amplifier and check whether the servo motor rotates correctly.
↓		
Test operation with the servo motor and machine connected	...	After connecting the servo motor to the machine, check the motions of the machine by sending operation commands from a higher-level command-issuing device.
↓		
Gain adjustment (Note 1)	...	Make gain adjustment to optimize the machine motions.
↓		
Actual operation (Note 2)	...	Perform a home position return as necessary when in position control mode.
↓		
Stop	...	Stop giving commands and stop operation. In addition, check the conditions when the servo motor operation stops.

Note 1. For details about the settings for each servo amplifier and its test operation, refer to the applicable Servo Amplifier Instruction Manual.
If the gain of the existing servo amplifier is extremely high, there may be slight differences in characteristics upon primary replacement. Make sure to set the gain again.
2. When turning on the power supply, also turn on the 24 V DC power supply for the external interface. Otherwise, AL. E6.1 occurs.

[Appendix 1] Summary of MR-J4_B_-RJ020 + MR-J4-T20

[Appendix 1] Summary of MR-J4_B_-RJ020 + MR-J4-T20

1. SUMMARY

This [Appendix 1] describes the "MR-J4-_B_-RJ020" servo amplifier that supports the SSCNET conversion unit for MR-J2S-_B_ and "MR-J4-T20" SSCNET conversion unit for MR-J2S-_B_.

Ensure to use the MR-J4-T20 with the MR-J4-_B_-RJ020.

Combining MR-J4-_B_-RJ020 with MR-J4-T20 makes it possible to connect MR-J4-_B_-RJ020 with SSCNET for MR-J2S-_B_

The MR-J4-_B_-RJ020 servo amplifier is equipped with "J2S compatible mode (factory default)" and "J4 mode" as the operation mode. "J2S compatible mode" is the operation mode compatible with the conventional features of the MR-J2S-B series.

When using in the J4 mode, refer to "[Appendix 1] 12 MODE SWITCHING METHOD".

1.1 Features

1.1.1 Servo amplifier connectable to SSCNET compatible controller

MELSERVO-J4 series servo amplifier connectable to SSCNET connected to MR-J2S-_B_

Using the SSCNET conversion unit for MR-J2S-_B_, the MR-J4-_B_ servo amplifier can be connected to the SSCNET compatible servo system controller for MR-J2S-_B_.

- The MR-J4-_B_-RJ020 servo amplifier combined with the MR-J4-T20 SSCNET conversion unit can be connected to the SSCNET compatible servo system controller for MR-J2S-_B_.
- The MR-J4-compatible HG series servo motor can be driven.
- One SSCNET conversion unit is required per amplifier.
- New features of MR-J4 cannot be used because the amplifier operates in J2S mode.
- The servo amplifier is recognized as MR-J2S by the controller. However, for the parameter described in the following table, changes to the program or the parameter are required as necessary.

MR-J4-_B_-RJ020 servo amplifier that supports the SSCNET conversion unit for MR-J2S-_B_
MR-J4-T20 SSCNET conversion unit for MR-J2S-_B_

Parameter that need to be checked for if a change is required

Parameter number	Name	Initial value	Setting value	Description
Pr. 25	Adaptive vibration suppression control	0000h	0000h	The MR-J4-_B_-RJ020 servo amplifier with software version A9 or later is compatible with adaptive vibration suppression control. For details, refer to "9.2 (8) Adaptive vibration suppression control function" in this section.

1.1.2 SSCNET conversion unit "MR-J4-T20"

- Connect the conversion unit to connector CN9 on the side of MR-J4-_B_-RJ020.
- The mounting method for guide pins, etc., is the same as that for optional MR-J3 units such as MR-J3-D01.
- Two SSCNET connectors are provided on the SSCNET conversion unit.

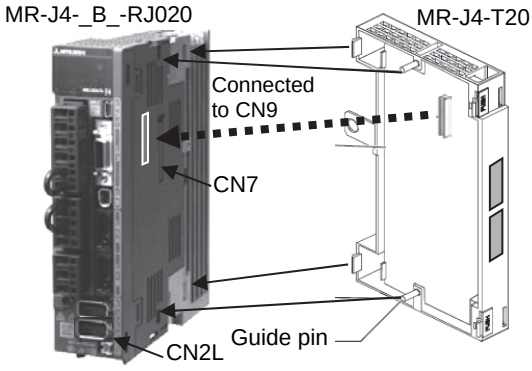

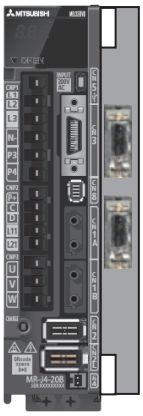

2. DIFFERENCES BETWEEN MR-J2S-_B_ AND MR-J4-_B_-RJ020

2.1 Function Comparison Table

Item		MR-J2S-_B	MR-J4-_B_-RJ020 MR-J4-T20	Remarks
System	Standard	○	○	
	Full.	Special specification	○	
	Lin.	Special specification	×	
	DDM	×	×	
Supported network		SSCNET	SSCNET	
Supported motors		MR-J2S catalog motor MR-J2S optional motor	HG motor (Operates as 17 bits) HC-KFS motor HC-MFS motor HC-LFS motor HC-SFS motor HC-RFS motor HC-UFS motor HA-LFS motor	For details, refer to "[Appendix 1] Chapter 7" of this document.
I/O power supply		Internal 24 V	External 24 V	An external power supply (24 V 100 mA) is required for DIO.
Battery		MR-BAT / A6BAT	MR-BAT6V1SET	
Serial communication		Half pitch 20 pins	miniD-Sub	Using conversion cable. MR-J4T20CH00
MR-J2S control function	Auto Tuning	○	○	Gain compatibility
	Model applicable control	○	○	
	Machine resonance suppression filter	○	○	
	Machine analyzer function	○	○	
	Machine simulation	○	× (Note 1)	
	Gain search function	○	× (Note 1)	
	Adaptive vibration suppression control	○	○ (Note 1, 2)	For details, refer to "9.2 (8) Adaptive vibration suppression control function" in this section.

Note 1. This is available for the MR-J4-_B_-RJ020 servo amplifiers with software version A9 or later.
2. Enabling the adaptive vibration suppression control of [Pr. 25] of a servo amplifier with software version A8 or earlier will cause [AL. 37 Parameter error].
Manually set [Pr. 18] Machine resonance suppression filter 1.

POINT

- The MR-J4-_B_-RJ020 servo amplifier with software version A9 or later is compatible with adaptive vibration suppression control. Set [Pr. 25] of the MR-J4-_B_-RJ020 servo amplifier with software version A8 or earlier, to "00 _ _" (Adaptive vibration suppression control disabled). When using adaptive vibration suppression control with the MR-J2S-_B_ servo amplifier, manually set [Pr. 18] Machine resonance suppression filter 1 using the machine analyzer function of MR Configurator.
- Setting [Pr. 25] to "1_ _ _", "_ 1 _ _", or "_ 2 _ _" for the MR-J4-_B_-RJ020 servo amplifier with software version A8 or earlier will cause [AL. 37 Parameter error].
- Setting [Pr. 25] to "1_ _ _" or "_ 2 _ _" for the MR-J4-_B_-RJ020 servo amplifier with software version A9 or later will cause [AL. 37 Parameter error].
- The fully closed loop system is enabled only in J2S compatibility mode.
- The fully closed loop system function can be used for servo amplifiers or drive units with the following software versions.
  - A4 or later for 7 kW or less
  - A6 or later for 11 kW or more
- In the fully closed loop system, the following cable can be used for the servo motor encoder:
  - Two-wire type for software version A4 or later
  - Two-wire and four-wire types for software version A6 or later

3. SYSTEM CONFIGURATION

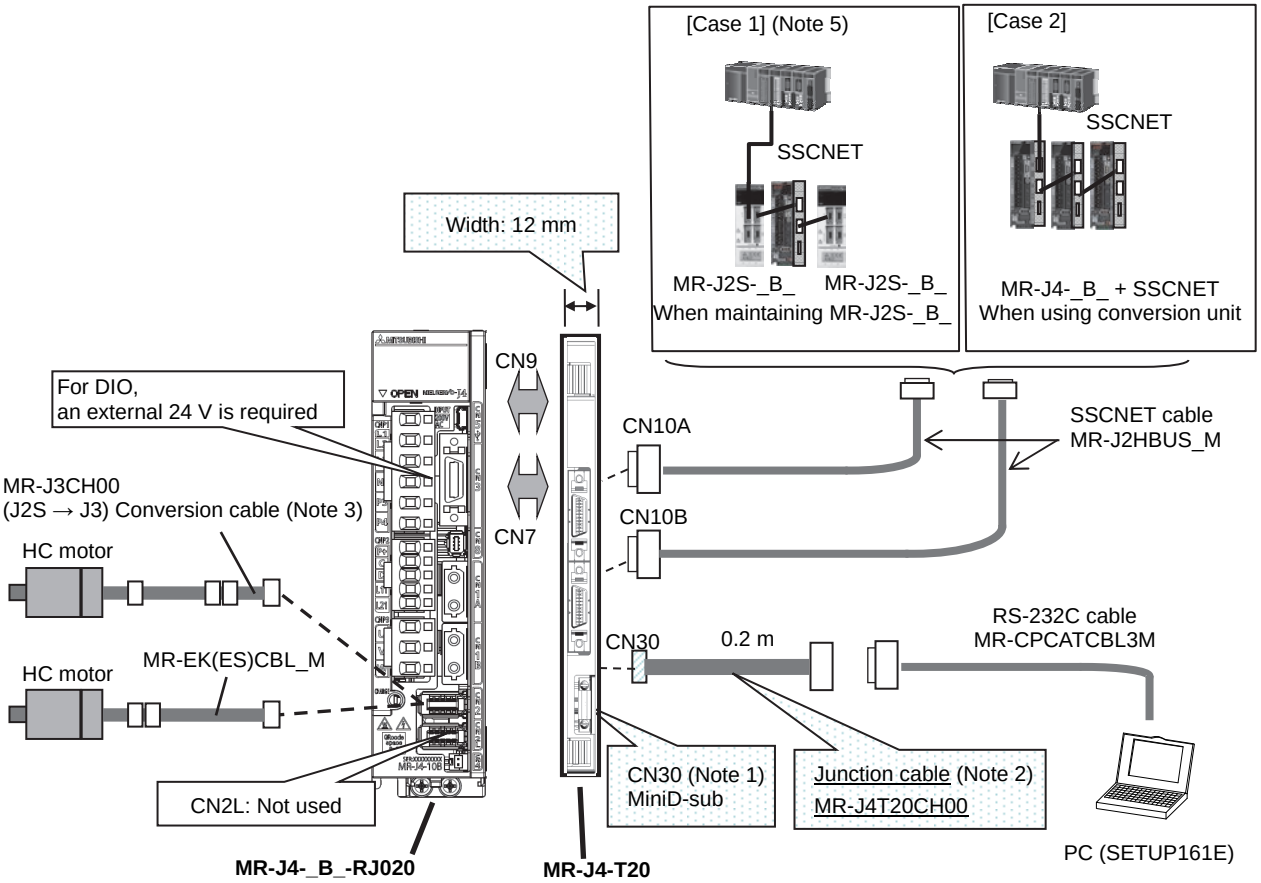

Note 1. While the SSCNET connector CN10A and CN10B use the same D-sub connector as MR-J2S-_B_, the RS-232C connector uses a mini D-sub connector. Therefore, the MR-J4T20CH00 junction cable is used to connect to a conventional cable (MR-CPCATCBL3M).

2. DIO (DI: one point; DO: one point; ABZ output; Monitor output) uses CN3 of MR-J4. RS-232C is connected using CN30 of MR-J4-T20.
3. Use MR-J3CH00 or SC-J2SJ4ENC03M (manufactured by Mitsubishi Electric System & Service Co., Ltd.).
4. The application "MR-J4(W)-B Change mode" through USB communication function of the servo amplifier is necessary for using the MR-J4-_B_-RJ020 in J4/J3 convertible mode.
   It is not necessary when using MR-J4-_B_-RJ020 in J2S compatible mode.
   The application "MR-J4(W)-B change mode" is available with MR Configurator2 Version 1.27D and later.
5. When a servo amplifier other than MR-J2S-_B_ series, MR-J2M-B series and MR-J2-03B5 is used with a controller, the MR-J4-_B_-RJ020 + MR-J4-T20 SSCNET conversion unit cannot be used.

POINT
●For large capacity of 30 kW or more, the position of PN terminal is different, so also change the converter unit when replacing MR-J2S-_B_.

4. I/O SIGNAL CONNECTION EXAMPLE

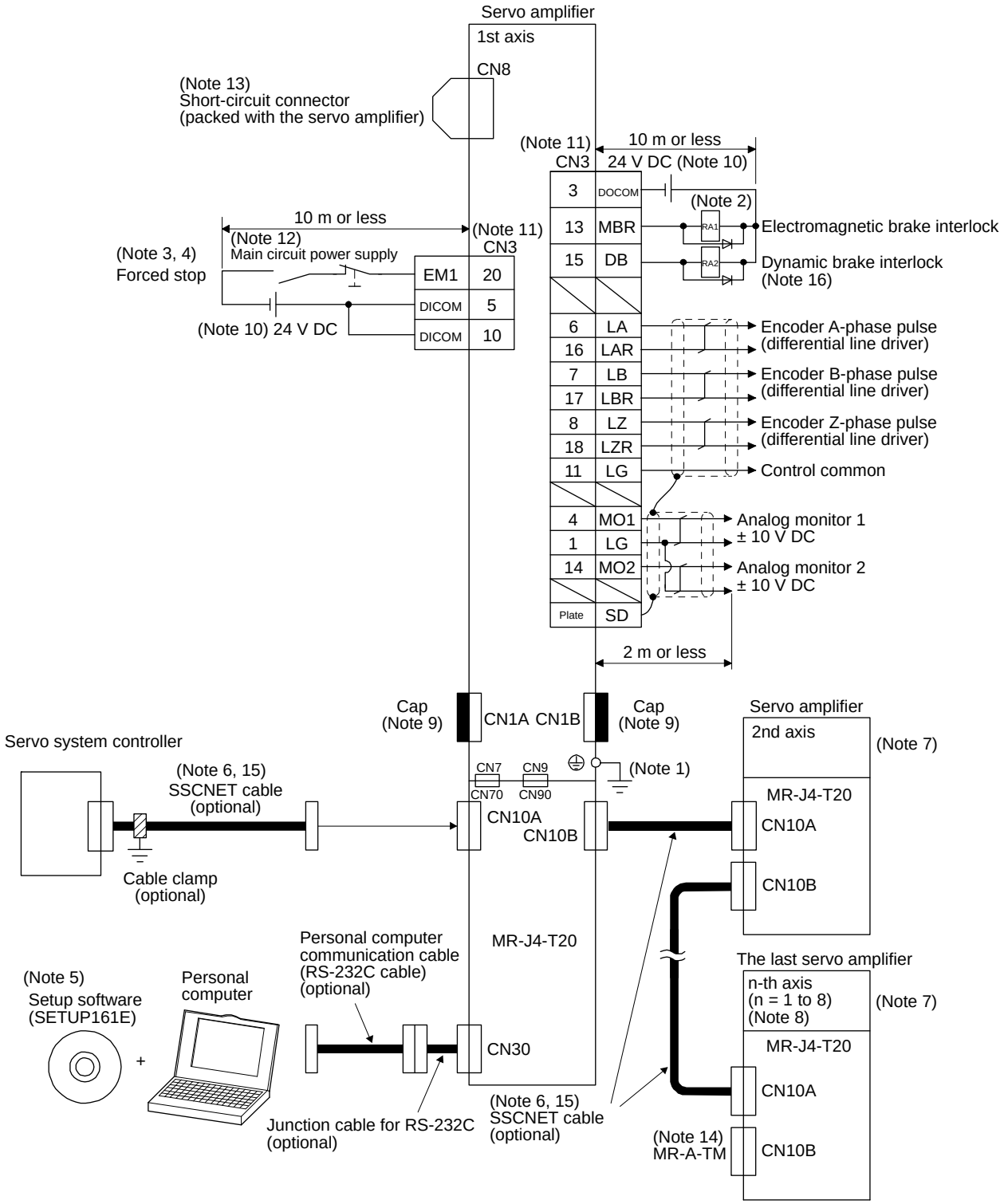

Note 1. To prevent electric shock, always connect the protective earth (PE) (⏚terminal (marked) of the servo amplifier to the protective earth (PE) of the cabinet.

2. Do not mistake the diode direction. If connected the other way round, the servo amplifier will malfunction and no signal will be output. Also, the protection circuits of EM1 (forced stop), etc., may not operate.
3. If the controller does not have the emergency stop function, make sure to install the forced stop switch (contact B).
4. At the time of operation, make sure to turn on EM1 (forced stop). (Normally closed contact)
5. Use the MRZJW3-SETUP161E.
6. The SSCNET cable varies according to the controller or servo amplifier that is connected in front and back. Use the following table as a guide for choosing the SSCNET cable. When a servo amplifier other than MR-J2S-_B_ series, MR-J2M-B series and MR-J2-03B5 is used with a controller, the MR-J4-_B_-RJ020 + MR-J4-T20 SSCNET conversion unit cannot be used.

		MR-J4-_B_-RJ020 + MR-J4-T20
QD75M		MR-J2HBUS_M
A1SD75M		MR-J2HBUS_M-A
Motion Controller	Q172CPU(N)	Q172J2BCBL_M(-B)
	Q173CPU(N)	Q173J2B_CBL_M
	A171SHCPU (N), A172SHCPU (N), A173UHCPU, A273UHCPU	MR-J2HBUS_M-A
MR-J2S-_B_/MR-J2-03B5 MR-J4-_B_-RJ020 + MR-J4-T20		MR-J2HBUS_M

7. The second and subsequent connections of servo amplifier are omitted.
8. Up to 8 axes (n= 1 to 8) can be connected.
9. The CN1 and the CN1B cannot be used in J2S compatible mode. Make sure to cap the CN1A and the CN1B connectors.
10. Supply 24 V DC ± 10% from an external power supply for the interface. Capacity of these power supplies should be100 mA in total. For convenience, the power supply of 24 V DC for input signals and output signals are stated separately, it can be configured by one.
11. A signal with the same name is connected inside the servo amplifier.
12. In order to prevent unexpected restarting of the servo amplifier, configure the circuit so that EM1 is also turned off when the main circuit power supply is turned off.
13. The STO functions cannot be used in J2S compatible mode. Make sure to install the short-circuit connector supplied with the servo amplifier.
14. Make sure to install the terminal connector (MR-A-TM) on the CN10B of the final servo amplifier.
15. Use the SSCNET cable with the total extension of 30 m or less. It is recommended to use cable clamps and data line filters (3 to 4 connected in series) near the connector pullout of the controller to enhance noise immunity.
16. When using the external dynamic brake with the servo amplifier of 11 kW or more, enable DB (Dynamic brake interlock) by setting [Pr.2] to "_1_ _".

5. PARAMETERS

POINT
●The servo amplifier is recognized as MR-J2S by the controller. However, for some parameters, changes to the program or the parameters are required as necessary.

The parameters shown in this chapter are a minimum number of parameters that need to be set for replacement. Depending on the settings of the currently used servo amplifier, parameters other than these may need to be set.
For details of the parameters, refer to the "Conversion Unit for SSCNET of MR-J2S-_B_ Compatible AC Servo MR-J4-_B_-RJ020/MR-J4-DU_B_-RJ020/MR-CR55K_/MR-J4-T20 SERVO AMPLIFIER INSTRUCTION MANUAL".

(1) When using adaptive vibration suppression control
Refer to "9.2 (8) Adaptive vibration suppression control function" in this section.

(2) Changing the load to motor inertia ratio
Refer to "9.2 (7) Changing the load to motor inertia ratio" in this section.

6. RS-232C COMMUNICATION CABLE

This section indicates the cable connecting the MR-J4-T20 and a personal computer through RS-232C communication. The RS-232C communication cable consists of the following two cables.

Cable model	Cable length	Product name
MR-J4T20CH00	0.2 m	Junction cable for RS-232C
MR-CPCATCBL3M	3 m	Personal computer communication cable (RS-232C cable)

(1) Connection of MR-J4-T20 to a personal computer

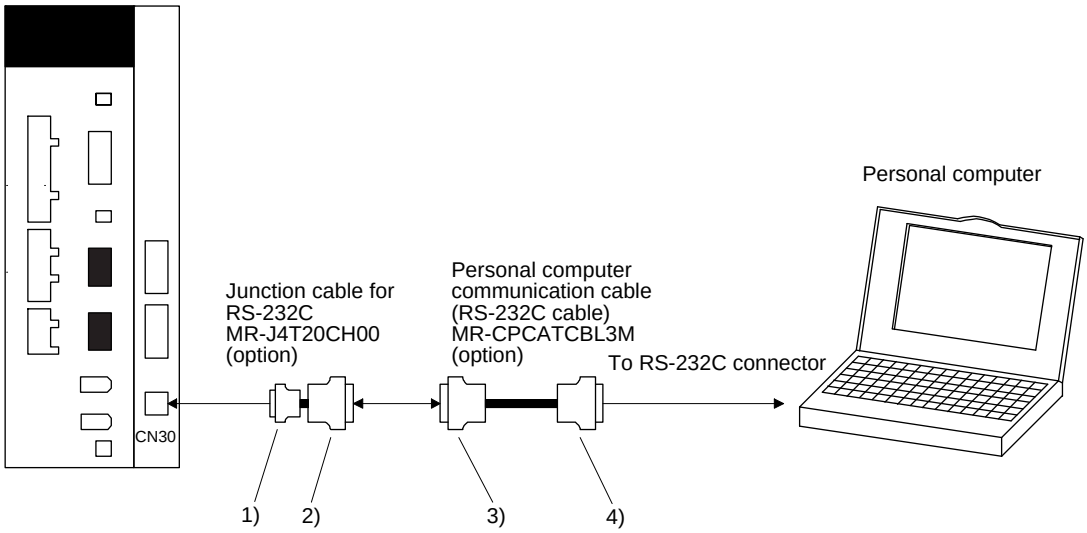

(2) MR-J4T20CH00

(a) Cable specifications

Cable model	1) MR-J4-T20 side connector	2) Junction connector
MR-J4T20CH00	Connector: HDR-E14MG1+ Connector case: HDR-E14LPA5 (Honda Tsushin Kogyo) 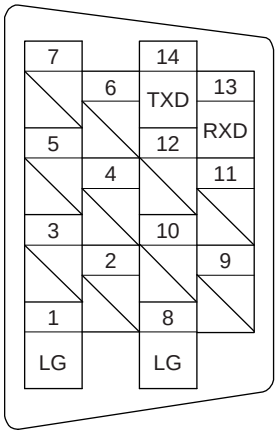 View seen from wiring side. (Note) Note. Do not connect anything to the pins shown as ▧.	Connector: 10220-0200EL Connector case: 10320-E2W0-008 (3M) 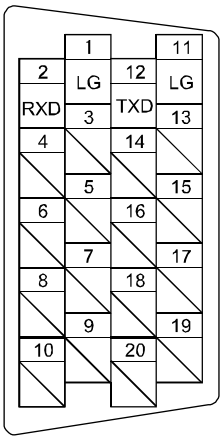 View seen from wiring side. (Note) Note. Do not connect anything to the pins shown as ▧.

7. LIST OF SERVO MOTOR COMBINATIONS AND SOFTWARE VERSIONS

(1) HC-_FS series/HA-_FS series

Servo motorseries name	Servo motor model	Servo amplifier model	Servo amplifier software version (Note)
HC-KFS series	HC-KFS053	MR-J4-10B-RJ020	A0 or later
		MR-J4-10B1-RJ020	A2 or later
	HC-KFS13	MR-J4-10B-RJ020	A0 or later
		MR-J4-10B1-RJ020	A2 or later
	HC-KFS23	MR-J4-20B-RJ020	A0 or later
		MR-J4-20B1-RJ020	A2 or later
	HC-KFS43	MR-J4-40B-RJ020	A0 or later
		MR-J4-40B1-RJ020	A2 or later
	HC-KFS73	MR-J4-70B-RJ020	A0 or later
HC-KFS high-speed rotation series	HC-KFS46	MR-J4-70B-RJ020	A0 or later
	HC-KFS410	MR-J4-70B-RJ020	A0 or later
HC-MFS series	HC-MFS053	MR-J4-10B-RJ020	A0 or later
		MR-J4-10B1-RJ020	A2 or later
	HC-MFS13	MR-J4-10B-RJ020	A0 or later
		MR-J4-10B1-RJ020	A2 or later
	HC-MFS23	MR-J4-20B-RJ020	A0 or later
		MR-J4-20B1-RJ020	A2 or later
	HC-MFS43	MR-J4-40B-RJ020	A0 or later
		MR-J4-40B1-RJ020	A2 or later
	HC-MFS73	MR-J4-70B-RJ020	A0 or later
HC-LFS series	HC-LFS52	MR-J4-60B-RJ020	A0 or later
	HC-LFS102	MR-J4-100B-RJ020	A0 or later
	HC-LFS152	MR-J4-200B-RJ020	A0 or later
	HC-LFS202	MR-J4-350B-RJ020	A0 or later
	HC-LFS302	MR-J4-500B-RJ020	A0 or later
HC-SFS 1000 r/min series	HC-SFS81	MR-J4-100B-RJ020	A0 or later
	HC-SFS121	MR-J4-200B-RJ020	A0 or later
	HC-SFS201	MR-J4-200B-RJ020	A0 or later
	HC-SFS301	MR-J4-350B-RJ020	A0 or later
HC-SFS 2000r/min series	HC-SFS52	MR-J4-60B-RJ020	A0 or later
	HC-SFS102	MR-J4-100B-RJ020	A0 or later
	HC-SFS152	MR-J4-200B-RJ020	A0 or later
	HC-SFS202	MR-J4-200B-RJ020	A0 or later
	HC-SFS352	MR-J4-350B-RJ020	A0 or later
	HC-SFS502	MR-J4-500B-RJ020	A0 or later
	HC-SFS702	MR-J4-700B-RJ020	A0 or later
	HC-SFS524	MR-J4-60B4-RJ020	A0 or later
	HC-SFS1024	MR-J4-100B4-RJ020	A0 or later
	HC-SFS1524	MR-J4-200B4-RJ020	A0 or later
	HC-SFS2024	MR-J4-200B4-RJ020	A0 or later
	HC-SFS3524	MR-J4-350B4-RJ020	A0 or later
	HC-SFS5024	MR-J4-500B4-RJ020	A0 or later
	HC-SFS7024	MR-J4-700B4-RJ020	A0 or later
HC-SFS 3000 r/min series	HC-SFS53	MR-J4-60B-RJ020	A0 or later
	HC-SFS103	MR-J4-100B-RJ020	A0 or later
	HC-SFS153	MR-J4-200B-RJ020	A0 or later
	HC-SFS203	MR-J4-200B-RJ020	A0 or later
	HC-SFS353	MR-J4-350B-RJ020	A0 or later
HC-RFS series	HC-RFS103	MR-J4-200B-RJ020	A0 or later
	HC-RFS153	MR-J4-200B-RJ020	A0 or later
	HC-RFS203	MR-J4-350B-RJ020	A0 or later
	HC-RFS353	MR-J4-500B-RJ020	A1 or later
	HC-RFS503	MR-J4-500B-RJ020	A0 or later

Note. These servo motors support J4 mode/J2S compatibility mode. J3 compatibility mode is not supported.

Servo motor series name	Servo motor model	Servo amplifier model	Servo amplifier software version (Note)
HA-LFS 1000 r/min series	HA-LFS601	MR-J4-700B-RJ020	B2 or later
	HA-LFS801	MR-J4-11KB-RJ020	Not compatible
	HA-LFS12K1	MR-J4-11KB-RJ020	Not compatible
	HA-LFS15K1	MR-J4-15KB-RJ020	Not compatible
	HA-LFS20K1	MR-J4-22KB-RJ020	Not compatible
	HA-LFS25K1	MR-J4-22KB-RJ020	Not compatible
	HA-LFS6014	MR-J4-700B4-RJ020	Not compatible
	HA-LFS8014	MR-J4-11KB4-RJ020	B0 or later
	HA-LFS12K14	MR-J4-11KB4-RJ020	Not compatible
	HA-LFS15K14	MR-J4-15KB4-RJ020	Not compatible
	HA-LFS20K14	MR-J4-22KB4-RJ020	Not compatible
HA-LFS 1500 r/min series	HA-LFS701M	MR-J4-700B-RJ020	Not compatible
	HA-LFS11K1M	MR-J4-11KB-RJ020	A9 or later
	HA-LFS15K1M	MR-J4-15KB-RJ020	Not compatible
	HA-LFS22K1M	MR-J4-22KB-RJ020	Not compatible
	HA-LFS701M4	MR-J4-700B4-RJ020	Not compatible
	HA-LFS11K1M4	MR-J4-11KB4-RJ020	B3 or later
	HA-LFS15K1M4	MR-J4-15KB4-RJ020	B2 or later
	HA-LFS22K1M4	MR-J4-22KB4-RJ020	B2 or later
HA-LFS 2000 r/min series	HA-LFS502	MR-J4-500B-RJ020	A0 or later
	HA-LFS702	MR-J4-700B-RJ020	A0 or later
	HA-LFS11K2	MR-J4-11KB-RJ020	A1 or later
	HA-LFS15K2	MR-J4-15KB-RJ020	A1 or later
	HA-LFS22K2	MR-J4-22KB-RJ020	A1 or later
	HA-LFS11K24	MR-J4-11KB4-RJ020	A5 or later
	HA-LFS15K24	MR-J4-15KB4-RJ020	A5 or later
	HA-LFS22K24	MR-J4-22KB4-RJ020	A5 or later
HC-UFS 2000 r/min series	HC-UFS72	MR-J4-70B-RJ020	A1 or later
	HC-UFS152	MR-J4-200B-RJ020	A1 or later
	HC-UFS202	MR-J4-350B-RJ020	A1 or later
	HC-UFS352	MR-J4-500B-RJ020	A1 or later
	HC-UFS502	MR-J4-500B-RJ020	A1 or later
HC-UFS 3000 r/min series	HC-UFS13	MR-J4-10B-RJ020	A0 or later
	HC-UFS23	MR-J4-20B-RJ020	A0 or later
	HC-UFS43	MR-J4-40B-RJ020	A0 or later
	HC-UFS73	MR-J4-70B-RJ020	A0 or later

Note. These servo motors support J4 mode/J2S compatibility mode. J3 compatibility mode is not supported.

Servo motor series name	Servo motor model	Converter unit model	Servo amplifier model	Servo amplifier software version (Note)
HA-LFS 1000 r/min series	HA-LFS30K1	MR-CR55K	MR-J4-DU30KB-RJ020	Not compatible
	HA-LFS37K1		MR-J4-DU37KB-RJ020	Not compatible
	HA-LFS25K14	MR-CR55K4	MR-J4-DU30KB4-RJ020	Not compatible
	HA-LFS30K14		MR-J4-DU30KB4-RJ020	Not compatible
	HA-LFS37K14		MR-J4-DU37KB4-RJ020	Not compatible
HA-LFS 1500 r/min series	HA-LFS30K1M	MR-CR55K	MR-J4-DU30KB-RJ020	Not compatible
	HA-LFS37K1M		MR-J4-DU37KB-RJ020	Not compatible
	HA-LFS30K1M4	MR-CR55K4	MR-J4-DU30KB4-RJ020	B0 or later
	HA-LFS37K1M4		MR-J4-DU37KB4-RJ020	Not compatible
	HA-LFS45K1M4		MR-J4-DU45KB4-RJ020	A4 or later
	HA-LFS50K1M4		MR-J4-DU55KB4-RJ020	Not compatible
HA-LFS 2000 r/min series	HA-LFS30K2	MR-CR55K	MR-J4-DU30KB-RJ020	A4 or later
	HA-LFS37K2		MR-J4-DU37KB-RJ020	A4 or later
	HA-LFS30K24	MR-CR55K4	MR-J4-DU30KB4-RJ020	A4 or later
	HA-LFS37K24		MR-J4-DU37KB4-RJ020	A4 or later
	HA-LFS45K24		MR-J4-DU45KB4-RJ020	A4 or later
	HA-LFS55K24		MR-J4-DU55KB4-RJ020	A4 or later

Note. These servo motors support J4 mode/J2S compatibility mode. J3 compatibility mode is not supported.

(2) List of servo motor combinations and S/W versions for HC-_F series servo motor

POINT

●Servo motors of this series can be driven only in the "J2S compatibility mode". When the "MR-J4-T20" unit is removed and servo amplifiers are used in the "J4 mode", servo motors of this series need to be replaced.

Servo motor series name	Servo motor model	Servo amplifier model	Optional unit model	Servo amplifier software version (Note)
HC-MF 3000 r/min series	HC-MF053	MR-J4-10B-RJ020	MR-J4-T20	A6 or later
	HC-MF13			A6 or later
	HC-MF23	MR-J4-20B-RJ020		A6 or later
	HC-MF43	MR-J4-40B-RJ020		A6 or later
	HC-MF73	MR-J4-70B-RJ020		A6 or later
HC-SF 1000 r/min series	HC-SF81	MR-J4-100B-RJ020		A6 or later
	HC-SF121	MR-J4-200B-RJ020		A6 or later
	HC-SF201			A6 or later
	HC-SF301	MR-J4-350B-RJ020		A6 or later
HC-SF 2000 r/min series	HC-SF52	MR-J4-60B-RJ020		A6 or later
	HC-SF102	MR-J4-100B-RJ020		A6 or later
	HC-SF152	MR-J4-200B-RJ020		A6 or later
	HC-SF202			A6 or later
	HC-SF352	MR-J4-350B-RJ020		A6 or later
HC-SF 3000 r/min series	HC-SF53	MR-J4-60B-RJ020		A6 or later
	HC-SF103	MR-J4-100B-RJ020		A6 or later
	HC-SF153	MR-J4-200B-RJ020		A6 or later
	HC-SF203			A6 or later
	HC-SF353	MR-J4-350B-RJ020		A6 or later
HA-FF series		Not compatible		
HC-RF series				
HC-UF 2000 r/min series				
HC-UF 3000 r/min series				

Note. When a servo amplifier other than MR-J2S-_B_ series, MR-J2M-B series, or MR-J2-03B5 is used with a controller, the MR-J4-_B_-RJ020 + MR-J4-T20 SSCNET conversion unit cannot be used.

8. LIST OF COMBINATIONS AND SOFTWARE VERSIONS FOR SERVO SYSTEM CONTROLLERS

The table 8.1 lists servo system controllers that can be used in combination with MR-J4-_B_-RJ020 + MR-J4-T20.

Table 8.1 List of applicable servo system controllers

<table>
<tr><th>Model</th><th>Servo system controller model</th><th>Compatible network</th><th>Servo amplifier software version</th></tr>
<tr><td rowspan="6">Motion controller</td><td>Q172CPU(N)(-T)</td><td rowspan="12">SSCNET</td><td rowspan="2">A0 or later (Note 3)</td></tr>
<tr><td>Q173CPU(N)(-T)</td></tr>
<tr><td>A171SHCPU(N) (Note 1)</td><td rowspan="5">A0 or later</td></tr>
<tr><td>A172SHCPU(N) (Note 1)</td></tr>
<tr><td>A173UHCPU(-S1) (Note 1)</td></tr>
<tr><td>A273UHCPU(-S3) (Note 1)</td></tr>
<tr><td rowspan="5">Positioning module</td><td>QD75M</td></tr>
<tr><td>A1SD75M (Note 2)</td></tr>
<tr><td>AD75M (Note 2)</td><td>A2 or later</td></tr>
<tr><td>AD778M/AD774M</td><td rowspan="2">Not compatible</td></tr>
<tr><td>A1SD778M/A1SD774M</td></tr>
<tr><td rowspan="3">Position board</td><td></td></tr>
<tr><td>MR-MC10</td><td rowspan="4">SSCNET II</td><td rowspan="3">A2 or later</td></tr>
<tr><td>MR-MC30</td></tr>
<tr><td rowspan="2">Interface board</td><td>MR-MCF30</td></tr>
<tr><td>MR-MCF10</td><td>A6 or later</td></tr>
</table>

Note 1. For versions of the OS that supports MR-J4-_B_-RJ020, refer to table 8.2.
2. [Pr. 100 servo series] of the controller has no setting value corresponding to the MR-J2S-B or the selection of "MR-J2S-_B_" is Not compatible in the GX Configurator-AP screen. Set "MR-J2-_B_" for [Pr. 100 servo series].
3. SV54 is compatible with the servo amplifier's software version A2 or later.

Table 8.2 Versions of motion controller OS that support MR-J4-_B_-RJ020

Controller model	OS model	OS version
Q172CPU(N)(-T)	SW6RN-SV13QD	First edition or later
	SW6RN-SV22QC	
	SW5RN-SV43QC	
	SW5RN-SV54QD	
Q173CPU(N)(-T)	SW6RN-SV13QB	
	SW6RN-SV22QA	
	SW5RN-SV43QA	
	SW5RN-SV54QB	
A171SHCPU(N)	SW0SRX-SV13G	AF or later
	SW0SRX-SV22F	
	SW0SRX-SV43F	T or later
A172SHCPU(N)	SW3RN-SV13D	G or later
	SW3RN-SV22C	
	SW0SRX-SV13D	AF or later
	SW0SRX-SV22C	
	SW0SRX-SV43C	T or later
A173UHCPU(-S1)	SW3RN-SV13B	G or later
	SW3RN-SV22A	
	SW2SRX-SV13B	AF or later
	SW2SRX-SV22A	
	SW2SRX-SV43A	T or later
A273UHCPU	SW2SRX-SV13V	AF or later
	SW2SRX-SV22U	
	SW2SRX-SV43U	T or later
A273UHCPU-S3	SW3RN-SV13X	G or later
	SW3RN-SV22W	

Table 8.3 Peripheral software versions of motion controllers that support MR-J4-B-RJ020

Peripheral software model		Peripheral software version
Windows edition	SW6RNC-GSV	First edition or later
	SW3RNC-GSV	G or later
DOS edition	SW2SRX-GSV13P	AD or later
	SW2SRX-GSV22P	
	SW2SRX-GSV43P	T or later

9. SAFETY PRECAUTIONS

9.1 Replacing MR-J2S-_B_ Servo Amplifier with MR-J4-_B_-RJ020 Servo Amplifier

Note the following when replacing the MR-J2S-_B_ servo amplifier with the MR-J4-_B_-RJ020 servo amplifier.

(1) The capacity of mounting holes differs. For compatibility of mounting holes, refer to "[Appendix 1] 11.1 Comparison of Dimensions".

(2) The dimensions of the MR-J4-_B_-RJ020 servo amplifier combined with MR-J4-T20 may be larger than the MR-J2S-_B_ servo amplifier. Refer to "[Appendix 1] 11.1 Comparison of Dimensions".

(3) The wire size may differ from that of the MR-J2S-_B_ servo amplifier. Refer to "Part 9: Review on Replacement of Optional Peripheral Equipment 4. Wire Size".

(4) If the HG series servo motor is used in J2S compatible mode, the encoder resolution per rotation of the servo motor is not 4194304 pulses/rev (22 bit) but becomes 131072 pulses/rev (17 bit).

(5) When using the HG series servo motor at the maximum torque, set the torque limit to 500% on the servo system controller. When setting the maximum torque in test operation mode, change the setting of [Pr. 10 Forward rotation torque limit] and [Pr. 10 Reverse torque limit] to 500 %.

(6) Operation without motor through the setup software (SETUP161E) cannot be used. When operating motor, set [Pr. 24] to "_ 1 _ _".

(7) When using [Pr. 13 Position control gain 1] of the MR-J4-_B_-RJ020 servo amplifier and the MR-J2S-_B_ servo amplifier together in interpolation mode, etc., check the droop pulses of each shaft and readjust the gain as necessary.

(8) The MR-J4-_B_-RJ020 servo amplifier with software version A9 or later is compatible with adaptive vibration suppression control. Set [Pr. 25] of the MR-J4-_B_-RJ020 servo amplifier with software version A8 or earlier, to "00 _ _" (Adaptive vibration suppression control disabled). When using adaptive vibration suppression control with the MR-J2S-_B_ servo amplifier, manually set [Pr. 18] Machine resonance suppression filter 1 using the machine analyzer function of MR Configurator.
Setting [Pr. 25] to "1_ _ _", "_ 1 _ _", or "_ 2 _ _" for the MR-J4-_B_-RJ020 servo amplifier with software version A8 or earlier will cause [AL. 37 Parameter error].
Setting [Pr. 25] to "1_ _ _" or "_ 2 _ _" for the MR-J4-_B_-RJ020 servo amplifier with software version A9 or later will cause [AL. 37 Parameter error].

(9) The connector for SSCNET cable connection cannot supply power to the encoder. When using with the absolute position sensor detection system, make sure to connect the battery to the CN4 connector of the MR-J4-_B_-RJ020 servo amplifier.

(10) In this [Appendix 1], it only describes the encoder cable and the regenerative option for connecting the HC-_FS series and the HA-_FS series servo motors to the MR-J4-_B_-RJ020 servo amplifier. For details of the options for the servo amplifier, refer to Chapter 11 of the "MR-J4-_B_-RJ020 MR-J4-T20 Servo Amplifier Instruction Manual". For options for the HC-_FS series and the HA-_FS series servo motors, refer to "MR-J2S-_B Servo Amplifier Instruction Manual (SH(NA)030007)" and "MELSERVO Servo Motor Instruction Manual (SH(NA)3181)".

POINT

- When using servo motors of the HA_FS and the HC_FS series together, "regeneration option" and "external dynamic brake unit" can be used with the products used in MR-J2S-_B_.
  To change to the HG series servo motor, change "regeneration option" and "external dynamic brake unit" after referring to the instruction manual for MR-J4-_B_.
- For 1-phase 200 V AC to 240 V AC, connect the power supply to L1 and L3. The connection destination is different from that of the MR-J2S series servo amplifier. When replacing the MR-J2S with the MR-J4, make sure that the connection destination is correct.
- When using (HA-LFS series) servo motors that have thermal terminals and not connecting thermal signals to the MR-J4 servo amplifier, set [Pr. 58] to "_ _ _ 1h (Disabled)".
  The overheat protection of a servo motor is not enabled. Configure a protective circuit.

⚠ Note

●The initializing time (the time taken from power-on to reception of servo-on) after power-on of the MR-J2S-_B_ servo amplifier and MR-J4-_B_-RJ020 servo amplifier becomes as follows.

• MR-J2S-_B_: (up to 3 s)

• MR-J4-_B_-RJ020: (up to 4 s)

Therefore, note the following when replacing the MR-J2S-_B_ servo amplifier with the MR-J4-_B_-RJ020 servo amplifier.

• When using the electromagnetic brake to prevent a drop in a vertical lift application or the like with an external timer to adjust the brake release time, the lift may drop due to a longer servo-lock time. Adjust the brake release time as necessary or use MBR (electromagnetic brake interlock).

• The time taken from power-on to operation of the servo motor may become longer.

●The signal arrays of the connectors for CN3 differ between the MR-J4-_B_-RJ020 and the MR-J2S-_B_. Refer to the table below.

CN3 connector Pin number	Abbreviation		Note when replacing from the MR-J2S-_B_
	MR-J2S-_B_	MR-J4-_B_-RJ020	
2	RXD		For manufacturer setting. Do not connect anything to these. Connect the RXD to the CN30 connector (13 pin) of the MR-J4-T20.
3	SG	DOCOM	An external 24 V DC power supply is required for the interface. Change the wiring as necessary.
5	COM	DICOM	
10	VDD	DICOM	
12	TXD		For manufacturer setting. Do not connect anything to these. Connect the TXD to the CN30 connector (14 pin) of the MR-J4-T20.

●The electronic dynamic brake operates in the initial state for the HG series servo motors with a 600 W or smaller capacity. The time constant "τ" for the electronic dynamic brake will be shorter than that for normal dynamic brake. Therefore, coasting distance will be shorter than in normal dynamic brake. To set the electronic dynamic brake, refer to [Pr. 39] and [Pr. 56].

POINT

●When the power is turned on, voltage, analog monitor output voltage and output signal may become unstable.

9.2 Differences with the MR-J2S Series

(1) Differences with the MR-J2S Series

Item		MR-J2S series	MR-J4-_B_-RJ020 + MR-J4-T20 series
1	Dynamic brake	Built-in (0.1 kW to 7 kW) External (11 kW to 55 kW)	Built-in (0.1 kW to 7 kW) External (11 kW to 55 kW) **Coasting distance is different.**
2	Control circuit power	(100 V class) 1-phase 100 V AC to 120 V AC (200 V class) 1-phase 200 V AC to 230 V AC (400 V class) 24 V DC (up to 7 kW) 1-phase 380 V AC to 480 V AC (11 kW to 55 kW)	(100 V class) 1-phase 100 V AC to 120 V AC (200 V class) 1-phase 200 V AC to **240 V AC** (400 V class) 1-phase 380 V AC to 480 V AC
3	Main circuit power	(100 V class) 1-phase 100 V AC to 120 V AC (200 V class) 1-phase 230 V 3-phase 200 V AC to 230 V AC (up to 750 W) 3-phase 200 V AC to 230 V AC (1 kW to 37 kW) (400 V class) 3-phase 380 V AC to 480 V AC	(100 V class) 1-phase 100 V AC to 120 V AC (200 V class) 1-phase/3-phase 200 V AC to **240 V AC** (to 750 W) 3-phase 200 V AC to **240 V AC** (1 kW to 37 kW) (400 V class) 3-phase 380 V AC to 480 V AC
4	24 V DC power	Built-in	**External supply required**
5	Auto Tuning	Real-time auto tuning: 15 steps	Real-time auto tuning: **40 steps** **One-touch tuning**
6	Control mode	SSCNET interface • Position control mode • Speed control mode	SSCNET III/H interface • Position control mode • Speed control mode • **Torque control mode**
7	The number of DIO points (excluding EM1)	SSCNET interface DI: 0 points; DO:2 points	SSCNETⅢ/H interface **DI: 3 points; DO: 3 points**
8	DIO interface	Input: Sink/source Output: Sink	Input: Sink/source Output: Sink/**source**
9	Analog input/output	SSCNET interface (Output) 10-bit or equivalent × 2 ch	SSCNETⅢ/H interface (Output) 10-bit or equivalent × 2 ch
10	Parameter setting method	Setup software (SETUP161E)	Setup software (SETUP161E)
11	Setup software communication function	RS-232C	RS-232C (CN30 connector)
12	Servo motor (Encoder resolution)	HC-_FS series (17-bit ABS) HA-_FS series (17-bit ABS)	HG series (**17-bit** ABS)
13	Motor maximum torque	HC-KFS 300%	HG-KR **350%** (gear reducer: 300%)
		HC-MFS 300%	HG-MR 300%
		HC-SFS 300%	HG-SR 300%
		HA-LFS 250%,300%	HG-JR **300%**
		HC-RFS 250%	HG-RR 250%
		HC-UFS 300%	HG-UR 300%
14	LED display	(MR-J2S-_B_) 7-segment 2-digit	(MR-J4-_B_) 7-segment **3-digit**
15	Notch filter	Specified	Specified
16	Tough drive	Unprovided	Unprovided
17	Drive recorder	Unprovided	Unprovided
18	Forced stop	EM1 (DB stop)	Select EM1 (DB stop)/**EM2 (deceleration to a stop)**
Note	Functions with difference are **shown with shading**.		

(2) Startup in the absolute position detection system

[AL. 25 Absolute position erased] occurs when switching the power on for the first time, but that is not a malfunction. When an alarm occurs, the alarm can be canceled by shutting off the power after leaving the power on for a few minutes with the alarm being issued. If power is switched on with the servo motor operated at the speed of 500 r/min or higher, position mismatch may occur due to external force. Power must therefore be switched on when the servo motor is stopped.

POINT

●There are two kinds of batteries to use when configuring absolute position detection system: one is the MR-BAT6V1SET battery and the other is the MR-BAT6V1BJ battery for battery extension cable. When using the MR-BAT6V1BJ battery for battery extension cable, it has the following features compared to the MR-BAT6V1SET battery.

• The encoder cable can be removed from the servo amplifier.

• The battery can be replaced with the control circuit power supply turned off.

●When the encoder loses the absolute position data, make sure to operate after setting the home position. The encoder loses the absolute position data in the following cases. It may also lose the absolute position data when the battery is used outside the specified range.

When the MR-BAT6V1SET battery is used

• Removed the encoder cable.

• Replaced the battery with the control circuit power switched off.

When the battery for the MR-BAT6V1BJ battery extension cable is used

• Removed the connector and the cable between the servo motor and the battery.

●The battery for the MR-BAT6V1BJ battery extension cable only supports the HG series servo motor.

●The connector for the SSCNET cable connection cannot supply power to the encoder. When using with the absolute position sensor detection system, make sure to connect the battery to the CN4 connector of the servo amplifier.

(3) MR-BAT6V1SET battery specifications

Refer to the following table for items that differ from when using an HG series servo motor.

Item	Description
Maximum speed at power failure [r/min]	500
Battery backup time	Approximately 10,000 h (equipment power supply: off; ambient temperature: 20 ˚C)

(4) Confirmation of absolute position detection

POINT
●When using the setup software (SETUP161E) with the MR-J4-_B_-RJ020 servo amplifier, select "Setup" - "System settings" and set the "Model selection" to "MR-J2S-_B_".

The absolute position data can be confirmed from the setup software (SETUP161E).
Select "Diagnosis" - "Display ABS data" and open the absolute position data display screen.

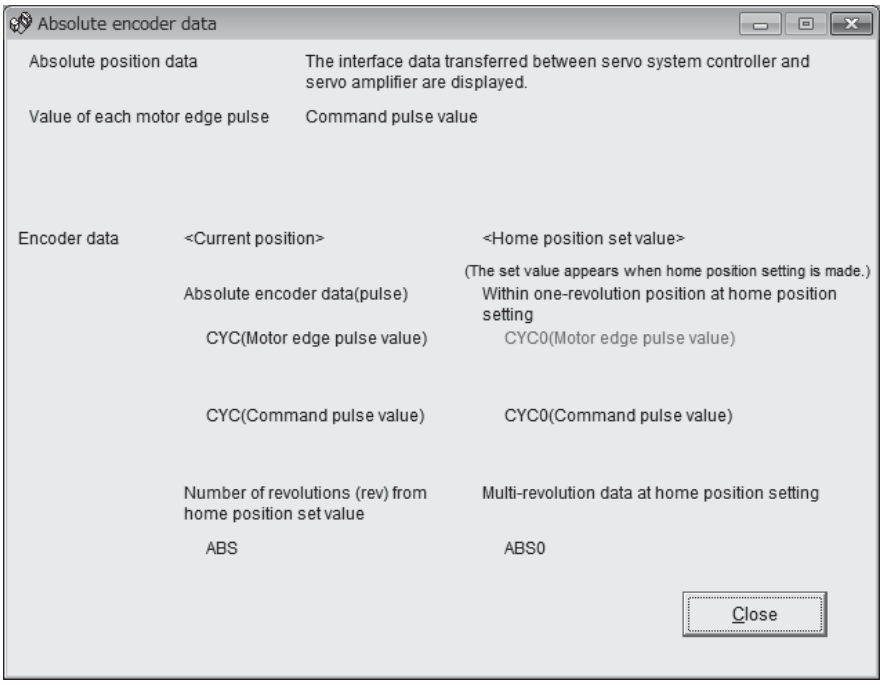

(5) Connection of battery
Connect the battery as shown in the following diagram.

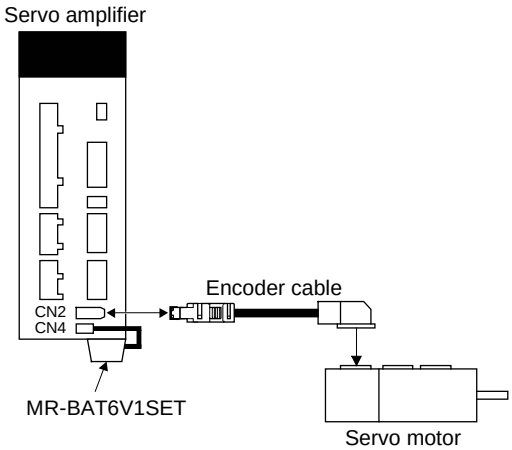

(6) Gain adjustment
When using [Pr. 13 Position control gain 1] of the MR-J4-_B_-RJ020 servo amplifier and the MR-J2S-_B_ servo amplifier together in interpolation mode, etc., check the accumulated pulses of each axis and readjust the gain as necessary.

(7) Changing the load to motor inertia ratio

POINT

- The software version A6 or later supports the "load to motor inertia ratio" function.
- When the "load to motor inertia ratio" function is enabled, always check the setting value of [Pr. 35].
  If a proper value has not been set in [Pr. 35], the servo motor may operate unexpectedly.

When the moment of inertia of a servo motor is changed due to replacement of the MR-J2S series servo motor (HC-_FS/HA-_FS series) with the MR-J4 series servo motor (HG series), the load to motor inertia ratio needs to be changed to a proper value.
Change the load to motor inertia ratio with one of the following methods 1) and 2). Check that operation can be performed normally after the setting with one of the methods. If a problem such as vibration occurs, manually set the load to motor inertia ratio 3).

1) Setting by auto tuning
After replacing servo motors, perform auto tuning in the mode in which the load to motor inertia ratio is estimated by setting [Pr. 8 Auto tuning]. For details, refer to Section 6.2 "Auto tuning" of "Conversion Unit for SSCNET of MR-J2S-B Compatible AC Servo MR-J4-_B_-RJ020/MR-J4-DU_B_-RJ020/MR-CR55K_/MR-J4-T20 SERVO AMPLIFIER INSTRUCTION MANUAL". When using the gain switching function, change [Pr. 52 Load to motor inertia ratio 2] as necessary.

2) Setting with the parameter for the load to motor inertia ratio (software version A6 or later)
When auto tuning is not performed or only the load to motor inertia ratio is changed, the load to motor inertia ratio can be changed by setting the parameter for the load to motor inertia ratio. To set the load to motor inertia ratio, set "_ _ _1" in [Pr. 59 Option function B] and set the ratio calculated by dividing the moment of inertia of the servo motor before replacement by the moment of inertia of the servo motor after replacement in [Pr. 35 Load to motor inertia ratio] in percentage.

Example) When a HC-KFS053 motor is replaced with a HG-KR053 motor, set "_ _ _1" in [Pr. 59 Option function B] and 118 in [Pr. 35 Load to motor inertia ratio].

$$\begin{aligned} \text{Pr.35} &= \frac{\text{Moment of inertia before replacement}}{\text{Moment of inertia after replacement}} \times 100[\%] \\ &= \frac{\text{Moment of inertia for HC-KFS053}}{\text{Moment of inertia for HG-KR053}} \times 100 \\ &= \frac{0.053 \times 10^{-4}}{0.0450 \times 10^{-4}} \times 100 = 118 \end{aligned}$$

* The load to motor inertia ratio function is enabled when the value of [Pr. 8 Auto tuning] is 2, 3, or 4. The load to motor inertia ratio function is disabled when the value of [Pr. 8 Auto tuning] is 0 or 1. In this case, the ratio is not applied.
* For the moment of inertia of a servo motor, refer to the instruction manual of the servo motor used or Section 2.5 "Comparison of Moment of Inertia" in Part 8.
* The load to motor inertia ratio function changes the internal value of the load to motor inertia ratio using the ratio calculated by dividing the moment of inertia of the servo motor before replacement by the moment of inertia of the servo motor after replacement. The characteristics of the servo motor after replacement may not be the same as those of the servo motor before replacement only by changing the load to motor inertia ratio. If a problem occurs, manually set the load to motor inertia ratio 3).
* This function is not supported by geared servo motor.
* After GD2 ([Pr. 12]) is estimated by auto tuning, disable the load to motor inertia ratio function by setting [Pr. 59 Option function B] to "_ _ _0" and [Pr. 35 Load to motor inertia ratio] to 0.

No.	Symbol	Name and function	Initial value [Unit]	Setting range
35	TTT	Load to motor inertia ratio (load inertia ratio) Set the percentage of the load to the motor inertia ratio to the servo motor inertia moment (load inertia ratio). This setting can be enabled or disabled with [Pr. 59] (OPB). Setting [Pr. 59] (OPB) to "_ _ _1" enables this setting. When [Pr. 35] is "0 [%]", the parameter for the load to motor inertia ratio is not enabled regardless of the setting of [Pr. 59].	0 [%]	0 to 65535
59	*OPB	Option function B: Select a setting of the load to motor inertia ratio (load inertia ratio). Ratio selection for the load to motor inertia ratio (load inertia ratio) 0: Disabled The ratio setting of [Pr. 35] (TTT) is disabled. 1: Enabled The ratio setting of [Pr. 35] (TTT) is enabled. * Before enabling this function, check the setting value of [Pr. 35]. If a proper value has not been set in [Pr. 35], the motor may operate unexpectedly.	0000	0000h to 1111h

3) Manual setting

If a problem occurs with the above 1) or 2), disable the load to motor inertia ratio function and manually adjust the gain value. For how to manually adjust the gain value, refer to section 6.3 "Manual mode 1" of "Conversion Unit for SSCNET of MR-J2S-B Compatible AC Servo MR-J4-_B_-RJ020/MR-J4-DU_B_-RJ020/MR-CR55K_/MR-J4-T20 SERVO AMPLIFIER INSTRUCTION MANUAL".

(8) Adaptive vibration suppression control function

POINT

- The adaptive vibration suppression control function is supported by servo amplifier with software version A9 or later. (Enabling the adaptive vibration suppression control of [Pr. 25] of a servo amplifiers with software version A8 or earlier will cause [AL. 37 Parameter error].)
  For the items not described in this Replacement Manual, refer to "MELSERVO-J4 series MR-J4-_B_-RJ020 Servo Amplifier Instruction Manual".
- The characteristics of the adaptive vibration suppression control differ from those for MR-J2S-_B_.
- When this function is used, [Pr. 61] "Machine resonance suppression filter 2" cannot be used.

Adaptive vibration suppression control is a function in which the servo amplifier detects mechanical resonance and sets filter characteristics automatically to suppress mechanical vibration.
Adaptive filter II (adaptive tuning) which is equivalent to that of MR-J4-_B_ is available for MR-J4-_B_-RJ020 as the adaptive vibration suppression control function.

(a) Configuration of adaptive vibration suppression control function
Adaptive vibration suppression control consists of the following two functions.

- Adaptive filter II
- Vibration tough drive

At the initial setting, the adaptive filter II operates automatically and the machine resonance suppression filter is automatically estimated. After that, the vibration tough drive function measures the machine resonance variation and resets the setting value of the machine resonance suppression filter.
When the machine vibration does not stop after the vibration tough drive function resets the filter, readjust the setting with the adaptive filter II.

(b) Adaptive filter II

POINT

- The machine resonance frequency which adaptive filter II (adaptive tuning) can respond to is about 100 Hz to 2.25 kHz. As for the resonance frequency out of the range, set manually.
- When adaptive tuning is executed, vibration sound increases as an excitation signal is forcibly applied for several seconds.
- When adaptive tuning is executed, machine resonance is detected for a maximum of 10 s and a filter is generated. After filter generation, the adaptive tuning mode automatically shifts to the manual setting.
- Adaptive tuning generates the optimum filter with the currently set control gains.
- Adaptive vibration suppression control may provide no effect on a mechanical system which has complex resonance characteristics.
- This adaptive filter II (adaptive tuning mode) is different from the function of MR-J2S-_B_ and equivalent to that of MR-J4-_B_. Tuning accuracy can be set only in standard mode.

1) Operation
Adaptive filter II (adaptive tuning) is a function in which the servo amplifier detects machine resonance for a predetermined period of time and sets the filter characteristics automatically to suppress mechanical system vibration. Since the filter characteristics (frequency, depth) are set automatically, you need not be conscious of the resonance frequency of a mechanical system.

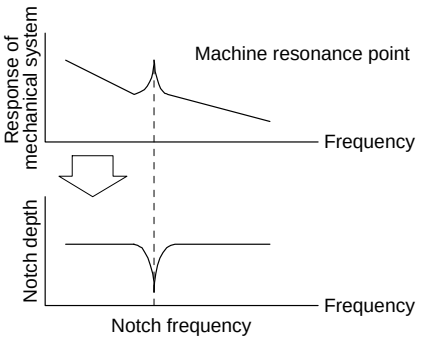

When machine resonance is large and frequency is low

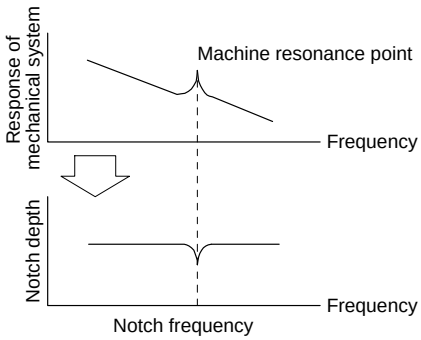

When machine resonance is small and frequency is high

(c) Vibration tough drive function

POINT
●Resetting the machine resonance frequency by the vibration tough drive function is performed constantly. However, the number of write times to the EEP-ROM is limited to once per hour. ●The vibration tough drive function does not detect a vibration of 100 Hz or less. ●When the machine resonance does not stop after the vibration tough drive function resets the machine resonance frequency, perform the adaptive tuning again.

This function prevents vibration by resetting a filter instantaneously when machine resonance occurs due to varied vibration frequency caused by equipment aging.
The vibration tough drive function operates when a detected machine resonance frequency is within ±30% for the machine resonance frequency estimated by the adaptive filter II function.

(d) Parameter

POINT

- As the initial value, "Adaptive vibration suppression control selection" is set to "Disabled (_ 0 _ _)" in [Pr. 25].
- When "Adaptive vibration suppression control selection" is set to "Enabled (_1_ _)" in [Pr. 25] during servo-off, the adaptive filter II is executed after servo-on.
- When "Adaptive vibration suppression control selection" is set to "Enabled (_1_ _)" in [Pr. 25], the machine resonance frequency is reset by the vibration tough drive function. When the machine resonance does not stop after the resetting, execute the adaptive filter II again.
- Before replacing a servo amplifier which uses this function with other equipment, set "Adaptive vibration suppression control selection" to "Disabled (_ 0 _ _)" in [Pr. 25] and clear the filter properties of the adaptive filter II.

The following shows the related parameters of the adaptive vibration suppression control function of MR-J4-_B_ -RJ020.
For others, refer to "MELSERVO-J4 series MR-J4-_B_-RJ020 MR-J4-T20 Servo Amplifier Instruction Manual".

<table>
<tr><th>No.</th><th>Symbol</th><th>Name and function</th><th>Initial value [unit]</th><th>Setting range</th></tr>
<tr><td>25</td><td>LPF</td><td>Low-pass filter/adaptive vibration suppression control
Select a low-pass filter/adaptive vibration suppression control. (Refer to section 7.1.2 of "MELSERVO-J4 series MR-J4-_B_-RJ020/MR-J4-T20 Servo Amplifier Instruction Manual".)
<table>
<tr><th>Setting digit</th><th>Explanation</th><th>Initial value</th></tr>
<tr><td>_ _ _ x</td><td>For manufacturer setting</td><td>0h</td></tr>
<tr><td>_ _ x _</td><td>Low-pass filter selection
0: Available (Automatic adjustment)
1: Disabled
When available is selected, the filter in the zone expressed by the following formula is automatically set.
For 1 kW or less
$\frac{\text{VG2 setting value} \times 10}{2\pi \times (1 + \text{GD2 setting value} \times 0.1)}$ [Hz]
For 2 kW or more
$\frac{\text{VG2 setting value} \times 5}{2\pi \times (1 + \text{GD2 setting value} \times 0.1)}$ [Hz]</td><td>0h</td></tr>
<tr><td>_ x _ _</td><td>Adaptive vibration suppression control selection
0: Disabled
1: Enabled
When the servo amplifier detects mechanical resonance with the vibration tough drive function after the automatic filter setting of the adaptive filter II is completed, reset the filters.

This is available with servo amplifiers with software version A9 or later.</td><td>0h</td></tr>
<tr><td>x _ _ _</td><td>For manufacturer setting</td><td>0h</td></tr>
</table></td><td>0000</td><td>Refer to the Name and function column.</td></tr>
</table>

No.	Symbol	Name and function	Initial value [unit]	Setting range
61	NH2	Machine resonance suppression filter 2 Select the machine resonance suppression filter. (Refer to section 7.1.1 of "MELSERVO-J4 series MR-J4-_B_-RJ020 MR-J4-T20 Servo Amplifier Instruction Manual".) Set "00" when the active vibration suppression control is set as "Enabled" (parameter [Pr. 25]: _1 _ _).	0000	0000h to 031Fh

Setting digit	Explanation	Initial value
_ _ x x	Notch frequency selection Refer to table 5.6 for the setting value.	00h
_ x _ _	Notch depth selection 0: -40 dB 1: -14 dB 2: -8 dB 3: -4 dB	0h
x _ _ _	For manufacturer setting	0h

Table 5.6 Notch frequency selection

Setting value	Frequency [Hz]	Setting value	Frequency [Hz]
00	Disabled	10	281.3
01	4500	11	264.7
02	2250	12	250
03	1500	13	236.8
04	1125	14	225
05	900	15	214.3
06	750	16	204.5
07	642.9	17	195.7
08	562.5	18	187.5
09	500	19	180
0A	450	1A	173.1
0B	409.1	1B	166.7
0C	375	1C	160.1
0D	346.2	1D	155.2
0E	321.4	1E	150
0F	300	1F	145.2

10. Alarm

10.1 Alarm/Warning List

When an error occurs during operation, an alarm or a warning is displayed. When an alarm or a warning occurs, take the proper action as described in the "MR-J4-_B_RJ020/MR-J4-T20 Servo Amplifier Instruction Manual".
After removing the cause of the alarm, the alarm can be canceled using any of the methods marked with ○ in the alarm reset column in the table below. (The shaded parts indicate the differences.)

	Number	Name	Stop method (Note 6)	Reset alarm		
				Power-off to power-on	Reset an error	Reset the CPU
Alarm	10	Undervoltage	EDB	○	○	○
	12. _ (Note 5)	Memory error 1	DB	○		
	13	Clock error	DB	○		
	15	Memory error 2	DB	○		
	16	Encoder error 1	DB	○		
	17	Board error	DB	○		
	19. _	Memory error 3	DB	○		
	1A	Motor combination error	DB	○		
	20	Encoder error 2	EDB	○		
	24	Main circuit error	DB	○	○	○
	25	Loss of absolute position	DB	○ (Note 2)		
	30	Regenerative error	DB	○ (Note 1)	○ (Note 1)	○ (Note 1)
	31	Overspeed	EDB	○	○	○
	32	Overcurrent	DB	○	○ (Note 4)	○ (Note 4)
	33	Overvoltage	EDB	○	○	○
	34	CRC error	EDB	○	○	○
	35	Command frequency error	EDB	○	○	○
	36	Transfer error	EDB	○	○	○
	37	Parameter error	DB	○		○ (Note 4)
	3E. 2	Mode change error	DB	○		○ (Note 3)
	45	Main circuit element overheat	EDB	○ (Note 1)	○ (Note 1, 4)	○ (Note 1, 4)
	46	Servo motor overheat	DB	○ (Note 1)	○ (Note 1)	○ (Note 1)
	50	Overload 1	EDB	○ (Note 1)	○ (Note 1)	○ (Note 1)
	51	Overload 2	DB	○ (Note 1)	○ (Note 1)	○ (Note 1)
	52	Error excessive	EDB	○	○	○
	8E	Serial communication error	EDB	○	○	○
	888	Watchdog	DB	○		
Warning	92	Battery disconnection warning		Warnings are automatically canceled when the cause is removed.		
	96	Home position setting error warning				
	9F	Battery warning				
	E0	Excessive regeneration alarm				
	E1	Overload alarm				
	E3	Absolute position counter alarm				
	E4	Parameter alarm				
	E6	Servo forced stop warning	EDB (Note 7)			
	E7	Controller emergency stop warning	EDB			
	E9	Main circuit off warning	DB			
	EE	SSCNET error warning				

Note 1. After the cause of the alarm is removed, leave it to cool for about 30 minutes.
2. To confirm connection to the servo system controller, the alarm may not be reset if the power is not turned on twice or more.
3. It is only reset when mode is set correctly.
4. Alarm factors may not be removed depending on the cause of the alarm.
5. Numerical figures after a decimal point may not be displayed.
6. There are two stop methods of DB and EDB.
DB: Stop with a dynamic brake
EDB: Stop with an electronic dynamic brake (Only available for the specific servo motor)
Refer to the following table for specific servo motors. The stop method other than the specific servo motor is DB.

Series	Servo motor
HG-KR	HG-KR053/HG-KR13/HG-KR23/HG-KR43
HG-MR	HG-MR053/HG-MR13/HG-MR23/HG-MR43
HG-SR	HG-SR51/HG-SR52

7. When STO1 or STO2 is turned off (the CN8 short-circuit connector is disconnected), the stop method is DB.

Display	Name	Description	Cause	Action
3E.2	Mode change error	The operating mode setting does not match the actual operating mode.	Switched on with the MR-J4-T20 removed.	1. Connect the MR-J4-T20 and restart the servo amplifier. 2. With the application of "MR-J4(W)-B Change mode" supplied with the MR Configurator2, change to "J2S Compatibility Mode".

11. DIMENSIONS

11.1 Comparison of Dimensions

The following table shows the combined dimensions of the servo amplifier and options.
(1) shows the amount of increased unit width compared with MR-J2S-_B_. For the sections of the table showing "None", the unit's width is smaller compared with MR-J2S. No interference occurs as the installation intervals for all units do not exceed 10 mm.
(2) shows permissible installation intervals for units whose width increases. Even when using the conversion unit, it is recommended to keep the interval between the units 10 mm or more.

Dimensions

Unit MR-J4-_-RJ020	MR-J4-_B_-RJ020 MR-J4-T20 combined dimensions width × height × length	MR-J2S-_B_ width × height × length	(1) Unit width increase	(2) Permissible installation interval (Note 1)	Mounting hole Compatibility (Note 3)
10B/20B	52 × 168 × 135	50 × 168 × 135	2 mm (Note 2)	8 mm	○
40B/60B	52 × 168 × 170	70 × 168 × 135	None		○
70B/100B	72 × 168 × 185	70 × 168 × 190	2 mm (Note 2)	8 mm	△
200B/350B	97 × 168 × 195	90 × 168 × 195	7 mm (Note 2)	3 mm	△
500B	107 × 250 × 200	130 × 250 × 200	None		△
700B	174 × 300 × 200	180 × 350 × 200	None		△
11KB/15KB	220 × 400 × 260	260 × 400 × 260	None		△
22KB	260 × 400 × 260	350 × 400 × 260	None		△
DU30KB/DU37KB	300 × 380 × 300	450 × 500 × 300	(Note 4)	(Note 4)	△
60B4/100B4	72 × 168 × 195	90 × 168 × 195	None		△
200B4	97 × 168 × 195	90 × 168 × 195	7 mm (Note 2)	3 mm	△
350B4	107 × 250 × 200	130 × 250 × 200	None		△
500B4	132 × 250 × 200	130 × 250 × 200	2 mm (Note 2)	8 mm	△
700B4	174 × 300 × 200	180 × 350 × 200	None		△
11KB4/15KB4	220 × 400 × 260	260 × 400 × 260	None		△
22KB4	260 × 400 × 260	350 × 400 × 260	None		△
DU30KB4	240 × 380 × 300	380 × 500 × 300	(Note 4)	(Note 4)	△
DU37KB4	240 × 380 × 300	450 × 500 × 300	(Note 4)	(Note 4)	△
DU45KB4/DU55KB4	300 × 380 × 300	450 × 500 × 300	(Note 4)	(Note 4)	△

Note 1. These are the installation intervals on the right side. All backslash areas are 10 mm or more, as in MR-J4.
2. Though the unit itself is wider than MR-J2S, it poses no problem because it fits within the 10 mm installation interval.
3. "△" indicates that the mounting holes are different.
4. Replacement of large capacity of 30 kW or more requires change of the converter unit.
For comparison of dimensions, refer to "1.4 Installation" in "Part 5: Review on Replacement of MR-J2S-30 kW or more with MR-J4-_DU_".

11.2 Dimensions

These are external views when 100 W, 3.5 kW, and 5 kW servo amplifiers are combined with MR-J4-T20. The views from the bottom show the increases in width from that of the MR-J4 standard model. (For dimensions when the servo amplifier in different capacities is combined with the MR-J4-T20, refer to "[Appendix 1] 11.2.3 Dimensions (MR-J4-_B_-RJ020 + MR-J4-T20)".

11.2.1 Servo amplifier

MR-J4-10B-RJ020
MR-J4-T20

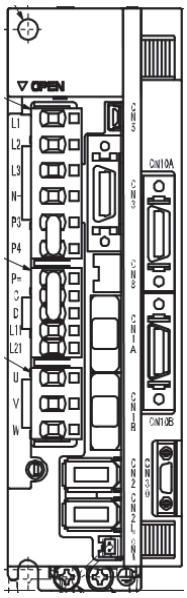

MR-J4-350B-RJ020
MR-J4-T20

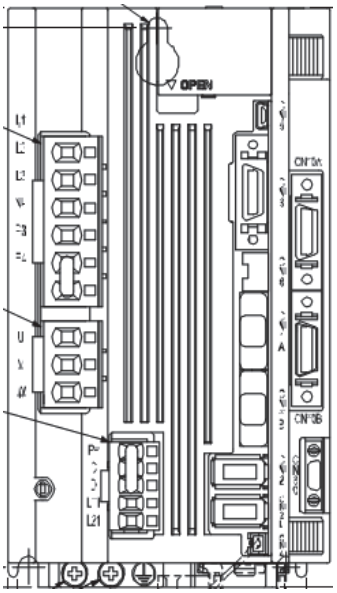

MR-J4-500B-RJ020, MR-J4-T20

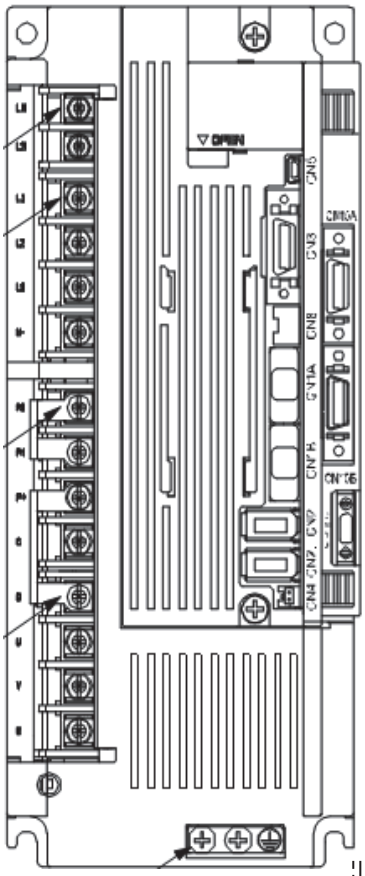

12mm

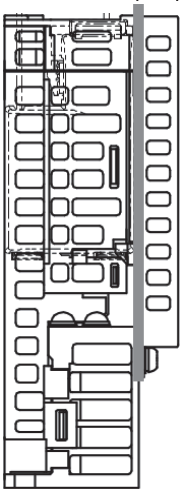

7mm

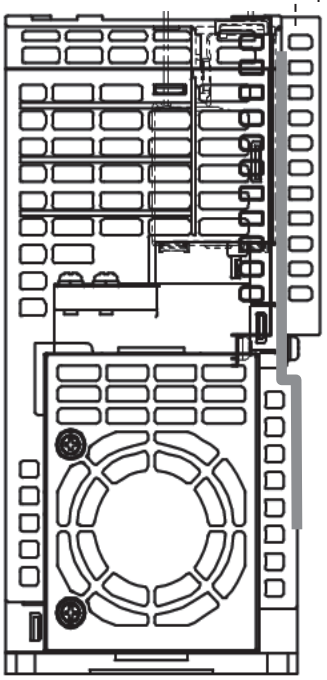

2mm

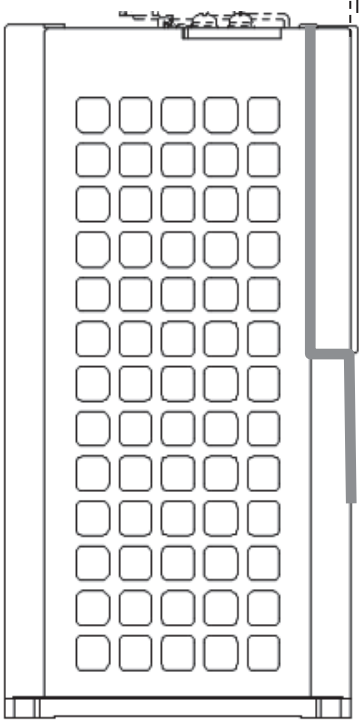

Fig. 1. Dimensions

11.2.2 Dimensions (MR-J4-T20)

The dimensions of MR-J4-T20 are shown below.

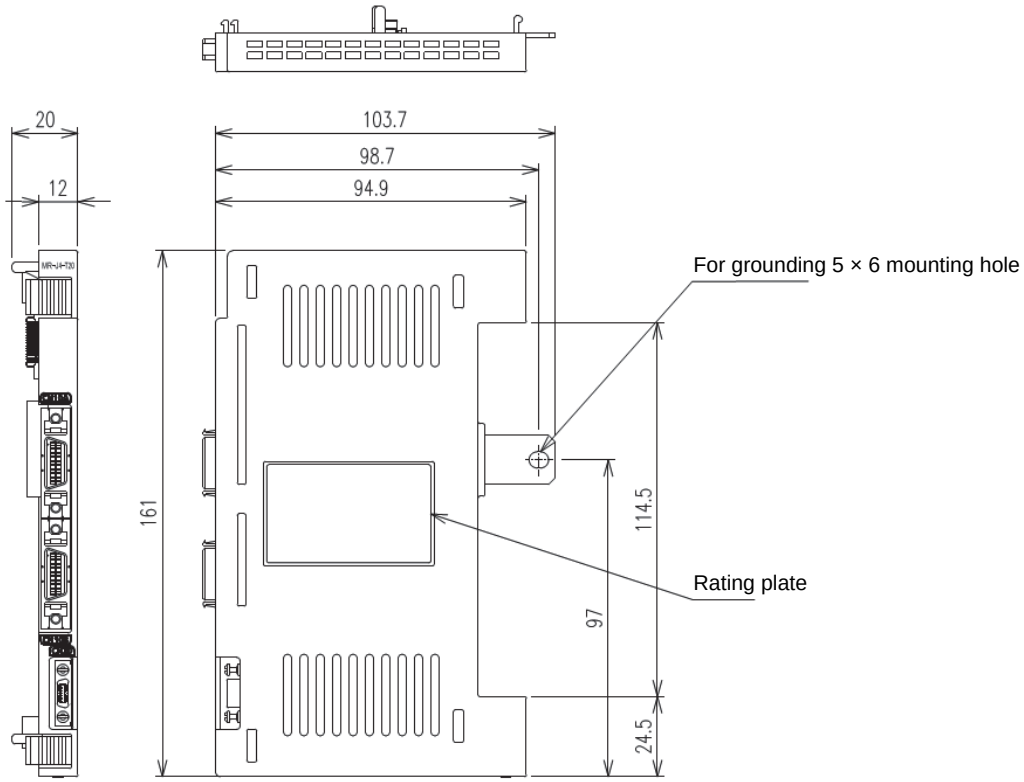

Fig. 2. Dimensions (MR-J4-T20)

11.2.3 Dimensions (MR-J4-_B_-RJ020 + MR-J4-T20)

Comparison of 200 V class / 100 V class dimensions

MR-J2S series dimensions	MR-J4-_B_-RJ020 series + MR-J4-T20 dimensions

MR-J2S-10B_, MR-J2S-20B_

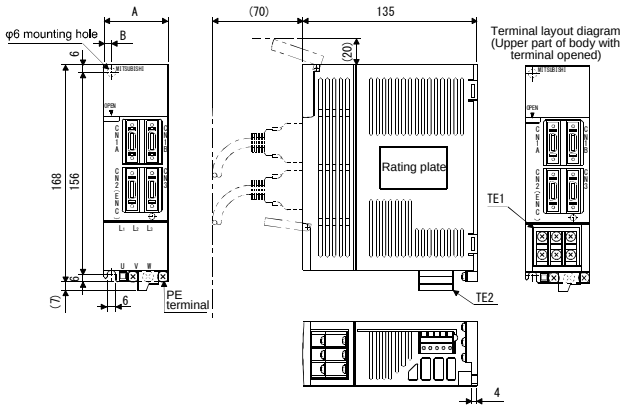

Servo amplifier	Variable dimensions		Mass [kg]
	A	B	
MR-J2S-10B (1)	50	6	0.7
MR-J2S-20B (1)			

MR-J4-10B-RJ020, MR-J4-20B -RJ020

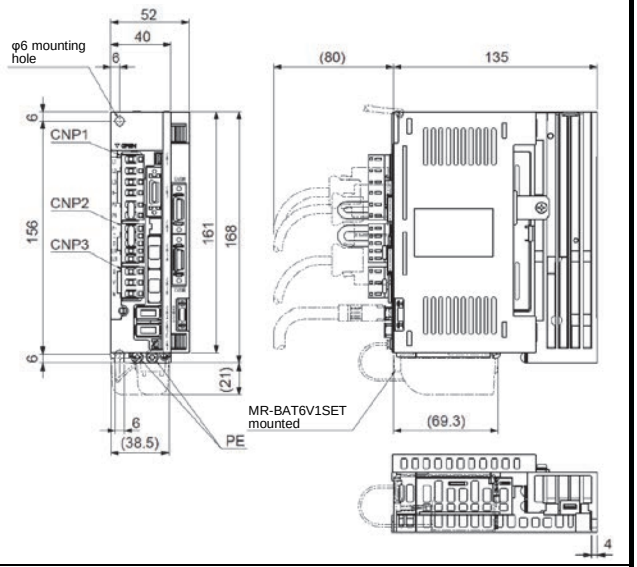

MR-J2S-40B_, MR-J2S-60B

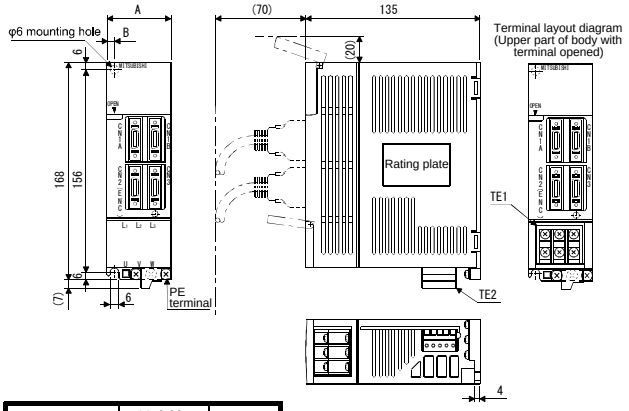

Servo amplifier	Variable dimensions		Mass [kg]
	A	B	
MR-J2S-40B (1)	70	22	1.1
MR-J2S-60B			

MR-J4-40B-RJ020, MR-J4-60B-RJ020

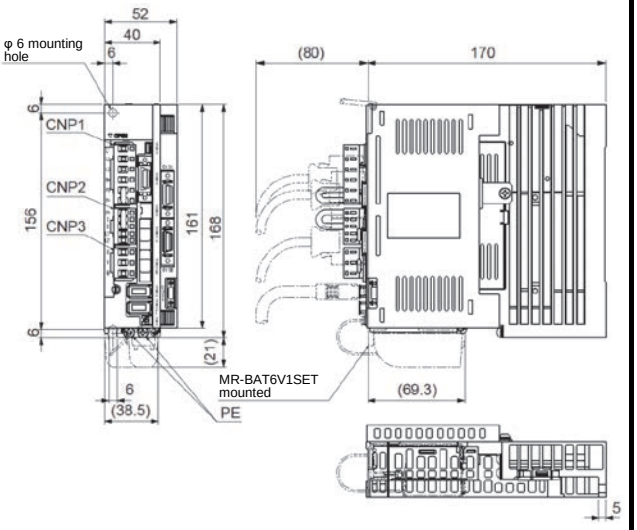

MR-J2S-70B, MR-J2S-100B

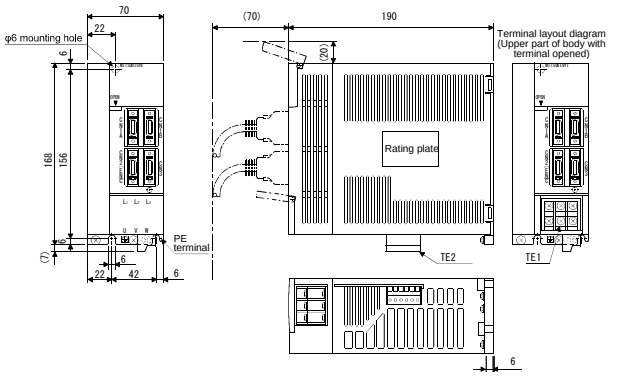

ervo amplifier	Mass [kg]
MR-J2S-70B	1.7
MR-J2S-100B	

MR-J4-70B-RJ020, MR-J4-100B-RJ020

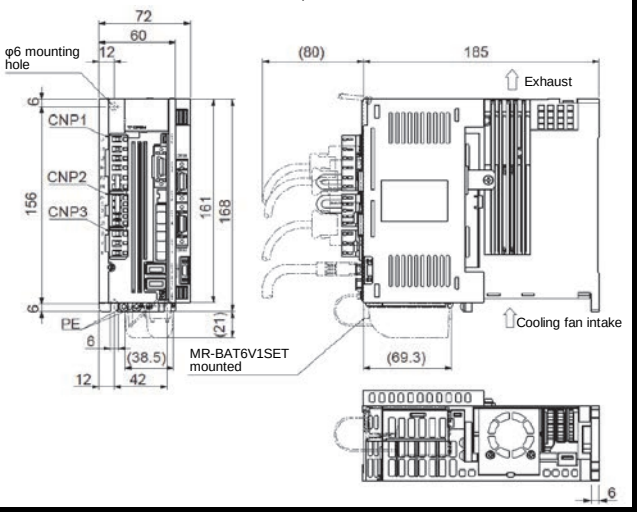

[Appendix 1] Summary of MR-J4_B_-RJ020 + MR-J4-T20

MR-J2S series dimensions	MR-J4-_B_-RJ020 series + MR-J4-T20 dimensions

MR-J2S-200B

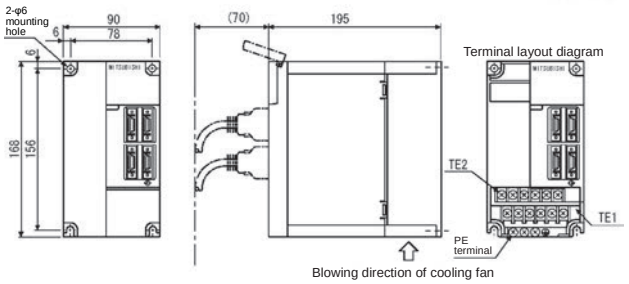

Servo amplifier	Mass [kg]
MR-J2S-200B	2.0

MR-J4-200B-RJ020

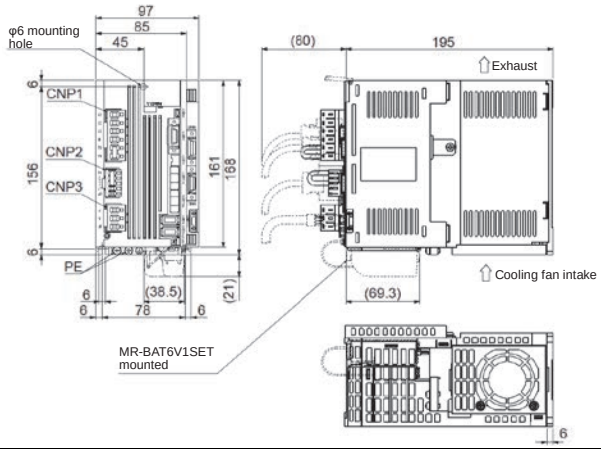

MR-J2S-350B

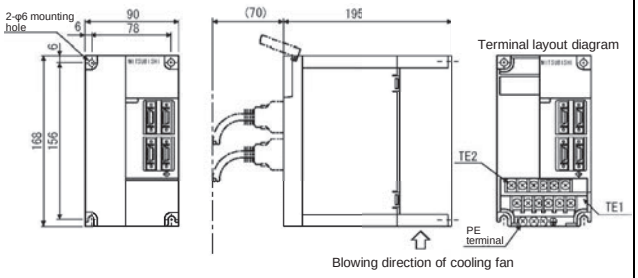

Servo amplifier	Mass [kg]
MR-J2S-350B	2.0

MR-J4-350B-RJ020

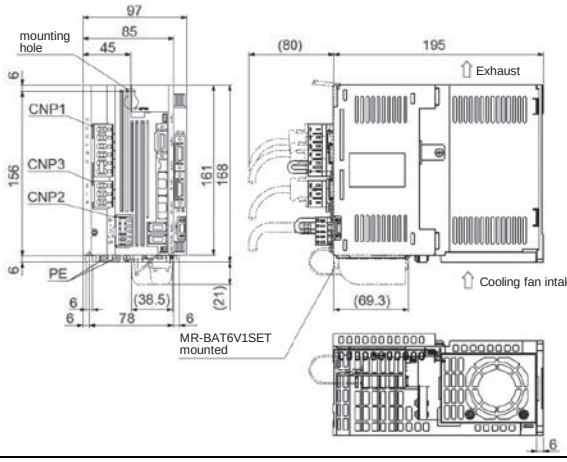

MR-J2S-500B

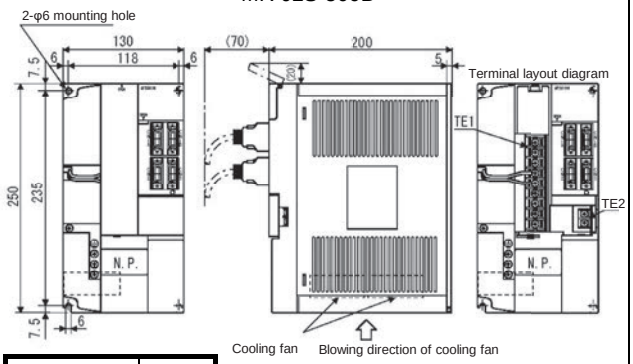

Servo amplifier	Mass [kg]
MR-J2S-500B	4.9

MR-J4-500B-RJ020

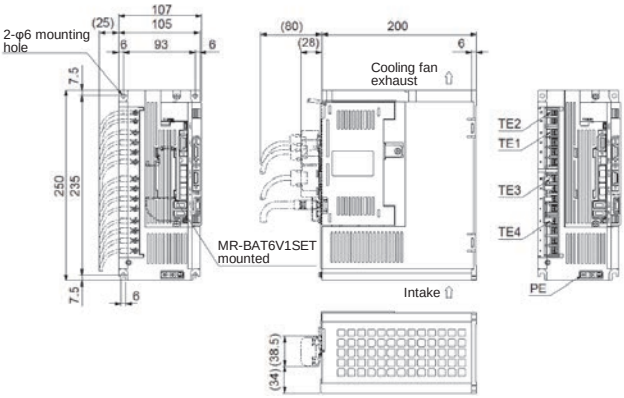

MR-J2S-700B

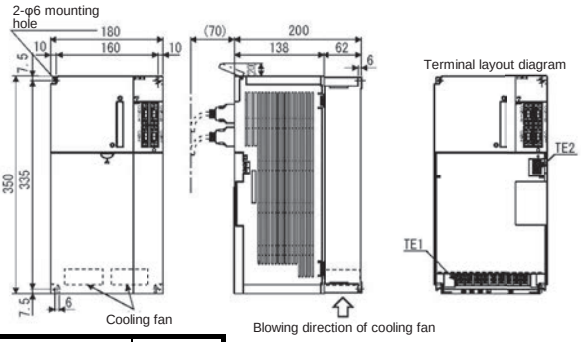

Servo amplifier	Mass [kg]
MR-J2S-700B	7.2

MR-J4-700B-RJ020

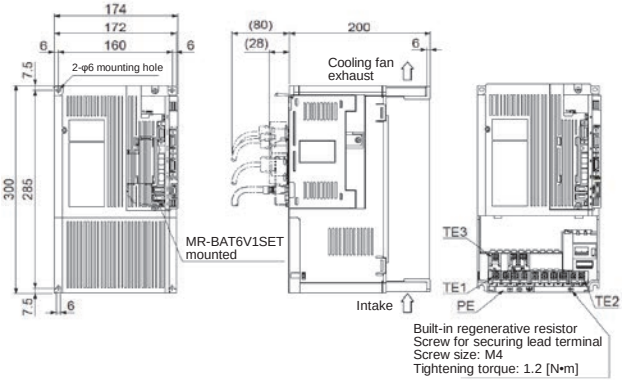

[Appendix 1] Summary of MR-J4_B_-RJ020 + MR-J4-T20

MR-J2S series dimensions	MR-J4-_B_-RJ020 series + MR-J4-T20 dimensions

MR-J2S-11KB, MR-J2S-15KB

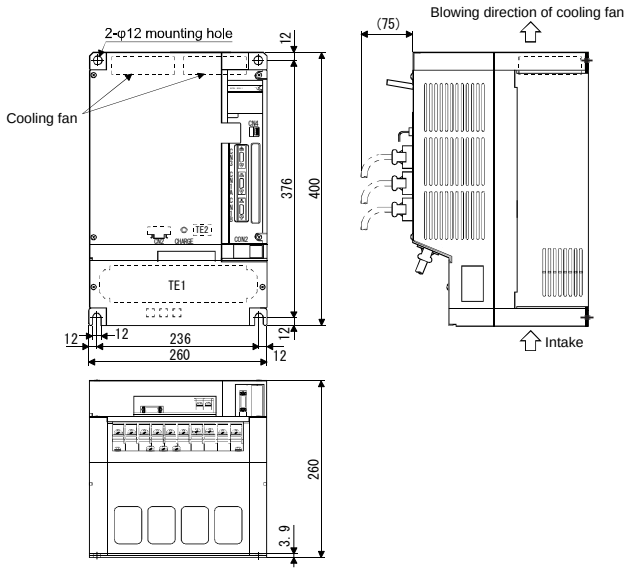

Servo amplifier	Mass [kg]
MR-J2S-11KB	15
MR-J2S-15KB	16

MR-J4-11KB-RJ020, MR-J4-15KB-RJ020

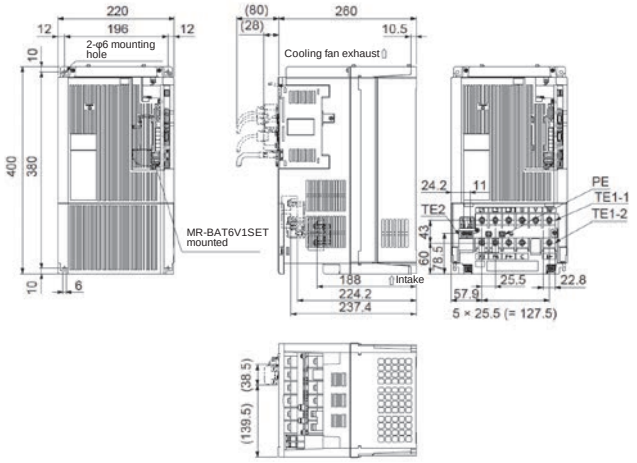

MR-J2S-22KB

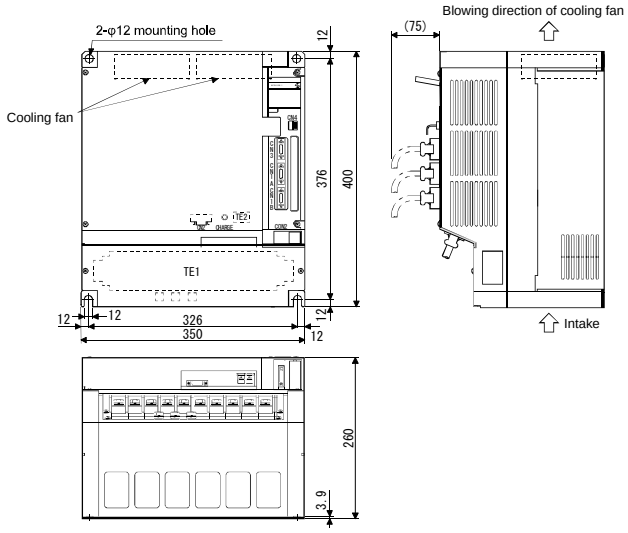

Servo amplifier	Mass [kg]
MR-J2S-22KB	20

MR-J4-22KB-RJ020

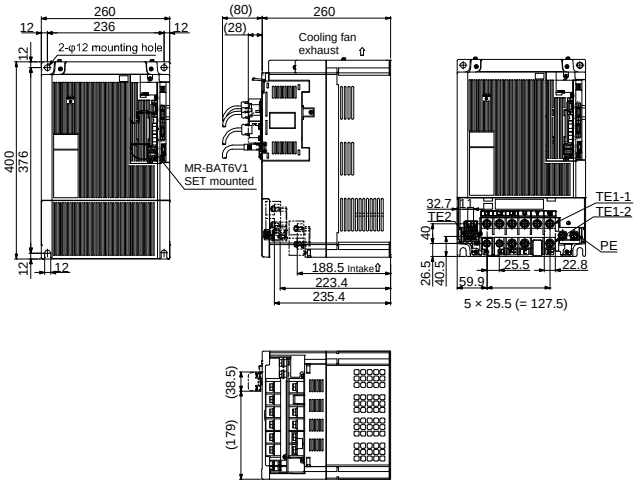

[Appendix 1] Summary of MR-J4_B_-RJ020 + MR-J4-T20

MR-J2S series dimensions	MR-J4-_B_-RJ020 series + MR-J4-T20 dimensions
MR-J2S-30KB, MR-J2S-37KB	MR-J4-DU30KB-RJ020, MR-J4-DU37KB-RJ020
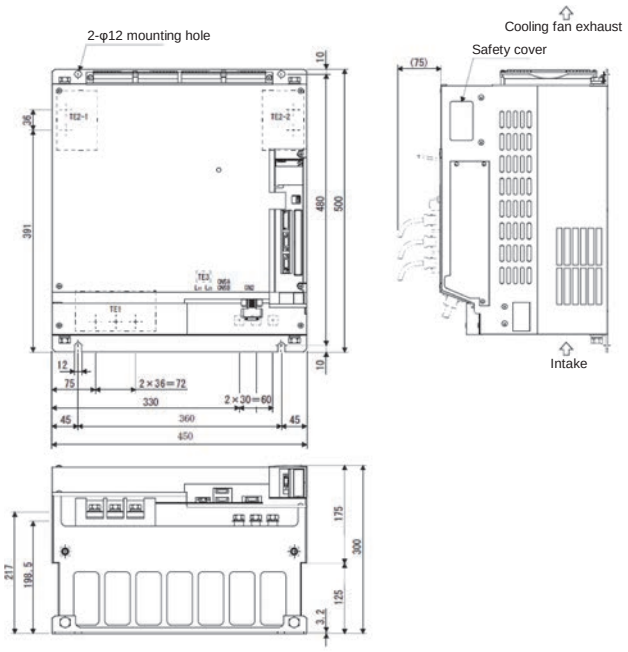	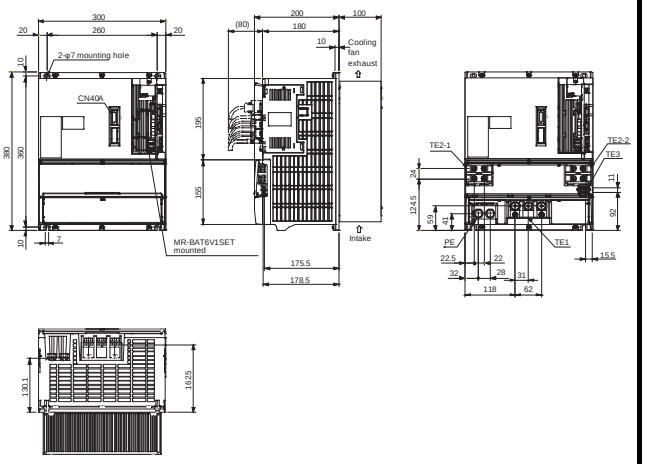
MR-HP30KA	MR-CR55K
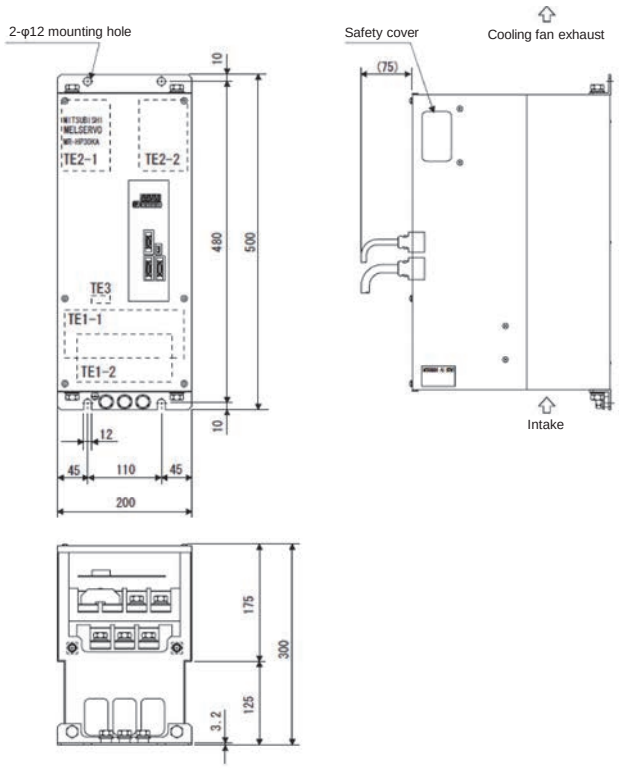	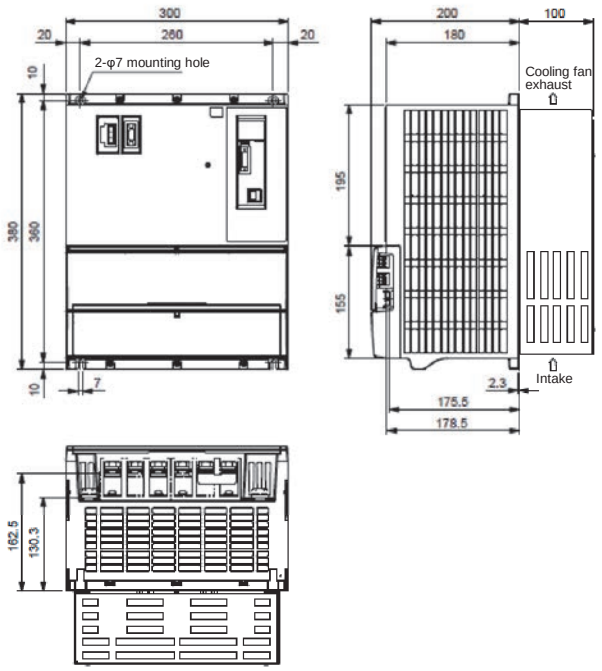

Comparison of 400 V class dimensions

MR-J2S series dimensions	MR-J4-_B_-RJ020 series + MR-J4-T20 dimensions
MR-J2S-60B4, MR-J2S-100B4 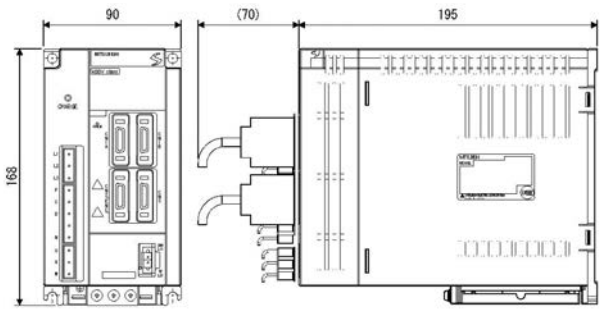	MR-J4-60B4-RJ020, MR-J4-100B4-RJ020 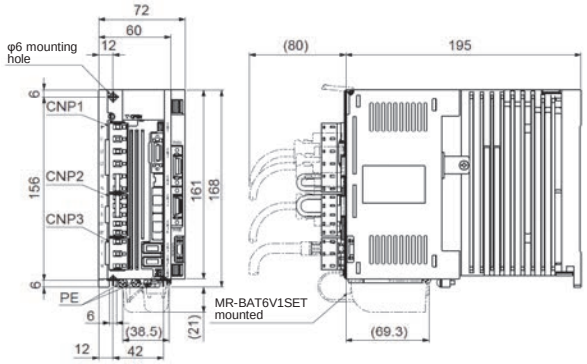
MR-J2S-200B4 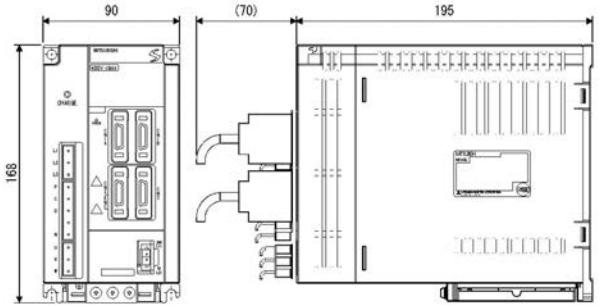	MR-J4-200B4-RJ020 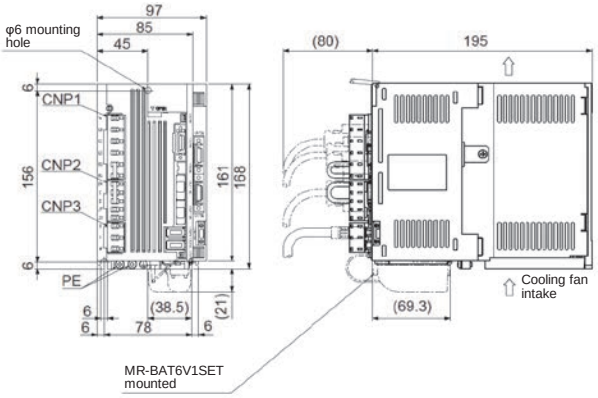
MR-J2S-350B4 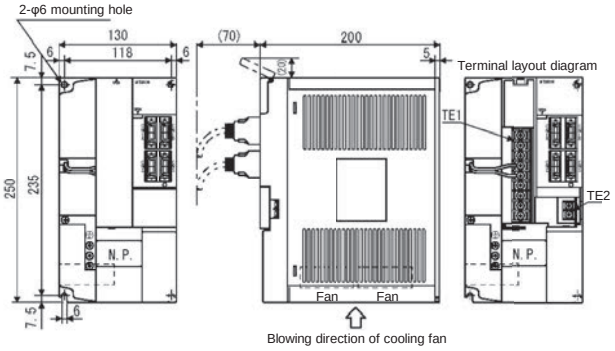	MR-J4-350B4-RJ020 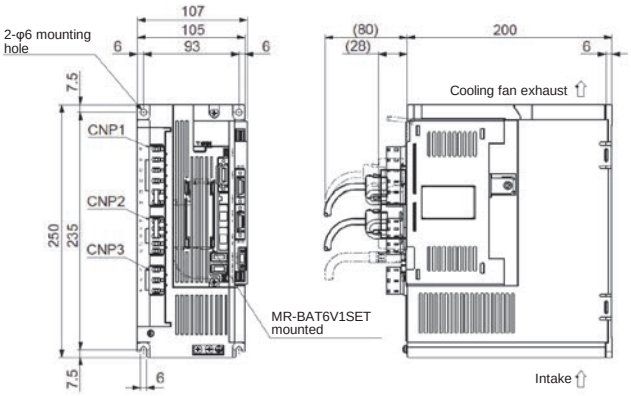

[Appendix 1] Summary of MR-J4_B_-RJ020 + MR-J4-T20

MR-J2S series dimensions	MR-J4-_B_-RJ020 series + MR-J4-T20 dimensions
MR-J2S-500B4	MR-J4-500B4-RJ020
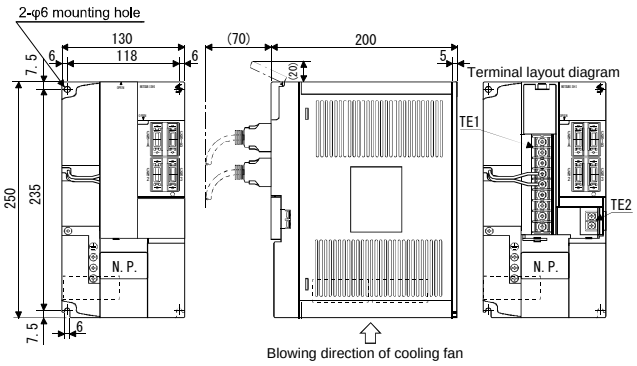	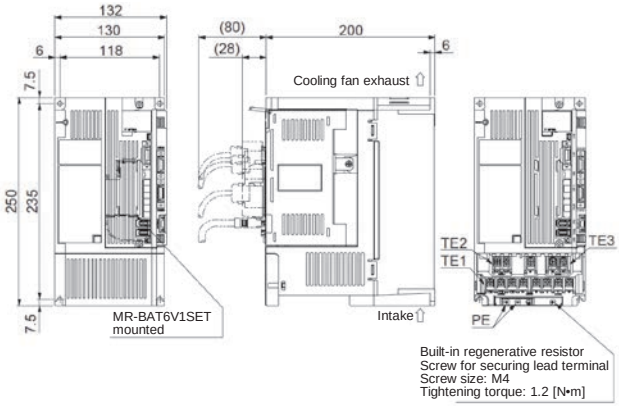
MR-J2S-700B4	MR-J4-700B4-RJ020
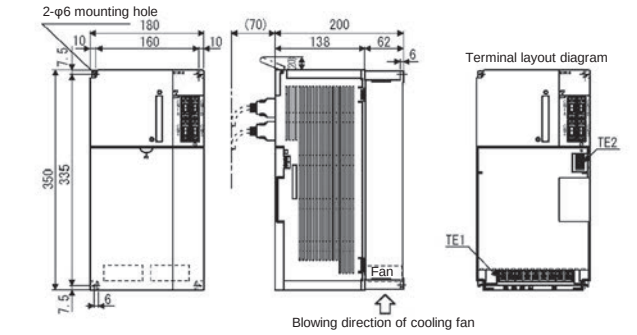	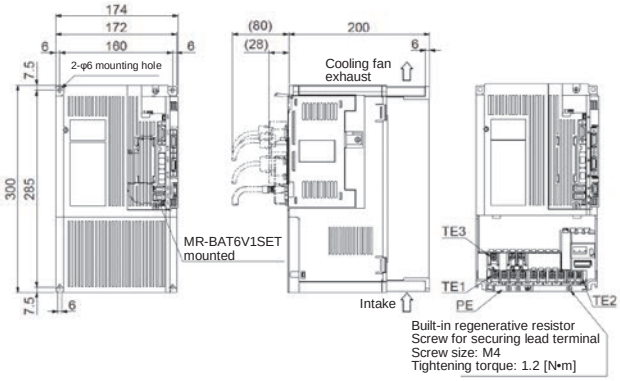
MR-J2S-11KB4, MR-J2S-15KB4	MR-J4-11KB4-RJ020, MR-J4-15KB4-RJ020
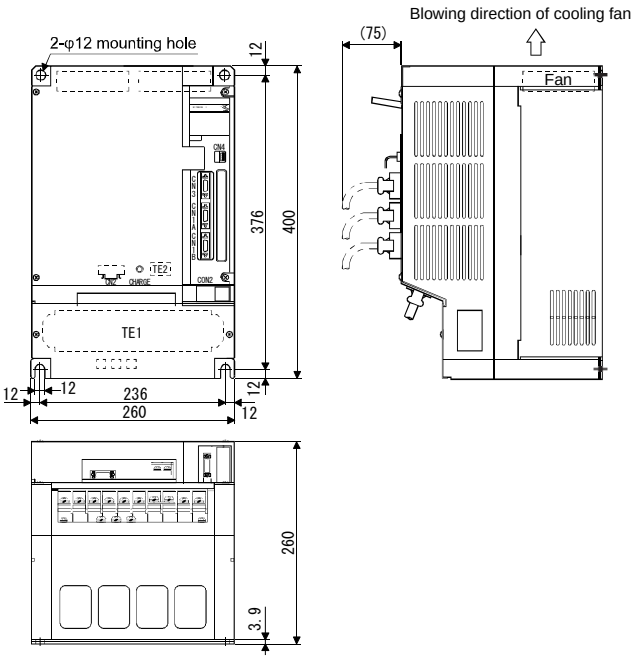	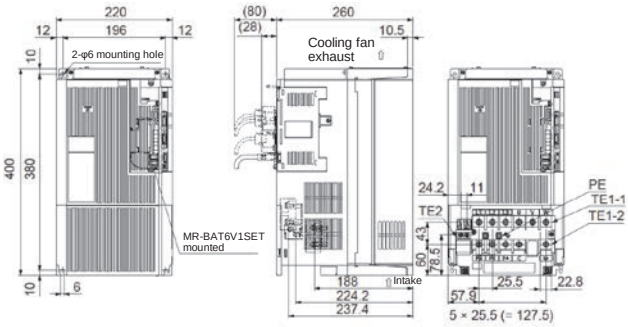

MR-J2S series dimensions	MR-J4-_B_-RJ020 series + MR-J4-T20 dimensions
MR-J2S-22KB4 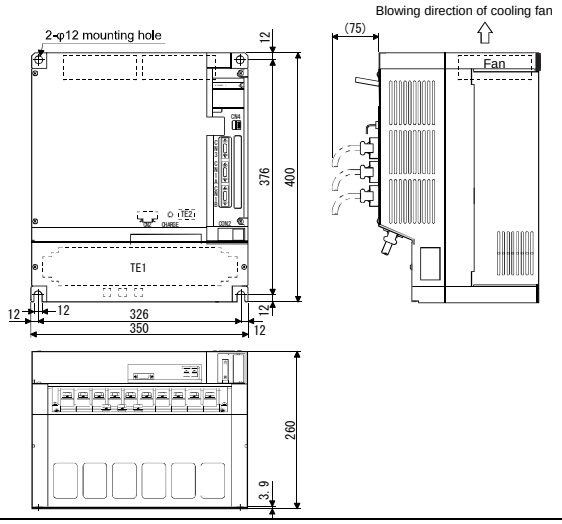	MR-J4-22KB4-RJ020 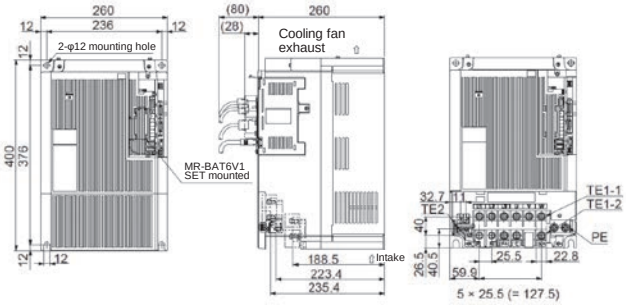
MR-J2S-30KB4 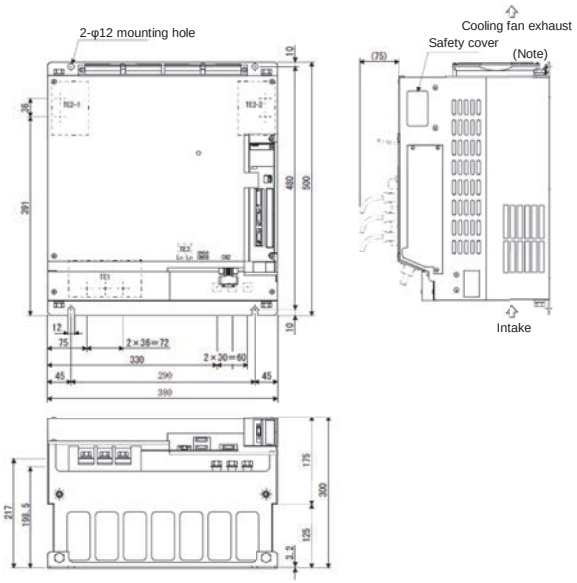	MR-J4-DU30KB4-RJ020 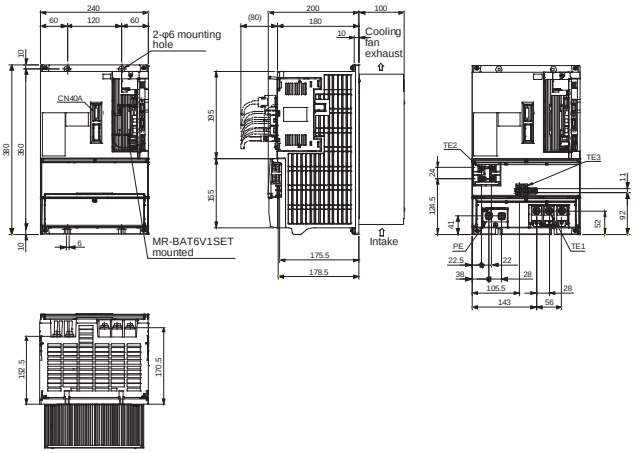
MR-J2S-37KB4 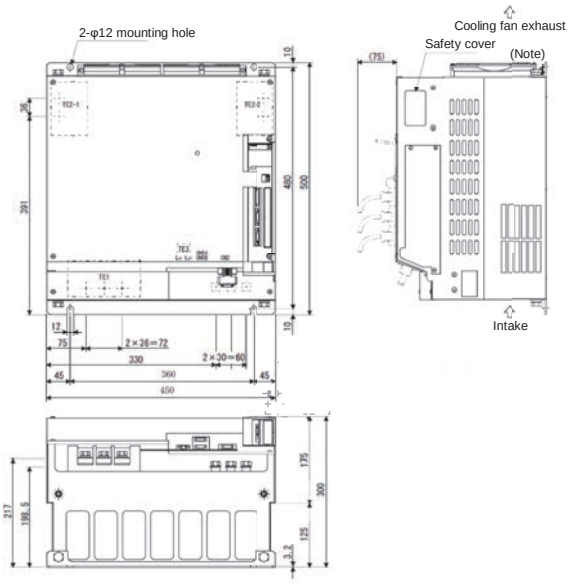	MR-J4-DU37KB4-RJ020 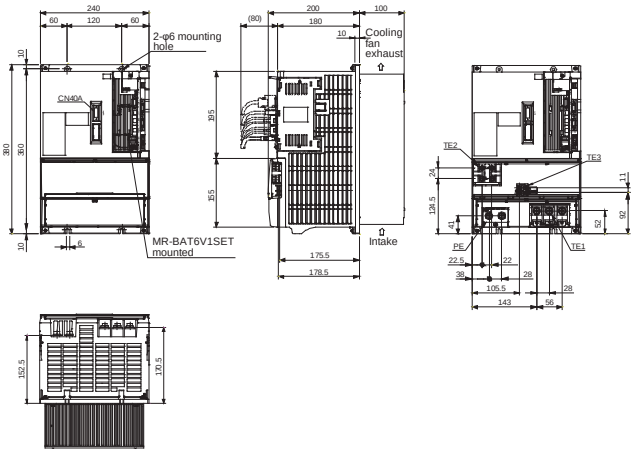

[Appendix 1] Summary of MR-J4_B_-RJ020 + MR-J4-T20

MR-J2S series dimensions	MR-J4-_B_-RJ020 series + MR-J4-T20 dimensions
MR-J2S-45KB4, MR-J2S-55KB4	MR-J4-DU45KB4-RJ020, MR-J4-DU55KB4-RJ020
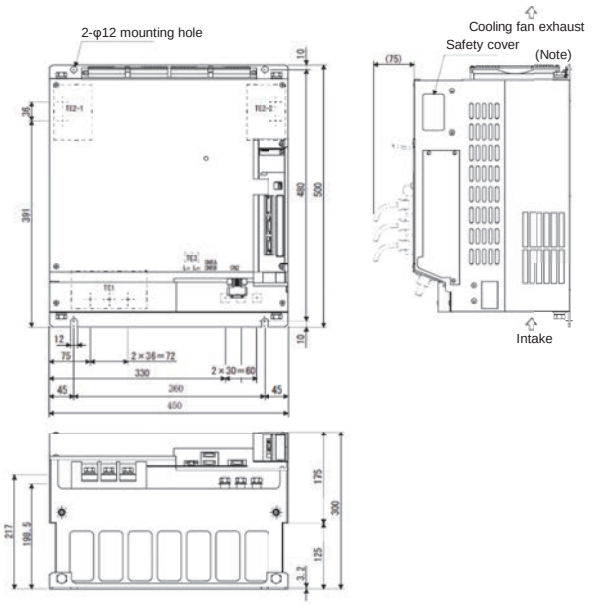	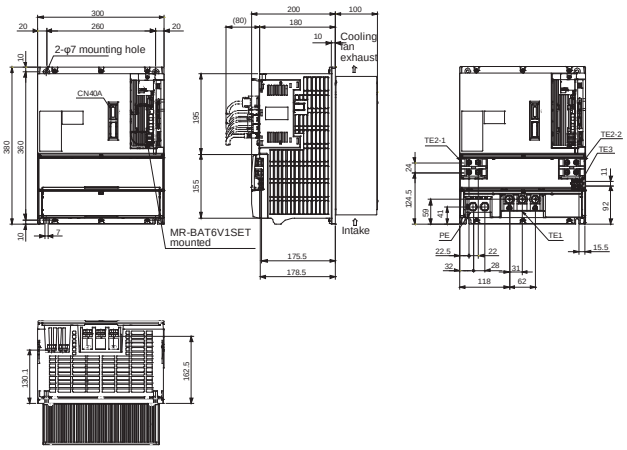
MR-HP55KA4	MR-CR55K4
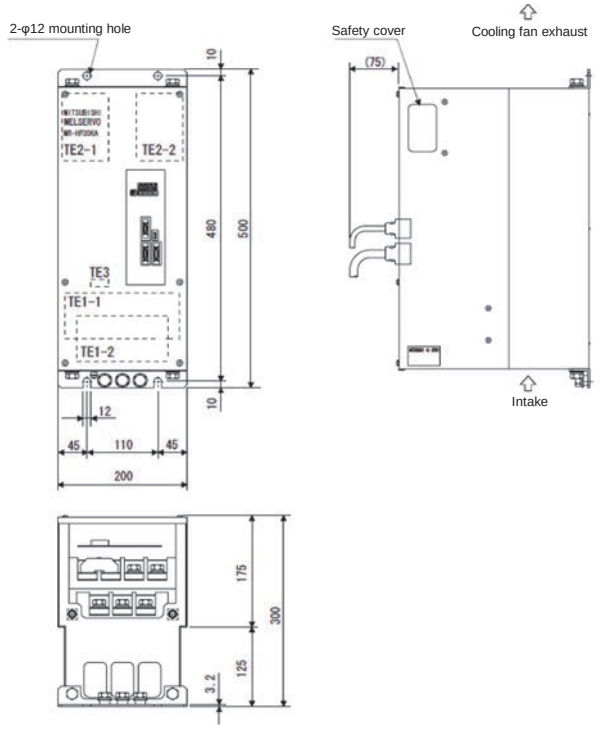	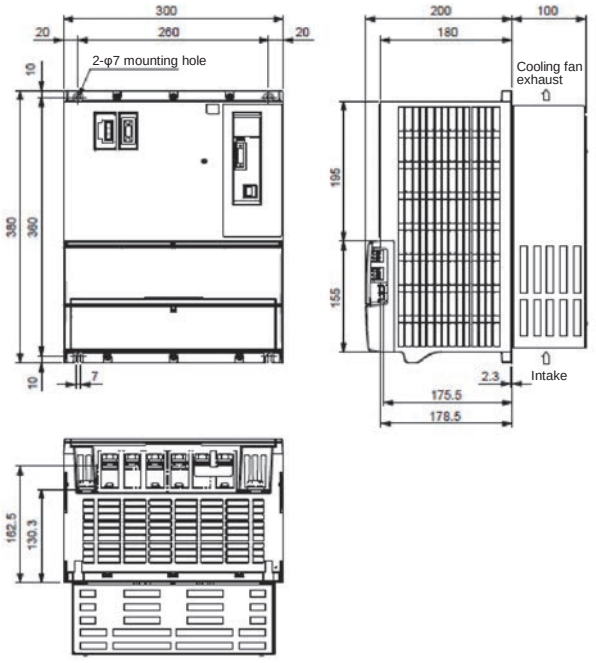

12. MODE SWITCHING METHOD

POINT

●There are function limits for the MRJ4-_B servo amplifier when using the MRJ4-_B_-RJ020 servo amplifier in J4 mode. Regarding other functions, they are the same as for the MRJ4-_B servo amplifier.

Function	Availability	
	MR-J4-_B_	MR-J4-_B_-RJ020
CN2L connector	None	Yes (Not compatible)
Linear servo system	Compatible	Not compatible
Direct drive servo system	Compatible	Not compatible
Fully closed loop system	Compatible	Not compatible

12.1 Mode Switching Method from J2S Compatibility Mode to J4 Mode

(1) Turn on the servo amplifier with the MR-J4-T20 removed.

(2) Run the application of "MR-J4(W)-B Change mode" and verify that "J2S Compatibility Mode" is not displayed in "Compatibility Mode". If displayed, try again from (1) of this section.

(3) Select "Change the mode" and then choose "J4 mode". Do not choose any control mode other than "Standard control mode" for the "Operation Mode".

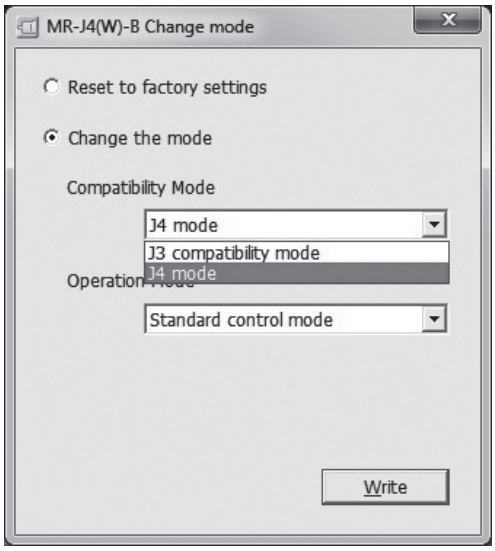

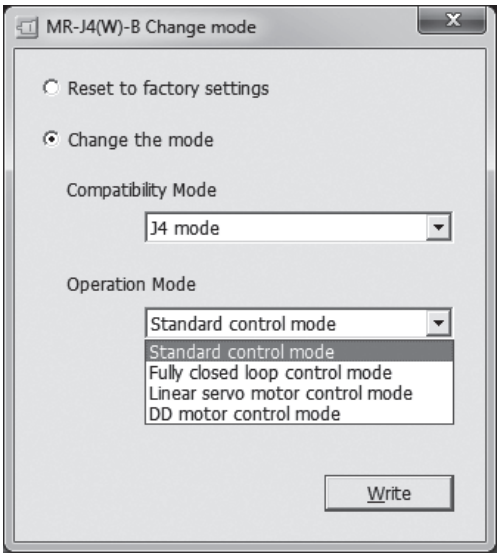

(4) Click the "Write (W)" button.

(5) By cycling the power supply of the servo amplifier, the mode will switch to J4 mode.

12.2 Mode Switching Method from J4 Mode to J2S Compatibility Mode

(1) Turn on the servo amplifier with MR-J4-T20 mounted.

(2) Run the application of "MR-J4(W)-B Change mode" and verify that "J2S Compatibility mode" is displayed in "Compatibility Mode". If not, try again from (1) of this section.

(3) Select "Switch mode" and then choose "J2S compatibility mode". Only standard control mode can be selected for the operation mode.

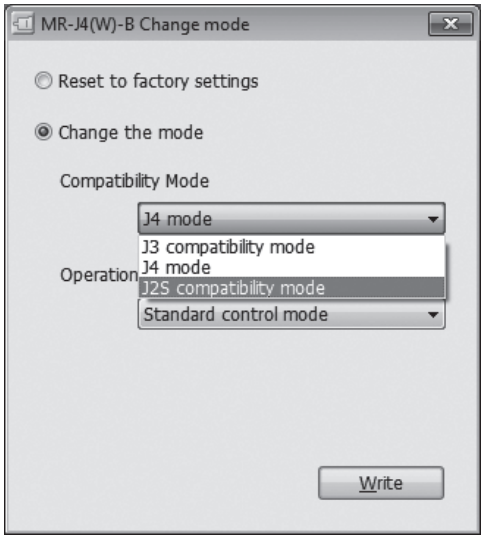

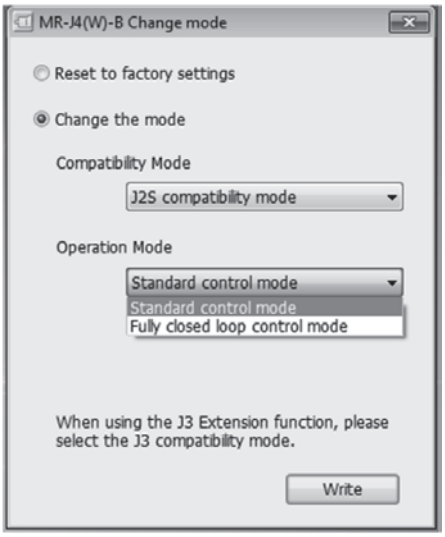

(4) Click the "Write" button.

(5) By cycling the power supply of the servo amplifier, the mode will switch to J2S compatibility mode.

POINT
●For the details of the parameters, refer to "MR-J4-_B_-RJ020 Servo Amplifier Instruction Manual (SH(NA)030125)".

13. OPTIONS AND PERIPHERAL EQUIPMENT

⚠ WARNING	●Before connecting options or peripheral equipment, turn off the power and wait for 15 minutes or more until the charge lamp turns off. Then, confirm that the voltage between P+ and N- is safe with a voltage tester and others. Otherwise, an electric shock may occur. In addition, when confirming whether the charge lamp is off or not, always check from the front of the servo amplifier.

⚠ CAUTION	●Do not use peripheral equipment or options other than those specified in this document as a malfunction and fire could result.

This chapter only describes the encode cable and regenerative option for connecting the HC-_FS series and the HA-_FS series servo motor to the MR-J4-_B_-RJ020 servo amplifier. For details of the options for the servo amplifier, refer to Chapter 11 of the "MR-J4-_B_-RJ020 MR-J4-T20 Servo Amplifier Instruction Manual". For options for the HC-_FS series and the HA-_FS series servo motors, refer to "MR-J2S-_B Servo Amplifier Instruction Manual (SH(NA)030007)" and "MELSERVO Servo Motor Instruction Manual (SH(NA)3181)".

POINT

●Protection grades shown on the cable and the connector indicate dust and waterproof level when the connector and the cable are installed on the servo motor. If protection grades of the cable, the connector and the servo motor are different, all the protection grades are dependent on the lower grades.

For the cable and the connector used for this servo, purchase options described in this section.

13.1 Encoder Cable Combination

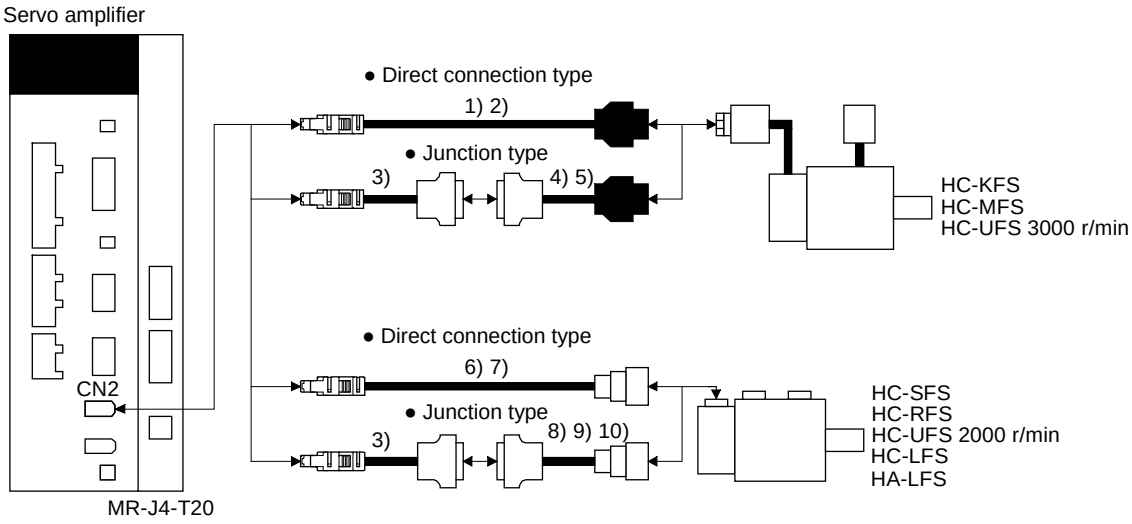

13.2 Encoder Cable List

No.	Product name	Model	Description	Application
1)	Encoder cable	MR-EKCBL_M-L Cable length: 20, 30 m	 For details, refer to section 13.3 (1).	IP20
2)	Encoder cable	MR-EKCBL_M-H Cable length: 20, 30, 40, 50 m		IP20 Long bending life
3)	Encoder cable	MR-J3CH00 Cable length: 0.2 m	 For details, refer to section 13.3 (2).	IP20
4)	Encoder cable	MR-JCCBL_M-L Cable length: 2, 5, 10, 20, 30 m	Connector: 10120-3000PE Shell kit: 10320-52F0-008 (3M or equivalent) Housing: 1-172161-9 Connector pin: 170359-1 (Tyco electronics or equivalent) Cable clamp: MTI-0002 (TOA ELECTRIC INDUSTRIAL CO., LTD.)	IP20
5)	Encoder cable	MR-JCCBL_M-H Cable length: 2, 5, 10, 20, 30, 40, 50 m		IP20 Long bending life
6)	Encoder cable	MR-ESCBL_M-L Cable length: 2, 5, 10, 20, 30 m	 For details, refer to section 13.3 (3).	IP20
7)	Encoder cable	MR-ESCBL_M-H Cable length: 2, 5, 10, 20, 30, 40, 50 m		IP20 Long bending life
8)	Encoder cable	MR-JHSCBL_M-L Cable length: 2, 5, 10, 20, 30 m	Connector: 10120-3000PE Shell kit: 10320-52F0-008 (3M or equivalent) Plug: D/MS3106B20-29S Cable clamp: D/MS3057-12A (DDK Ltd.)	IP20
9)	Encoder cable	MR-JHSCBL_M-H Cable length: 2, 5, 10, 20, 30, 40, 50 m		IP20 Long bending life
10)	Encoder cable	MR-ENCBL_M-H Cable length: 2, 5, 10, 20, 30, 40, 50 m	Connector: 10120-3000PE Shell kit:10320-52F0-008 (3M or equivalent) Plug: D/MS3106A20-29S(D190) Cable clamp: CE3057-12A-3-D Back shell: CE02-20BS-S-D (DDK Ltd.) 	IP65 Long bending life

13.3 Details on encoder cable

POINT

●To wire the connector on the CN2 side, securely connect the external conductor of the shield cable to the grand plate and install it to the connector shell.

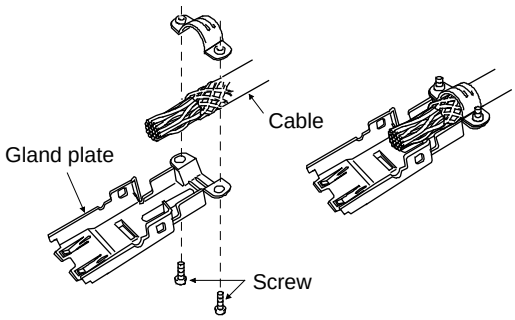

●The following encoder cables are a four wire system.
MR-EKCBL30M-L
MR-EKCBL30M-H
MR-EKCBL40M-H
MR-EKCBL50M-H
MR-ESCBL30M-L
MR-ESCBL30M-H
MR-ESCBL40M-H
MR-ESCBL50M-H
When using these encoder cables, set [Pr. 23] to "_ 1 _ _" and select "four wires system".
Incorrect setting will cause [AL.16 Encoder Error 1].

(1) MR-EKCBL_M-_
These cables are encoder cables for the HC-KFS, HC-MFS and HC-UFS 3000 r/min servo motors.
The numbers in the cable length field of the table indicate the symbol filling the underline "_" in the cable model. The cables of the lengths with the symbols are available.

Cable model	Cable length				Protection degree	Bending life	Application
	20 m	30 m	40 m	50 m			
MR-EKCBL_M-L	20	(Note) 30			IP20	Standard	For the HC-KFS, HC-MFS and HC-UFS 3000 r/min servo motors
MR-EKCBL_M-H	20	(Note) 30	(Note) 40	(Note) 50	IP20	Long bending life	

Note. Four wire system cable

(a) Servo amplifier/servo motor connection

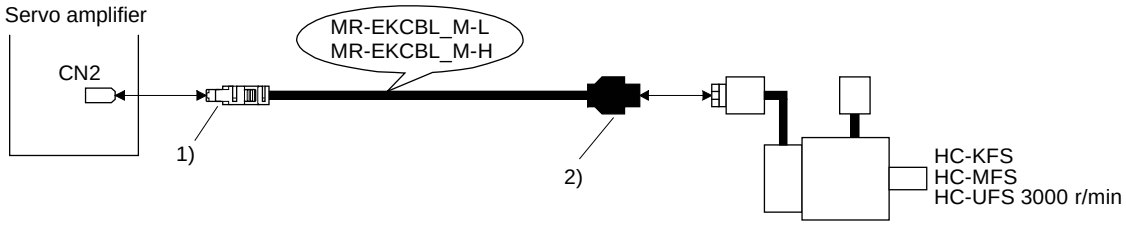

Cable model	1) CN2 connector	2) Encoder connector
MR-EKCBL_M-L MR-EKCBL_M-H	Receptacle: 36210-0100PL Shell kit: 36310-3200-008 (3M) Connector set: 54599-1019 (Molex) 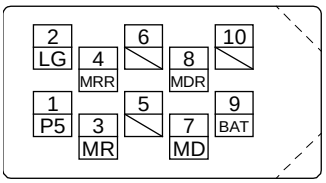 or 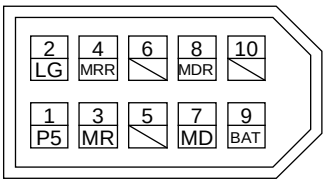 View seen from wiring side. (Note) View seen from wiring side. (Note) Note. Do not connect anything to the pins shown as ▨. Especially 10 pin is for manufacturer adjustment. Connection to other pins will cause the servo amplifier to operate abnormally.	Housing: 1-172161-9 Connector pin: 170359-1 Crimping tool: 91529-1 (Tyco electronics or equivalent) Cable clamp: MTI-0002 (TOA ELECTRIC INDUSTRIAL CO., LTD.) 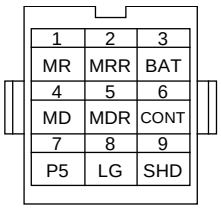 View seen from wiring side.

(b) Cable internal wiring diagram

MR-EKCBL20M-L

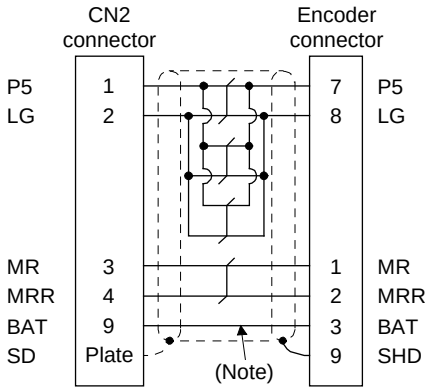

MR-EKCBL30M-L

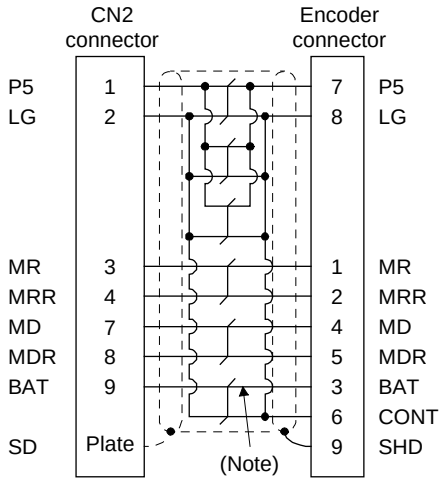

MR-EKCBL20M-H

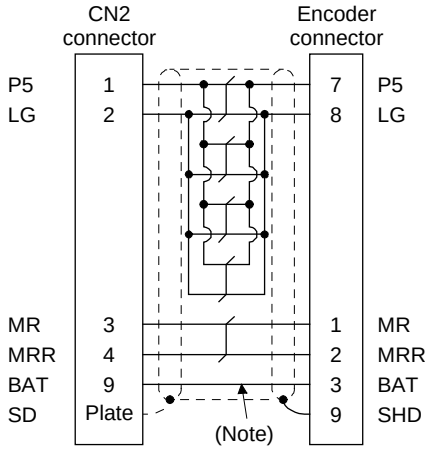

MR-EKCBL30M-H
MR-EKCBL40M-H
MR-EKCBL50M-H

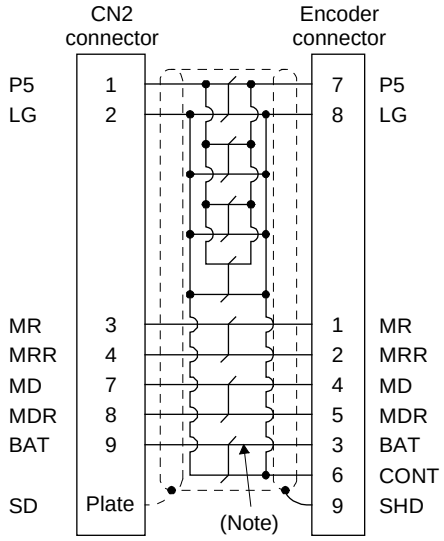

Note. When using the absolute position detection system, make sure to connect. When using the incremental system, it is not necessary to wire.

(2) MR-J3CH00 (or SC-J2SJ4ENC03M (manufactured by Mitsubishi Electric System & Service Co., Ltd.)
The servo amplifier and the servo motor cannot be connect only using this cable. Use it with following encoder cable.
MR-JCCBL_M-L
MR-JCCBL_M-H
MR-JHSCBL_M-L
MR-JHSCBL_M-H
MR-ENCBL_M-H

Cable model	Cable length	Protection degree	Bending life	Application
MR-J3CH00	0.2 m	IP20	Standard	For the HC-KFS, HC-MFS series and HC-UFS 3000 r/min servo motors Use with the MR-JCCBL_M-L/H.
				For the HC-SFS, HC-RFS, HC-LFS, HA-LFS series and HC-UFS 2000 r/min servo motors Use with the MR-JHCBL_M-L/H or MR-ENCBL_M-H.

(a) Servo amplifier/servo motor connection

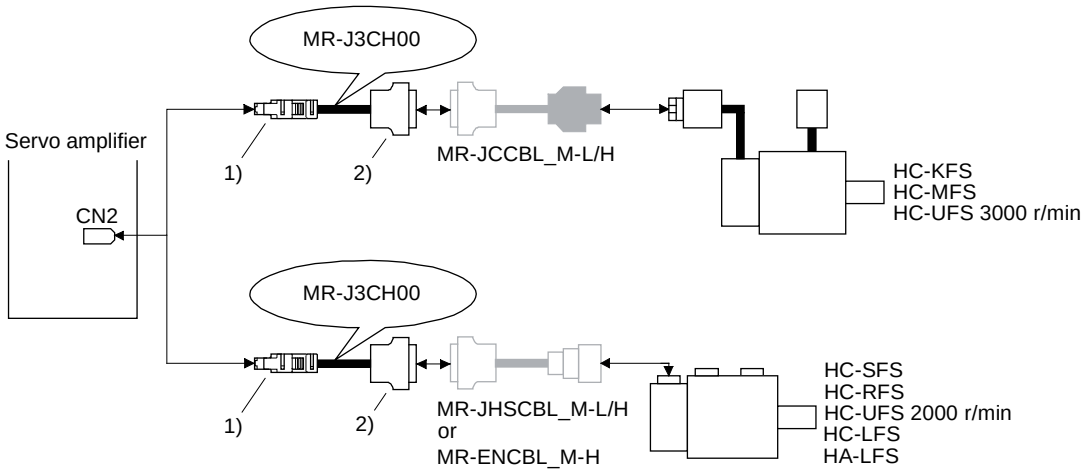

Cable model	1) CN2 connector	2) Relay connector
MR-J3CH00	Receptacle: 36210-0100PL Shell kit: 36310-3200-008 (3M) Connector set: 54599-1019 (Molex) 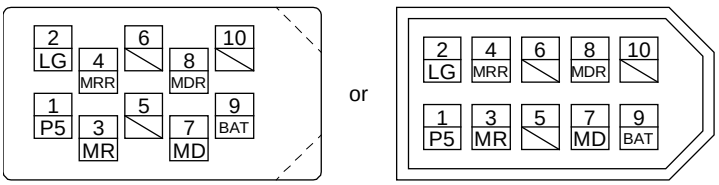 View seen from wiring side. (Note) Note. Do not connect anything to the pins shown as ▨ Especially 10 pin is for manufacturer adjustment. Connection to other pins will cause the servo amplifier to operate abnormally.	Connector: 10220-0200EL Shell kit: 10320-E2W0-008 (3M) 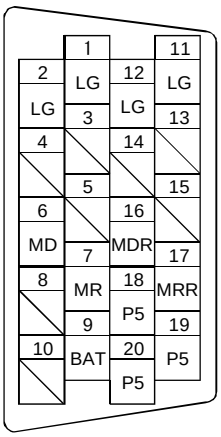 View seen from wiring side. (Note) Note. Do not connect anything to the pins shown as ▨.

(b) Cable internal wiring diagram

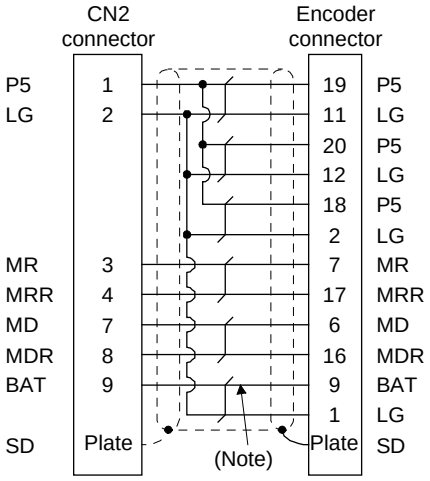

Note. When using the absolute position detection system, make sure to connect. When using the incremental system, it is not necessary to wire.

(3) MR-ESCBL_M-

These cables are encoder cables for the HC-SFS, HC-RFS, HC-LFS, HA-LFS series and the 2000 r/min servo motors. The numbers in the cable length field of the table indicate the symbol filling the underline "_" in the cable model. The cables of the lengths with the symbols are available.

Cable model	Cable length							Protection degree	Bending life	Application
	2 m	5 m	10 m	20 m	30 m	40 m	50 m			
MR-ESCBL_M-L	2	5	10	20	(Note) 30			IP20	Standard	For the HC-SFS, HC-RFS, HC-LFS, HA-LFS series and HC-UFS 2000 r/min servo motors
MR-ESCBL_M-H	2	5	10	20	(Note) 30	(Note) 40	(Note) 50	IP20	Long bending life	

Note. Four wire cable

(a) Servo amplifier/servo motor connection

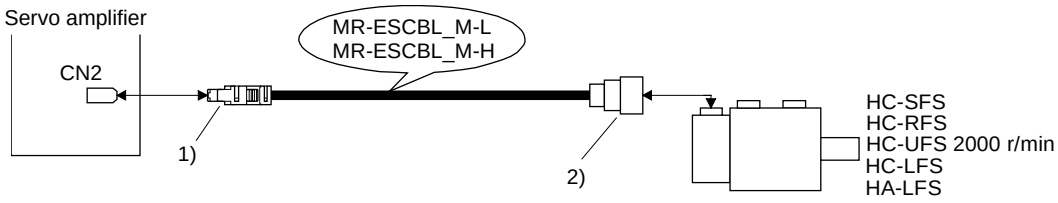

Cable model	1) CN2 connector	2) Encoder connector
MR-ESCBL_M-L MR-ESCBL_M-H	Receptacle: 36210-0100PL Shell kit: 36310-3200-008 (3M) Connector set: 54599-1019 (Molex)	Plug: D/MS3106B20-29S Cable clamp: D/MS3057-12A (DDK Ltd.)

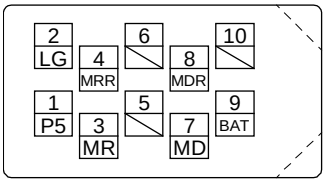

View seen from wiring side. (Note)

or

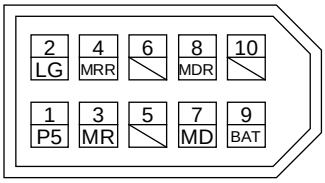

View seen from wiring side. (Note)

Note. Do not connect anything to the pins shown as ▧. Especially 10 pin is for manufacturer adjustment. Connection to other pins will cause the servo amplifier to operate abnormally.

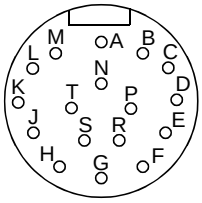

View seen from wiring side. (Note)

Pin	Signal
A	MD
B	MDR
C	MR
D	MRR
E	
F	BAT
G	
H	
J	

Pin	Signal
K	
L	
M	CONT
N	SHD
P	
R	LG
S	P5
T	

Note. Do not connect anything to the pins shown as ▧.

(b) Cable internal wiring diagram

MR-ESCBL2M-L
MR-ESCBL5M-L
MR-ESCBL10M-L

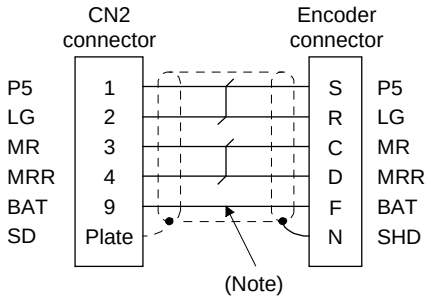

MR-ESCBL20M-L

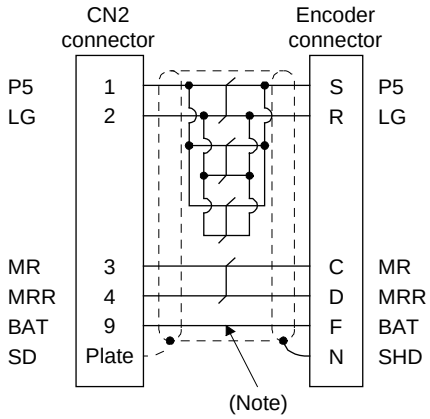

MR-ESCBL30M-L

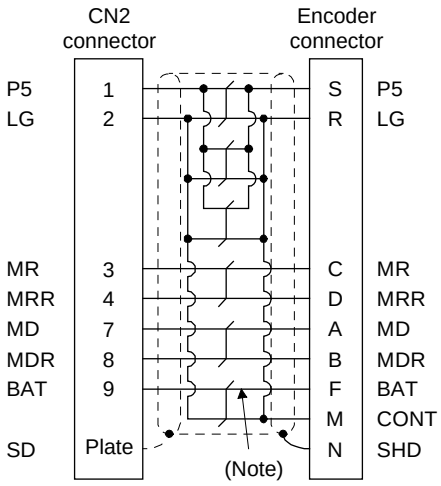

MR-ESCBL2M-H
MR-ESCBL5M-H
MR-ESCBL10M-H

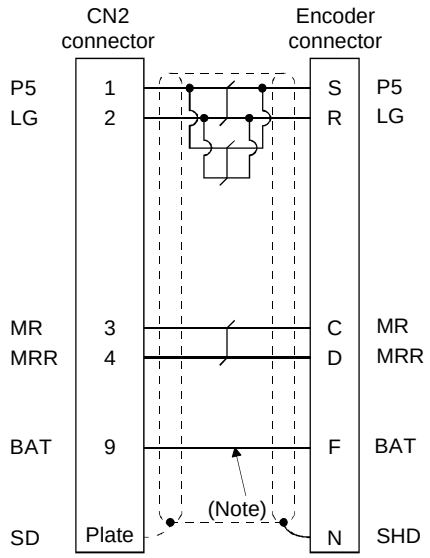

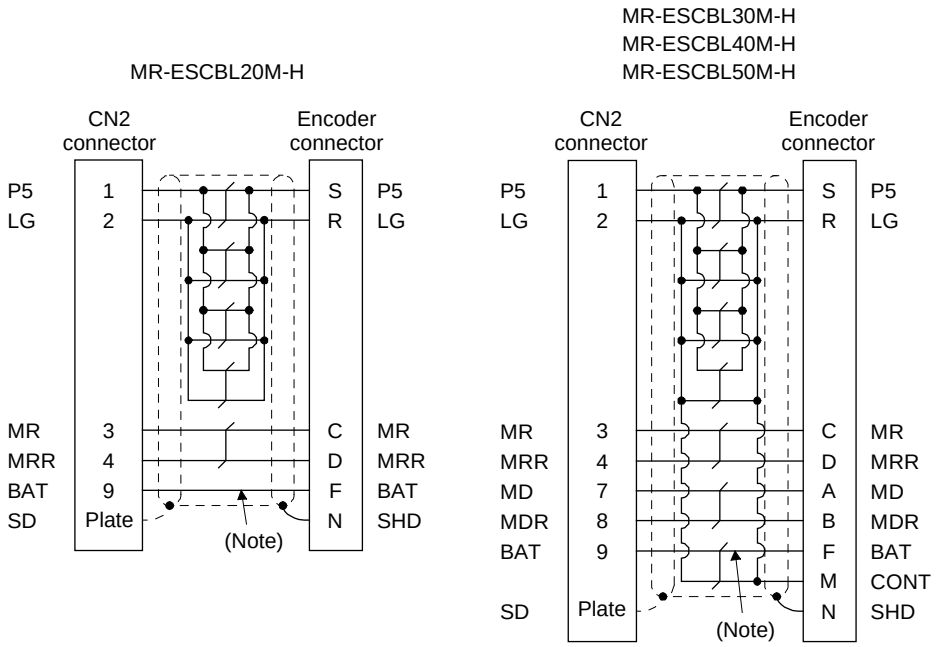

Note. When using the absolute position detection system, make sure to connect. When using the incremental system, it is not necessary to wire.

13.4 Large Capacity Servo Cable Connector Set

13.4.1 Cable connector set combination

When using the MR-J4-DU_B_-RJ020, cables and connector sets other than those shown below are the same as the MR-J4-_(-RJ). Refer to Section 11.1 in "MR-J4-_B_(-RJ) Servo Amplifier Instruction Manual".

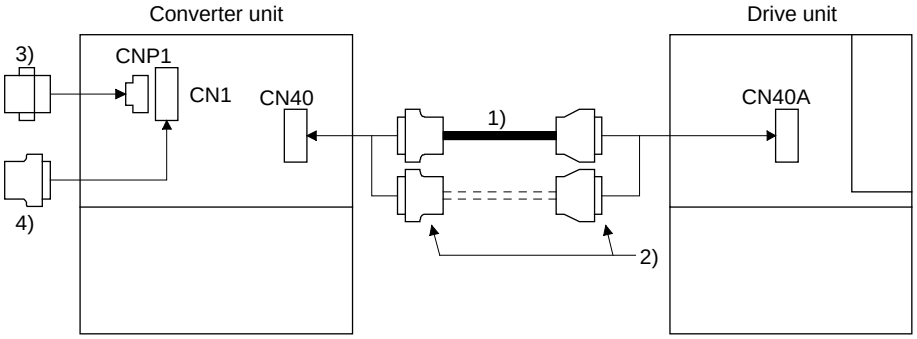

No.	Product name	Model	Description	Application
1)	Protection coordination cable	MR-J3CDL05M (Refer to Section 13.4.2.)	Connector: 10120-3000PE Shell kit: 10320-52F0-008 (3M or equivalent) Connector: PCR-S20FS+ Case: PCR-LS20LA1 (HONDA TSUSHIN KOGYO CO., LTD.)	
2)	Connector set	MR-J2CN1-A (Refer to section 13.4.2.)	Connector: 10120-3000PE Shell kit: 10320-52F0-008 (3M or equivalent) Connector: PCR-S20FS+ Shell kit: PCR-LS20LA1 (HONDA TSUSHIN KOGYO CO., LTD.)	
3)	Electromagnetic contactor wiring connector		Connector on the converter unit (Phoenix Contact) Socket: GFKC 2,5/ 2-STF-7,62	Supplied with the converter unit.
4)	Digital input/output connector		Connector on the converter unit (DDK Ltd.) Connector: 17JE23090-02(D8A)K11-CG	

13.4.2 MR-J3CDL05M (0.5 m) Protection Coordination Cable

⚠ Note	●When manufacturing a protection coordination cable, be careful not to wire improperly. Otherwise, it may cause unexpected motion.

This cable is intended to connect the converter unit and the drive unit.

(1) Internal wiring diagram

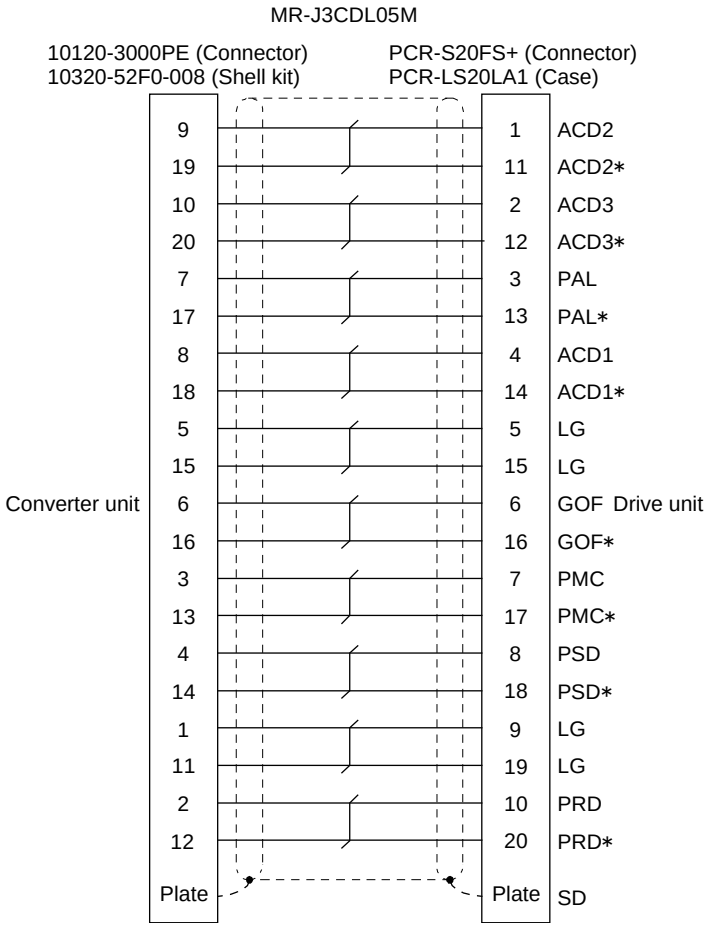

13.5 Regenerative Options

> ⚠ Note
> ●Regenerative options and servo amplifier must not be set in combination other than the specified combination.
> Doing so could cause a fire.

13.5.1 Combination and regenerative power

(1) 200/100 V class

(a) When using the HA-_FS/HC-_FS motors (J2S compatibility mode)

List of regenerative options

Servo amplifier model	Built-in regenerative resistor [W]	Permissible regenerative power of regenerative option [W] MR-RB								
		032 [40 Ω]	12 [40 Ω]	30 [13 Ω]	3N [9 Ω]	31 [6.7 Ω]	32 [40 Ω]	(Note 1) 50 [13 Ω]	(Note 1) 5N [9 Ω]	(Note 1) 51 [6.7 Ω]
MR-J4-10B(1)-RJ020		30								
MR-J4-20B(1)-RJ020	10	30	100							
MR-J4-40B(1)-RJ020	10	30	100							
MR-J4-60B-RJ020	10	30	100							
MR-J4-70B-RJ020	20	30	100				300			
MR-J4-100B-RJ020	20	30	100				300			
MR-J4-200B-RJ020	100			300				500		
MR-J4-350B-RJ020	100			300				500		
MR-J4-500B-RJ020	130			300				500		
MR-J4-700B-RJ020	170					300				500
MR-J4-11KB-RJ020										
MR-J4-15KB-RJ020										
MR-J4-22KB-RJ020										
MR-J4-DU30KB-RJ020										
MR-J4-DU37KB-RJ020										

Servo amplifier model	Built-in regenerative resistor [W]	(Note 2) MR-J2S standard accessories [External]	Permissible regenerative power of regenerative option [W] MR-RB							
			(Note 2) 5R [3.2 Ω]	(Note 2) 65 [8 Ω]	(Note 2) 66 [5 Ω]	(Note 2) 67 [4 Ω]	(Note 2) 9F [3 Ω]	(Note 2) 9T [2.5 Ω]	139 [1.3 Ω]	(Note 3) 137 [1.3 Ω]
MR-J4-10B(1)-RJ020										
MR-J4-20B(1)-RJ020	10									
MR-J4-40B(1)-RJ020	10									
MR-J4-60B-RJ020	10									
MR-J4-70B-RJ020	20									
MR-J4-100B-RJ020	20									
MR-J4-200B-RJ020	100									
MR-J4-350B-RJ020	100									
MR-J4-500B-RJ020	130									
MR-J4-700B-RJ020	170									
MR-J4-11KB-RJ020		GRZG400-2Ω × 4 500 (800)		500 (800)						
MR-J4-15KB-RJ020		GRZG400-1Ω × 5 850 (1300)			850 (1300)					
MR-J4-22KB-RJ020		GRZG400-0.8Ω × 5 850 (1300)				850 (1300)				
MR-J4-DU30KB-RJ020									1300	3900
MR-J4-DU37KB-RJ020									1300	3900

Note 1. Always install a cooling fan.
2. The values in the parentheses are applied to when a cooling fan is installed.
3. The value of MR-RB137 is the combined resistance of three units.

(b) When using the HG motor or the HA-_FS/HC-_FS motors (J4 mode)

List of regenerative options

Servo amplifier model	Built-in regenerative resistor [W]	Permissible regenerative power of regenerative option [W] MR-RB								
		032 [40 Ω]	12 [40 Ω]	30 [13 Ω]	3N [9 Ω]	31 [6.7 Ω]	32 [40 Ω]	(Note 1) 50 [13 Ω]	(Note 1) 5N [9 Ω]	(Note 1) 51 [6.7 Ω]
MR-J4-10B(1)-RJ020		30								
MR-J4-20B(1)-RJ020	10	30	100							
MR-J4-40B(1)-RJ020	10	30	100							
MR-J4-60B-RJ020	10	30	100							
MR-J4-70B-RJ020	20	30	100				300			
MR-J4-100B-RJ020	20	30	100				300			
MR-J4-200B-RJ020	100			300				500		
MR-J4-350B-RJ020	100				300				500	
MR-J4-500B-RJ020	130					300				500
MR-J4-700B-RJ020	170					300				500
MR-J4-11KB-RJ020										
MR-J4-15KB-RJ020										
MR-J4-22KB-RJ020										
MR-J4-DU30KB-RJ020										
MR-J4-DU37KB-RJ020										

Servo amplifier model	Built-in regenerative resistor [W]	(Note 2) Standard accessories [External]	Permissible regenerative power of regenerative option [W] MR-RB							
			(Note 2) 5R [3.2 Ω]	(Note 2) 65 [8 Ω]	(Note 2) 66 [5 Ω]	(Note 2) 67 [4 Ω]	(Note 2) 9F [3 Ω]	(Note 2) 9T [2.5 Ω]	139 [1.3 Ω]	(Note 5) 137 [1.3 Ω]
MR-J4-10B(1)-RJ020										
MR-J4-20B(1)-RJ020	10									
MR-J4-40B(1)-RJ020	10									
MR-J4-60B-RJ020	10									
MR-J4-70B-RJ020	20									
MR-J4-100B-RJ020	20									
MR-J4-200B-RJ020	100									
MR-J4-350B-RJ020	100									
MR-J4-500B-RJ020	130									
MR-J4-700B-RJ020	170									
MR-J4-11KB-RJ020		GRZG400-0.8Ω × 4 500 (800)	500 (800)							
MR-J4-15KB-RJ020		GRZG400-0.6Ω × 5 850 (1300)					850 (1300)			
MR-J4-22KB-RJ020		GRZG400-0.5Ω × 5 850 (1300)						850 (1300)		
MR-J4-DU30KB-RJ020									1300	3900
MR-J4-DU37KB-RJ020									1300	3900

Note 1. Always install a cooling fan.
2. The values in the parentheses are applied to when a cooling fan is installed.
3. When using a combination with an MR-J4 servo amplifier other than the standard one, contact your local sales office.
4. A backslash cell in the list shows a combination changed from "MR-J2S series".
5. The value of MR-RB137 is the combined resistance of three units connected in parallel.

Parameter settings (PA02 for MR-J4) may be required depending on the regenerative option model. For details, refer to "MR-J4-_B_-RJ020/MR-J4-DU_B_-RJ020/MR-CR55K_/MR-J4-T20 Servo Amplifier Instruction Manual".

(2) 400 V class

(a) When using the HA-_FS/HC-_FS motors (J2S compatibility mode)

List of regenerative options

Servo amplifier model	Built-in regenerative resistor [W]	Permissible regenerative power of regenerative option [W] MR-RB										
		1H-4 [82 Ω]	1L-4 [270 Ω]	(Note 1) 3M-4 [120 Ω]	(Note 1) 3H-4 [80 Ω]	(Note 1) 3G-4 [47 Ω]	(Note 1) 34-4 [26 Ω]	(Note 1) 3U-4 [22 Ω]	(Note 1) 5H-4 [80 Ω]	(Note 1) 5G-4 [47 Ω]	(Note 1) 54-4 [26 Ω]	(Note 1) 5U-4 [22 Ω]
MR-J4-60B4-RJ020	15 (Note 4)	100	100	300								
MR-J4-100B4-RJ020	15 (Note 4)	100		300								
MR-J4-200B4-RJ020	100				300				500			
MR-J4-350B4-RJ020	100					300				500		
MR-J4-500B4-RJ020	130					300				500		
MR-J4-700B4-RJ020	170						300				500	
MR-J4-11KB4-RJ020												
MR-J4-15KB4-RJ020												
MR-J4-22KB4-RJ020												
MR-J4-DU30KB4-RJ020												
MR-J4-DU37KB4-RJ020												
MR-J4-DU45KB4-RJ020												
MR-J4-DU55KB4-RJ020												

Servo amplifier model	Built-in regenerative resistor [W]	(Note 2) MR-J2S standard accessories [External]	Permissible regenerative power of regenerative option [W] MR-RB					
			(Note 2) 5K-4 [10 Ω]	(Note 2) 6B-4 [20 Ω]	(Note 2) 60-4 [12.5 Ω]	(Note 2) 6K-4 [10 Ω]	136-4 [5 Ω]	(Note 3) 138-4 [5 Ω]
MR-J4-60B4-RJ020	15 (Note 4)							
MR-J4-100B4-RJ020	15 (Note 4)							
MR-J4-200B4-RJ020	100							
MR-J4-350B4-RJ020	100							
MR-J4-500B4-RJ020	130							
MR-J4-700B4-RJ020	170							
MR-J4-11KB4-RJ020		GRZG400-5Ω × 4 500 (800)		500 (800)				
MR-J4-15KB4-RJ020		GRZG400-2.5Ω × 5 850 (1300)			850 (1300)			
MR-J4-22KB4-RJ020		GRZG400-2Ω × 5 850 (1300)				850 (1300)		
MR-J4-DU30KB4-RJ020							1300	3900
MR-J4-DU37KB4-RJ020							1300	3900
MR-J4-DU45KB4-RJ020							1300	3900
MR-J4-DU55KB4-RJ020							1300	3900

Note 1. Always install a cooling fan.
2. The values in the parentheses are applied to when a cooling fan is installed.
3. The value of MR-RB138-4 is the combined resistance of three units.
4. The capacity of the built-in regenerative resistor is small for the MR-J2S servo amplifier.
Consider based on regenerative load ratio.

(b) When using the HG motor or the HA-_FS/HC-_FS motors (J4 mode)

List of regenerative options

Servo amplifier model	Built-in regenerative resistor [W]	Permissible regenerative power of regenerative option [W] MR-RB										
		1H-4 [82 Ω]	1L-4 [270 Ω]	(Note 1) 3M-4 [120 Ω]	(Note 1) 3H-4 [80 Ω]	(Note 1) 3G-4 [47 Ω]	(Note 1) 34-4 [26 Ω]	(Note 1) 3U-4 [22 Ω]	(Note 1) 5H-4 [80 Ω]	(Note 1) 5G-4 [47 Ω]	(Note 1) 54-4 [26 Ω]	(Note 1) 5U-4 [22 Ω]
MR-J4-60B4-RJ020	15 (Note 5)	100		300								
MR-J4-100B4-RJ020	15 (Note 5)	100		300								
MR-J4-200B4-RJ020	100					300				500		
MR-J4-350B4-RJ020	100					300				500		
MR-J4-500B4-RJ020	130						300				500	
MR-J4-700B4-RJ020	170							500				500
MR-J4-11KB4-RJ020												
MR-J4-15KB4-RJ020												
MR-J4-22KB4-RJ020												
MR-J4-DU30KB4-RJ020												
MR-J4-DU37KB4-RJ020												
MR-J4-DU45KB4-RJ020												
MR-J4-DU55KB4-RJ020												

Servo amplifier model	Built-in regenerative resistor [W]	(Note 2) Standard accessories [External]	Permissible regenerative power of regenerative option [W] MR-RB					
			(Note 2) 5K-4 [10 Ω]	(Note 2) 6B-4 [20 Ω]	(Note 2) 60-4 [12.5 Ω]	(Note 2) 6K-4 [10 Ω]	137-4 [4 Ω]	(Note 4) 13V-4 [4 Ω]
MR-J4-60B4-RJ020	15 (Note 5)							
MR-J4-100B4-RJ020	15 (Note 5)							
MR-J4-200B4-RJ020	100							
MR-J4-350B4-RJ020	100							
MR-J4-500B4-RJ020	130							
MR-J4-700B4-RJ020	170							
MR-J4-11KB4-RJ020		GRZG400-2.5Ω × 4 500 (800)	500 (800)					
MR-J4-15KB4-RJ020		GRZG400-2Ω × 5 850 (1300)				850 (1300)		
MR-J4-22KB4-RJ020		GRZG400-2Ω × 5 850 (1300)				850 (1300)		
MR-J4-DU30KB4-RJ020							1300	3900
MR-J4-DU37KB4-RJ020							1300	3900
MR-J4-DU45KB4-RJ020							1300	3900
MR-J4-DU55KB4-RJ020							1300	3900

Note
1. Always install a cooling fan.
2. The values in the parentheses are applied to when a cooling fan is installed.
3. When using a combination with an MR-J4 servo amplifier other than the standard one, contact your local sales office.
4. The value of MR-RB13V-4 is a resultant resistance of three units connected.
5. The capacity of the built-in regenerative resistor is small for the MR-J2S servo amplifier.
   Consider based on regenerative load ratio.
6. Changed items are shown with shading.
7. Parameter settings (PA02 for MR-J4) may be required depending on the regenerative option model. For details, refer to "MR-J4-_B_-RJ020 Servo Amplifier Instruction Manual (SH(NA)030125)".

13.5.2 Regenerative option selection

Select by the following method when regeneration is continuously generated on the vertical axis or when a regenerative option is selected in detail.

(1) Calculation of regenerative energy

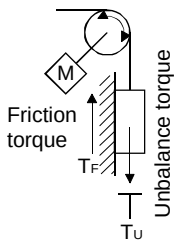

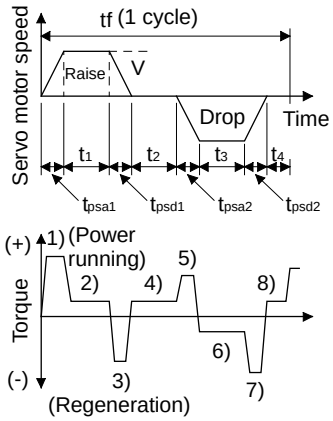

Formula to calculate torque and energy during operation

Regenerative power	Torque T [N•m] imposed on servo motor	Energy E [J]
1)	$T_1 = \frac{(J_L/\eta + J_M) \cdot V}{9.55 \cdot 10^4} \cdot \frac{1}{t_{psa1}} + T_U + T_F$	$E_1 = \frac{0.1047}{2} \cdot V \cdot T_1 \cdot t_{psa1}$
2)	$T_2 = T_U + T_F$	$E_2 = 0.1047 \cdot V \cdot T_2 \cdot t_1$
3)	$T_3 = \frac{-(J_L \cdot \eta + J_M) \cdot V}{9.55 \cdot 10^4} \cdot \frac{1}{t_{psa2}} + T_U + T_F$	$E_3 = \frac{0.1047}{2} \cdot V \cdot T_3 \cdot t_{psa2}$
4), 8)	T_4, $T_8 = T_U$	E_4, E_8 0 (no regeneration)
5)	$T_5 = \frac{(J_L/\eta + J_M) \cdot V}{9.55 \cdot 10^4} \cdot \frac{1}{t_{psd2}} - T_U + T_F$	$E_5 = \frac{0.1047}{2} \cdot V \cdot T_5 \cdot t_{psd2}$
6)	$T_6 = -T_U + T_F$	$E_6 = 0.1047 \cdot V \cdot T_6 \cdot t_3$
7)	$T_7 = \frac{-(J_L \cdot \eta + J_M) \cdot V}{9.55 \cdot 10^4} \cdot \frac{1}{t_{psd2}} - T_U + T_F$	$E_7 = \frac{0.1047}{2} \cdot V \cdot T_7 \cdot t_{psd2}$

Determine the absolute value (Es) of the total sum of negative energy from the calculation results 1) to 8).

(2) Loss of the servo motor and the servo amplifier during regeneration

The efficiency of the servo motor and the servo amplifier during regeneration is shown below.

Servo amplifier	Motor inverse efficiency [%]	C charge [J]
MR-J4-10B-RJ020	55	9
MR-J4-20B-RJ020	70	9
MR-J4-40B-RJ020	85	11
MR-J4-60B-RJ020	85	11
MR-J4-70B-RJ020	80	18
MR-J4-100B-RJ020	80	18
MR-J4-200B-RJ020	85	36
MR-J4-350B-RJ020	85	40
MR-J4-500B-RJ020	90	45
MR-J4-700B-RJ020	90	70
MR-J4-11KB-RJ020	90	120
MR-J4-15KB-RJ020	90	170
MR-J4-22KB-RJ020	90	250

Servo amplifier	Motor inverse efficiency [%]	C charge [J]
MR-J4-60B4-RJ020	85	12
MR-J4-100B4-RJ020	80	12
MR-J4-200B4-RJ020	85	25
MR-J4-350B4-RJ020	85	43
MR-J4-500B4-RJ020	90	45
MR-J4-700B4-RJ020	90	70
MR-J4-11KB4-RJ020	90	120
MR-J4-15KB4-RJ020	90	170
MR-J4-22KB4-RJ020	90	250
MR-J4-10B1-RJ020	55	4
MR-J4-20B1-RJ020	75	4
MR-J4-40B1-RJ020	85	10

Converter unit	Drive unit	Motor inverse efficiency [%]	C charge [J]
MR-CR55K	MR-J4-DU30KB-RJ020	90	450
	MR-J4-DU37KB-RJ020	90	450
MR-CR55K-4	MR-J4-DU30KB4-RJ020	90	450
	MR-J4-DU37KB4-RJ020	90	450
	MR-J4-DU45KB4-RJ020	90	450
	MR-J4-DU55KB4-RJ020	90	450

Inverse efficiency (η): Efficiency including part of the servo motor and the servo amplifier when generating the rated (regenerative) torque at the rated rotation speed. Provide a greater allowance by about 10% as the efficiency varies depending on the rotation speed or generating torque.

C charge (Ec): Energy which charges the electrolytic capacitor within the servo amplifier.

Energy consumed by the regenerative option can be calculated from the value of the total of regenerative energy multiplied by inverse efficiency from which C charge is subtracted.

$ER\ [J] = \eta \cdot Es - Ec$

For energy consumption of regenerative option, select the desired option by calculating based on one operating cycle fh [s].

$PR\ [W] = ER/tf$

13.5.3 Parameter setting

[Setting for 22 kW or less]

Set [Pr. 2] adjusting to the regenerative option to be used.

[Pr. 2]

0	0		

00: The regenerative option is not used
- ・For servo amplifier of 100W, regenerative resistor is not used.
- ・For servo amplifier of 0.2 kW to 7 kW, built-in regenerative resistor is used.
- ・The supplied regenerative resistor or regenerative option is used in the servo amplifier at 11 kW to 22 kW.

01: FR-RC/FR-RC-H/FR-CV/FR-CV-H/FR-BU2/FR-BU2-H
05: MR-RB32
08: MR-RB30
09: MR-RB50 (Cooling fan is needed)
0B: MR-RB31
0C: MR-RB51 (Cooling fan is needed)
0E: When increasing the capabilities by using a cooling fan to cool the supplied regeneration resistor with the servo amplifier of 11 kW to 22 kW.
10: MR-RB032
11: MR-RB12
13: MR-RB5E
14: MR-RB5E (Cooling fan is needed)
17: MR-RB9F
18: MR-RB9F (Cooling fan is needed)
20: MR-RB3N
21: MR-RB5N (Cooling fan is needed)
23: MR-RB5R
24: 24: MR-RB5R (Cooling fan is needed)
25: MR-RB9P
26: MR-RB9P (Cooling fan is needed)
27: MR-RB9T
28: MR-RB9T (Cooling fan is needed)
80: MR-RB3H-4 (Cooling fan is needed)
81: MR-RB5H-4 (Cooling fan is needed)
82: MR-RB3G-4 (Cooling fan is needed)
83: MR-RB5G-4 (Cooling fan is needed)
84: MR-RB34-4 (Cooling fan is needed)
85: MR-RB54-4 (Cooling fan is needed)
86: MR-RB1L-4
87: MR-RB3M-4 (Cooling fan is needed)
90: MR-RB1H-4
94: MR-RB5K-4
95: MR-RB5K-4 (Cooling fan is needed)
96: MR-RB6B-4
97: MR-RB6B-4 (Cooling fan is needed)
98: MR-RB6K-4
99: MR-RB6K-4 (Cooling fan is needed)
9A: MR-RB60-4
9B: MR-RB60-4 (Cooling fan is needed)
9C: MR-RB3U-4 (Cooling fan is needed)
9D: MR-RB5U-4 (Cooling fan is needed)

[Setting for 30 kW or more]

> **POINT**
>
> ●Regenerative options cannot be connected to the drive unit. [Pr. PA02] in the drive unit must be set to "_ _ 0 0" (do not use regenerative options) or "_ _01". Setting other than the above will cause [AL. 37 Parameter error].

Set [Pr. PA01] for the converter unit, adjusting to the regenerative option to be used.

[Pr. PA01]

0	0		

Regenerative option selection

00: Not used	12: MR-RB138-4 (3 units)
01: MR-RB139	13: MR-RB137-4
02: MR-RB137 (3 units)	14: MR-RB13V-4 (3 units)
11: MR-RB136-4	

13.5.4 Connecting regenerative options

POINT
●When using MR-RB50, MR-RB51, MR-RB3M-4, MR-RB3G-4, MR-RB5G-4, MR-RB34-4, MR-RB54-4, MR-RB3H-4 and MR-RB5H-4, cooling using the cooling fan is required. You should provide the cooling fan. ●Refer to Chapter 7 of this document for wire sizes used for wiring.

Regenerative options may be heated to 100 °C or more above the ambient temperature. Carefully determine the position of the radiation, installation position, wiring path, etc. Use flame-retardant wire for wiring or apply flame retardant treatment by avoiding contact between the wires and the regenerative option. Be sure to use twisted wires when connecting to the servo amplifier and keep the wiring distance to no longer than 5 m.

(1) MR-J4-500B-RJ020 or less / MR-J4-350B4-RJ020 or less
Be sure to remove wiring between P+and D and then install the regenerative option between P+ and C. The G3 and the G4 terminals are thermal sensors. Abnormal overheating of the regenerative option causes the contact between G3 and G4 to open.

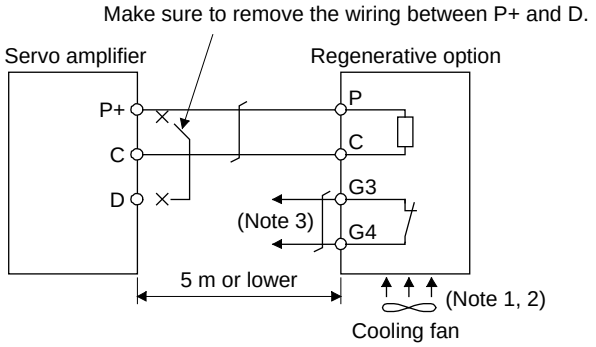

Note 1. When using MR-RB50, MR-RB3M-4, MR-RB3G-4, MRRB5G-4, MR-RB3H-4 and MR-RB5H-4, perform forced cooling using the cooling fan (1.0 m³/min or more, 92 mm square).

2. Provide forced cooling for MR-RB30, MR-RB31 and MR-RB32 using the cooling fan (1.0 m³/min or more, 92 mm square) when the ambient temperature of the regenerative option is 55 °C and regenerative load ratio exceeds 60%. When the ambient temperature is at or below 35 °C, the cooling fan is not required. (In the figure below, it is necessary to cool with the cooling fan required when the ambient temperature and load ratio are within the shaded area.)

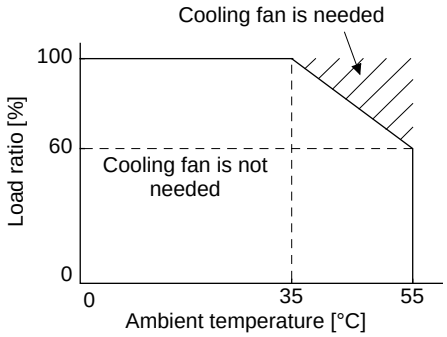

3. Configure sequence of shutting off the electromagnetic contactor when abnormal heating is caused.
Specifications for contact between G3 and G4:
Maximum voltage: 120 V AC/DC
Maximum current: 0.5 A/4.8 V DC
Maximum capacity: 2.4 VA

(2) MR-J4-700B-RJ020/MR-J4-500B4-RJ020/MR-J4-700B4-RJ020

Remove the wiring (between P+ and C) for the regenerative resistor built into the servo amplifier and install the regenerative option between P+ and C. The G3 and the G4 terminals are thermal sensors. Abnormal overheating of the regenerative option causes the contact between G3 and G4 to open.

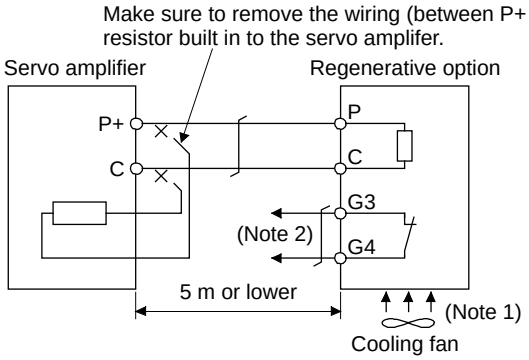

Note 1. When using MR-RB51, MR-RB34-4, MR-RB54-4, MR-RB3G-4 and MR-RB5G-4, perform forced cooling using the cooling fan (1.0 m³/min or more, 92 mm square).

2. Configure sequence of shutting off the electromagnetic contactor when abnormal heating is caused.

Specifications for contacts between G3 and G4

Maximum voltage: 120 V AC/DC

Maximum current: 0.5 A/4.8 V DC

Maximum capacity: 2.4 VA

When you use the regenerative option, remove the wiring (between P+ and C) for the regenerative resistor built into the servo amplifier, place back to back as shown in the diagram below and secure to the frame using the supplied screw.

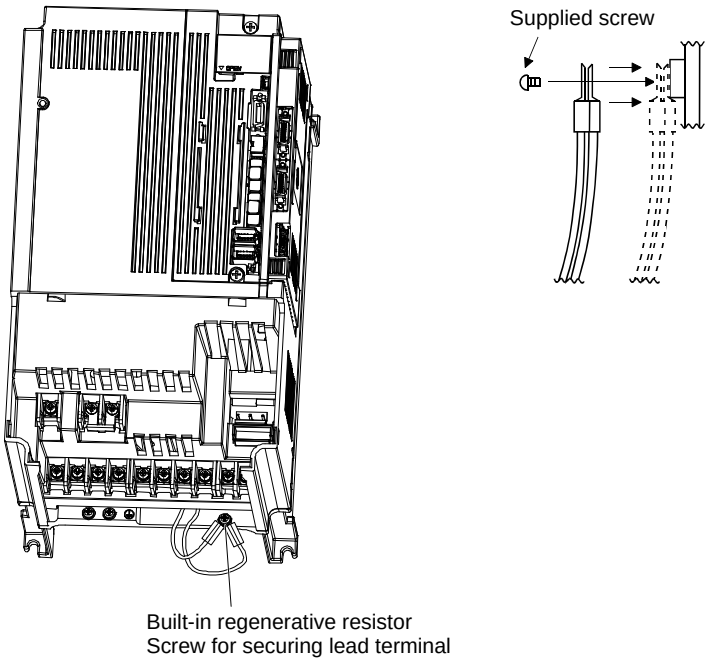

(3) MR-J4-11KB-RJ020 to MR-J4-22KB-RJ020 and MR-J4-11KB4-RJ020 to MR-J4-22KB4-RJ020 (when the regenerative resistor that comes standard with the servo amplifier is used.)

⚠ Note	●Since the regenerative resistor that comes with the servo amplifier of 11 kW to 22 kW has no protective cover, be careful of the following items. • The surface of the part is a resistor and it becomes very hot. Touching it could cause burns. • The capacitor of the servo amplifier is charged for a while even after power is disconnected. Touching it may cause electric shock.

When you use regenerative resistors that come standard with the servo amplifier, be sure to connect the specified number (4 or 5 pcs.) in series. Parallel connection or use of regenerative resistors less than the specified number could failure of the servo amplifier and/or burnout of regenerative resistors.
When regenerative resistors are installed side-by-side, keep a distance of 70 mm or more between resistors. Cooling the resistors with cooling fans (1.0 ㎥/min or more, 92 mm square x 2 pcs.) enhances regenerative power. In this case, set [Pr. 2] to "_ _ 0 E".

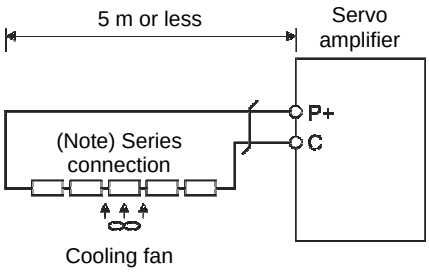

Note. The number of series connections varies depending on the type of resistors. Thermal sensors are not built into the supplied regenerative resistors. In the case of a failure of the regenerative circuit, the possible cause is abnormal overheating of resistors. Therefore, you should install thermal sensors near resistors and install the protection circuit that shuts off the main circuit power in the case of abnormal overheating. The detection level of the thermal sensor varies depending on the method used for installing resistors. Install thermal sensors in optimal locations according to your design standard or use regenerative options with built-in thermal sensors (MR-RB5E, MR-RB5R, MR-RB9P, MR-RB9F, MR-RB9T, MR-RB5K-4, MR-RB6B-4, MR-RB60-4 or MR-RB6K-4) .

Servo amplifier	Regenerative resistor	Regenerative power [W]		Resistance value [Ω]	Number
		During normal use	During cooling		
MR-J4-11KB-RJ020	GRZG400-0.8Ω	500	800	3.2	4
MR-J4-15KB-RJ020	GRZG400-0.6Ω	850	1300	3	5
MR-J4-22KB-RJ020	GRZG400-0.5Ω			2.5	
MR-J4-11KB4-RJ020	GRZG400-2.5Ω	500	800	10	4
MR-J4-15KB4-RJ020 MR-J4-22KB4-RJ020	GRZG400-2Ω	850	1300	10	5

(4) MR-J4-11KB-RZ020 to MR-J4-22KB-RZ020 and MR-J4-11KB4-RZ020 to MR-J4-22KB4-RZ020 (when regenerative options are used.)
MR-J4-11KB-RZ020 to MR-J4-22KB-RZ020 and MR-J4-11KB4-RZ020 to MR-J4-22KB4-RZ020 do not come with regenerative resistors. When you use these servo amplifiers, be sure to use MR-RB5E, MR-RB5R, MR-RB9P, MR-RB9F, MR-RB9T, MR-RB5K-4, MR-RB6B-4, MR-RB60-4 or MR-RB6K-4.
Cooling with a cooling fan enhances regenerative power. The G3 and the G4 terminals are thermal sensors. Abnormal overheating of the regenerative option causes the contact between G3 and G4 to open.

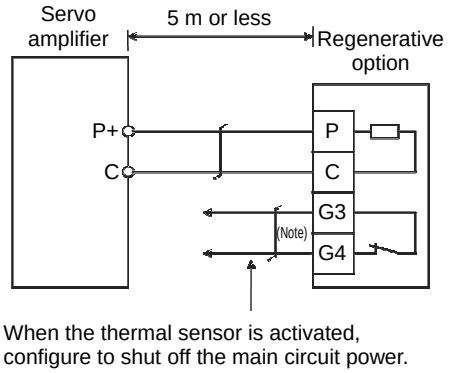

Note. Specifications for contacts between G3 and G4
Maximum voltage: 120 V AC/DC
Maximum current: 0.5 A/4.8 V DC
Maximum capacity: 2.4 VA

Servo amplifier	Regenerative options	Resistance value [Ω]	Regenerative power [W]	
			Without cooling fan	With cooling fan
MR-J4-11KB-RZ020	MR-RB5E	6	500	800
	MR-RB5R	3.2		
MR-J4-15KB-RZ020	MR-RB9P	4.5	850	1300
	MR-RB9F	3		
MR-J4-22KB-RZ020	MR-RB9T	2.5	850	1300
MR-J4-11KB4-RZ020	MR-RB5K-4	10	500	800
	MR-RB6B-4	20		
MR-J4-15KB4-RZ020	MR-RB60-4	12.5	850	1300
	MR-RB6K-4	10		
MR-J4-22KB4-RZ020				

When you use a cooling fan, install it in the mounting hole at the bottom of the regenerative option.

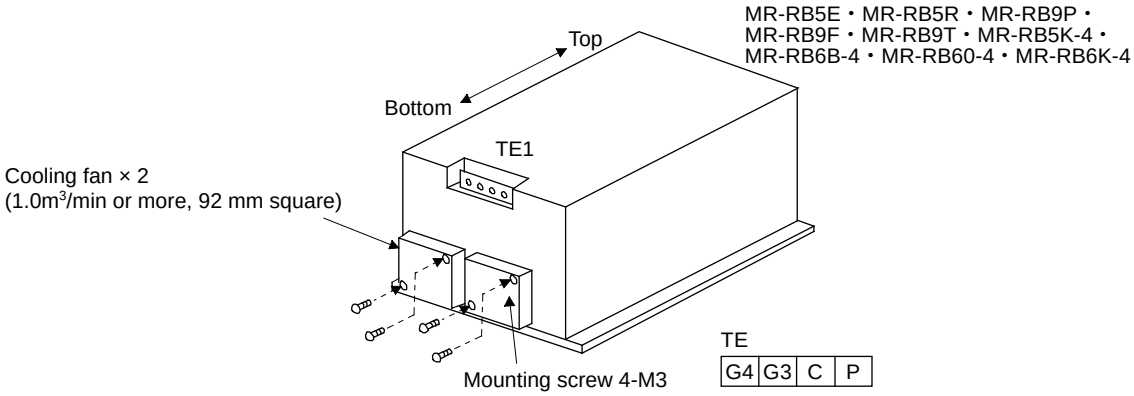

(5) MR-CR55K_(when regenerative options are used)
Make sure to supply power (shown in the following table) to the cooling fan.

Table: Appendix 1 Cooling Fan

Item	200 V class	400 V class
Model	MR-RB137/MR-RB139	MR-RB137-4/MR-RB13V-4
Voltage/Frequency	1-phase 198 V AC to 242 V AC, 50 Hz/60 Hz	1-phase 380 V AC to 480 V AC, 50 Hz/60 Hz
Consumed power [W]	20 (50 Hz)/18 (60 Hz)	20 (50 Hz)/18 (60 Hz)

Regenerative options may be heated to 100 °C or more above the ambient temperature. Carefully determine the position of the radiation, installation position, wiring path, etc. Use flame-retardant wire for wiring or apply flame retardant treatment by avoiding contact between the wires and the regenerative option. The G3 and the G4 terminals are thermal protectors. Abnormal overheating of the regenerative option causes the contact between G3 and G4 to open.
Be sure to use twisted wires when connecting to the converter unit and keep the wiring distance to no longer than 5 m.

1) MR-RB139/MR-RB137-4

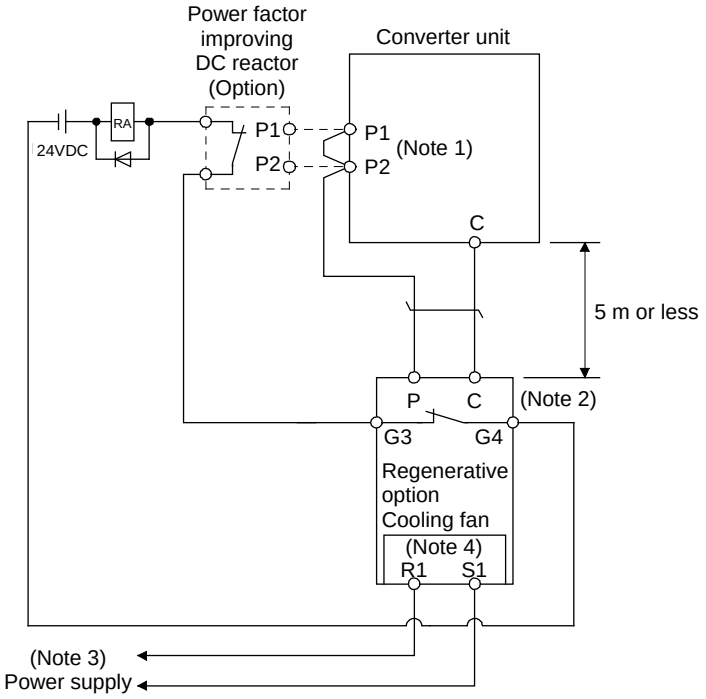

Note 1. When using the power factor improving DC reactor, remove the short bar across P1 and P2.
2. Specifications for contacts between G3 and G4
Maximum voltage: 120 V AC/DC
Maximum current: 0.5 A/4.8 V DC
Maximum capacity 2.4 VA
3. For the power specifications for the cooling fan, refer to the table in Appendix 1.
4. For MR-RB137-4, "R1" becomes "R400" and "S1" becomes "S400".

2) MR-RB137/MR-RB13V-4

POINT
●For MR-RB137 and MR-RB13V-4, three units are required for each converter unit. For MR-RB137 and MR-RB13V-4, purchase three units.

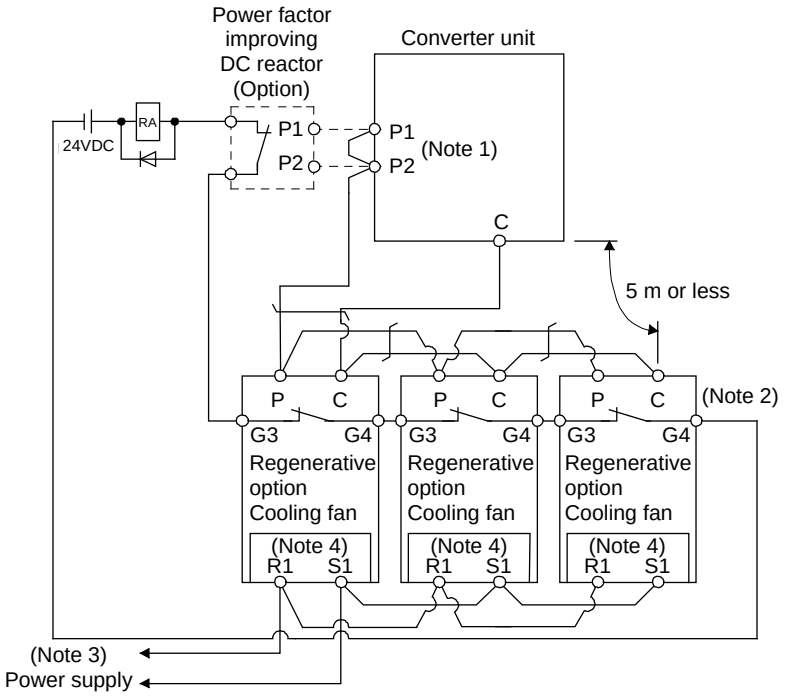

Note 1. When using the power factor improving DC reactor, remove the short bar across P1 and P2.
2. Specifications for contact between G3 and G4
Maximum voltage: 120 V AC/DC
Maximum current: 0.5 A/4.8 V DC
Maximum capacity: 2.4 VA
3. For the power specifications for the cooling fan, refer to the table in Appendix 1.
4. For MR-RB13V-4, "R1" becomes "R400" and "S1" becomes "S400".

13.6 External Dynamic Brake

The list of external dynamic brakes with a large capacity of 30 kW or more (combination) is shown below.

Name	Compatible				
	MR-J4-B		MR-J2S-B	MR-J4-B-RJ020	
	HG motor Drive	HA-_FS/HC-_FS motor Drive	HA-_FS/HC-_FS motor Drive	HG motor Drive	HA-_FS/HC-_FS motor Drive
DBU-37K	Not compatible	Compatible	Compatible	Not compatible	Compatible
DBU-37K-R1	Compatible	Not compatible	Not compatible	Compatible	Not compatible
DBU-55K-4	Not compatible	Compatible	Compatible	Not compatible	Compatible
DBU-55K-4-R5	Compatible	Not compatible	Not compatible	Compatible	Not compatible

For details, refer to "Part 5: Review on Replacement of MR-J2S-30kW or More with MR-J4-DU_".

14. SETTING PARAMETERS ADDED ON MR-J4-_B_-RJ020 SERVO AMPLIFIER

This section explains the procedure for setting parameters added on the MR-J4-_B_-RJ020 servo amplifier from the motion controller (in J2S Compatibility Mode).

14.1 Combination of Motion Controller and Peripheral Software

Series	Motion controller model	Motion controller peripheral software
Q series	Q172CPU(N) Q173CPU(N)	MELSOFT MT Works2 (SW1DNC-MTW2-E) MT Developer (SW6RNC-GSVE)
A series	A171SHCPU(N) A172SHCPU(N) A173UHCPU A273UHCPU	SW3RNC-GSVE

14.2 Parameter Setting Procedure

14.2.1 For MELSOFT MT Works2

(1) Display the "Servo parameter" window.

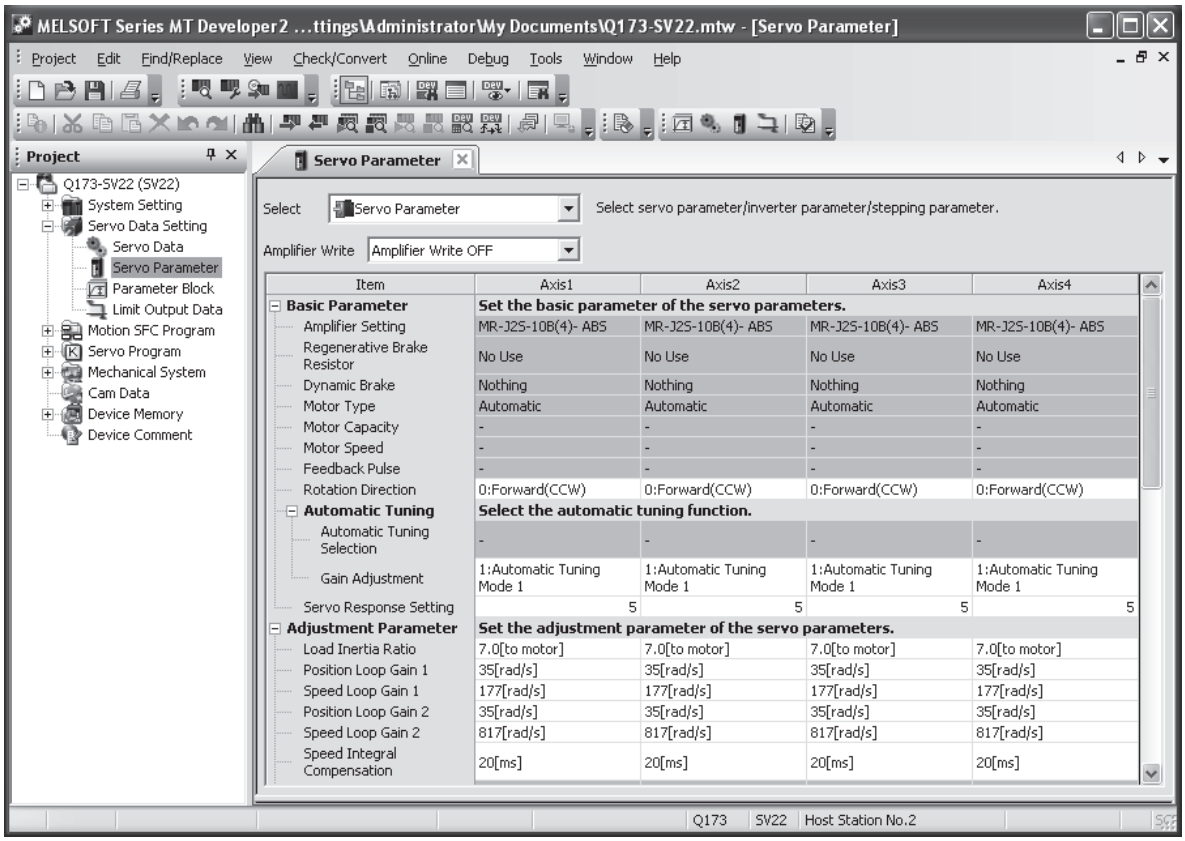

(2) Double-click the setting field "1 to 75" under special parameters "Parameter No." and display the "Servo special parameter setting" dialog.

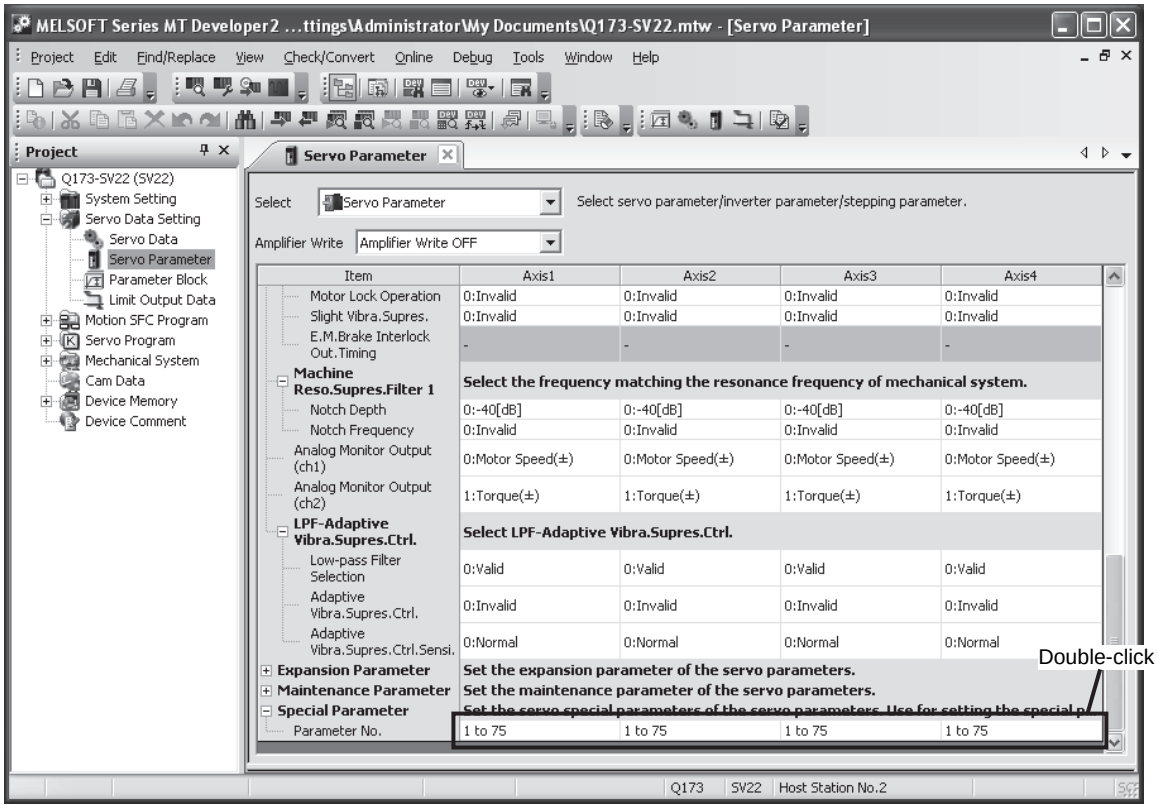

(3) Change the parameter setting value.
After changing the setting value of the applicable parameter, click "OK" so that the setting value is reflected.

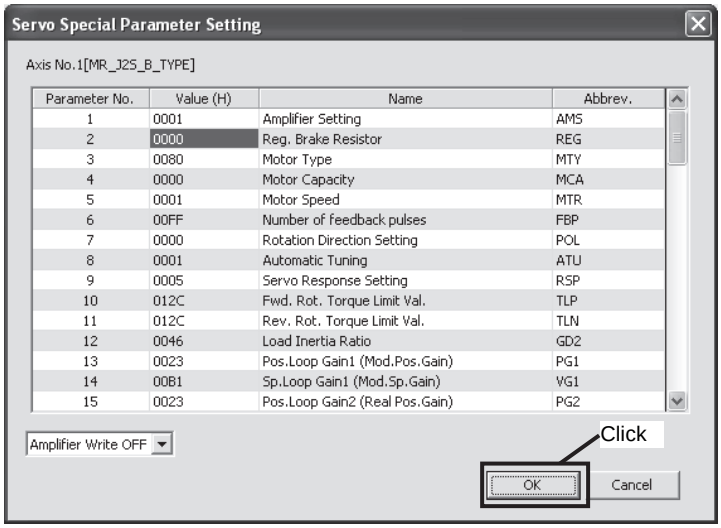

Examples of changes of parameter setting values are shown below.

(a) Change of [Pr. 2 regenerative resistor] (hexadecimal parameter)
To change the setting value to "0020", enter "0020" as it is.

(b) Change of [Pr. 12 load inertia moment ratio relative to the servo motor (load inertia ratio) (decimal parameter)
To change the setting value to "7.0", enter "0046" which is the value resulted from converting "70" to the hexadecimal number.

(c) Change of [Pr. 39 Electronic dynamic brake operating time] (decimal parameter)
To change the setting value to "10000", enter "2710" which is the value resulted from converting "10000" to the hexadecimal number.

(4) Write the changed parameter in communication. Clicking "Execute" will run a write.

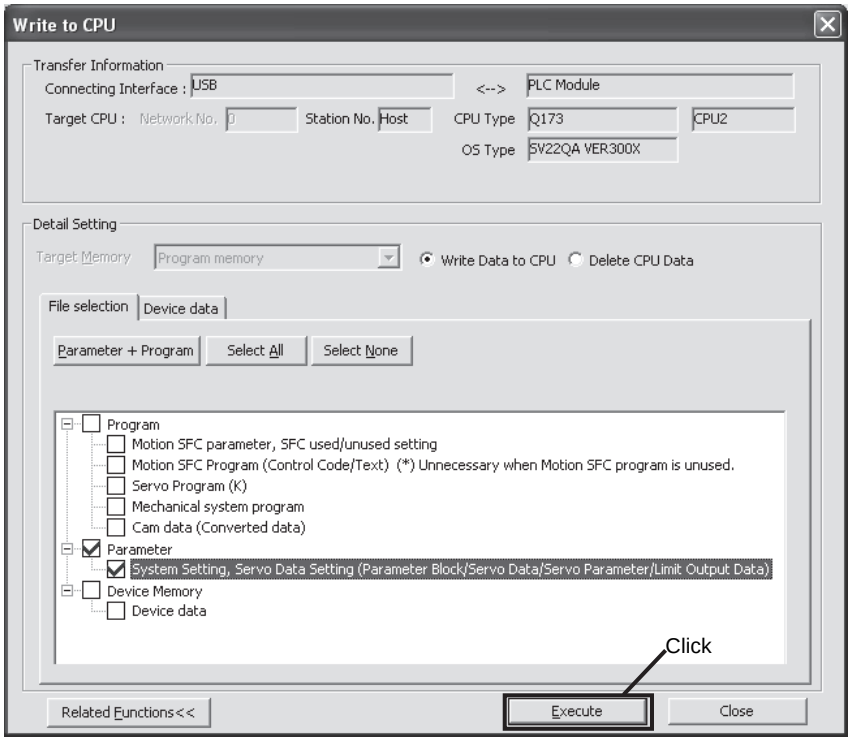

14.2.2 For MT Developer (software version 00W or later)

(1) Display the "Servo data setting" window.

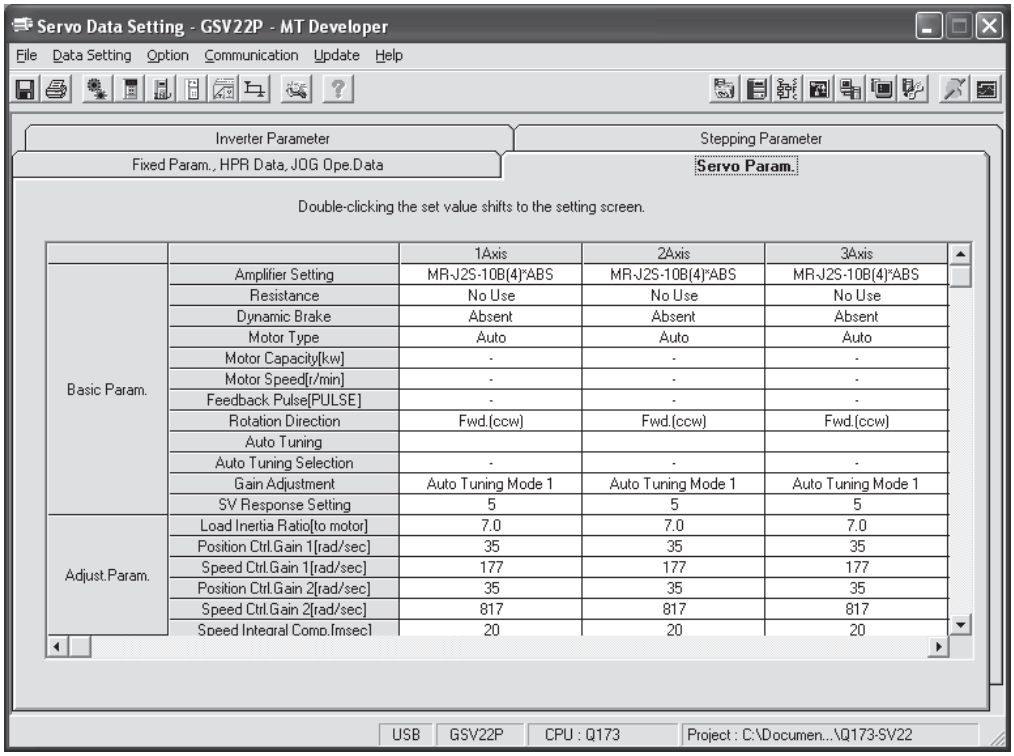

		1Axis	2Axis	3Axis
Basic Param.	Amplifier Setting	MR-J2S-10B(4)*ABS	MR-J2S-10B(4)*ABS	MR-J2S-10B(4)*ABS
	Resistance	No Use	No Use	No Use
	Dynamic Brake	Absent	Absent	Absent
	Motor Type	Auto	Auto	Auto
	Motor Capacity[kw]	-	-	-
	Motor Speed[r/min]	-	-	-
	Feedback Pulse[PULSE]	-	-	-
	Rotation Direction	Fwd.(ccw)	Fwd.(ccw)	Fwd.(ccw)
	Auto Tuning			
	Auto Tuning Selection	-	-	-
	Gain Adjustment	Auto Tuning Mode 1	Auto Tuning Mode 1	Auto Tuning Mode 1
	SV Response Setting	5	5	5
Adjust.Param.	Load Inertia Ratio[to motor]	7.0	7.0	7.0
	Position Ctrl.Gain 1[rad/sec]	35	35	35
	Speed Ctrl.Gain 1[rad/sec]	177	177	177
	Position Ctrl.Gain 2[rad/sec]	35	35	35
	Speed Ctrl.Gain 2[rad/sec]	817	817	817
	Speed Integral Comp.[msec]	20	20	20

(2) Double-click the setting field "1 to 75" under special parameters "Parameter No." in the "Servo parameter" tab and display the "Servo special parameter setting" dialog.

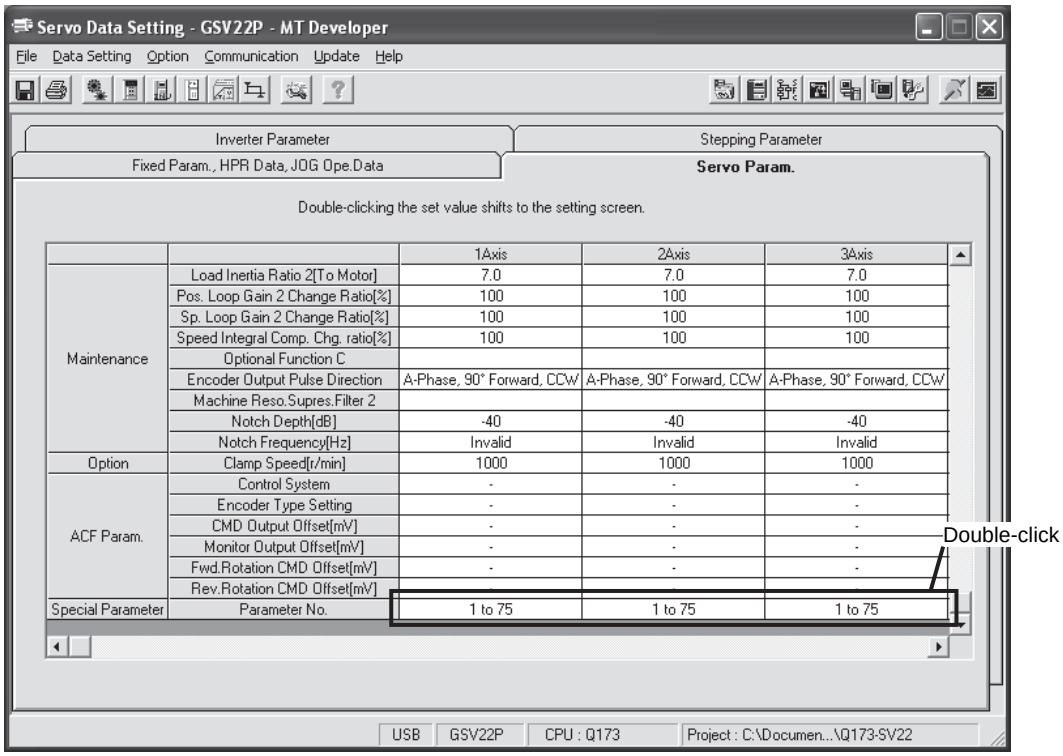

		1Axis	2Axis	3Axis
Maintenance	Load Inertia Ratio 2[To Motor]	7.0	7.0	7.0
	Pos. Loop Gain 2 Change Ratio[%]	100	100	100
	Sp. Loop Gain 2 Change Ratio[%]	100	100	100
	Speed Integral Comp. Chg. ratio[%]	100	100	100
	Optional Function C			
	Encoder Output Pulse Direction	A-Phase, 90° Forward, CCW	A-Phase, 90° Forward, CCW	A-Phase, 90° Forward, CCW
	Machine Reso.Supres.Filter 2			
	Notch Depth[dB]	-40	-40	-40
	Notch Frequency[Hz]	Invalid	Invalid	Invalid
Option	Clamp Speed[r/min]	1000	1000	1000
ACF Param.	Control System	-	-	-
	Encoder Type Setting	-	-	-
	CMD Output Offset[mV]	-	-	-
	Monitor Output Offset[mV]	-	-	-
	Fwd.Rotation CMD Offset[mV]	-	-	-
	Rev.Rotation CMD Offset[mV]	-	-	-
Special Parameter	Parameter No.	1 to 75	1 to 75	1 to 75

(3) Change the parameter setting value.
After changing the setting value of the applicable parameter, click "OK" so that the setting value is reflected.

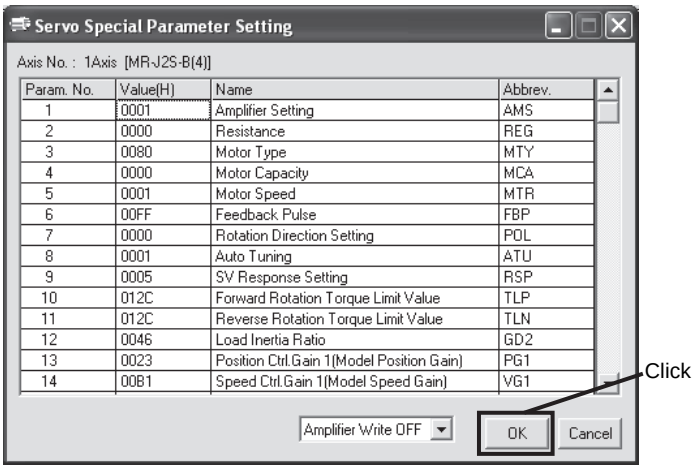

Examples of changes of parameter setting values are shown below.

(a) Change of [Pr. 2 regenerative resistor] (hexadecimal parameter)
To change the setting value to "0020", enter "0020" as it is.

(b) Change of [Pr. 12 load inertia moment ratio relative to the servo motor (load inertia ratio) (decimal parameter)
To change the setting value to "7.0", enter "0046" which is the value resulted from converting "70" to the hexadecimal number.

(c) Change of [Pr. 39 Electronic dynamic brake operating time] (decimal parameter)
To change the setting value to "10000", enter "2710" which is the value resulted from converting "10000" to the hexadecimal number.

(4) Write the changed parameter in communication. Clicking "Write" will run a write.

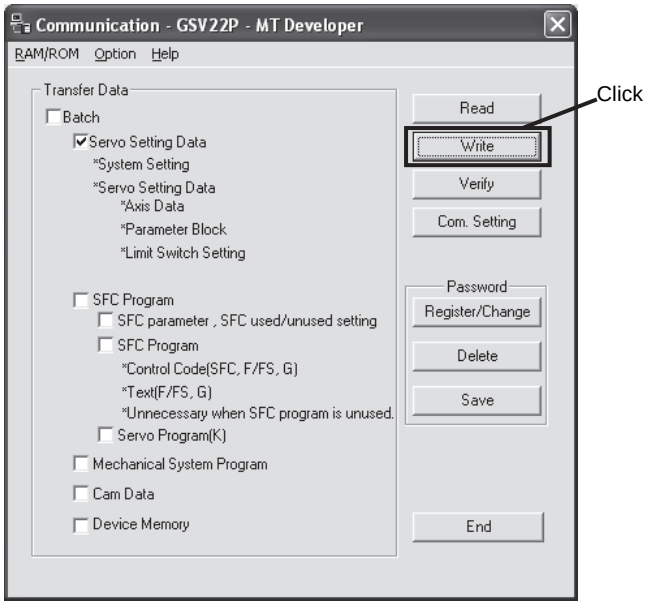

14.2.3 For MT Developer (software version 00V or earlier) or SW3RNC-GSV

POINT
●Perform the steps during communication with the servo controller and the servo amplifier.

(1) Setting procedure

(a) Display the monitor screen.

Set the monitor to a stooped state of monitor using the positioning monitor.

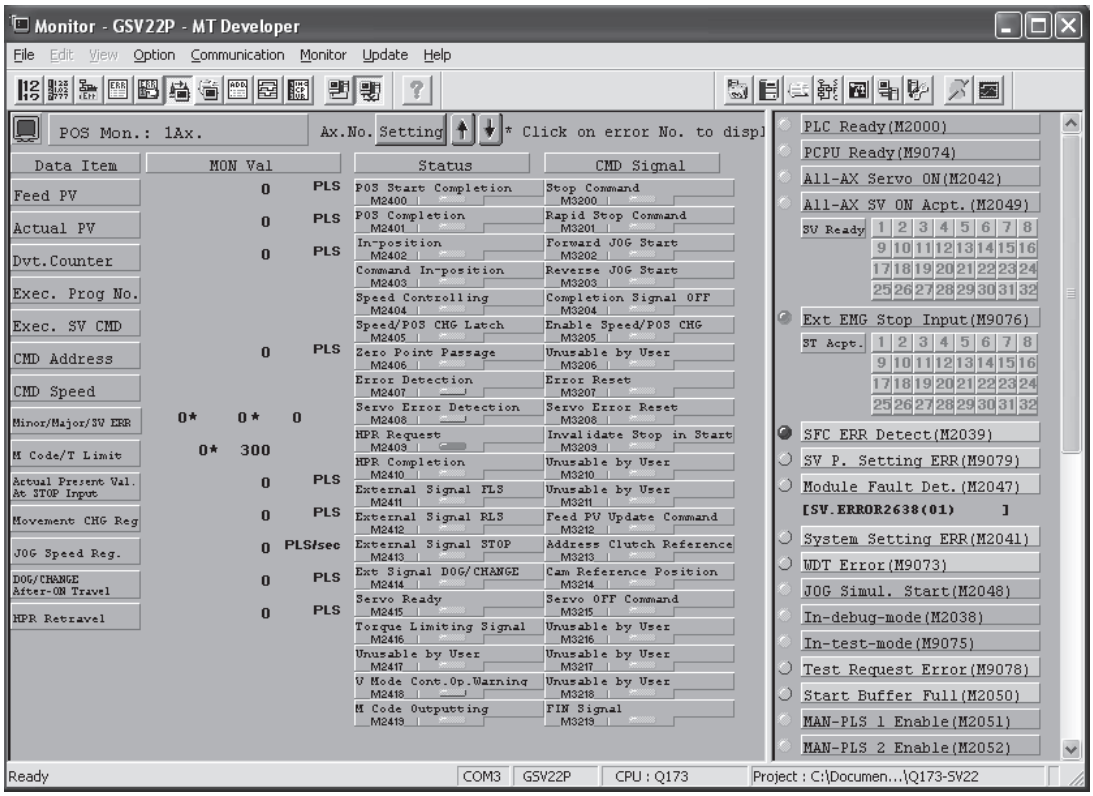

(a) With the monitor screen displayed, use the shortcut keys "Ctrl" + "Shift" + "Alt" + "O" on the keyboard to display the "Servo special parameter setting" dialog.

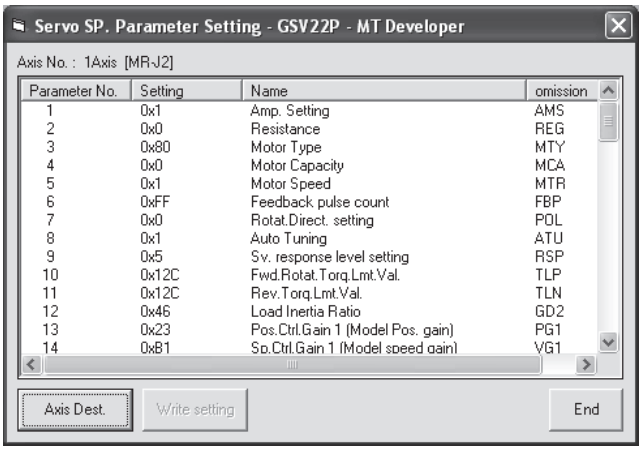

(3) Change the parameter setting value.
After changing the setting value of the applicable parameter, click "OK" to write the setting value to the motion controller and the servo amplifier.

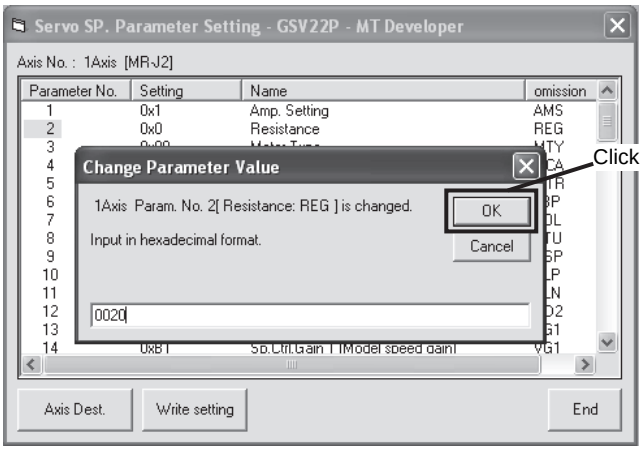

Examples of changes of parameter setting values are shown below.

(a) Change of [Pr. 2 regenerative resistor] (hexadecimal parameter)
To change the setting value to "0020", enter "0020" as it is.

(b) Change of [Pr. 12 load inertia moment ratio relative to the servo motor (load inertia ratio) (decimal parameter)
To change the setting value to "7.0", enter "0046" which is the value resulted from converting "70" to the hexadecimal number.

(c) Change of [Pr. 39 Electronic dynamic brake operating time] (decimal parameter)
To change the setting value to "10000", enter "2710" which is the value resulted from converting "10000" to the hexadecimal number.

(4) Since the parameter values changed in (3) are not reflected in the project, read the servo parameters in communication and save them to the project.

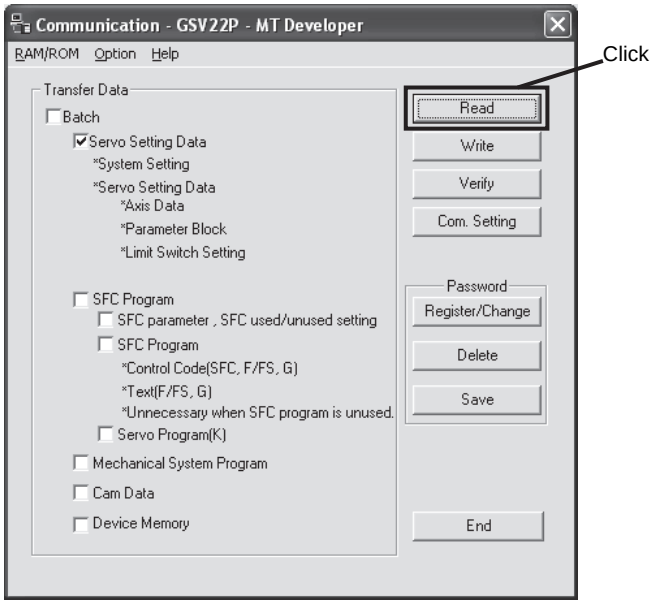

[Appendix 2]
Introduction to Renewal Tool

Mitsubishi Electric System & Service Co., Ltd. provides the related services.
For details, please refer to the following address.

Mitsubishi Electric System & Service Co., Ltd.
www.melsc.co.jp/business/

OVERSEAS SERVICE SUPPORT SECTION
Email: osb.webmaster@melsc.jp

[Appendix 2] Introduction to Renewal Tool

POINT
●For details and the latest version of the tool and compatible models, check the website of Mitsubishi Electric System & Service Co., Ltd.

1. SUMMARY

The MR-J2S renewal tool is a tool to replace the presently used MR-J2S servo amplifier with the MR-J4 servo amplifier. The company is prepared to provide a renewal kit compatible with the existing mounting dimensions and terminal block cables, and a conversion cable compatible with the existing cables.

1.1 Compatible Models

Type	Former model		Replacement
General-purpose interface	MR-J2S-_A MR-J2S-_A1 MR-J2S-_A4	→	MR-J4-_A MR-J4-_A1 MR-J4-_A4
SSCNET interface	MR-J2S-_B MR-J2S-_B1 MR-J2S-_B4		MR-J4-_B-RJ020 + MR-J4-T20 MR-J4-_B1-RJ020 + MR-J4-T20 MR-J4-_B4-RJ020 + MR-J4-T20
Built-in positioning function	MR-J2S-_CP MR-J2S-_CP1		MR-J4-_A-RJ MR-J4-_A1-RJ

1.2 Features

- It is possible to operate the exiting MR-J2S servo motor with the MR-J4 servo amplifier.
- Wiring work can be shortened because the existing cables can be connected as they are. (except for some models)
- The renewal kit can be mounted using the existing mounting holes.
- The existing space can be effectively used by adopting the sliding mechanism for the renewal kit. (For some models)
- By utilizing the renewal tool, it is possible to replace by proceeding in stages from primary replacement to secondary replacement.

  Primary replacement: Replace the servo amplifier only.
  Secondary replacement: Replace the servo motor after replacement of the servo amplifier.
  Simultaneous replacement: Replace the servo amplifier and the servo motor simultaneously.
  * It is not possible to replace the servo motor only.
  * A separate 24 V DC power supply (current capacity: 80 mA or more) for the interface is required when the internal 24 V DC power supply for the interface is used for the MR-J2S servo amplifier. Must be provided by the customer. (Not included with the renewal tool.)

1.2.1 MR-J2S-_A_ renewal tool/MR-J2S-_CP_ renewal tool

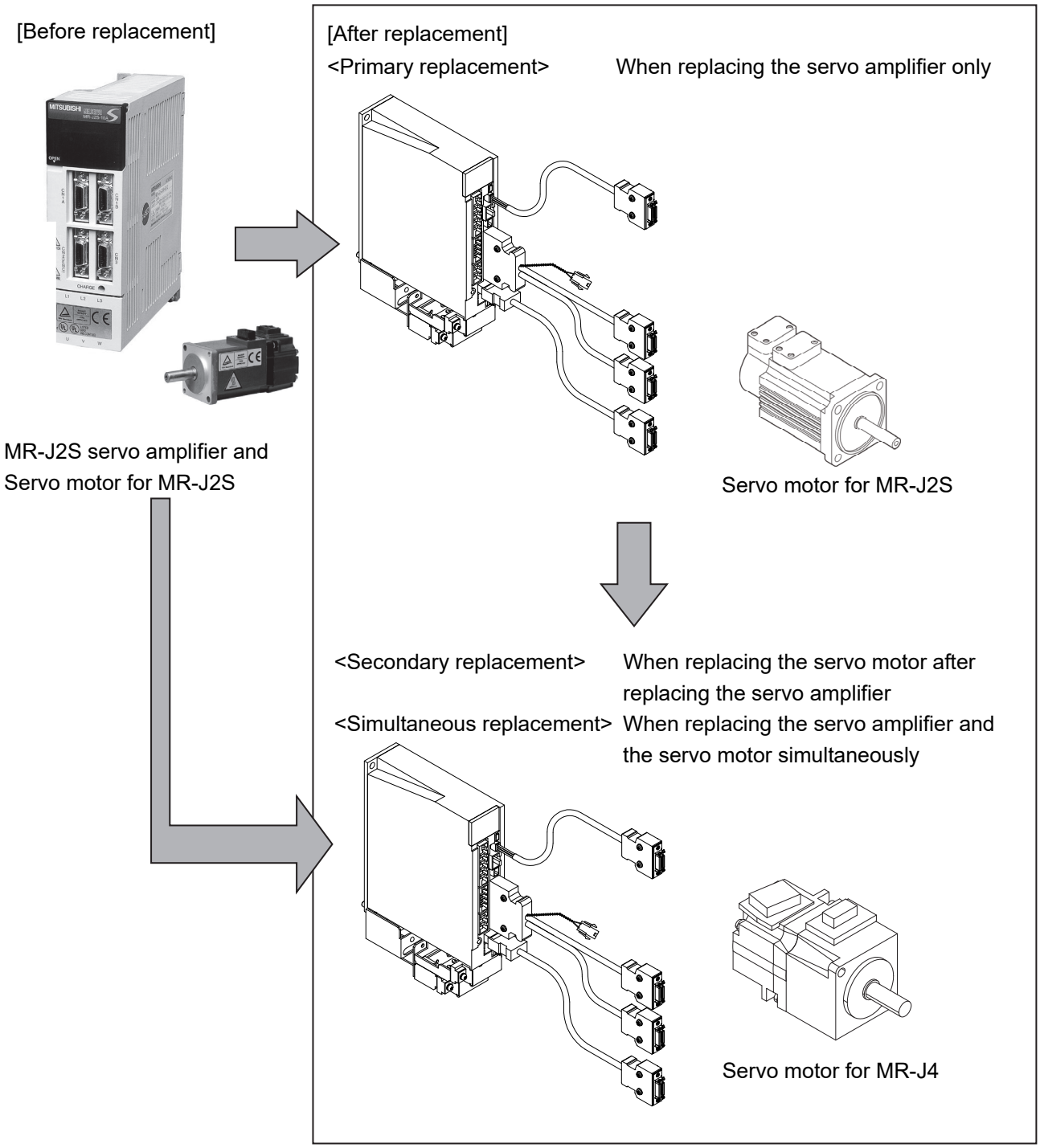

1.2.2 MR-J2S-_B_ renewal tool

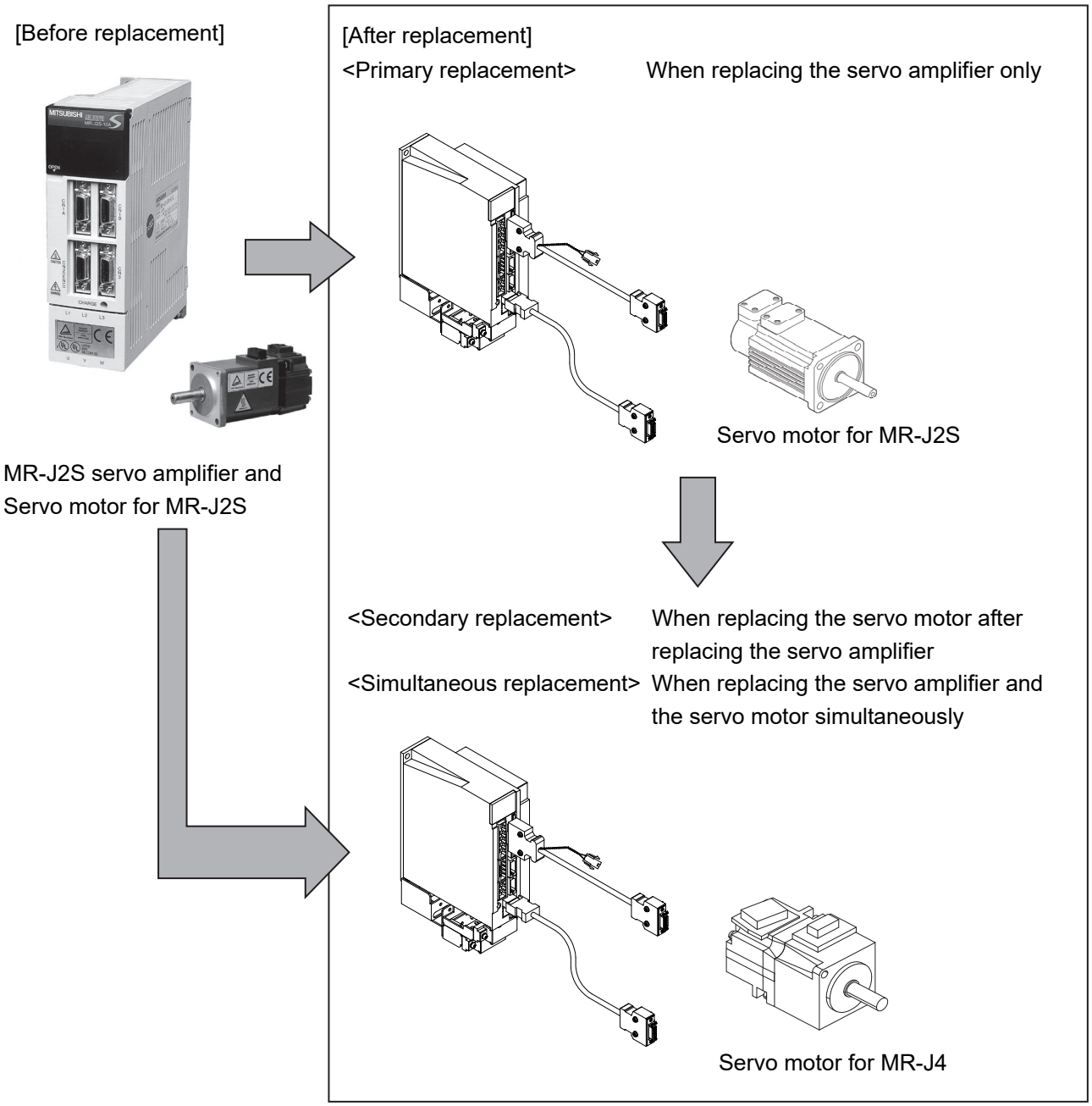

(1) Common items *When the renewal tool is used.

	Item	MR-J2S series	MR-J4 series	When the renewal tool is used	Compatibility (*)	Remarks
Servo amplifier	Dynamic brakes	Built-in (0.1 kW to 7 kW) External (11 kW to 55 kW)	Built-in (0.1 kW to 7 kW) External (11 kW to 55 kW) * Coasting distance is different.		△	(Note 2)
	Regenerative resistor	Built-in (0.2 kW to 7 kW) External (11 kW to 22 kW)	Built-in (0.2 kW to 7 kW) External (11 kW to 22 kW)		△	(Note 3)
	control circuit power supply	24 V DC ±15% 1-phase 100 V AC to 120 V AC 1-phase 200 V AC to 230 V AC 1-phase 380 V AC to 480 V AC	1-phase 100 V AC to 120 V AC 1-phase 200 V AC to 240 V AC 1-phase 380 V AC to 480 V AC		△	(Note 18)
	Main circuit power supply	1-phase 100 V AC to 120 V AC 1-phase/3-phase 200 V AC to 230 V AC 1-phase/3-phase 380 V AC to 480 V AC	1-phase 100 V AC to 120 V AC 1-phase/3-phase 200 V AC to 240 V AC 1-phase/3-phase 380 V AC to 480 V AC		○	
	Interface 24 V DC power supply	Built-in	External supply required	External supply required	×	(Note 4)
	Control circuit power/regenerative resistor terminal connection method	For 200 V: 0.1 kW to 1 kW: Plug-in type connector 2 kW or more: Terminal block For 400 V: 0.6 kW to 2 kW: Plug-in type connector 3.5 kW or more: Terminal block	For 200 V: 0.1 kW to 3.5 kW: Plug-in type connector 5 kW or more: Terminal block For 400 V: 0.6 kW to 3.5 kW: Plug-in type connector 5 kW or more: Terminal block	For 200 V: With terminal block conversion	△	(Note 19)
	Main circuit power supply terminal connection method	For 200 V: Terminal block For 400 V: 0.6 kW to 2 kW: Plug-in type connector 3.5 kW or more: Terminal block	For 200 V: 0.1 kW to 3.5 kW: Plug-in type connector 5 kW or more: Terminal block For 400 V: 0.6 kW to 3.5 kW: Plug-in type connector 5 kW or more: Terminal block	For 200 V: With terminal block conversion (other than of 5 kW)	△	(Note 19)
	Auto tuning	Real-time auto tuning: 15 steps	Real-time auto tuning: 40 steps One-touch tuning		○	
	Advanced vibration suppression control Ⅱ	Unprovided	Provided		○	
	Adaptive filter	Provided (Ⅰ)	Provided (II: with improved function)		○	
	Notch filter	Provided (2 pcs.)	Provided (5 pcs.)		○	
	Tough drive function	Unprovided	Provided		○	
	Drive recorder function	Unprovided	Provided		○	
	Restart after instantaneous power failure	Supported	None		×	(Note 5)
	Cooling method	Natural cooling (0.1 kW to 1 kW) Force cooling (2 kW to 22 kW)	Natural cooling (0.1 kW to 0.6 kW) Force cooling (0.7 kW to 22 kW)		○	(Note 6)
	Heatsink Outside mounting attachment	MR-JACN_ (11 kW to 22 kW) MR-ACN_ (30 kW to 55 kW)	MR-J4ACN_ (11 kW, 15 kW) MR-J3ACN (22 kW) 30 kW to 55 kW: Unprovided		×	(Note 21)

○: Compatible; △: Limited functions or compatible with certain conditions; ×: Incompatible

Refer to Appendix page 2-10 for important points to note.

(2) General-purpose interface *When the renewal tool is used.

	Item	MR-J2S series		MR-J4 series	When the renewal tool is used	Compatibility (*)	Remarks
Servo amplifier	Capacity range	0.1 kW to 0.4 kW (100 V) 0.1 kW to 37 kW (200 V) 0.6 kW to 55 kW (400 V)		0.1 kW to 0.4 kW (100 V) 0.1 kW to 37 kW (200 V) 0.6 kW to 55 kW (400 V)	0.1 kW to 0.4 kW (100 V) 0.1 kW to 37 kW (200 V) 0.6 kW to 55 kW (400 V)	○	(Note 1)
	Control mode	• Position control mode (pulse command) • Speed control mode (analog command) • Torque control mode (analog command)		• Position control mode (pulse command) • Speed control mode (analog command) • Torque control mode (analog command)		○	
	Control signal/ Encoder signal/ Monitor signal Connector	7 kW or less	Control signal (CN1A, CN1B) 2 pcs Encoder signal (CN2), 1 unit Monitor signal (CN3), 1 unit	Control signal (CN1), 1 unit Encoder signal (CN2), 1 unit Monitor signal (CN6), 1 unit ***Different connector shape**	With conversion cable Compatible	○	
		11 kW to 55 kW	Control signal (CN1A, CN1B) 2 pcs Encoder signal (CN2), 1 pcs. Communication connector (CN3) 1 pcs. Monitor signal (CN4), 1 pcs.			△	(Note 20)
	Maximum input pulse	Differential pulse 500 kpulses/s Open-collector 200 kpulses/s Command pulse: Sink		Differential pulse 4 Mpulses/s Open-collector 200 kpulses/s Command pulse: Sink		○	
	Command pulse logic setting	Forward/reverse rotation pulse train Signed pulse train A-phase/B-phase pulse train		Forward/reverse rotation pulse train Signed pulse train A-phase/B-phase pulse train		○	(Note 7)

○: Compatible; △: Limited functions or compatible with certain conditions; ×: Incompatible

Refer to Appendix page 2-10 for important points to note.

Continued from previous page *When the renewal tool is used.

Item		MR-J2S series	MR-J4 series	When the renewal tool is used	Compatibility (*)	Remarks
Servo amplifier	DI signal	8 points	9 points		○	
		SON reception time After power-up, 2 s at maximum	SON reception time After power-up, 3.5 s at maximum		△	(Note 8)
		Forced stop: EM1 (DB stop)	Forced stop: EM1 (DB stop)/Possible to select EM2 (deceleration stop)		△	(Note 9)
	DO signal	6 points	6 points		○	
		ALM: After power-up, the output is on in 1 s at most	ALM: ALM: After power-up, the output is on in 3.5 s at most		△	(Note 10)
		Alarm code output ACD0 (Pin CN1A-19), 1st digit ACD1 (Pin CN1A-18), 2nd digit ACD2 (Pin CN1B-19), 3rd digit	Alarm code output ACD0 (Pin CN1-24), 1st digit ACD1 (Pin CN1-23), 2nd digit ACD2 (Pin CN1-22), 3rd digit	Unsupported	×	(Note 11)
	DIO interface	Input: Sink/source Output: Sink	Input/Output: Sink/source		○	
	Encoder pulse output	ABZ-phase (differential line driver) Z-phase (open-collector)	ABZ-phase (differential line driver) Z-phase (open-collector)		○	(Note 12)
	Absolute position detection system	PC → ABS transfer mode TL → ABS request	PC → ABS transfer mode TL → ABS request		○	
	Parameter setting method	Setup software (SETUP161E) Communication method: RS-232C Push-button	MR Configurator2 Communication method: USB Push-button		△	(Note 13)
	RS-422/232C communication function	RS-422/232C serial communication function	RS-422 serial communication function	Unsupported	×	(Note 14)
	Analog monitor input	Input: 2 ch; 10-bit torque; 14-bit speed or equivalent	Input: 2 ch; 10-bit torque; 14-bit speed or equivalent		○	
	Analog monitor output	2 ch (0 to ±10 V); 10-bit resolution or equivalent [Monitor signal] • Servo motor speed (±8 V/max. speed) • Torque (±8 V/max. torque) • Current command (±8 V/max. current command) • Command pulse frequency (±10 V/500 kpulses/s) • Droop pulses (±10 V/128 pulses) • Droop pulses (±10 V/2048 pulses) • Droop pulses (±10 V/8192 pulses) • Droop pulses (±10 V/32768 pulses) • Droop pulses (±10 V/131072 pulses) • Bus voltage (+8 V/400 V)	2 ch (0 to ±10 V); 10-bit resolution or equivalent [Monitor signal] • Servo motor speed (±8 V/max. speed) • Torque (±8/max. torque) • Current command (±8 V/max. current command) • Command pulse frequency (±10 V/4 Mpulses/s) • Droop pulses (±10 V/100 pulses) • Droop pulses (±10 V/1000 pulses) • Droop pulses (±10 V/10000 pulses) • Droop pulses (±10 V/100000 pulses) • Feedback position (±10 V/1 Mpulse/s) • Feedback position (±10 V/10 Mpulse/s) • Feedback position (±10 V/100Mpulse/s) • Bus voltage (+8 V/400 V) • Speed command 2 (±8 V/max. speed) • Encoder inside temperature (±10 V/128°C)		△	(Note 15) (Note 16)

○: Compatible; △: Limited functions or compatible with certain conditions; ×: Incompatible

Refer to Appendix page 2-10 for important points to note.

(3) SSCNET interface *When the renewal tool is used.

	Item	MR-J2S series		MR-J4 series	When the renewal tool is used	Compatibility (*)	Remarks
Servo amplifier	Capacity range	0.1 kW to 0.4 kW (100 V) 0.1 kW to 37 kW (200 V) 0.6 kW to 55 kW (400 V)		0.1 kW to 0.4 kW (100 V) 0.1 kW to 37 kW (200 V) 0.6 kW to 55 kW (400 V)	0.1 kW to 0.4 kW (100 V) 0.1 kW to 37 kW (200 V) 0.6 kW to 55 kW (400 V)	○	(Note 1)
	Control mode	• Position control mode • Speed control mode		• Position control mode • Speed control mode • Torque control mode		○	
	Network	SSCNET		SSCNET (When the MR-J4-T20 SSCNET conversion unit is used.)		○	
	Control signal/ Encoder signal/ Monitor signal Connector	7 kW or less	For SSCNET (CN1A, CN1B) 2 pcs. Encoder signal (CN2), 1 unit Monitor signal (CN3), 1 unit	MR-J4-_B-RJ020 servo amplifier • Encoder signal (CN2), 1 unit • Monitor signal (CN3), 1 unit MR-J4-T20 unit • For SSCNET (CN10A, CN10B) 2 pcs. ***Different connector shape**	With conversion cable	○	
		11 kW to 55 kW	For SSCNET (CN1A, CN1B) 2 pcs. Encoder signal (CN2), 1 unit Communication connector (CN3) 1 unit. Monitor signal (CN4), 1 unit Control signal (CON2),1 unit				
	DI signal	0 points		3 points		○	
		SON reception time After power-up, 3 s at maximum		SON reception time After power-up, 4 s at maximum		△	(Note 8)
		Forced stop: EM1 (DB stop)		Forced stop: EM1 (DB stop) / Possible to select EM2 (deceleration stop)		○	(Note 9)
	DO signal	2 points		3 points		○	
	DIO interface	Input: Sink/source Output: Sink		Input/Output: Sink/source		○	
	Encoder pulse output	ABZ-phase (differential line driver)		ABZ-phase (differential line driver)		○	(Note 12)
	Parameter setting method	Setup software (SETUP161E) Communication method: RS-232C		Setup software (SETUP161E) Communication method: RS-232C (When the MR-J4-T20 SSCNET conversion unit is used.) *A separate junction cable is necessary.		○	(Note 17)
	Analog monitor output	2 ch (0 to ±10 V); 10-bit resolution or equivalent [Monitor signal] • Servo motor speed (±8 V/max. speed) • Torque (±8 V/max. torque) • Current command (±8 V/max. current command) • Speed command (±8 V/max. speed) • Droop pulses (±10 V/128 pulses) • Droop pulses (±10 V/2048 pulses) • Droop pulses (±10 V/8192 pulses) • Droop pulses (±10 V/32768 pulses) • Droop pulses (±10 V/131072 pulses) • Bus voltage (+8 V/400 V)		2 ch (0 to ±10 V); 10-bit resolution or equivalent [Monitor signal] • Servo motor speed (±8 V/max. speed) • Torque (±8 V/max. torque) • Current command (±8 V/max. current command) • Speed command (±8 V/max. speed) • Droop pulses (±10 V/128 pulses) • Droop pulses (±10 V/2048 pulses) • Droop pulses (±10 V/8192 pulses) • Droop pulses (±10 V/32768 pulses) • Droop pulses (±10 V/131072 pulses) • Bus voltage (+8 V/400 V)		○	

○: Compatible; △: Limited functions or compatible with certain conditions; ×: Incompatible

Refer to Appendix page 2-10 for important points to note.

(4) Built-in positioning function *When the renewal tool is used.

	Item	MR-J2S series	MR-J4 series	When the renewal tool is used	Compatibility (*)	Remarks
Servo amplifier	Capacity range	0.1 kW to 0.4 kW (100 V) 0.1 kW to 7 kW (200 V)	0.1 kW to 0.4 kW (100 V) 0.1 kW to 7 kW (200 V)	0.1 kW to 0.4 kW (100 V) 0.1 to 7 kW (200 V)	○	(Note 1)
	Control mode	• Built-in positioning function	• Built-in positioning function • Position control mode (pulse command) • Speed control mode (analog command) • Torque control mode (analog command)		○	
	Control signal/ Encoder signal/ Monitor signal Connector	Control signal (CN1A, CN1B), 2 unit Encoder signal (CN2), 1 unit Monitor signal (CN3), 1 unit	Control signal (CN1), 1 unit Encoder signal (CN2), 1 unit Monitor signal (CN6), 1 unit ***Different connector shape**	With conversion cable Compatible	○	
	Manual pulse generator Maximum input pulse	Open collector 200 kpulses/s	Open collector 200 kpulses/s		○	
	DI signal	8 points	11 points		○	
		SON reception time After power-up, 2 s at maximum	SON reception time After power-up, 5 s at maximum		△	(Note 8)
		Forced stop: EM1 (DB stop)	Forced stop: EM1 (DB stop)/Possible to select EM2 (deceleration stop)		△	(Note 9)
	DO signal	5 points	8 points		○	
		ALM: After power-up, the output is on in 1 s at most	ALM: ALM: After power-up, the output is on in 5 s at most		△	(Note 10)
		Alarm code output ACD0 (Pin CN1A-19), 1st digit ACD1 (Pin CN1A-18), 2nd digit ACD2 (Pin CN1B-19) 3rd digit	Alarm code output ACD0 (Pin CN1-24), 1st digit ACD1 (Pin CN1-23), 2nd digit ACD2 (Pin CN1-22), 3rd digit	Unsupported	×	(Note 11)
	DI/DO combination	1 points	0 points	Unsupported	×	(Note 22)
	DIO interface	Input: Sink/source Output: Sink	Input/Output: Sink/source		○	
	Number of internal speed commands	7 points	7 points		○	
	Encoder pulse output	ABZ-phase (differential line driver) Z-phase (open-collector)	ABZ-phase (differential line driver) Z-phase (open-collector)		○	(Note 12)
	Parameter setting method	Setup software (SETUP161E) Communication method: RS-232C Push-button	MR Configurator2 Communication method: USB Push-button		△	(Note 13)
	RS-422/232C communication function	RS-422/232 serial communication function	RS-422 serial communication function	Unsupported	×	(Note 14)
	Point table	up to 31	up to 255		○	
	Absolute speed encoder system	Set by [Pr. 2]	Set by [Pr. PA03]		○	
	Analog monitor input	Input: 2 ch; 10-bit torque; 10-bit override or equivalent	Input: 2 ch; 10-bit torque; 10-bit override or equivalent		○	
	Analog monitor output	2 ch (0 to ±10 V); 10-bit resolution or equivalent [Monitor signal] • Servo motor speed (±8 V/max. speed) • Torque (±8 V/max. torque) • Current command (±8 V/max. current command) • Speed command (±8 V/max. speed) • Droop pulses (±10 V/128 pulses) • Droop pulses (±10 V/2048 pulses) • Droop pulses (±10 V/8192 pulses) • Droop pulses (±10 V/32768 pulses) • Droop pulses (±10 V/131072 pulses) • Bus voltage (+8 V/400 V)	2 ch (0 to ±10 V); 10-bit resolution or equivalent [Monitor signal] • Servo motor speed (±8 V/max. speed) • Torque (±8 V/max. torque) • Current command (±8 V/max. current command) • Speed command (±8 V/max. speed) • Droop pulses (±10 V/100 pulses) • Droop pulses (±10 V/1000 pulses) • Droop pulses (±10 V/10000 pulses) • Droop pulses (±10 V/100000 pulses) • Bus voltage (+8 V/400 V)		△	(Note 15) (Note 16)

○: Compatible; △: Limited functions or compatible with certain conditions; ×: Incompatible

Refer to Appendix page 2-10 for important points to note.

<Precautions>

Note 1. The renewal tool is compatible with the following capacity:
- General-purpose interface/SSCNET interface: 0.1 kW to 0.4 kW (100 V), 0.1 kW to 37 kW (200 V), and 0.6 kW to 55 kW (400 V)
- Built-in positioning: 0.1 kW to 0.4 kW (100 V) and 0.1 kW to 7 kW (200 V)

2. Note that the coasting distance is different between the MR-J2S servo amplifier and the MR-J4 servo amplifier.
When DB assignment function is used for a servo amplifier of 11 kW or more, set the parameter as follows.
For general-purpose interfaces, set [Pr. PD27] as "0006".
For SSCNET interfaces, set [Pr. PD08] as "0006".
3. When replacing, some models cannot use the existing regenerative option. Provide regenerative options as necessary by reselecting the capacity, including calculating the regenerative ability again. Refer to Chapter 7.
4. **A separate 24 V DC power supply (current capacity: 80 mA or more) for the interface is required** when the internal 24 V DC power supply for the interface is used for the MR-J2S servo amplifier. **Must be provided by the customer. (Not included with the renewal tool.)**
5. There is no restart function in the MR-J4 servo amplifier during momentary power interruption. When replacing, if undervoltage (AL 10.1 or AL 10.2) is generated by instantaneous power failure, reset the alarm (turn off the power once) and restart.
6. Please note that if the renewal kit is used, it is necessary to remove the renewal kit when replacing the servo amplifier cooling fan.
7. When replacing, it is necessary to adjust the command pulse train logic setting between the positioning module and the servo amplifier. For details, refer to Part 2 Section 3.7.
8. This is the time between power-on and servo-on reception. Due to different reception times, sometimes review of the external sequence is necessary upon replacement.
9. When replacing to the MR-J2S servo amplifier, it is necessary to set the parameters to EM1 (DB stop) (at the time of shipment of the MR-J4 servo, the parameter is set to EM2 (deceleration stop)). For details about parameter settings, refer to Part 2 for general-purpose interfaces, Part 3 for SSCNET interfaces, and Part 4 for built-in positioning.
For built-in positioning, it is not able to change the assignment of the forced stop signal (CN1-42 pin) by the parameter in the MR-J4 servo amplifier. When the assignment of the EMG signal in the existing MR-J2S servo amplifier has been changed, the existing wiring change becomes necessary.
10. This is the time until alarm signal output. Due to different reception times, sometimes review of the external sequence is necessary upon replacement. Refer to Part 7 for details.
11. Note that the renewal tool is **not compatible with alarm code output**.
12. Upon replacement, it is necessary to set the parameter for the encoder output pulses.
For details about parameter settings, refer to Part 2 for general-purpose interfaces, Part 3 for SSCNET interfaces, and Part 4 for built-in positioning.
13. When replacing, a separate communication cable (USB cable: MR-J3USBCBL3M) is required to connect between the servo amplifier and the personal computer.
14. The renewal tool is **not compatible with RS-422/232C serial communication functions.**
15. Please note that the command pulse frequency and the droop pulse output unit are different.
16. Due to differences in servo motor maximum speed, for secondary and simultaneous replacement the output value of the monitor (servo motor speed) is different from that of the existing servo amplifier.
Note that it is required to change the program when using monitor output with existing equipment.
17. In order to connect between the SSCNET conversion unit (model: MR-J4-T20) and the personal computer, both the existing communication cable (model: MR-CPCATCBL3M) and the junction cable for RS-232C (model: MR-J4T20CH00) are required.
18. Please note that the control circuit power supply of the 400 V servo amplifier (7 kW or less) between MR-J2S and MR-J4 are different.
19. Not included with the renewal tool for 400 V. Please note that it is required to be laid again when the terminal size etc. are different.
20. When replacing a converter unit, a new cable for CN1 is required to be laid.
21. A renewal kit and mounting attachment are not compatible with a heat sink outside mounting attachment of the MR-J2S servo amplifier.
22. The renewal tool is not compatible with the DI/DO combination function.

(5) Encoder *When the renewal tool is used.

Item		MR-J2S series	MR-J4 series	When the renewal tool is used	Compatibility (*)	Remarks
Encoder	Connector	1 pcs.	1 pc, different connector shape	With conversion cable	○	
	Communication method	Serial communication	Serial communication		○	
	Resolution	131072 pulses/rev	4194304 pulses/rev		△	(Note)

○: Compatible; △: Limited functions or compatible with certain conditions; ×: Incompatible

Note. Similar operation is possible using parameter settings. For details about parameter settings, refer to Part 2 for general-purpose interfaces, Part 3 for SSCNET interfaces, and Part 4 for built-in positioning. For the MR-J4-_B-RJ020 servo amplifier, if the HG series servo motor is used, the encoder resolution per rotation of the servo motor is not 4194304 pulses/rev but becomes 131072 pulses/rev.

(6) Servo motor *When the renewal tool is used.

Item		MR-J2S series	MR-J4 series	When the renewal tool is used	Compatibility (*)	Remarks
Servo motor	Connector (power supply/brake)	HC-KFS	HG-KR (different connector shape)	With conversion cable	○	
		HC-MFS	HG-MR (different connector shape)		○	
		HC-SFS	HG-SR (different connector shape)		△	(Note 1)
		HC-RFS	HG-RR		○	
		HC-LFS	HG-JR (different connector shape)		△	(Note 1)
		HC-UFS(B) 2000 r/min	HG-UR		○	
		HC-UFS(B) 3000 r/min	HG-KR (different connector shape)		○	
		HA-LFS (7 kW or less)	HG-SR (different connector shape)		○	
		HA-LFS (11 kW or more)	HG-JR (different connector shape)		△	(Note 2) (Note 3) (Note 4)

Note 1. Laying a new electromagnetic brake cable is required when performing a secondary replacement or simultaneous replacement of a motor with brake.

2. If the HA-LFS motor is replaced with the HG-JR motor, it is necessary to change the crimp terminal of the existing power supply cable.
   Refer to Part 8 for details.

3. If the existing motor is replaced with the HG-JR11K1M motor or JR15K1M motor, the replacement motor will not have a cooling fan and thermal terminal block. Because the existing wiring becomes unnecessary, insulate the cables as needed.

4. Laying a new encoder cable is required when performing a replacement of a following motor. Contact a Mitsubishi Electric System & Service Co., Ltd. if a new cable required.
   - HG-JR22K1M(4)
   - HG-JR30K1M(4)
   - HG-JR37K1M(4)
   - HG-JR45K1M4
   - HG-JR55K1M4
   - HG-JR15K1(4)
   - HG-JR20K1(4)
   - HG-JR25K1(4)
   - HG-JR30K1(4)
   - HG-JR37K1(4)

1.3 Renewal Tool Product Names

(1) For general-purpose interface and built-in positioning

(Example) Primary replacement (SC-J2S(CP)J4KT02K)

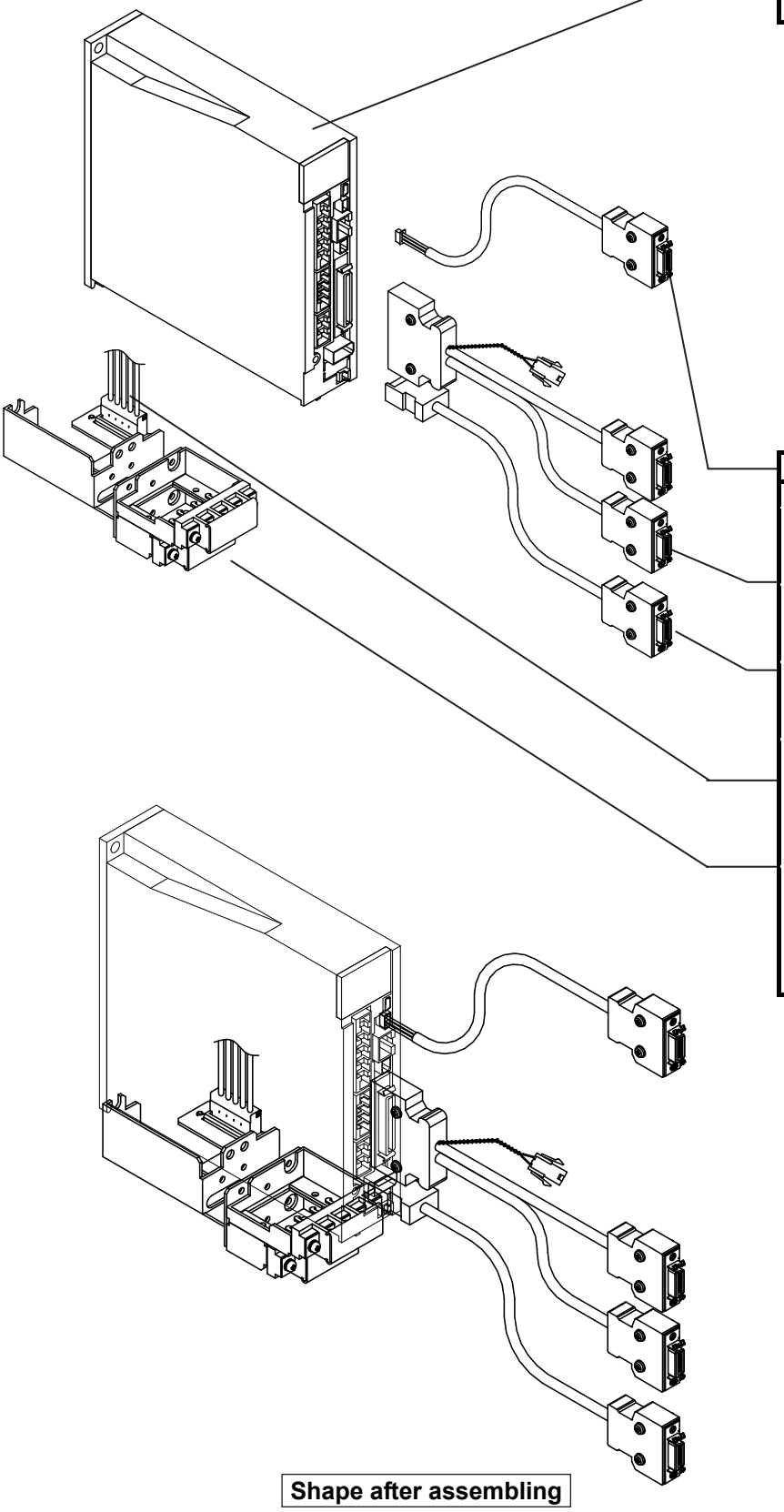

Name
Servo amplifier MR-J4-_A_(-RJ) (Note 1)

Note 1. **For primary replacement, the software version of the servo amplifier differs depending on the corresponding motor.** Refer to "Part 7: Common Reference Material" in this document.

Name	
Renewal kit (SC-J2S(CP)J4KT_K)	
	Monitor conversion cable (Note 2) The MR-J2S monitor signal is changed for MR-J4.
	Control signal conversion cable The MR-J2S encoder signal is changed for MR-J4.
	Encoder conversion cable The MR-J2S encoder signal is changed for MR-J4.
	Control circuit power supply conversion terminal block (Note 3) Connects to the existing control circuit power supply and regenerative option.
	Main circuit power supply conversion terminal block (Note 3) Connects to the existing main circuit power supply and servo motor power supply.

Note 2. The monitor conversion cable compatible with a servo amplifier capacity of 11 kW to 55 kW has a different shape.

Note 3. There is no conversion terminal block in the following model:

- SC-J2S(CP)J4KT5K, 7K
- SC-J2SJ4BS01 to 09

(2) For SSCNET interface

(Example) Primary replacement (SC-J2SBJ4KT02K)

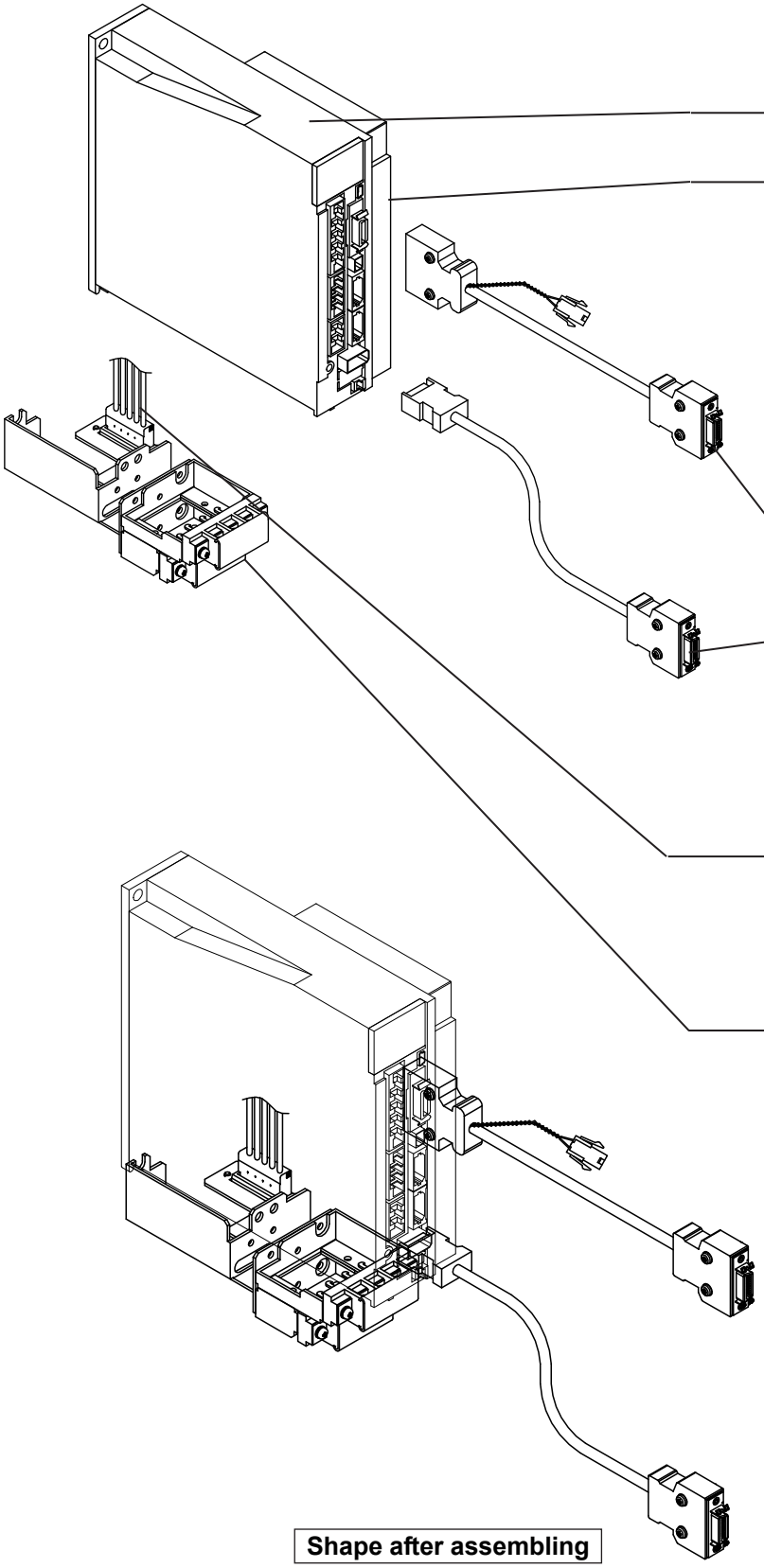

Name
Servo amplifier (MR-J4-_B_-RJ020) (Note 1)
SSCNET conversion unit (MR-J4-T20)

Note 1. **For primary replacement, the software version of the servo amplifier differs depending on the corresponding motor.** Refer to "[Appendix 1] Summary of MR-J4_B-RJ020+MR-J4-T20".

Name	
Renewal kit (SC-J2SBJ4KT_K)	
	Control signal conversion cable (Note 2) The MR-J2S encoder signal is changed for MR-J4.
	Encoder conversion cable The MR-J2S encoder signal is changed for MR-J4.
	Control circuit power supply conversion terminal block (Note 3) Connects to the existing control circuit power supply and regenerative option.
	Main circuit power supply conversion terminal block (Note 3) Connects to the existing main circuit power supply and servo motor power supply.

Note 2. The control signal conversion cable compatible with a servo amplifier capacity of 11 kW to 55 kW has a different shape.

Note 3. There is no conversion terminal block in the following model:
- SC-J2S(CP)J4KT5K, 7K
- SC-J2SJ4BS01 to 09

1.4 Renewal Tool Configuration

(1) For general-purpose interface and built-in positioning

1) Primary replacement:
When replacing the servo amplifier only

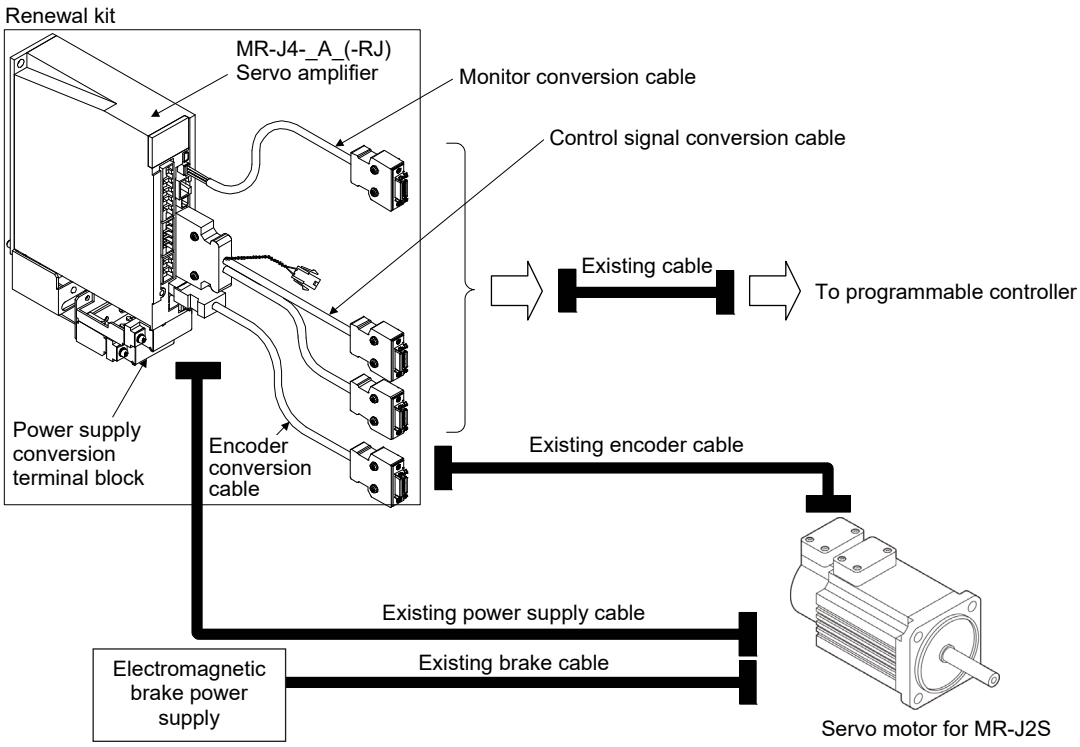

2) Secondary replacement: When replacing the servo motor after replacing the servo amplifier
Simultaneous replacement: When replacing the servo amplifier and the servo motor simultaneously

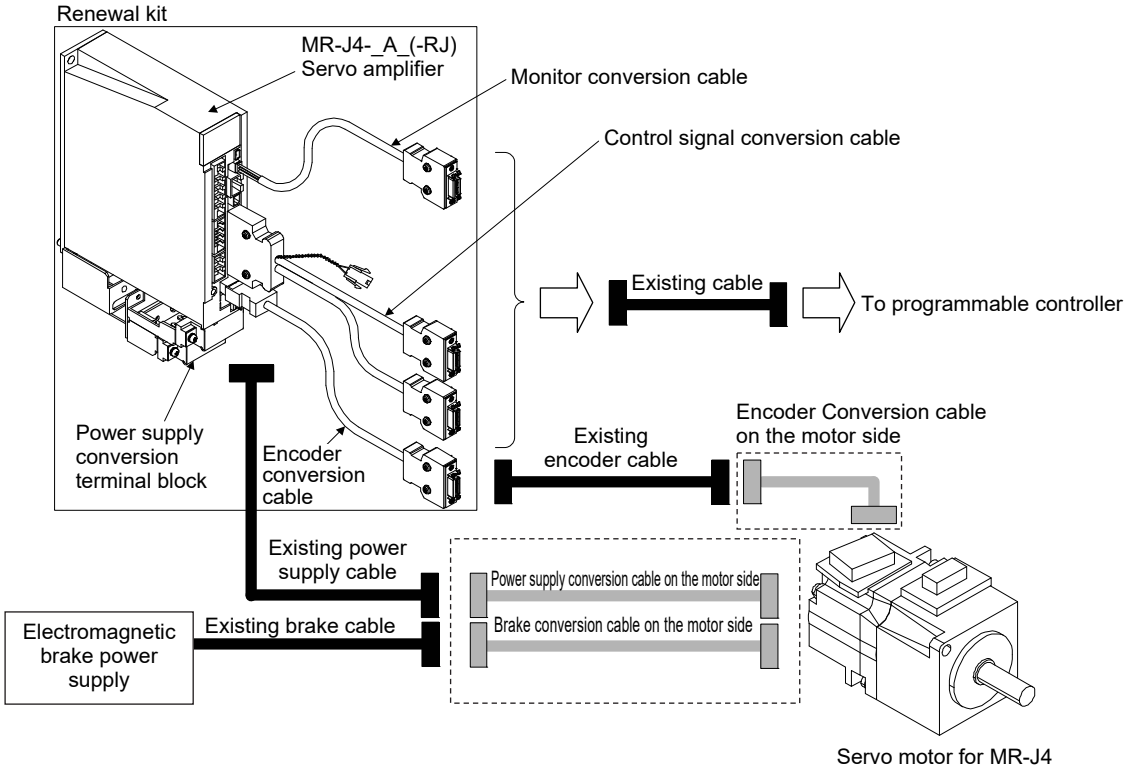

(2) For SSCNET interface

1) Primary replacement:
When replacing the servo amplifier only

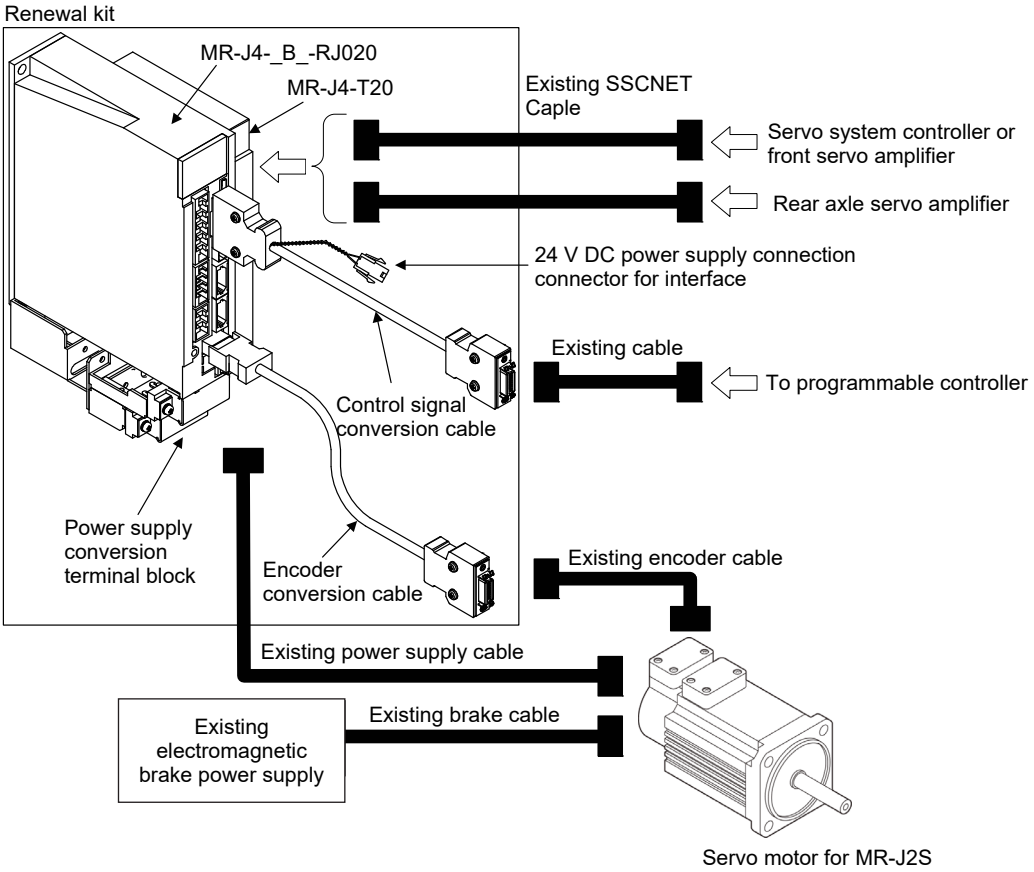

2) Secondary replacement: When replacing the servo motor after replacing the servo amplifier
Simultaneous replacement: When replacing the servo amplifier and the servo motor simultaneously

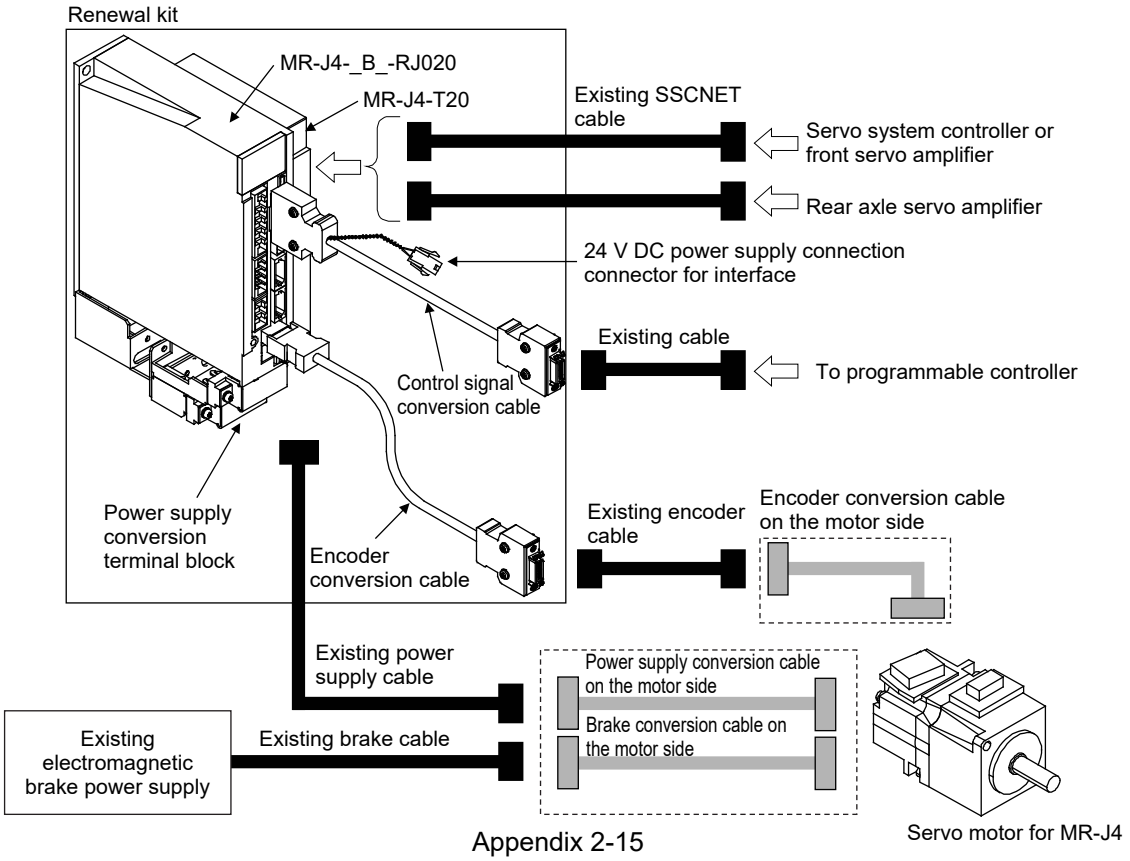

2. RENEWAL TOOL PRODUCT LIST

(1) For general-purpose interface

No.	Product name	Model	Application	Replacement method
1	Renewal kit	SC-J2SJ4KT02K	MR-J4-_A_servo amplifier capacity: For 100 W, 200 W	Used for primary replacement and simultaneous replacement.
2		SC-J2SJ4KT06K	MR-J4-_A_servo amplifier capacity: For 400 W, 600 W	
3		SC-J2SJ4KT1K	MR-J4-_A servo amplifier capacity: For 700 W, 1 kW	
4		SC-J2SJ4KT3K	MR-J4-_A servo amplifier capacity: For 2 kW, 3.5 kW	
5		SC-J2SJ4KT5K	MR-J4-_A servo amplifier capacity: For 5 kW	
6		SC-J2SJ4KT7K	MR-J4-_A servo amplifier capacity: For 7 kW	
7		SC-J2SJ4KT15K	MR-J4-_A servo amplifier capacity: For 11 kW, 15 kW	
8		SC-J2SJ4KT22K	MR-J4-_A servo amplifier capacity: For 22 kW	
9	Servo amplifier side conversion cable set	SC-J2SJ4CSET-01 (for 7 kW or less)	Control signal conversion cable (SC-J2SJ4CTC03M)	
			Encoder conversion cable (SC-J2SJ4ENC03M)	
			Monitor conversion cable (SC-J2SJ4MOC03M)	
			24 V DC connector cable (SC-J2SJ4CTPWC5M)	
10		SC-J2SJ4CSET-02 (for 11 kW or more)	Control signal conversion cable (SC-J2SJ4CTC03M)	
			Encoder conversion cable (SC-J2SJ4ENC03M)	
			Monitor conversion cable (SC-J2SJ4MO2C03M)	
			24 V DC connector cable (SC-J2SJ4CTPWC5M)	

(2) For SSCNET interface

No.	Product name	Model	Application	Replacement method
1	Renewal kit	SC-J2SBJ4KT02K	MR-J4-_B_-RJ020 servo amplifier capacity: For 100 W, 200 W	Used for primary replacement and simultaneous replacement.
2		SC-J2SBJ4KT06K	MR-J4-_B_-RJ020 servo amplifier capacity: For 400 W, 600 W	
3		SC-J2SBJ4KT1K	MR-J4-_B-RJ020 amplifier capacity: For 700 W, 1 kW	
4		SC-J2SBJ4KT3K	MR-J4-_B-RJ020 servo amplifier capacity: For 2 kW, 3.5 kW	
5		SC-J2SBJ4KT5K	MR-J4-_B-RJ020 servo amplifier capacity: For 5 kW	
6		SC-J2SBJ4KT7K	MR-J4-_B-RJ020 servo amplifier capacity: For 7 kW	
7		SC-J2SBJ4KT15K	MR-J4-_B-RJ020 servo amplifier capacity: For 11 kW, 15 kW	
8		SC-J2SBJ4KT22K	MR-J4-_B-RJ020 servo amplifier capacity: For 22 kW	
9	Servo amplifier side conversion cable set	SC-J2SBJ4CSET-01 (for 7 kW or less)	Control signal conversion cable (SC-J2SBJ4CT1C03M)	
			Encoder conversion cable (SC-J2SJ4ENC03M)	
			24 V DC connector cable (SC-J2SJ4CTPWC5M)	
10		SC-J2SBJ4CSET-02 (for 11 kW or more)	Control signal conversion cable (SC-J2SBJ4CT2C03M)	
			Encoder conversion cable (SC-J2SJ4ENC03M)	
			24 V DC connector cable (SC-J2SJ4CTPWC5M)	

(3) For built-in positioning

No.	Product name	Model	Application	Replacement method
1	Renewal kit	SC-J2SCPJ4KT02K	MR-J4-_A_-RJ servo amplifier capacity: For 100 W, 200 W	Used for primary replacement and simultaneous replacement.
2		SC-J2SCPJ4KT06K	MR-J4-_A_-RJ servo amplifier capacity: For 400 W, 600 W	
3		SC-J2SCPJ4KT1K	MR-J4-_A-RJ servo amplifier capacity: For 700 W, 1 kW	
4		SC-J2SCPJ4KT3K	MR-J4-_A-RJ servo amplifier capacity: For 2 kW, 3.5 kW	
5		SC-J2SCPJ4KT5K	MR-J4-_A-RJ servo amplifier capacity: For 5 kW	
6		SC-J2SCPJ4KT7K	MR-J4-_A-RJ servo amplifier capacity: For 7 kW	
7	Servo amplifier side conversion cable set	SC-J2SCPJ4CSET-01	Control signal conversion cable (SC-J2SCPJ4CTC03M)	
			Encoder conversion cable (SC-J2SJ4ENC03M)	
			Monitor conversion cable (SC-J2SJ4MOC03M)	
			24 V DC connector cable (SC-J2SJ4CTPWC5M)	

(4) Common (Motor side conversion cable)

No.	Product name	Model	Application	Replacement method
1	Power supply conversion Cable	SC-J2SJ4PW1C03M-A1	For HC-KFS, HC-MFS → HG-KR, HG-MR, Load side	Used for secondary replacement and simultaneous replacement.
2		SC-J2SJ4PW1C03M-A2	For HC-KFS, HC-MFS → HG-KR, HG-MR, Opposite to load side	
3		SC-J2SJ4PWBK1C03M-A1	For HC-KFS, HC-MFS → HG-KR, HG-MR, Load side (With brake)	
4		SC-J2SJ4PWBK1C03M-A2	For HC-KFS, HC-MFS → HG-KR, HG-MR, Opposite to load side (With brake)	
5		SC-SAJ3PW2KC1M-S2	For HC-SFS → HG-SR	
6		SC-HAJ3PW1C1M		
7		SC-J2SJ4PW2C1M	For HC-RFS203 with reducer → HG-SR202 with reducer	
8		SC-J2SJ4PW3C1M-■	For HA-LFS11K1M/15K1M → HG-JR11K1M/15K1M	
9	Encoder Conversion cable	SC-HAJ3ENM1C03M-A1	For HC-KFS, HC-MFS → HG-KR, HG-MR, Load side	
10		SC-HAJ3ENM1C03M-A2	For HC-KFS, HC-MFS → HG-KR, HG-MR, Opposite to load side	
11		SC-HAJ3ENM3C1M	For HC-SFS → HG-SR	
12	Brake conversion Cable	SC-BKC1CBL□M-L	For HC-SFS → HG-SR	
13	Cooling fan Conversion cable	SC-J2SJ4FAN1C1M	For HA-LFS → HG-JR	

(5) Mounting attachment (Note 1, 2, 3)

No.	Product name	Model	Application	Replacement method
1	Mounting attachment	SC-J2SJ4BS01	MR-J4-_A servo amplifier capacity: For 700 W, 1 kW MR-J4-_B-RJ020 servo amplifier capacity: For 700 W, 1 kW	Used for primary replacement and simultaneous replacement.
2		SC-J2SJ4BS02	MR-J4-_A4 servo amplifier capacity: For 600 W, 1 kW MR-J4-_B4- RJ020 servo amplifier capacity: For 600 W, 1 kW	
3		SC-J2SJ4BS03	MR-J4-_A servo amplifier capacity: For 2 kW, 3.5 kW MR-J4-_B4-RJ020 servo amplifier capacity: For 2 kW, 3.5 kW	
4			MR-J4-_A4 servo amplifier capacity: For 2 kW MR-J4-_B4-RJ020 servo amplifier capacity: For 2 kW	
5		SC-J2SJ4BS04	MR-J4-_A servo amplifier capacity: For 5 kW MR-J4-_B-RJ020 servo amplifier capacity: For 5 kW	
6			MR-J4-_A4 servo amplifier For 3.5 kW MR-J4-_B4-RJ020 servo amplifier For 3.5 kW	
7		SC-J2SJ4BS05	MR-J4-_A servo amplifier capacity: For 7 kW MR-J4-_B-RJ020 servo amplifier capacity: For 7 kW	
8			MR-J4-_A4 servo amplifier capacity: For 7 kW MR-J4-_B4-RJ020 servo amplifier capacity: For 7 kW	
9		SC-J2SJ4BS06	MR-J4-_A servo amplifier capacity: For 11 kW, 15 kW MR-J4-_B-RJ020 servo amplifier capacity: For 11 kW, 15 kW	
10			MR-J4-_A4 servo amplifier capacity: For 11 kW, 15 kW MR-J4-_B4-RJ020 servo amplifier capacity: For 11 kW, 15 kW	
11		SC-J2SJ4BS07	MR-J4-_A servo amplifier capacity: For 22 kW MR-J4-_B-RJ020 servo amplifier capacity: For 22 kW	
12			MR-J4-_A4 servo amplifier capacity: For 22 kW MR-J4-_B4-RJ020 servo amplifier capacity: For 22 kW	
13		SC-J2SJ4BS08	MR-J4-_A4 servo amplifier capacity: For 30 kW MR-J4-_B4-RJ020 servo amplifier capacity: For 30 kW	
14		SC-J2SJ4BS09	MR-J4-_A servo amplifier capacity: For 30 kW, 37 kW MR-J4-_B-RJ020 servo amplifier capacity: For 30 kW, 37 kW	
15			MR-J4-_A4 servo amplifier capacity: For 37 kW, 45 kW, 55 kW MR-J4-_B4-RJ020 servo amplifier capacity: For 37 kW, 45 kW, 55 kW	

Note 1. When replacing a servo amplifier of 400 V class, a mounting attachment compatible with its servo amplifier capacity is required to be purchased. Even when replacing a servo amplifier of 200 V/100 V class, if a conversion terminal block is not required, a mounting attachment also is available.

2. A conversion cable on the servo amplifier side is not supplied with the mounting attachment and required to be purchased separately.

3. Since the MR-J2S-500_4 servo amplifier and the MR-J4-500_4 servo amplifier have mounting compatibility, no mounting attachment is supplied with them.

3. BASIC CONFIGURATION

[Before replacement]

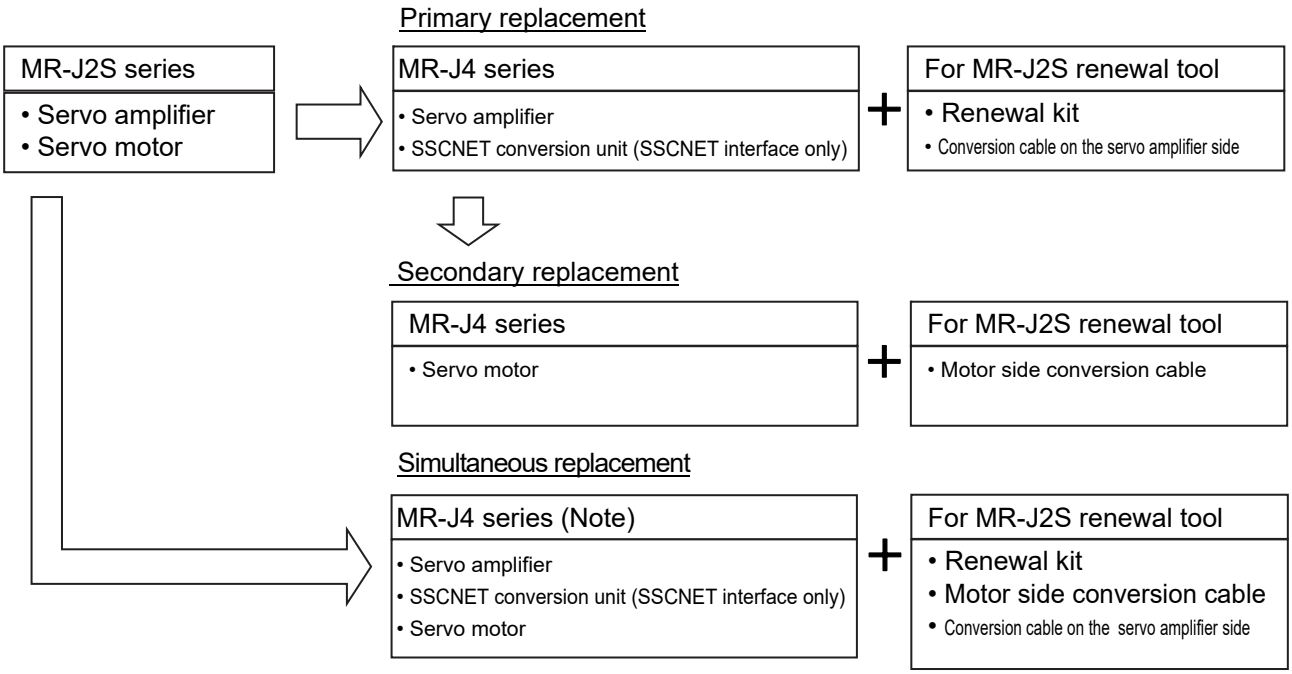

Note. MR-J4 series servo amplifier and servo motor are required to be purchased separately.

3.1 Important Points to Note When Replacing

(1) Please note that replacement may not be possible when multiple units are set in a line due to the clearance between the servo amplifiers, the model, and the number of units. (Refer to Chapter 8 of this Appendix regarding the dimensions)
(2) Depending on the condition of the existing setup, sometimes noise reduction techniques are necessary when replacing.
(3) When using the existing cables, please consider the remaining life of the cables. If deterioration is significant, replacing with a new cable is recommended.
(4) Because the conversion cable does not have a long bending life, fix the cable when using.
(5) Contact us if using an encoder cable longer than 50 m with long distance wiring. (For secondary and simultaneous replacement) Contact us when replacing with an HG-KR or MR motor if the existing encoder cable is longer than 30 m.
(6) No oil seal is attached to the standard type MR-J4 servo motor. Take care when selecting if the existing MR-J2S servo motor has an attached oil seal. Contact a sales representative if a servo motor with an oil seal is required.
(7) Depending on machine conditions (inertia, load, etc.), there is a possibility of insufficient servo amplifier capacity after replacement. Carefully consider the capacity in relation to the replacement.
(8) Although use of dynamic brake resistance standardly equipped to the replacement MR-J4 servo amplifier is possible, take care because the coasting distance differs depending on the characteristics of the dynamic brake. In addition, do not use dynamic braking at high frequencies.
(9) Check Part 9 of this document for important points to note when using optional or peripheral equipment.
(10) Contact a sales representative if the existing MR-J2S servo amplifier or servo motor is a special product.
(11) Although the servo motor model of the MR-J2S-series servo motor may not be displayed properly with MR Configurator2, this is normal. Do not use the MR Configurator2 advanced functions (machine analyzer, gain search, machine simulation, etc.) because they do not work accurately.

3.2 Selection of Products

3.2.1 Replacement selection flow

⚠ CAUTION	●Because some existing HC-KFS46, HC-KFS410, HC-RFS, HC-LFS and HA-LFS series servo motors differ in primary replacement servo amplifiers and secondary/simultaneous replacement servo amplifiers, the selection method may differ from the following flow.

(1) Replacement selection flow
(For existing servo motors other than HC-KFS46, HC-KFS410, HC-RFS, HC-LFS and HA-LFS series)

1) Primary replacement menu

Check the combination of the existing models.

↓

Select the primary replacement model servo amplifier from column 2 of the replacement combination list in Section 4.1 to 4.5.

↓

Select the renewal kit from column 3 of the replacement combination list in Section 4.1 to 4.5.

2) Secondary replacement menu

Check the combination of the existing servo motor model or of the existing models.

↓

Select the secondary replacement models from column 2 and 4 of the replacement combination list in Section 4.1 to 4.5.

↓

Select the renewal kit from column 3 and the motor side conversion cable from column 5 of the replacement combination list in Section 4.1 to 4.5.

3) Simultaneous replacement menu

Check the combination of the existing models.

↓

Select the simultaneous replacement models from column 2 and 4 of the replacement combination list in Section 4.1 to 4.5.

↓

Select the renewal kit from column 3 and the motor side conversion cable from column 5 of the replacement combination list in Section 4.1 to 4.5.

(2) Replacement selection flow

(For existing HC-KFS46, HC-KFS410, HC-RFS, HC-LFS and HA-LFS series servo motors)

1) Primary replacement menu

Check the combination of the existing models.

↓

Select the primary replacement model servo amplifier from column 2 of the replacement combination list in Section 4.1 to 4.5.

↓

Select the renewal kit from column 3 of the replacement combination list in Section 4.1 to 4.5.

2) Secondary replacement menu

Check the combination of the existing servo motor model or of the existing models.

↓

Select the secondary replacement models from column 4 and 5 of the replacement combination list in Section 4.1 to 4.5.

↓

Select the renewal kit from column 6 and the motor side conversion cable from column 7 of the replacement combination list in Section 4.1 to 4.5.

3) Simultaneous replacement menu

Check the combination of the existing models.

↓

Select the simultaneous replacement models from column 4 and 5 of the replacement combination list in Section 4.1 to 4.5.

↓

Select the renewal kit from column 6 and the motor side conversion cable from column 7 of the replacement combination list in Section 4.1 to 4.5.

4. REPLACMENT COMBINATION LIST

4.1 General-Purpose Interface Replacement Combination List (100 V/200 V Class)

(1) Existing HC-KFS motor series (standard/with brake, G1, G2 reducer)

○: Compatible; △: Limited functions or compatible with certain conditions; ×: Incompatible

(1)		(2)	(3)	(4)		(5)		
Existing model (Note 13)		Primary/secondary/simultaneous replacement models (Note 5, 14)		Secondary replacement/simultaneous replacement models				
						Motor side conversion cable model		
Servo amplifier model	Servo motor model	Servo amplifier model (Note 1, 12)	Renewal kit model	Servo motor model (Note 1)	Compatibility	Power supply conversion cable	Encoder conversion cable	Brake conversion cable
[Small capacity/low inertia HC-KFS series, standard/with brake] ((B) represents models with brake)								
MR-J2S-10A(1)	HC-KFS053(B)	MR-J4-10A(1)	SC-J2SJ4KT02K	HG-KR053(B)	△ (Note 4)	Without brake: SC-J2SJ4PW1C03M-■ With brake: SC-J2SJ4PWBK1C03M-■	SC-HAJ3ENM1C03M-■	Built in to power supply conversion cable.
	HC-KFS13(B)			HG-KR13(B)				
MR-J2S-20A(1)	HC-KFS23(B)	MR-J4-20A(1)		HG-KR23(B)				
MR-J2S-40A(1)	HC-KFS43(B)	MR-J4-40A(1)	SC-J2SJ4KT06K	HG-KR43(B)				
MR-J2S-70A	HC-KFS73(B)	MR-J4-70A	SC-J2SJ4KT1K	HG-KR73(B)				
[Small capacity/low inertia HC-KFS series with general reducer (G1)] ((B) represents models with brake)								
MR-J2S-10A(1)	HC-KFS053(B)G1 1/5	MR-J4-10A(1)	SC-J2SJ4KT02K	HG-KR053(B)G1 1/5	△ (Note 4)	Without brake: SC-J2SJ4PW1C03M-■ With brake: SC-J2SJ4PWBK1C03M-■	SC-HAJ3ENM1C03M-■	Built in to power supply conversion cable.
	HC-KFS053(B)G1 1/12			HG-KR053(B)G1 1/12				
	HC-KFS053(B)G1 1/20			HG-KR053(B)G1 1/20				
	HC-KFS13(B)G1 1/5			HG-KR13(B)G1 1/5				
	HC-KFS13(B)G1 1/12			HG-KR13(B)G1 1/12				
	HC-KFS13(B)G1 1/20			HG-KR13(B)G1 1/20				
MR-J2S-20A(1)	HC-KFS23(B)G1 1/5	MR-J4-20A(1)		HG-KR23(B)G1 1/5				
	HC-KFS23(B)G1 1/12			HG-KR23(B)G1 1/12 (Note 2)				
	HC-KFS23(B)G1 1/20			HG-KR23(B)G1 1/20 (Note 2)				
MR-J2S-40A(1)	HC-KFS43(B)G1 1/5	MR-J4-40A(1)	SC-J2SJ4KT06K	HG-KR43(B)G1 1/5				
	HC-KFS43(B)G1 1/12			HG-KR43(B)G1 1/12 (Note 2)				
	HC-KFS43(B)G1 1/20			HG-KR43(B)G1 1/20 (Note 2)				
MR-J2S-70A	HC-KFS73(B)G1 1/5	MR-J4-70A	SC-J2SJ4KT1K	HG-KR73(B)G1 1/5				
	HC-KFS73(B)G1 1/12			HG-KR73(B)G1 1/12 (Note 2)				
	HC-KFS73(B)G1 1/20			HG-KR73(B)G1 1/20				
[Small capacity/low inertia HC-KFS series with high-precision reducer (G2)] ((B) represents models with brake)								
MR-J2S-10A(1)	HC-KFS053(B)G2 1/5	MR-J4-10A(1)	SC-J2SJ4KT02K	HG-KR053(B)G7 1/5	× (Note 3) (Note 4)	Without brake: SC-J2SJ4PW1C03M-■ With brake: SC-J2SJ4PWBK1C03M-■	SC-HAJ3ENM1C03M-■	Built in to power supply conversion cable.
	HC-KFS053(B)G2 1/9			HG-KR053(B)G7 1/11				
	HC-KFS053(B)G2 1/20			HG-KR053(B)G7 1/21				
	HC-KFS053(B)G2 1/29			HG-KR053(B)G7 1/33				
	HC-KFS13(B)G2 1/5			HG-KR13(B)G7 1/5				
	HC-KFS13(B)G2 1/9			HG-KR13(B)G7 1/11				
	HC-KFS13(B)G2 1/20			HG-KR13(B)G7 1/21				
	HC-KFS13(B)G2 1/29			HG-KR13(B)G7 1/33				
MR-J2S-20A(1)	HC-KFS23(B)G2 1/5	MR-J4-20A(1)		HG-KR23(B)G7 1/5				
	HC-KFS23(B)G2 1/9			HG-KR23(B)G7 1/11				
	HC-KFS23(B)G2 1/20			HG-KR23(B)G7 1/21				
	HC-KFS23(B)G2 1/29			HG-KR23(B)G7 1/33				
MR-J2S-40A(1)	HC-KFS43(B)G2 1/5	MR-J4-40A(1)	SC-J2SJ4KT06K	HG-KR43(B)G7 1/5				
	HC-KFS43(B)G2 1/9			HG-KR43(B)G7 1/11				
	HC-KFS43(B)G2 1/20			HG-KR43(B)G7 1/21				
	HC-KFS43(B)G2 1/29			HG-KR43(B)G7 1/33				
MR-J2S-70A	HC-KFS73(B)G2 1/5	MR-J4-70A	SC-J2SJ4KT1K	HG-KR73(B)G7 1/5				
	HC-KFS73(B)G2 1/9			HG-KR73(B)G7 1/11				
	HC-KFS73(B)G2 1/20			HG-KR73(B)G7 1/21				
	HC-KFS73(B)G2 1/29			HG-KR73(B)G7 1/33				

Refer to Appendix page 2-65 for important points to note.

(2) Existing HC-KFS motor series (G5, G7 reducer)

○: Compatible; △: Limited functions or compatible with certain conditions; ×: Incompatible

(1)		(2)	(3)	(4)		(5)		
Existing model (Note 13)		Primary/secondary/simultaneous replacement models (Note 5, 14)		Secondary replacement/simultaneous replacement models				
						Motor side conversion cable model		
Servo amplifier model	Servo motor model	Servo amplifier model (Note 1, 12)	Renewal kit model	Servo motor model (Note 1)	Compatibility	Power supply conversion cable	Encoder conversion cable	Brake conversion cable
[Small capacity/low inertia HC-KFS series with high-precision reducer, flange output type (G5)] ((B) represents models with brake)								
MR-J2S-10A(1)	HC-KFS053(B)G5 1/5	MR-J4-10A(1)	SC-J2SJ4KT02K	HG-KR053(B)G5 1/5	△ (Note 4)	Without brake: SC-J2SJ4PW1C03M-■ With brake: SC-J2SJ4PWBK1C03M-■	SC-HAJ3ENM1C03M-■	Built in to power supply conversion cable.
	HC-KFS053(B)G5 1/11			HG-KR053(B)G5 1/11				
	HC-KFS053(B)G5 1/21			HG-KR053(B)G5 1/21				
	HC-KFS053(B)G5 1/33			HG-KR053(B)G5 1/33				
	HC-KFS053(B)G5 1/45			HG-KR053(B)G5 1/45				
	HC-KFS13(B)G5 1/5			HG-KR13(B)G5 1/5				
	HC-KFS13(B)G5 1/11			HG-KR13(B)G5 1/11				
	HC-KFS13(B)G5 1/21			HG-KR13(B)G5 1/21				
	HC-KFS13(B)G5 1/33			HG-KR13(B)G5 1/33				
	HC-KFS13(B)G5 1/45			HG-KR13(B)G5 1/45				
MR-J2S-20A(1)	HC-KFS23(B)G5 1/5	MR-J4-20A(1)		HG-KR23(B)G5 1/5				
	HC-KFS23(B)G5 1/11			HG-KR23(B)G5 1/11				
	HC-KFS23(B)G5 1/21			HG-KR23(B)G5 1/21				
	HC-KFS23(B)G5 1/33			HG-KR23(B)G5 1/33				
	HC-KFS23(B)G5 1/45			HG-KR23(B)G5 1/45				
MR-J2S-40A(1)	HC-KFS43(B)G5 1/5	MR-J4-40A(1)	SC-J2SJ4KT06K	HG-KR43(B)G5 1/5				
	HC-KFS43(B)G5 1/11			HG-KR43(B)G5 1/11				
	HC-KFS43(B)G5 1/21			HG-KR43(B)G5 1/21				
	HC-KFS43(B)G5 1/33			HG-KR43(B)G5 1/33				
	HC-KFS43(B)G5 1/45			HG-KR43(B)G5 1/45				
MR-J2S-70A	HC-KFS73(B)G5 1/5	MR-J4-70A	SC-J2SJ4KT1K	HG-KR73(B)G5 1/5				
	HC-KFS73(B)G5 1/11			HG-KR73(B)G5 1/11				
	HC-KFS73(B)G5 1/21			HG-KR73(B)G5 1/21				
	HC-KFS73(B)G5 1/33			HG-KR73(B)G5 1/33				
	HC-KFS73(B)G5 1/45			HG-KR73(B)G5 1/45				
[Small capacity/low inertia HC-KFS series with high-precision reducer, shaft output type (G7)] ((B) represents models with brake)								
MR-J2S-10A(1)	HC-KFS053(B)G7 1/5	MR-J4-10A(1)	SC-J2SJ4KT02K	HG-KR053(B)G7 1/5	△ (Note 4)	Without brake: SC-J2SJ4PW1C03M-■ With brake: SC-J2SJ4PWBK1C03M-■	SC-HAJ3ENM1C03M-■	Built in to power supply conversion cable.
	HC-KFS053(B)G7 1/11			HG-KR053(B)G7 1/11				
	HC-KFS053(B)G7 1/21			HG-KR053(B)G7 1/21				
	HC-KFS053(B)G7 1/33			HG-KR053(B)G7 1/33				
	HC-KFS053(B)G7 1/45			HG-KR053(B)G7 1/45				
	HC-KFS13(B)G7 1/5			HG-KR13(B)G7 1/5				
	HC-KFS13(B)G7 1/11			HG-KR13(B)G7 1/11				
	HC-KFS13(B)G7 1/21			HG-KR13(B)G7 1/21				
	HC-KFS13(B)G7 1/33			HG-KR13(B)G7 1/33				
	HC-KFS13(B)G7 1/45			HG-KR13(B)G7 1/45				
MR-J2S-20A(1)	HC-KFS23(B)G7 1/5	MR-J4-20A(1)		HG-KR23(B)G7 1/5				
	HC-KFS23(B)G7 1/11			HG-KR23(B)G7 1/11				
	HC-KFS23(B)G7 1/21			HG-KR23(B)G7 1/21				
	HC-KFS23(B)G7 1/33			HG-KR23(B)G7 1/33				
	HC-KFS23(B)G7 1/45			HG-KR23(B)G7 1/45				
MR-J2S-40A(1)	HC-KFS43(B)G7 1/5	MR-J4-40A(1)	SC-J2SJ4KT06K	HG-KR43(B)G7 1/5				
	HC-KFS43(B)G7 1/11			HG-KR43(B)G7 1/11				
	HC-KFS43(B)G7 1/21			HG-KR43(B)G7 1/21				
	HC-KFS43(B)G7 1/33			HG-KR43(B)G7 1/33				
	HC-KFS43(B)G7 1/45			HG-KR43(B)G7 1/45				
MR-J2S-70A	HC-KFS73(B)G7 1/5	MR-J4-70A	SC-J2SJ4KT1K	HG-KR73(B)G7 1/5				
	HC-KFS73(B)G7 1/11			HG-KR73(B)G7 1/11				
	HC-KFS73(B)G7 1/21			HG-KR73(B)G7 1/21				
	HC-KFS73(B)G7 1/33			HG-KR73(B)G7 1/33				
	HC-KFS73(B)G7 1/45			HG-KR73(B)G7 1/45				

Refer to Appendix page 2-65 for important points to note.

(3) Existing HC-KFS46, KFS410 motor

○: Compatible; △: Limited functions or compatible with certain conditions; ×: Incompatible

(1)		(2)	(3)	(4)	(5)		(6)	(7)		
Existing model (Note 13)		Primary replacement model (Note 5)		Secondary replacement/simultaneous replacement models						
								Motor side conversion cable model		
Servo amplifier model	Servo motor model	Servo amplifier model (Note 1, 12)	Renewal kit model	Servo amplifier model (Note 1)	Servo motor model (Note 1)	Compatibility	Renewalkit model	Power supply conversion cable	Encoder conversion cable	Brake conversion cable
[Small capacity/low inertia HC-KFS series, standard/with brake] ((B) represents models with brake)										
MR-J2S-70A	HC-KFS46 HC-KFS410	MR-J4-70A (Note 10)	SC-J2SJ4KT1K	MR-J4-40A (Note 10)	HG-KR43	△ (Note 4) (Note 15)	(Note 11)	Without brake: SC-J2SJ4PW1C03M-■ With brake: SC-J2SJ4PWBK1C03M-■	SC-HAJ3ENM1C03M-■	Built in to power supply conversion cable.

Refer to Appendix page 2-65 for important points to note.

(4) Existing HC-MFS motor series (standard/with brake, G1, G2 reducer)

○: Compatible; △: Limited functions or compatible with certain conditions; ×: Incompatible

(1)		(2)	(3)	(4)		(5)		
Existing model (Note 13)		Primary/secondary/simultaneous replacement models (Note 5, 14)		Secondary replacement/simultaneous replacement models				
						Motor side conversion cable model		
Servo amplifier model	Servo motor model	Servo amplifier model (Note 1, 12)	Renewal kit model	Servo motor model (Note 1)	Compatibility	Power supply conversion cable	Encoder conversion cable	Brake conversion cable
[Small capacity/ultra-low inertia HC-MFS series, standard/with brake] ((B) represents models with brake)								
MR-J2S-10A(1)	HC-MFS053(B)	MR-J4-10A(1)	SC-J2SJ4KT02K	HG-MR053(B)	○	Without brake: SC-J2SJ4PW1C03M-■ With brake: SC-J2SJ4PWBK1C03M-■	SC-HAJ3ENM1C03M-■	Built in to power supply conversion cable.
	HC-MFS13(B)			HG-MR13(B)				
MR-J2S-20A(1)	HC-MFS23(B)	MR-J4-20A(1)		HG-MR23(B)				
MR-J2S-40A(1)	HC-MFS43(B)	MR-J4-40A(1)	SC-J2SJ4KT06K	HG-MR43(B)				
MR-J2S-70A	HC-MFS73(B)	MR-J4-70A	SC-J2SJ4KT1K	HG-MR73(B)				
[Small capacity/ultra-low inertia HC-MFS series with general reducer (G1)] ((B) represents models with brake)								
MR-J2S-10A(1)	HC-MFS053(B)G1 1/5	MR-J4-10A(1)	SC-J2SJ4KT02K	HG-KR053(B)G1 1/5	△ (Note 4)	Without brake: SC-J2SJ4PW1C03M-■ With brake: SC-J2SJ4PWBK1C03M-■	SC-HAJ3ENM1C03M-■	Built in to power supply conversion cable.
	HC-MFS053(B)G1 1/12			HG-KR053(B)G1 1/12				
	HC-MFS053(B)G1 1/20			HG-KR053(B)G1 1/20				
	HC-MFS13(B)G1 1/5			HG-KR13(B)G1 1/5				
	HC-MFS13(B)G1 1/12			HG-KR13(B)G1 1/12				
	HC-MFS13(B)G1 1/20			HG-KR13(B)G1 1/20				
MR-J2S-20A(1)	HC-MFS23(B)G1 1/5	MR-J4-20A(1)		HG-KR23(B)G1 1/5				
	HC-MFS23(B)G1 1/12			HG-KR23(B)G1 1/12 (Note 2)				
	HC-MFS23(B)G1 1/20			HG-KR23(B)G1 1/20 (Note 2)				
MR-J2S-40A(1)	HC-MFS43(B)G1 1/5	MR-J4-40A(1)	SC-J2SJ4KT06K	HG-KR43(B)G1 1/5				
	HC-MFS43(B)G1 1/12			HG-KR43(B)G1 1/12 (Note 2)				
	HC-MFS43(B)G1 1/20			HG-KR43(B)G1 1/20 (Note 2)				
MR-J2S-70A	HC-MFS73(B)G1 1/5	MR-J4-70A	SC-J2SJ4KT1K	HG-KR73(B)G1 1/5				
	HC-MFS73(B)G1 1/12			HG-KR73(B)G1 1/12 (Note 2)				
	HC-MFS73(B)G1 1/20			HG-KR73(B)G1 1/20				
[Small capacity/ultra-low inertia HC-MFS series with high-precision reducer (G2)] ((B) represents models with brake)								
MR-J2S-10A(1)	HC-MFS053(B)G2 1/5	MR-J4-10A(1)	SC-J2SJ4KT02K	HG-KR053(B)G7 1/5	× (Note 3) (Note 4)	Without brake: SC-J2SJ4PW1C03M-■ With brake: SC-J2SJ4PWBK1C03M-■	SC-HAJ3ENM1C03M-■	Built in to power supply conversion cable.
	HC-MFS053(B)G2 1/9			HG-KR053(B)G7 1/11				
	HC-MFS053(B)G2 1/20			HG-KR053(B)G7 1/21				
	HC-MFS053(B)G2 1/29			HG-KR053(B)G7 1/33				
	HC-MFS13(B)G2 1/5			HG-KR13(B)G7 1/5				
	HC-MFS13(B)G2 1/9			HG-KR13(B)G7 1/11				
	HC-MFS13(B)G2 1/20			HG-KR13(B)G7 1/21				
	HC-MFS13(B)G2 1/29			HG-KR13(B)G7 1/33				
MR-J2S-20A(1)	HC-MFS23(B)G2 1/5	MR-J4-20A(1)		HG-KR23(B)G7 1/5				
	HC-MFS23(B)G2 1/9			HG-KR23(B)G7 1/11				
	HC-MFS23(B)G2 1/20			HG-KR23(B)G7 1/21				
	HC-MFS23(B)G2 1/29			HG-KR23(B)G7 1/33				
MR-J2S-40A(1)	HC-MFS43(B)G2 1/5	MR-J4-40A(1)	SC-J2SJ4KT06K	HG-KR43(B)G7 1/5				
	HC-MFS43(B)G2 1/9			HG-KR43(B)G7 1/11				
	HC-MFS43(B)G2 1/20			HG-KR43(B)G7 1/21				
	HC-MFS43(B)G2 1/29			HG-KR43(B)G7 1/33				
MR-J2S-70A	HC-MFS73(B)G2 1/5	MR-J4-70A	SC-J2SJ4KT1K	HG-KR73(B)G7 1/5				
	HC-MFS73(B)G2 1/9			HG-KR73(B)G7 1/11				
	HC-MFS73(B)G2 1/20			HG-KR73(B)G7 1/21				
	HC-MFS73(B)G2 1/29			HG-KR73(B)G7 1/33				

Refer to Appendix page 2-65 for important points to note.

(5) Existing HC-MFS motor series (G5, G7 reducer)

○: Compatible; △: Limited functions or compatible with certain conditions; ×: Incompatible

(1)		(2)	(3)	(4)		(5)		
Existing model (Note 13)		Primary/secondary/simultaneous replacement models (Note 5, 14)		Secondary replacement/simultaneous replacement models				
Servo amplifier model	Servo motor model	Servo amplifier model (Note 1, 12)	Renewal kit model	Servo motor model (Note 1)	Compatibility	Motor side conversion cable model: Power supply conversion cable	Motor side conversion cable model: Encoder conversion cable	Motor side conversion cable model: Brake conversion cable
[Small capacity/ultra-low inertia HC-MFS series with high-precision reducer, flange output type (G5)] ((B) represents models with brake)								
MR-J2S-10A(1)	HC-MFS053(B)G5 1/5	MR-J4-10A(1)	SC-J2SJ4KT02K	HG-KR053(B)G5 1/5	△ (Note 4)	Without brake: SC-J2SJ4PW1C03M-■ With brake: SC-J2SJ4PWBK1C03M-■	SC-HAJ3ENM1C03M-■	Built in to power supply conversion cable.
	HC-MFS053(B)G5 1/11			HG-KR053(B)G5 1/11				
	HC-MFS053(B)G5 1/21			HG-KR053(B)G5 1/21				
	HC-MFS053(B)G5 1/33			HG-KR053(B)G5 1/33				
	HC-MFS053(B)G5 1/45			HG-KR053(B)G5 1/45				
	HC-MFS13(B)G5 1/5			HG-KR13(B)G5 1/5				
	HC-MFS13(B)G5 1/11			HG-KR13(B)G5 1/11				
	HC-MFS13(B)G5 1/21			HG-KR13(B)G5 1/21				
	HC-MFS13(B)G5 1/33			HG-KR13(B)G5 1/33				
	HC-MFS13(B)G5 1/45			HG-KR13(B)G5 1/45				
MR-J2S-20A(1)	HC-MFS23(B)G5 1/5	MR-J4-20A(1)		HG-KR23(B)G5 1/5				
	HC-MFS23(B)G5 1/11			HG-KR23(B)G5 1/11				
	HC-MFS23(B)G5 1/21			HG-KR23(B)G5 1/21				
	HC-MFS23(B)G5 1/33			HG-KR23(B)G5 1/33				
	HC-MFS23(B)G5 1/45			HG-KR23(B)G5 1/45				
MR-J2S-40A(1)	HC-MFS43(B)G5 1/5	MR-J4-40A(1)	SC-J2SJ4KT06K	HG-KR43(B)G5 1/5				
	HC-MFS43(B)G5 1/11			HG-KR43(B)G5 1/11				
	HC-MFS43(B)G5 1/21			HG-KR43(B)G5 1/21				
	HC-MFS43(B)G5 1/33			HG-KR43(B)G5 1/33				
	HC-MFS43(B)G5 1/45			HG-KR43(B)G5 1/45				
MR-J2S-70A	HC-MFS73(B)G5 1/5	MR-J4-70A	SC-J2SJ4KT1K	HG-KR73(B)G5 1/5				
	HC-MFS73(B)G5 1/11			HG-KR73(B)G5 1/11				
	HC-MFS73(B)G5 1/21			HG-KR73(B)G5 1/21				
	HC-MFS73(B)G5 1/33			HG-KR73(B)G5 1/33				
	HC-MFS73(B)G5 1/45			HG-KR73(B)G5 1/45				
[Small capacity/low inertia HC-MFS series with high-precision reducer, shaft output type (G7)] ((B) represents models with brake)								
MR-J2S-10A(1)	HC-MFS053(B)G7 1/5	MR-J4-10A(1)	SC-J2SJ4KT02K	HG-KR053(B)G7 1/5	△ (Note 4)	Without brake: SC-J2SJ4PW1C03M-■ With brake: SC-J2SJ4PWBK1C03M-■	SC-HAJ3ENM1C03M-■	Built in to power supply conversion cable.
	HC-MFS053(B)G7 1/11			HG-KR053(B)G7 1/11				
	HC-MFS053(B)G7 1/21			HG-KR053(B)G7 1/21				
	HC-MFS053(B)G7 1/33			HG-KR053(B)G7 1/33				
	HC-MFS053(B)G7 1/45			HG-KR053(B)G7 1/45				
	HC-MFS13(B)G7 1/5			HG-KR13(B)G7 1/5				
	HC-MFS13(B)G7 1/11			HG-KR13(B)G7 1/11				
	HC-MFS13(B)G7 1/21			HG-KR13(B)G7 1/21				
	HC-MFS13(B)G7 1/33			HG-KR13(B)G7 1/33				
	HC-MFS13(B)G7 1/45			HG-KR13(B)G7 1/45				
MR-J2S-20A(1)	HC-MFS23(B)G7 1/5	MR-J4-20A(1)		HG-KR23(B)G7 1/5				
	HC-MFS23(B)G7 1/11			HG-KR23(B)G7 1/11				
	HC-MFS23(B)G7 1/21			HG-KR23(B)G7 1/21				
	HC-MFS23(B)G7 1/33			HG-KR23(B)G7 1/33				
	HC-MFS23(B)G7 1/45			HG-KR23(B)G7 1/45				
MR-J2S-40A(1)	HC-MFS43(B)G7 1/5	MR-J4-40A(1)	SC-J2SJ4KT06K	HG-KR43(B)G7 1/5				
	HC-MFS43(B)G7 1/11			HG-KR43(B)G7 1/11				
	HC-MFS43(B)G7 1/21			HG-KR43(B)G7 1/21				
	HC-MFS43(B)G7 1/33			HG-KR43(B)G7 1/33				
	HC-MFS43(B)G7 1/45			HG-KR43(B)G7 1/45				
MR-J2S-70A	HC-MFS73(B)G7 1/5	MR-J4-70A	SC-J2SJ4KT1K	HG-KR73(B)G7 1/5				
	HC-MFS73(B)G7 1/11			HG-KR73(B)G7 1/11				
	HC-MFS73(B)G7 1/21			HG-KR73(B)G7 1/21				
	HC-MFS73(B)G7 1/33			HG-KR73(B)G7 1/33				
	HC-MFS73(B)G7 1/45			HG-KR73(B)G7 1/45				

Refer to Appendix page 2-65 for important points to note.

(6) Existing HC-SFS motor series (standard/with brake, G2 reducer)

○: Compatible; △: Limited functions or compatible with certain conditions; ×: Incompatible

(1)		(2)	(3)	(4)		(5)		
Existing model (Note 13)		Primary/secondary/simultaneous replacement models (Note 5, 14)		Secondary replacement/simultaneous replacement models				
						Motor side conversion cable model		
Servo amplifier model	Servo motor model	Servo amplifier model (Note 1, 12)	Renewal kit model	Servo motor model (Note 1)	Compatibility	Power supply conversion cable	Encoder conversion cable	Brake conversion cable
[Medium capacity/medium inertia HC-SFS series, standard/with brake] ((B) represents models with brake)								
MR-J2S-60A	HC-SFS52(B)	MR-J4-60A	SC-J2SJ4KT06K	HG-SR52(B)	△ (Note 6)	SC-SAJ3PW2KC1M-S2	SC-HAJ3ENM3C1M	(Note 7)
	HC-SFS53(B)							
MR-J2S-100A	HC-SFS81(B)	MR-J4-100A	SC-J2SJ4KT1K	HG-SR81(B)				
	HC-SFS102(B)			HG-SR102(B)				
	HC-SFS103(B)							
MR-J2S-200A	HC-SFS121(B)	MR-J4-200A	SC-J2SJ4KT3K	HG-SR121(B)		SC-HAJ3PW1C1M		
	HC-SFS152(B)			HG-SR152(B)		SC-SAJ3PW2KC1M-S2		
	HC-SFS153(B)							
	HC-SFS201(B)			HG-SR201(B)		SC-HAJ3PW1C1M		
	HC-SFS202(B)			HG-SR202(B)				
	HC-SFS203(B)							
MR-J2S-350A	HC-SFS301(B)	MR-J4-350A		HG-SR301(B)				
	HC-SFS352(B)			HG-SR352(B)				
	HC-SFS353(B)							
MR-J2S-500A	HC-SFS502(B)	MR-J4-500A	SC-J2SJ4KT5K	HG-SR502(B)				
MR-J2S-700A	HC-SFS702(B)	MR-J4-700A	SC-J2SJ4KT7K	HG-SR702(B)		Existing cable can be used.		
[Medium capacity/medium inertia HC-SFS series with high-precision reducer (G2)] ((B) represents models with brake)								
MR-J2S-60A	HC-SFS52(B)G2 1/5	MR-J4-60A	SC-J2SJ4KT06K	HG-SR52(B)G7 1/5	× (Note 3) (Note 6)	SC-SAJ3PW2KC1M-S2	SC-HAJ3ENM3C1M	(Note 7)
	HC-SFS52(B)G2 1/9			HG-SR52(B)G7 1/11				
	HC-SFS52(B)G2 1/20			HG-SR52(B)G7 1/21				
	HC-SFS52(B)G2 1/29			HG-SR52(B)G7 1/33				
	HC-SFS52(B)G2 1/45			HG-SR52(B)G7 1/45				
MR-J2S-100A	HC-SFS102(B)G2 1/5	MR-J4-100A	SC-J2SJ4KT1K	HG-SR102(B)G7 1/5				
	HC-SFS102(B)G2 1/9			HG-SR102(B)G7 1/11				
	HC-SFS102(B)G2 1/20			HG-SR102(B)G7 1/21				
	HC-SFS102(B)G2 1/29			HG-SR102(B)G7 1/33				
	HC-SFS102(B)G2 1/45			HG-SR102(B)G7 1/45				
MR-J2S-200A	HC-SFS152(B)G2 1/5	MR-J4-200A	SC-J2SJ4KT3K	HG-SR152(B)G7 1/5				
	HC-SFS152(B)G2 1/9			HG-SR152(B)G7 1/11				
	HC-SFS152(B)G2 1/20			HG-SR152(B)G7 1/21				
	HC-SFS152(B)G2 1/29			HG-SR152(B)G7 1/33				
	HC-SFS152(B)G2 1/45			HG-SR152(B)G7 1/45				
	HC-SFS202(B)G2 1/5			HG-SR202(B)G7 1/5		SC-HAJ3PW1C1M		
	HC-SFS202(B)G2 1/9			HG-SR202(B)G7 1/11				
	HC-SFS202(B)G2 1/20			HG-SR202(B)G7 1/21				
	HC-SFS202(B)G2 1/29			HG-SR202(B)G7 1/33				
	HC-SFS202(B)G2 1/45			HG-SR202(B)G7 1/45				
MR-J2S-350A	HC-SFS352(B)G2 1/5	MR-J4-350A		HG-SR352(B)G7 1/5				
	HC-SFS352(B)G2 1/9			HG-SR352(B)G7 1/11				
	HC-SFS352(B)G2 1/20			HG-SR352(B)G7 1/21				
MR-J2S-500A	HC-SFS502(B)G2 1/5	MR-J4-500A	SC-J2SJ4KT5K	HG-SR502(B)G7 1/5				
	HC-SFS502(B)G2 1/9			HG-SR502(B)G7 1/11				
MR-J2S-700A	HC-SFS702(B)G2 1/5	MR-J4-700A	SC-J2SJ4KT7K	HG-SR702(B)G7 1/5		Existing cable can be used.		

Refer to Appendix page 2-65 for important points to note.

(7) Existing HC-SFS motor series (G1 reducer)

○: Compatible; △: Limited functions or compatible with certain conditions; ×: Incompatible

(1)		(2)	(3)	(4)		(5)		
Existing model (Note 13)		Primary/secondary/simultaneous replacement models (Note 5, 14)		Secondary replacement/simultaneous replacement models				
						Motor side conversion cable model		
Servo amplifier model	Servo motor model	Servo amplifier model (Note 1, 12)	Renewal kit model	Servo motor model (Note 1)	Compatibility	Power supply conversion cable	Encoder conversion cable	Brake conversion cable
[Medium capacity/medium inertia HC-SFS series with general reducer (G1)] ((B) represents models with brake, (H) represents foot-mounting)								
MR-J2S-60A	HC-SFS52(B)G1(H) 1/6	MR-J4-60A	SC-J2SJ4KT06K	HG-SR52(B)G1(H) 1/6	△ (Note 6)	SC-SAJ3PW2KC1M-S2	SC-HAJ3ENM3C1M	(Note 7)
	HC-SFS52(B)G1(H) 1/11			HG-SR52(B)G1(H) 1/11				
	HC-SFS52(B)G1(H) 1/17			HG-SR52(B)G1(H) 1/17				
	HC-SFS52(B)G1(H) 1/29			HG-SR52(B)G1(H) 1/29				
	HC-SFS52(B)G1(H) 1/35			HG-SR52(B)G1(H) 1/35				
	HC-SFS52(B)G1(H) 1/43			HG-SR52(B)G1(H) 1/43				
	HC-SFS52(B)G1(H) 1/59			HG-SR52(B)G1(H) 1/59				
MR-J2S-100A	HC-SFS102(B)G1(H) 1/6	MR-J4-100A	SC-J2SJ4KT1K	HG-SR102(B)G1(H) 1/6				
	HC-SFS102(B)G1(H) 1/11			HG-SR102(B)G1(H) 1/11				
	HC-SFS102(B)G1(H) 1/17			HG-SR102(B)G1(H) 1/17				
	HC-SFS102(B)G1(H) 1/29			HG-SR102(B)G1(H) 1/29				
	HC-SFS102(B)G1(H) 1/35			HG-SR102(B)G1(H) 1/35				
	HC-SFS102(B)G1(H) 1/43			HG-SR102(B)G1(H) 1/43				
	HC-SFS102(B)G1(H) 1/59			HG-SR102(B)G1(H) 1/59				
MR-J2S-200A	HC-SFS152(B)G1(H) 1/6	MR-J4-200A	SC-J2SJ4KT3K	HG-SR152(B)G1(H) 1/6				
	HC-SFS152(B)G1(H) 1/11			HG-SR152(B)G1(H) 1/11				
	HC-SFS152(B)G1(H) 1/17			HG-SR152(B)G1(H) 1/17				
	HC-SFS152(B)G1(H) 1/29			HG-SR152(B)G1(H) 1/29				
	HC-SFS152(B)G1(H) 1/35			HG-SR152(B)G1(H) 1/35				
	HC-SFS152(B)G1(H) 1/43			HG-SR152(B)G1(H) 1/43				
	HC-SFS152(B)G1(H) 1/59			HG-SR152(B)G1(H) 1/59				
	HC-SFS202(B)G1(H) 1/6			HG-SR202(B)G1(H) 1/6		SC-HAJ3PW1C1M		
	HC-SFS202(B)G1(H) 1/11			HG-SR202(B)G1(H) 1/11				
	HC-SFS202(B)G1(H) 1/17			HG-SR202(B)G1(H) 1/17				
	HC-SFS202(B)G1(H) 1/29			HG-SR202(B)G1(H) 1/29				
	HC-SFS202(B)G1(H) 1/35			HG-SR202(B)G1(H) 1/35				
	HC-SFS202(B)G1(H) 1/43			HG-SR202(B)G1(H) 1/43				
	HC-SFS202(B)G1(H) 1/59			HG-SR202(B)G1(H) 1/59				
MR-J2S-350A	HC-SFS352(B)G1(H) 1/6	MR-J4-350A		HG-SR352(B)G1(H) 1/6				
	HC-SFS352(B)G1(H) 1/11			HG-SR352(B)G1(H) 1/11				
	HC-SFS352(B)G1(H) 1/17			HG-SR352(B)G1(H) 1/17				
	HC-SFS352(B)G1(H) 1/29			HG-SR352(B)G1(H) 1/29				
	HC-SFS352(B)G1(H) 1/35			HG-SR352(B)G1(H) 1/35				
	HC-SFS352(B)G1(H) 1/43			HG-SR352(B)G1(H) 1/43				
	HC-SFS352(B)G1(H) 1/59			HG-SR352(B)G1(H) 1/59				
MR-J2S-500A	HC-SFS502(B)G1(H) 1/11	MR-J4-500A	SC-J2SJ4KT5K	HG-SR502(B)G1(H) 1/11				
	HC-SFS502(B)G1(H) 1/17			HG-SR502(B)G1(H) 1/17				
	HC-SFS502(B)G1(H) 1/29			HG-SR502(B)G1(H) 1/29				
	HC-SFS502(B)G1(H) 1/35			HG-SR502(B)G1(H) 1/35				
	HC-SFS502(B)G1(H) 1/43			HG-SR502(B)G1(H) 1/43				
MR-J2S-700A	HC-SFS702(B)G1(H) 1/11	MR-J4-700A	SC-J2SJ4KT7K	HG-SR702(B)G1(H) 1/11		Existing cable can be used.		
	HC-SFS702(B)G1(H) 1/17			HG-SR702(B)G1(H) 1/17				
	HC-SFS702(B)G1(H) 1/29			HG-SR702(B)G1(H) 1/29				
	HC-SFS702(B)G1(H) 1/35			HG-SR702(B)G1(H) 1/35				
	HC-SFS702(B)G1(H) 1/43			HG-SR702(B)G1(H) 1/43				

Refer to Appendix page 2-65 for important points to note.

(8) Existing HC-SFS motor series (G5, G7 reducer)

○: Compatible; △: Limited functions or compatible with certain conditions; ×: Incompatible

(1)		(2)	(3)	(4)		(5)		
Existing model (Note 13)		Primary/secondary/simultaneous replacement models (Note 5, 14)		Secondary replacement/simultaneous replacement models				
						Motor side conversion cable model		
Servo amplifier model	Servo motor model	Servo amplifier model (Note 1, 12)	Renewal kit model	Servo motor model (Note 1)	Compatibility	Power supply conversion cable	Encoder conversion cable	Brake conversion cable
[Medium capacity/medium inertia HC-SFS series with high-precision reducer, flange output type (G5)] ((B) represents models with brake)								
MR-J2S-60A	HC-SFS52(B)G5 1/5	MR-J4-60A	SC-J2SJ4KT06K	HG-SR52(B)G5 1/5	△ (Note 6)	SC-SAJ3PW2KC1M-S2	SC-HAJ3ENM3C1M	(Note 7)
	HC-SFS52(B)G5 1/11			HG-SR52(B)G5 1/11				
	HC-SFS52(B)G5 1/21			HG-SR52(B)G5 1/21				
	HC-SFS52(B)G5 1/33			HG-SR52(B)G5 1/33				
	HC-SFS52(B)G5 1/45			HG-SR52(B)G5 1/45				
MR-J2S-100A	HC-SFS102(B)G5 1/5	MR-J4-100A	SC-J2SJ4KT1K	HG-SR102(B)G5 1/5				
	HC-SFS102(B)G5 1/11			HG-SR102(B)G5 1/11				
	HC-SFS102(B)G5 1/21			HG-SR102(B)G5 1/21				
	HC-SFS102(B)G5 1/33			HG-SR102(B)G5 1/33				
	HC-SFS102(B)G5 1/45			HG-SR102(B)G5 1/45				
MR-J2S-200A	HC-SFS152(B)G5 1/5	MR-J4-200A	SC-J2SJ4KT3K	HG-SR152(B)G5 1/5				
	HC-SFS152(B)G5 1/11			HG-SR152(B)G5 1/11				
	HC-SFS152(B)G5 1/21			HG-SR152(B)G5 1/21				
	HC-SFS152(B)G5 1/33			HG-SR152(B)G5 1/33				
	HC-SFS152(B)G5 1/45			HG-SR152(B)G5 1/45				
	HC-SFS202(B)G5 1/5			HG-SR202(B)G5 1/5		SC-HAJ3PW1C1M		
	HC-SFS202(B)G5 1/11			HG-SR202(B)G5 1/11				
	HC-SFS202(B)G5 1/21			HG-SR202(B)G5 1/21				
	HC-SFS202(B)G5 1/33			HG-SR202(B)G5 1/33				
	HC-SFS202(B)G5 1/45			HG-SR202(B)G5 1/45				
MR-J2S-350A	HC-SFS352(B)G5 1/5	MR-J4-350A		HG-SR352(B)G5 1/5				
	HC-SFS352(B)G5 1/11			HG-SR352(B)G5 1/11				
	HC-SFS352(B)G5 1/21			HG-SR352(B)G5 1/21				
MR-J2S-500A	HC-SFS502(B)G5 1/5	MR-J4-500A	SC-J2SJ4KT5K	HG-SR502(B)G5 1/5				
	HC-SFS502(B)G5 1/11			HG-SR502(B)G5 1/11				
MR-J2S-700A	HC-SFS702(B)G5 1/5	MR-J4-700A	SC-J2SJ4KT7K	HG-SR702(B)G5 1/5		Existing cable can be used.		
[Medium capacity/medium inertia HC-SFS series with high-precision reducer, shaft output type (G7)] ((B) represents models with brake)								
MR-J2S-60A	HC-SFS52(B)G7 1/5	MR-J4-60A	SC-J2SJ4KT06K	HG-SR52(B)G7 1/5	△ (Note 6)	SC-SAJ3PW2KC1M-S2	SC-HAJ3ENM3C1M	(Note 7)
	HC-SFS52(B)G7 1/11			HG-SR52(B)G7 1/11				
	HC-SFS52(B)G7 1/21			HG-SR52(B)G7 1/21				
	HC-SFS52(B)G7 1/33			HG-SR52(B)G7 1/33				
	HC-SFS52(B)G7 1/45			HG-SR52(B)G7 1/45				
MR-J2S-100A	HC-SFS102(B)G7 1/5	MR-J4-100A	SC-J2SJ4KT1K	HG-SR102(B)G7 1/5				
	HC-SFS102(B)G7 1/11			HG-SR102(B)G7 1/11				
	HC-SFS102(B)G7 1/21			HG-SR102(B)G7 1/21				
	HC-SFS102(B)G7 1/33			HG-SR102(B)G7 1/33				
	HC-SFS102(B)G7 1/45			HG-SR102(B)G7 1/45				
MR-J2S-200A	HC-SFS152(B)G7 1/5	MR-J4-200A	SC-J2SJ4KT3K	HG-SR152(B)G7 1/5				
	HC-SFS152(B)G7 1/11			HG-SR152(B)G7 1/11				
	HC-SFS152(B)G7 1/21			HG-SR152(B)G7 1/21				
	HC-SFS152(B)G7 1/33			HG-SR152(B)G7 1/33				
	HC-SFS152(B)G7 1/45			HG-SR152(B)G7 1/45				
	HC-SFS202(B)G7 1/5			HG-SR202(B)G7 1/5		SC-HAJ3PW1C1M		
	HC-SFS202(B)G7 1/11			HG-SR202(B)G7 1/11				
	HC-SFS202(B)G7 1/21			HG-SR202(B)G7 1/21				
	HC-SFS202(B)G7 1/33			HG-SR202(B)G7 1/33				
	HC-SFS202(B)G7 1/45			HG-SR202(B)G7 1/45				
MR-J2S-350A	HC-SFS352(B)G7 1/5	MR-J4-350A		HG-SR352(B)G7 1/5				
	HC-SFS352(B)G7 1/11			HG-SR352(B)G7 1/11				
	HC-SFS352(B)G7 1/21			HG-SR352(B)G7 1/21				
MR-J2S-500A	HC-SFS502(B)G7 1/5	MR-J4-500A	SC-J2SJ4KT5K	HG-SR502(B)G7 1/5				
	HC-SFS502(B)G7 1/11			HG-SR502(B)G7 1/11				
MR-J2S-700A	HC-SFS702(B)G7 1/5	MR-J4-700A	SC-J2SJ4KT7K	HG-SR702(B)G7 1/5		Existing cable can be used.		

Refer to Appendix page 2-65 for important points to note.

(9) Existing HC-RFS motor series (standard/with brake, G2 reducer)

○: Compatible; △: Limited functions or compatible with certain conditions; ×: Incompatible

(1)		(2)	(3)	(4)	(5)		(6)	(7)		
Existing model (Note 13)		Primary replacement model (Note 5)		Secondary replacement/simultaneous replacement models						
Servo amplifier model	Servo motor model	Servo amplifier model (Note 1, 12)	Renewal kit model	Servo amplifier model (Note 1)	Servo motor model (Note 1)	Compatibility	Renewal kit model	Motor side conversion cable: Power supply conversion cable	Motor side conversion cable: Encoder conversion cable	Motor side conversion cable: Brake conversion cable
[Medium capacity/ultra-low inertia HC-RFS series, standard/with brake] ((B) represents models with brake)										
MR-J2S-200A	HC-RFS103(B)	MR-J4-200A	SC-J2SJ4KT3K	MR-J4-200A	HG-RR103(B)	○	SC-J2SJ4KT3K	Existing cable can be used.	SC-HAJ3ENM3C1M	Existing cable can be used.
	HC-RFS153(B)				HG-RR153(B)					
MR-J2S-350A	HC-RFS203(B)	MR-J4-350A		MR-J4-350A	HG-RR203(B)					
MR-J2S-500A	HC-RFS353(B)	MR-J4-500A	SC-J2SJ4KT5K	MR-J4-500A	HG-RR353(B)		SC-J2SJ4KT5K			
	HC-RFS503(B)				HG-RR503(B)					
[Medium capacity/ultra-low inertia HC-RFS series with high-precision reducer (G2)] ((B) represents models with brake)										
MR-J2S-200A	HC-RFS103(B)G2 1/5	MR-J4-200A (Note 10)	SC-J2SJ4KT3K	MR-J4-100A (Note 10)	HG-SR102(B)G7 1/5	× (Note 3) (Note 4)	(Note 11)	SC-SAJ3PW2KC1M-S2	SC-HAJ3ENM3C1M	(Note 7)
	HC-RFS103(B)G2 1/9				HG-SR102(B)G7 1/11					
	HC-RFS103(B)G2 1/20				HG-SR102(B)G7 1/21					
	HC-RFS103(B)G2 1/29				HG-SR102(B)G7 1/33					
	HC-RFS103(B)G2 1/45				HG-SR102(B)G7 1/45					
	HC-RFS153(B)G2 1/5	MR-J4-200A		MR-J4-200A	HG-SR152(B)G7 1/5		SC-J2SJ4KT3K			
	HC-RFS153(B)G2 1/9				HG-SR152(B)G7 1/11					
	HC-RFS153(B)G2 1/20				HG-SR152(B)G7 1/21					
	HC-RFS153(B)G2 1/29				HG-SR152(B)G7 1/33					
	HC-RFS153(B)G2 1/45				HG-SR152(B)G7 1/45					
MR-J2S-350A	HC-RFS203(B)G2 1/5	MR-J4-350A (Note 10)		MR-J4-200A (Note 10)	HG-SR202(B)G7 1/5			SC-J2SJ4PW2C1M		
	HC-RFS203(B)G2 1/9				HG-SR202(B)G7 1/11					
	HC-RFS203(B)G2 1/20				HG-SR202(B)G7 1/21					
	HC-RFS203(B)G2 1/29				HG-SR202(B)G7 1/33					
	HC-RFS203(B)G2 1/45				HG-SR202(B)G7 1/45					
MR-J2S-500A	HC-RFS353(B)G2 1/5	MR-J4-500A (Note 10)	SC-J2SJ4KT5K	MR-J4-350A (Note 10)	HG-SR352(B)G7 1/5		(Note 11)	SC-HAJ3PW1C1M		
	HC-RFS353(B)G2 1/9				HG-SR352(B)G7 1/11					
	HC-RFS353(B)G2 1/20				HG-SR352(B)G7 1/21					
	HC-RFS353(B)G2 1/29									
	HC-RFS503(B)G2 1/5	MR-J4-500A		MR-J4-500A	HG-SR502(B)G7 1/5		SC-J2SJ4KT5K			
	HC-RFS503(B)G2 1/9				HG-SR502(B)G7 1/11					
	HC-RFS503(B)G2 1/20									

Refer to Appendix page 2-65 for important points to note.

(10) Existing HC-RFS motor series (G5, G7 reducer)

○: Compatible; △: Limited functions or compatible with certain conditions; ×: Incompatible

(1)		(2)	(3)	(4)	(5)		(6)	(7)		
Existing model (Note 13)		Primary replacement model (Note 5)		Secondary replacement/simultaneous replacement models						
Servo amplifier model	Servo motor model	Servo amplifier model (Note 1, 12)	Renewal kit model	Servo amplifier model (Note 1)	Servo motor model (Note 1)	Compatibility	Renewal kit model	Motor side conversion cable: Power supply conversion cable	Motor side conversion cable: Encoder conversion cable	Motor side conversion cable: Brake conversion cable
[Medium capacity/ultra-low inertia HC-RFS series with high-precision reducer, flange output type (G5)] ((B) represents models with brake)										
MR-J2S-200A	HC-RFS103(B)G5 1/5	MR-J4-200A (Note 10)	SC-J2SJ4KT3K	MR-J4-100A (Note 10)	HG-SR102(B)G5 1/5	× (Note 3) (Note 4)	(Note 11)	SC-SAJ3PW2KC1M-S2	SC-HAJ3ENM3C1M	(Note 7)
	HC-RFS103(B)G5 1/11				HG-SR102(B)G5 1/11					
	HC-RFS103(B)G5 1/21				HG-SR102(B)G5 1/21					
	HC-RFS103(B)G5 1/33				HG-SR102(B)G5 1/33					
	HC-RFS103(B)G5 1/45				HG-SR102(B)G5 1/45					
	HC-RFS153(B)G5 1/5	MR-J4-200A		MR-J4-200A	HG-SR152(B)G5 1/5		SC-J2SJ4KT3K			
	HC-RFS153(B)G5 1/11				HG-SR152(B)G5 1/11					
	HC-RFS153(B)G5 1/21				HG-SR152(B)G5 1/21					
	HC-RFS153(B)G5 1/33				HG-SR152(B)G5 1/33					
	HC-RFS153(B)G5 1/45				HG-SR152(B)G5 1/45					
MR-J2S-350A	HC-RFS203(B)G5 1/5	MR-J4-350A (Note 10)		MR-J4-200A (Note 10)	HG-SR202(B)G5 1/5			SC-J2SJ4PW2C1M		
	HC-RFS203(B)G5 1/11				HG-SR202(B)G5 1/11					
	HC-RFS203(B)G5 1/21				HG-SR202(B)G5 1/21					
	HC-RFS203(B)G5 1/33				HG-SR202(B)G5 1/33					
	HC-RFS203(B)G5 1/45				HG-SR202(B)G5 1/45					
MR-J2S-500A	HC-RFS353(B)G5 1/5	MR-J4-500A (Note 10)	SC-J2SJ4KT5K	MR-J4-350A (Note 10)	HG-SR352(B)G5 1/5		(Note 11)	SC-HAJ3PW1C1M		
	HC-RFS353(B)G5 1/11				HG-SR352(B)G5 1/11					
	HC-RFS353(B)G5 1/21				HG-SR352(B)G5 1/21					
	HC-RFS353(B)G5 1/33									
	HC-RFS503(B)G5 1/5	MR-J4-500A		MR-J4-500A	HG-SR502(B)G5 1/5		SC-J2SJ4KT5K			
	HC-RFS503(B)G5 1/11				HG-SR502(B)G5 1/11					
	HC-RFS503(B)G5 1/21									
[Medium capacity/ultra-low inertia HC-RFS series with high-precision reducer, flange output type (G7)] ((B) represents models with brake)										
MR-J2S-200A	HC-RFS103(B)G7 1/5	MR-J4-200A (Note 10)	SC-J2SJ4KT3K	MR-J4-100A (Note 10)	HG-SR102(B)G7 1/5	× (Note 3) (Note 4)	(Note 11)	SC-SAJ3PW2KC1M-S2	SC-HAJ3ENM3C1M	(Note 7)
	HC-RFS103(B)G7 1/11				HG-SR102(B)G7 1/11					
	HC-RFS103(B)G7 1/21				HG-SR102(B)G7 1/21					
	HC-RFS103(B)G7 1/33				HG-SR102(B)G7 1/33					
	HC-RFS103(B)G7 1/45				HG-SR102(B)G7 1/45					
	HC-RFS153(B)G7 1/5	MR-J4-200A		MR-J4-200A	HG-SR152(B)G7 1/5		SC-J2SJ4KT3K			
	HC-RFS153(B)G7 1/11				HG-SR152(B)G7 1/11					
	HC-RFS153(B)G7 1/21				HG-SR152(B)G7 1/21					
	HC-RFS153(B)G7 1/33				HG-SR152(B)G7 1/33					
	HC-RFS153(B)G7 1/45				HG-SR152(B)G7 1/45					
MR-J2S-350A	HC-RFS203(B)G7 1/5	MR-J4-350A (Note 10)		MR-J4-200A (Note 10)	HG-SR202(B)G7 1/5			SC-J2SJ4PW2C1M		
	HC-RFS203(B)G7 1/11				HG-SR202(B)G7 1/11					
	HC-RFS203(B)G7 1/21				HG-SR202(B)G7 1/21					
	HC-RFS203(B)G7 1/33				HG-SR202(B)G7 1/33					
	HC-RFS203(B)G7 1/45				HG-SR202(B)G7 1/45					
MR-J2S-500A	HC-RFS353(B)G7 1/5	MR-J4-500A (Note 10)	SC-J2SJ4KT5K	MR-J4-350A (Note 10)	HG-SR352(B)G7 1/5		(Note 11)	SC-HAJ3PW1C1M		
	HC-RFS353(B)G7 1/11				HG-SR352(B)G7 1/11					
	HC-RFS353(B)G7 1/21				HG-SR352(B)G7 1/21					
	HC-RFS353(B)G7 1/33									
	HC-RFS503(B)G7 1/5	MR-J4-500A		MR-J4-500A	HG-SR502(B)G7 1/5		SC-J2SJ4KT5K			
	HC-RFS503(B)G7 1/11				HG-SR502(B)G7 1/11					
	HC-RFS503(B)G7 1/21									

Refer to Appendix page 2-65 for important points to note.

(11) Existing HC-UFS motor series

○: Compatible; △: Limited functions or compatible with certain conditions; ×: Incompatible

(1)		(2)	(3)	(4)		(5)		
Existing model (Note 13)		Primary/secondary/simultaneous replacement models (Note 5, 14)		Secondary replacement/simultaneous replacement models				
Servo amplifier model	Servo motor model	Servo amplifier model (Note 1, 12)	Renewal kit model	Servo motor model (Note 1)	Compatibility	Motor side conversion cable model: Power supply conversion cable	Encoder conversion cable	Brake conversion cable
[Medium capacity/flat type HC-UFS series, standard/with brake] ((B) represents models with brake)								
MR-J2S-70A	HC-UFS72(B)	MR-J4-70A	SC-J2SJ4KT1K	HG-UR72(B)	○	Existing cable can be used.	SC-HAJ3ENM3C1M	Existing cable can be used.
MR-J2S-200A	HC-UFS152(B)	MR-J4-200A	SC-J2SJ4KT3K	HG-UR152(B)				
MR-J2S-350A	HC-UFS202(B)	MR-J4-350A		HG-UR202(B)				
MR-J2S-500A	HC-UFS352(B)	MR-J4-500A	SC-J2SJ4KT5K	HG-UR352(B)				
	HC-UFS502(B)			HG-UR502(B)				
Small capacity/flat type HC-UFS series, standard/with brake] ((B) represents models with brake)								
MR-J2S-10A(1)	HC-UFS13(B)	MR-J4-10A(1)	SC-J2SJ4KT02K	HG-KR13(B)	× (Note 3)	Without brake: SC-J2SJ4PW1C03M-■ With brake: SC-J2SJ4PWBK1C03M-■	SC-HAJ3ENM1C03M-■	Built in to power supply conversion cable.
MR-J2S-20A(1)	HC-UFS23(B)	MR-J4-20A(1)		HG-KR23(B)				
MR-J2S-40A(1)	HC-UFS43(B)	MR-J4-40A(1)	SC-J2SJ4KT06K	HG-KR43(B)				
MR-J2S-70A	HC-UFS73(B)	MR-J4-70A	SC-J2SJ4KT1K	HG-KR73(B)				

Refer to Appendix page 2-65 for important points to note.

(12) Existing HC-LFS motor series

○: Compatible; △: Limited functions or compatible with certain conditions; ×: Incompatible

(1)		(2)	(3)	(4)	(5)		(6)	(7)		
Existing model (Note 13)		Primary replacement model (Note 5)		Secondary replacement/simultaneous replacement models						
Servo amplifier model	Servo motor model	Servo amplifier model (Note 1, 12)	Renewal kit model	Servo amplifier model (Note 1)	Servo motor model (Note 1)	Compatibility	Motor side conversion cable model: Renewal kit model	Power supply conversion cable	Encoder conversion cable	Brake conversion cable
[Medium capacity/low inertia HC-LFS series, standard/with brake] ((B) represents models with brake)										
MR-J2S-60A	HC-LFS52(B)	MR-J4-60A (Note 10)	SC-J2SJ4KT06K	MR-J4-70A (Note 10)	HG-JR73(B)	× (Note 3)	(Note 11)	SC-SAJ3PW2KC1M-S2	SC-HAJ3ENM3C1M	(Note 7)
MR-J2S-100A	HC-LFS102(B)	MR-J4-100A (Note 10)	SC-J2SJ4KT1K	MR-J4-200A (Note 10)	HG-JR153(B)					
MR-J2S-200A	HC-LFS152(B)	MR-J4-200A (Note 10)	SC-J2SJ4KT3K	MR-J4-350A (Note 10)	HG-JR353(B)		SC-J2SJ4KT3K	SC-J2SJ4PW2C1M		
MR-J2S-350A	HC-LFS202(B)	MR-J4-350A		MR-J4-350A				SC-HAJ3PW1C1M		
MR-J2S-500A	HC-LFS302(B)	MR-J4-500A	SC-J2SJ4KT5K	MR-J4-500A	HG-JR503(B)		SC-J2SJ4KT5K			

Refer to Appendix page 2-65 for important points to note.

(13) Existing HA-LFS motor series

○: Compatible; △: Limited functions or compatible with certain conditions; ×: Incompatible

(1)		(2)	(3)	(4)	(5)		(6)	(7)		
Existing model (Note 13)		Primary replacement model (Note 5)		Secondary replacement/simultaneous replacement models						
Servo amplifier model	Servo motor model	Servo amplifier model (Note 1, 12)	Renewal kit model	Servo amplifier model (Note 1)	Servo motor model (Note 1)	Compatibility	Renewal kit model	Motor side conversion cable model: Power supply conversion Cable	Motor side conversion cable model: Encoder Conversion cable	Motor side conversion cable model: Brake/Conversion cable for the cooling fan
[Medium/large capacity/low inertia HA-LFS 1000 r/min series, standard/with brake] ((B) represents models with brake)										
MR-J2S-700A	HA-LFS601(B)	(Note 16)		MR-J4-700A	HG-JR601(B) (Note 4)	× (Note 3)	SC-J2SJ4KT7K	SC-J2SJ4PW3C1M-■	Existing cable can be used.	• Existing brake cable can be used. • Cooling fan cable (Note 9)
MR-J2S-11KA	HA-LFS801(B)			MR-J4-11KA	HG-JR801(B) (Note 4)		SC-J2SJ4KT15K			
	HA-LFS12K1(B)				HG-JR12K1(B) (Note 4)					
MR-J2S-15KA	HA-LFS15K1			MR-J4-15KA	HG-JR15K1			(Note 8)	(Note 17)	• Cooling fan conversion cable SC-J2SJ4FAN1C1M
MR-J2S-22KA	HA-LFS20K1			MR-J4-22KA	HG-JR20K1		SC-J2SJ4KT22K			
	HA-LFS25K1				HG-JR25K1					
MR-J2S-30KA	HA-LFS30K1			MR-J4-DU30KA (Note 20)	HG-JR30K1 (Note 4)		SC-J2SJ4BS09 (Note 18)			
MR-J2S-37KA	HA-LFS37K1			MR-J4-DU37KA (Note 20)	HG-JR37K1					
[Medium/large capacity/low inertia HA-LFS 1500 r/min series, standard/with brake] ((B) represents models with brake)										
MR-J2S-700A	HA-LFS701M(B)	(Note 16)		MR-J4-700A	HG-JR701M(B) (Note 4)	× (Note 3)	SC-J2SJ4KT7K	SC-J2SJ4PW3C1M-■	Existing cable can be used.	• Existing brake cable can be used. • Cooling fan cable (Note 9)
MR-J2S-11KA	HA-LFS11K1M(B)			MR-J4-11KA	HG-JR11K1M(B)		SC-J2SJ4KT15K			
MR-J2S-15KA	HA-LFS15K1M(B)			MR-J4-15KA	HG-JR15K1M(B) (Note 4)					
MR-J2S-22KA	HA-LFS22K1M			MR-J4-22KA	HG-JR22K1M		SC-J2SJ4KT22K	(Note 8)	(Note 17)	• Cooling fan conversion cable SC-J2SJ4FAN1C1M
MR-J2S-30KA	HA-LFS30K1M			MR-J4-DU30KA (Note 20)	HG-JR30K1M		SC-J2SJ4BS09 (Note 18)			
MR-J2S-37KA	HA-LFS37K1M			MR-J4-DU37KA (Note 20)	HG-JR37K1M					
[Medium/large capacity/low inertia HA-LFS 2000 r/min series, standard/with brake] ((B) represents models with brake)										
MR-J2S-500A	HA-LFS502	MR-J4-500A	SC-J2SJ4KT5K	MR-J4-500A	HG-SR502	× (Note 3)	SC-J2SJ4KT5K	SC-HAJ3PW1C1M	SC-HAJ3ENM3C1M	
MR-J2S-700A	HA-LFS702	MR-J4-700A	SC-J2SJ4KT7K	MR-J4-700A	HG-SR702		SC-J2SJ4KT7K	Existing cable can be used.		
MR-J2S-11KA	HA-LFS11K2(B)	MR-J4-11KA	SC-J2SJ4KT15K	MR-J4-11KA	HG-JR11K1M(B) (Note 4)		SC-J2SJ4KT15K	SC-J2SJ4PW3C1M -■	Existing cable can be used.	• Existing brake cable can be used. • Cooling fan cable (Note 9)
MR-J2S-15KA	HA-LFS15K2(B)	MR-J4-15KA (Note 10)	SC-J2SJ4KT15K	MR-J4-11KA (Note 10)	HG-JR11K1M(B)					
MR-J2S-22KA	HA-LFS22K2(B)	MR-J4-22KA (Note 10)	SC-J2SJ4KT22K	MR-J4-15KA (Note 10)	HG-JR15K1M(B)		(Note 11)			
MR-J2S-30KA	HA-LFS30K2	MR-J4-DU30KA (Note 10, 20)	SC-J2SJ4BS09 (Note 18)	MR-J4-22KA (Note 10)	HG-JR22K1M			(Note 8)	(Note 17)	• Cooling fan conversion cable SC-J2SJ4FAN1C1M
MR-J2S-37KA	HA-LFS37K2	MR-J4-DU37KA (Note 10, 20)		MR-J4-DU30KA (Note 10, 20)	HG-JR30K1M		SC-J2SJ4BS09 (Note 18)			

Refer to Appendix page 2-65 for important points to note.

4.2 SSCNET Interface Replacement Combination List (100 V/200 V Class)

(1) Existing HC-KFS motor series (standard/with brake, G1, G2 reducer)

○: Compatible; △: Limited functions or compatible with certain conditions; ×: Incompatible

(1)		(2)		(3)	(4)		(5)		
Existing model (Note 13)		Primary/secondary/simultaneous replacement models (Note 5, 14)			Secondary replacement/simultaneous replacement models				
							Motor side conversion cable model		
Servo amplifier model	Servo motor model	Servo amplifier model (Note 1, 12)	SSSCNET conversion unit model (Note 1)	Renewal kit model	Servo motor model (Note 1)	Compatibility	Power supply conversion cable	Encoder conversion cable	Brake conversion cable
[Small capacity/low inertia HC-KFS series, standard/with brake] ((B) represents models with brake)									
MR-J2S-10B(1)	HC-KFS053(B)	MR-J4-10B(1)-RJ020	MR-J4-T20	SC-J2SBJ4KT02K	HG-KR053(B)	△ (Note 4)	Without brake: SC-J2SJ4PW1C03M-■ With brake: SC-J2SJ4PWBK1C03M-■	SC-HAJ3ENM1C03M-■	Built in to power supply conversion cable.
	HC-KFS13(B)				HG-KR13(B)				
MR-J2S-20B(1)	HC-KFS23(B)	MR-J4-20B(1)-RJ020			HG-KR23(B)				
MR-J2S-40B(1)	HC-KFS43(B)	MR-J4-40B(1)-RJ020		SC-J2SBJ4KT06K	HG-KR43(B)				
MR-J2S-70B	HC-KFS73(B)	MR-J4-70B-RJ020		SC-J2SBJ4KT1K	HG-KR73(B)				
[Small capacity/low inertia HC-KFS series with general reducer (G1)] ((B) represents models with brake)									
MR-J2S-10B(1)	HC-KFS053(B)G1 1/5	MR-J4-10B(1)-RJ020	MR-J4-T20	SC-J2SBJ4KT02K	HG-KR053(B)G1 1/5	△ (Note 4)	Without brake: SC-J2SJ4PW1C03M-■ With brake: SC-J2SJ4PWBK1C03M-■	SC-HAJ3ENM1C03M-■	Built in to power supply conversion cable.
	HC-KFS053(B)G1 1/12				HG-KR053(B)G1 1/12				
	HC-KFS053(B)G1 1/20				HG-KR053(B)G1 1/20				
	HC-KFS13(B)G1 1/5				HG-KR13(B)G1 1/5				
	HC-KFS13(B)G1 1/12				HG-KR13(B)G1 1/12				
	HC-KFS13(B)G1 1/20				HG-KR13(B)G1 1/20				
MR-J2S-20B(1)	HC-KFS23(B)G1 1/5	MR-J4-20B(1)-RJ020			HG-KR23(B)G1 1/5				
	HC-KFS23(B)G1 1/12				HG-KR23(B)G1 1/12 (Note 2)				
	HC-KFS23(B)G1 1/20				HG-KR23(B)G1 1/20 (Note 2)				
MR-J2S-40B(1)	HC-KFS43(B)G1 1/5	MR-J4-40B(1)-RJ020		SC-J2SBJ4KT06K	HG-KR43(B)G1 1/5				
	HC-KFS43(B)G1 1/12				HG-KR43(B)G1 1/12 (Note 2)				
	HC-KFS43(B)G1 1/20				HG-KR43(B)G1 1/20 (Note 2)				
MR-J2S-70B	HC-KFS73(B)G1 1/5	MR-J4-70B-RJ020		SC-J2SBJ4KT1K	HG-KR73(B)G1 1/5				
	HC-KFS73(B)G1 1/12				HG-KR73(B)G1 1/12 (Note 2)				
	HC-KFS73(B)G1 1/20				HG-KR73(B)G1 1/20				
[Small capacity/low inertia HC-KFS series with high-precision reducer (G2)] ((B) represents models with brake)									
MR-J2S-10B(1)	HC-KFS053(B)G2 1/5	MR-J4-10B(1)-RJ020	MR-J4-T20	SC-J2SBJ4KT02K	HG-KR053(B)G7 1/5	× (Note 3) (Note 4)	Without brake: SC-J2SJ4PW1C03M-■ With brake: SC-J2SJ4PWBK1C03M-■	SC-HAJ3ENM1C03M-■	Built in to power supply conversion cable.
	HC-KFS053(B)G2 1/9				HG-KR053(B)G7 1/11				
	HC-KFS053(B)G2 1/20				HG-KR053(B)G7 1/21				
	HC-KFS053(B)G2 1/29				HG-KR053(B)G7 1/33				
	HC-KFS13(B)G2 1/5				HG-KR13(B)G7 1/5				
	HC-KFS13(B)G2 1/9				HG-KR13(B)G7 1/11				
	HC-KFS13(B)G2 1/20				HG-KR13(B)G7 1/21				
	HC-KFS13(B)G2 1/29				HG-KR13(B)G7 1/33				
MR-J2S-20B(1)	HC-KFS23(B)G2 1/5	MR-J4-20B(1)-RJ020			HG-KR23(B)G7 1/5				
	HC-KFS23(B)G2 1/9				HG-KR23(B)G7 1/11				
	HC-KFS23(B)G2 1/20				HG-KR23(B)G7 1/21				
	HC-KFS23(B)G2 1/29				HG-KR23(B)G7 1/33				
MR-J2S-40B(1)	HC-KFS43(B)G2 1/5	MR-J4-40B(1)-RJ020		SC-J2SBJ4KT06K	HG-KR43(B)G7 1/5				
	HC-KFS43(B)G2 1/9				HG-KR43(B)G7 1/11				
	HC-KFS43(B)G2 1/20				HG-KR43(B)G7 1/21				
	HC-KFS43(B)G2 1/29				HG-KR43(B)G7 1/33				
MR-J2S-70B	HC-KFS73(B)G2 1/5	MR-J4-70B-RJ020		SC-J2SBJ4KT1K	HG-KR73(B)G7 1/5				
	HC-KFS73(B)G2 1/9				HG-KR73(B)G7 1/11				
	HC-KFS73(B)G2 1/20				HG-KR73(B)G7 1/21				
	HC-KFS73(B)G2 1/29				HG-KR73(B)G7 1/33				

Refer to Appendix page 2-65 for important points to note.

(2) Existing HC-KFS motor series (G5, G7 reducer)

○: Compatible; △: Limited functions or compatible with certain conditions; ×: Incompatible

(1)		(2)		(3)	(4)		(5)		
Existing model (Note 13)		Primary/secondary/simultaneous replacement models (Note 5, 14)			Secondary replacement/simultaneous replacement models				
Servo amplifier model	Servo motor model	Servo amplifier model (Note 1, 12)	SSSCNET conversion unit model (Note 1)	Renewal kit model	Servo motor model (Note 1)	Compatibility	Motor side conversion cable model: Power supply conversion cable	Motor side conversion cable model: Encoder conversion cable	Motor side conversion cable model: Brake conversion cable
[Small capacity/low inertia HC-KFS series with high-precision reducer, flange output type (G5)] ((B) represents models with brake)									
MR-J2S-10B(1)	HC-KFS053(B)G5 1/5	MR-J4-10B(1)-RJ020	MR-J4-T20	SC-J2SBJ4KT02K	HG-KR053(B)G5 1/5	△ (Note 4)	Without brake: SC-J2SJ4PW1C03M-■ With brake: SC-J2SJ4PWBK1C03M-■	SC-HAJ3ENM1C03M-■	Built in to power supply conversion cable.
	HC-KFS053(B)G5 1/11				HG-KR053(B)G5 1/11				
	HC-KFS053(B)G5 1/21				HG-KR053(B)G5 1/21				
	HC-KFS053(B)G5 1/33				HG-KR053(B)G5 1/33				
	HC-KFS053(B)G5 1/45				HG-KR053(B)G5 1/45				
	HC-KFS13(B)G5 1/5				HG-KR13(B)G5 1/5				
	HC-KFS13(B)G5 1/11				HG-KR13(B)G5 1/11				
	HC-KFS13(B)G5 1/21				HG-KR13(B)G5 1/21				
	HC-KFS13(B)G5 1/33				HG-KR13(B)G5 1/33				
	HC-KFS13(B)G5 1/45				HG-KR13(B)G5 1/45				
MR-J2S-20B(1)	HC-KFS23(B)G5 1/5	MR-J4-20B(1)-RJ020			HG-KR23(B)G5 1/5				
	HC-KFS23(B)G5 1/11				HG-KR23(B)G5 1/11				
	HC-KFS23(B)G5 1/21				HG-KR23(B)G5 1/21				
	HC-KFS23(B)G5 1/33				HG-KR23(B)G5 1/33				
	HC-KFS23(B)G5 1/45				HG-KR23(B)G5 1/45				
MR-J2S-40B(1)	HC-KFS43(B)G5 1/5	MR-J4-40B(1)-RJ020		SC-J2SBJ4KT06K	HG-KR43(B)G5 1/5				
	HC-KFS43(B)G5 1/11				HG-KR43(B)G5 1/11				
	HC-KFS43(B)G5 1/21				HG-KR43(B)G5 1/21				
	HC-KFS43(B)G5 1/33				HG-KR43(B)G5 1/33				
	HC-KFS43(B)G5 1/45				HG-KR43(B)G5 1/45				
MR-J2S-70B	HC-KFS73(B)G5 1/5	MR-J4-70B-RJ020		SC-J2SBJ4KT1K	HG-KR73(B)G5 1/5				
	HC-KFS73(B)G5 1/11				HG-KR73(B)G5 1/11				
	HC-KFS73(B)G5 1/21				HG-KR73(B)G5 1/21				
	HC-KFS73(B)G5 1/33				HG-KR73(B)G5 1/33				
	HC-KFS73(B)G5 1/45				HG-KR73(B)G5 1/45				
[Small capacity/low inertia HC-KFS series with high-precision reducer, shaft output type (G7)] ((B) represents models with brake)									
MR-J2S-10B(1)	HC-KFS053(B)G7 1/5	MR-J4-10B(1)-RJ020	MR-J4-T20	SC-J2SBJ4KT02K	HG-KR053(B)G7 1/5	△ (Note 4)	Without brake: SC-J2SJ4PW1C03M-■ With brake: SC-J2SJ4PWBK1C03M-■	SC-HAJ3ENM1C03M-■	Built in to power supply conversion cable.
	HC-KFS053(B)G7 1/11				HG-KR053(B)G7 1/11				
	HC-KFS053(B)G7 1/21				HG-KR053(B)G7 1/21				
	HC-KFS053(B)G7 1/33				HG-KR053(B)G7 1/33				
	HC-KFS053(B)G7 1/45				HG-KR053(B)G7 1/45				
	HC-KFS13(B)G7 1/5				HG-KR13(B)G7 1/5				
	HC-KFS13(B)G7 1/11				HG-KR13(B)G7 1/11				
	HC-KFS13(B)G7 1/21				HG-KR13(B)G7 1/21				
	HC-KFS13(B)G7 1/33				HG-KR13(B)G7 1/33				
	HC-KFS13(B)G7 1/45				HG-KR13(B)G7 1/45				
MR-J2S-20B(1)	HC-KFS23(B)G7 1/5	MR-J4-20B(1)-RJ020			HG-KR23(B)G7 1/5				
	HC-KFS23(B)G7 1/11				HG-KR23(B)G7 1/11				
	HC-KFS23(B)G7 1/21				HG-KR23(B)G7 1/21				
	HC-KFS23(B)G7 1/33				HG-KR23(B)G7 1/33				
	HC-KFS23(B)G7 1/45				HG-KR23(B)G7 1/45				
MR-J2S-40B(1)	HC-KFS43(B)G7 1/5	MR-J4-40B(1)-RJ020		SC-J2SBJ4KT06K	HG-KR43(B)G7 1/5				
	HC-KFS43(B)G7 1/11				HG-KR43(B)G7 1/11				
	HC-KFS43(B)G7 1/21				HG-KR43(B)G7 1/21				
	HC-KFS43(B)G7 1/33				HG-KR43(B)G7 1/33				
	HC-KFS43(B)G7 1/45				HG-KR43(B)G7 1/45				
MR-J2S-70B	HC-KFS73(B)G7 1/5	MR-J4-70B-RJ020		SC-J2SBJ4KT1K	HG-KR73(B)G7 1/5				
	HC-KFS73(B)G7 1/11				HG-KR73(B)G7 1/11				
	HC-KFS73(B)G7 1/21				HG-KR73(B)G7 1/21				
	HC-KFS73(B)G7 1/33				HG-KR73(B)G7 1/33				
	HC-KFS73(B)G7 1/45				HG-KR73(B)G7 1/45				

Refer to Appendix page 2-65 for important points to note.

(3) Existing HC-KFS46, KFS410 motor

○: Compatible; △: Limited functions or compatible with certain conditions; ×: Incompatible

(1)		(2)		(3)	(4)		(5)		(6)	(7)		
Existing model (Note 13)		Primary replacement model (Note 5)			Secondary replacement/simultaneous replacement models							
Servo amplifier model	Servo motor model	Servo amplifier model (Note 1, 12)	SSCNET conversion unit model (Note 1)	Renewal kit model	Servo amplifier model (Note 1)	SSCNET conversion unit model (Note 1)	Servo motor model (Note 1)	Compatibility	Renewal kit model	Motor side conversion cable model		
										Power supply conversion cable	Encoder conversion cable	Brake conversion cable
[Small capacity/low inertia HC-KFS series, standard/with brake] ((B) represents models with brake)												
MR-J2S-70B	HC-KFS46 HC-KFS410	MR-J4-70B-RJ020 (Note 10)	MR-J4-T20	SC-J2SBJ4KT1K	MR-J4-40B-RJ020 (Note 10)	MR-J4-T20	HG-KR43	△ (Note 4) (Note 15)	(Note 11)	Without brake: SC-J2SJ4PW1C03M-■ With brake: SC-J2SJ4PWBK1C03M-■	SC-HAJ3ENM1C03M-■	Built in to power supply conversion cable.

Refer to Appendix page 2-65 for important points to note.

(4) Existing HC-MFS motor series (standard/with brake, G1, G2 reducer)

○: Compatible; △: Limited functions or compatible with certain conditions; ×: Incompatible

(1)		(2)		(3)	(4)		(5)		
Existing model (Note 13)		Primary/secondary/simultaneous replacement models (Note 5, 14)			Secondary replacement/simultaneous replacement models				
Servo amplifier model	Servo motor model	Servo amplifier model (Note 1, 12)	SSCNET conversion unit model (Note 1)	Renewal kit model	Servo motor model (Note 1)	Compatibility	Motor side conversion cable model: Power supply conversion cable	Motor side conversion cable model: Encoder conversion cable	Motor side conversion cable model: Brake conversion cable
[Small capacity/ultra-low inertia HC-MFS series, standard/with brake] ((B) represents models with brake)									
MR-J2S-10B(1)	HC-MFS053(B)	MR-J4-10B(1)-RJ020	MR-J4-T20	SC-J2SBJ4KT02K	HG-MR053(B)	○	Without brake: SC-J2SJ4PW1C03M-■ With brake: SC-J2SJ4PWBK1C03M-■	SC-HAJ3ENM1C03M-■	Built in to power supply conversion cable.
	HC-MFS13(B)				HG-MR13(B)				
MR-J2S-20B(1)	HC-MFS23(B)	MR-J4-20B(1)-RJ020			HG-MR23(B)				
MR-J2S-40B(1)	HC-MFS43(B)	MR-J4-40B(1)-RJ020		SC-J2SBJ4KT06K	HG-MR43(B)				
MR-J2S-70B	HC-MFS73(B)	MR-J4-70B-RJ020		SC-J2SBJ4KT1K	HG-MR73(B)				
[Small capacity/ultra-low inertia HC-MFS series with general reducer (G1)] ((B) represents models with brake)									
MR-J2S-10B(1)	HC-MFS053(B)G1 1/5	MR-J4-10B(1)-RJ020	MR-J4-T20	SC-J2SBJ4KT02K	HG-KR053(B)G1 1/5	△ (Note 4)	Without brake: SC-J2SJ4PW1C03M-■ With brake: SC-J2SJ4PWBK1C03M-■	SC-HAJ3ENM1C03M-■	Built in to power supply conversion cable.
	HC-MFS053(B)G1 1/12				HG-KR053(B)G1 1/12				
	HC-MFS053(B)G1 1/20				HG-KR053(B)G1 1/20				
	HC-MFS13(B)G1 1/5				HG-KR13(B)G1 1/5				
	HC-MFS13(B)G1 1/12				HG-KR13(B)G1 1/12				
	HC-MFS13(B)G1 1/20				HG-KR13(B)G1 1/20				
MR-J2S-20B(1)	HC-MFS23(B)G1 1/5	MR-J4-20B(1)-RJ020			HG-KR23(B)G1 1/5				
	HC-MFS23(B)G1 1/12				HG-KR23(B)G1 1/12 (Note 2)				
	HC-MFS23(B)G1 1/20				HG-KR23(B)G1 1/20 (Note 2)				
MR-J2S-40B(1)	HC-MFS43(B)G1 1/5	MR-J4-40B(1)-RJ020		SC-J2SBJ4KT06K	HG-KR43(B)G1 1/5				
	HC-MFS43(B)G1 1/12				HG-KR43(B)G1 1/12 (Note 2)				
	HC-MFS43(B)G1 1/20				HG-KR43(B)G1 1/20 (Note 2)				
MR-J2S-70B	HC-MFS73(B)G1 1/5	MR-J4-70B-RJ020		SC-J2SBJ4KT1K	HG-KR73(B)G1 1/5				
	HC-MFS73(B)G1 1/12				HG-KR73(B)G1 1/12 (Note 2)				
	HC-MFS73(B)G1 1/20				HG-KR73(B)G1 1/20				
[Small capacity/ultra-low inertia HC-MFS series with high-precision reducer (G2)] ((B) represents models with brake)									
MR-J2S-10B(1)	HC-MFS053(B)G2 1/5	MR-J4-10B(1)-RJ020	MR-J4-T20	SC-J2SBJ4KT02K	HG-KR053(B)G7 1/5	× (Note 3) (Note 4)	Without brake: SC-J2SJ4PW1C03M-■ With brake: SC-J2SJ4PWBK1C03M-■	SC-HAJ3ENM1C03M-■	Built in to power supply conversion cable.
	HC-MFS053(B)G2 1/9				HG-KR053(B)G7 1/11				
	HC-MFS053(B)G2 1/20				HG-KR053(B)G7 1/21				
	HC-MFS053(B)G2 1/29				HG-KR053(B)G7 1/33				
	HC-MFS13(B)G2 1/5				HG-KR13(B)G7 1/5				
	HC-MFS13(B)G2 1/9				HG-KR13(B)G7 1/11				
	HC-MFS13(B)G2 1/20				HG-KR13(B)G7 1/21				
	HC-MFS13(B)G2 1/29				HG-KR13(B)G7 1/33				
MR-J2S-20B(1)	HC-MFS23(B)G2 1/5	MR-J4-20B(1)-RJ020			HG-KR23(B)G7 1/5				
	HC-MFS23(B)G2 1/9				HG-KR23(B)G7 1/11				
	HC-MFS23(B)G2 1/20				HG-KR23(B)G7 1/21				
	HC-MFS23(B)G2 1/29				HG-KR23(B)G7 1/33				
MR-J2S-40B(1)	HC-MFS43(B)G2 1/5	MR-J4-40B(1)-RJ020		SC-J2SBJ4KT06K	HG-KR43(B)G7 1/5				
	HC-MFS43(B)G2 1/9				HG-KR43(B)G7 1/11				
	HC-MFS43(B)G2 1/20				HG-KR43(B)G7 1/21				
	HC-MFS43(B)G2 1/29				HG-KR43(B)G7 1/33				
MR-J2S-70B	HC-MFS73(B)G2 1/5	MR-J4-70B-RJ020		SC-J2SBJ4KT1K	HG-KR73(B)G7 1/5				
	HC-MFS73(B)G2 1/9				HG-KR73(B)G7 1/11				
	HC-MFS73(B)G2 1/20				HG-KR73(B)G7 1/21				
	HC-MFS73(B)G2 1/29				HG-KR73(B)G7 1/33				

Refer to Appendix page 2-65 for important points to note.

(5) Existing HC-MFS motor series (G5, G7 reducer)

○: Compatible; △: Limited functions or compatible with certain conditions; ×: Incompatible

(1)		(2)		(3)	(4)		(5)		
Existing model (Note 13)		Primary/secondary/simultaneous replacement models (Note 5, 14)			Secondary replacement/simultaneous replacement models				
Servo amplifier model	Servo motor model	Servo amplifier model (Note 1, 12)	SSCNET conversion unit model (Note 1)	Renewal kit model	Servo motor model (Note 1)	Compatibility	Motor side conversion cable model: Power supply conversion cable	Motor side conversion cable model: Encoder conversion cable	Motor side conversion cable model: Brake conversion cable
[Small capacity/ultra-low inertia HC-MFS series with high-precision reducer, flange output type (G5)] ((B) represents models with brake)									
MR-J2S-10B(1)	HC-MFS053(B)G5 1/5	MR-J4-10B(1)-RJ020	MR-J4-T20	SC-J2SBJ4KT02K	HG-KR053(B)G5 1/5	△ (Note 4)	Without brake: SC-J2SJ4PW1C03M-■ With brake: SC-J2SJ4PWBK1C03M-■	SC-HAJ3ENM1C03M-■	Built in to power supply conversion cable.
	HC-MFS053(B)G5 1/11				HG-KR053(B)G5 1/11				
	HC-MFS053(B)G5 1/21				HG-KR053(B)G5 1/21				
	HC-MFS053(B)G5 1/33				HG-KR053(B)G5 1/33				
	HC-MFS053(B)G5 1/45				HG-KR053(B)G5 1/45				
	HC-MFS13(B)G5 1/5				HG-KR13(B)G5 1/5				
	HC-MFS13(B)G5 1/11				HG-KR13(B)G5 1/11				
	HC-MFS13(B)G5 1/21				HG-KR13(B)G5 1/21				
	HC-MFS13(B)G5 1/33				HG-KR13(B)G5 1/33				
	HC-MFS13(B)G5 1/45				HG-KR13(B)G5 1/45				
MR-J2S-20B(1)	HC-MFS23(B)G5 1/5	MR-J4-20B(1)-RJ020			HG-KR23(B)G5 1/5				
	HC-MFS23(B)G5 1/11				HG-KR23(B)G5 1/11				
	HC-MFS23(B)G5 1/21				HG-KR23(B)G5 1/21				
	HC-MFS23(B)G5 1/33				HG-KR23(B)G5 1/33				
	HC-MFS23(B)G5 1/45				HG-KR23(B)G5 1/45				
MR-J2S-40B(1)	HC-MFS43(B)G5 1/5	MR-J4-40B(1)-RJ020		SC-J2SBJ4KT06K	HG-KR43(B)G5 1/5				
	HC-MFS43(B)G5 1/11				HG-KR43(B)G5 1/11				
	HC-MFS43(B)G5 1/21				HG-KR43(B)G5 1/21				
	HC-MFS43(B)G5 1/33				HG-KR43(B)G5 1/33				
	HC-MFS43(B)G5 1/45				HG-KR43(B)G5 1/45				
MR-J2S-70B	HC-MFS73(B)G5 1/5	MR-J4-70B-RJ020		SC-J2SBJ4KT1K	HG-KR73(B)G5 1/5				
	HC-MFS73(B)G5 1/11				HG-KR73(B)G5 1/11				
	HC-MFS73(B)G5 1/21				HG-KR73(B)G5 1/21				
	HC-MFS73(B)G5 1/33				HG-KR73(B)G5 1/33				
	HC-MFS73(B)G5 1/45				HG-KR73(B)G5 1/45				
[Small capacity/ultra-low inertia HC-MFS series with high-precision reducer, shaft output type (G7)] ((B) represents models with brake)									
MR-J2S-10B(1)	HC-MFS053(B)G7 1/5	MR-J4-10B(1)-RJ020	MR-J4-T20	SC-J2SBJ4KT02K	HG-KR053(B)G7 1/5	△ (Note 4)	Without brake: SC-J2SJ4PW1C03M-■ With brake: SC-J2SJ4PWBK1C03M-■	SC-HAJ3ENM1C03M-■	Built in to power supply conversion cable.
	HC-MFS053(B)G7 1/11				HG-KR053(B)G7 1/11				
	HC-MFS053(B)G7 1/21				HG-KR053(B)G7 1/21				
	HC-MFS053(B)G7 1/33				HG-KR053(B)G7 1/33				
	HC-MFS053(B)G7 1/45				HG-KR053(B)G7 1/45				
	HC-MFS13(B)G7 1/5				HG-KR13(B)G7 1/5				
	HC-MFS13(B)G7 1/11				HG-KR13(B)G7 1/11				
	HC-MFS13(B)G7 1/21				HG-KR13(B)G7 1/21				
	HC-MFS13(B)G7 1/33				HG-KR13(B)G7 1/33				
	HC-MFS13(B)G7 1/45				HG-KR13(B)G7 1/45				
MR-J2S-20B(1)	HC-MFS23(B)G7 1/5	MR-J4-20B(1)-RJ020			HG-KR23(B)G7 1/5				
	HC-MFS23(B)G7 1/11				HG-KR23(B)G7 1/11				
	HC-MFS23(B)G7 1/21				HG-KR23(B)G7 1/21				
	HC-MFS23(B)G7 1/33				HG-KR23(B)G7 1/33				
	HC-MFS23(B)G7 1/45				HG-KR23(B)G7 1/45				
MR-J2S-40B(1)	HC-MFS43(B)G7 1/5	MR-J4-40B(1)-RJ020		SC-J2SBJ4KT06K	HG-KR43(B)G7 1/5				
	HC-MFS43(B)G7 1/11				HG-KR43(B)G7 1/11				
	HC-MFS43(B)G7 1/21				HG-KR43(B)G7 1/21				
	HC-MFS43(B)G7 1/33				HG-KR43(B)G7 1/33				
	HC-MFS43(B)G7 1/45				HG-KR43(B)G7 1/45				
MR-J2S-70B	HC-MFS73(B)G7 1/5	MR-J4-70B-RJ020		SC-J2SBJ4KT1K	HG-KR73(B)G7 1/5				
	HC-MFS73(B)G7 1/11				HG-KR73(B)G7 1/11				
	HC-MFS73(B)G7 1/21				HG-KR73(B)G7 1/21				
	HC-MFS73(B)G7 1/33				HG-KR73(B)G7 1/33				
	HC-MFS73(B)G7 1/45				HG-KR73(B)G7 1/45				

Refer to Appendix page 2-65 for important points to note.

(6) Existing HC-SFS motor series (standard/with brake, G2 reducer)

○: Compatible; △: Limited functions or compatible with certain conditions; ×: Incompatible

(1)		(2)		(3)	(4)		(5)		
Existing model (Note 13)		Primary/secondary/simultaneous replacement models (Note 5, 14)			Secondary replacement/simultaneous replacement models				
Servo amplifier model	Servo motor model	Servo amplifier model (Note 1, 12)	SSCNET conversion unit model (Note 1)	Renewal kit model	Servo motor model (Note 1)	Compatibility	Motor side conversion cable model: Power supply conversion cable	Motor side conversion cable model: Encoder conversion cable	Motor side conversion cable model: Brake conversion cable
[Medium capacity/medium inertia HC-SFS series, standard/with brake] ((B) represents models with brake)									
MR-J2S-60B	HC-SFS52(B)	MR-J4-60B-RJ020	MR-J4-T20	SC-J2SBJ4KT06K	HG-SR52(B)	△ (Note 6)	SC-SAJ3PW2KC1M-S2	SC-HAJ3ENM3C1M	(Note 7)
	HC-SFS53(B)								
MR-J2S-100B	HC-SFS81(B)	MR-J4-100B-RJ020		SC-J2SBJ4KT1K	HG-SR81(B)				
	HC-SFS102(B)				HG-SR102(B)				
	HC-SFS103(B)								
MR-J2S-200B	HC-SFS121(B)	MR-J4-200B-RJ020		SC-J2SBJ4KT3K	HG-SR121(B)		SC-HAJ3PW1C1M		
	HC-SFS152(B)				HG-SR152(B)		SC-SAJ3PW2KC1M-S2		
	HC-SFS153(B)								
	HC-SFS201(B)				HG-SR201(B)		SC-HAJ3PW1C1M		
	HC-SFS202(B)				HG-SR202(B)				
	HC-SFS203(B)								
MR-J2S-350B	HC-SFS301(B)	MR-J4-350B-RJ020			HG-SR301(B)				
	HC-SFS352(B)				HG-SR352(B)				
	HC-SFS353(B)								
MR-J2S-500B	HC-SFS502(B)	MR-J4-500B-RJ020		SC-J2SBJ4KT5K	HG-SR502(B)				
MR-J2S-700B	HC-SFS702(B)	MR-J4-700B-RJ020		SC-J2SBJ4KT7K	HG-SR702(B)		Existing cable can be used.		
[Medium capacity/medium inertia HC-SFS series with high-precision reducer (G2)] ((B) represents models with brake)									
MR-J2S-60B	HC-SFS52(B)G2 1/5	MR-J4-60B-RJ020	MR-J4-T20	SC-J2SBJ4KT06K	HG-SR52(B)G7 1/5	× (Note 3) (Note 6)	SC-SAJ3PW2KC1M-S2	SC-HAJ3ENM3C1M	(Note 7)
	HC-SFS52(B)G2 1/9				HG-SR52(B)G7 1/11				
	HC-SFS52(B)G2 1/20				HG-SR52(B)G7 1/21				
	HC-SFS52(B)G2 1/29				HG-SR52(B)G7 1/33				
	HC-SFS52(B)G2 1/45				HG-SR52(B)G7 1/45				
MR-J2S-100B	HC-SFS102(B)G2 1/5	MR-J4-100B-RJ020		SC-J2SBJ4KT1K	HG-SR102(B)G7 1/5				
	HC-SFS102(B)G2 1/9				HG-SR102(B)G7 1/11				
	HC-SFS102(B)G2 1/20				HG-SR102(B)G7 1/21				
	HC-SFS102(B)G2 1/29				HG-SR102(B)G7 1/33				
	HC-SFS102(B)G2 1/45				HG-SR102(B)G7 1/45				
MR-J2S-200B	HC-SFS152(B)G2 1/5	MR-J4-200B-RJ020		SC-J2SBJ4KT3K	HG-SR152(B)G7 1/5				
	HC-SFS152(B)G2 1/9				HG-SR152(B)G7 1/11				
	HC-SFS152(B)G2 1/20				HG-SR152(B)G7 1/21				
	HC-SFS152(B)G2 1/29				HG-SR152(B)G7 1/33				
	HC-SFS152(B)G2 1/45				HG-SR152(B)G7 1/45				
	HC-SFS202(B)G2 1/5				HG-SR202(B)G7 1/5		SC-HAJ3PW1C1M		
	HC-SFS202(B)G2 1/9				HG-SR202(B)G7 1/11				
	HC-SFS202(B)G2 1/20				HG-SR202(B)G7 1/21				
	HC-SFS202(B)G2 1/29				HG-SR202(B)G7 1/33				
	HC-SFS202(B)G2 1/45				HG-SR202(B)G7 1/45				
MR-J2S-350B	HC-SFS352(B)G2 1/5	MR-J4-350B-RJ020			HG-SR352(B)G7 1/5				
	HC-SFS352(B)G2 1/9				HG-SR352(B)G7 1/11				
	HC-SFS352(B)G2 1/20				HG-SR352(B)G7 1/21				
MR-J2S-500B	HC-SFS502(B)G2 1/5	MR-J4-500B-RJ020		SC-J2SBJ4KT5K	HG-SR502(B)G7 1/5				
	HC-SFS502(B)G2 1/9				HG-SR502(B)G7 1/11				
MR-J2S-700B	HC-SFS702(B)G2 1/5	MR-J4-700B-RJ020		SC-J2SBJ4KT7K	HG-SR702(B)G7 1/5		Existing cable can be used.		

Refer to Appendix page 2-65 for important points to note.

(7) Existing HC-SFS motor series (G1 reducer)

○: Compatible; △: Limited functions or compatible with certain conditions; ×: Incompatible

(1)		(2)		(3)	(4)		(5)		
Existing model (Note 13)		Primary/secondary/simultaneous replacement models (Note 5, 14)			Secondary replacement/simultaneous replacement models				
							Motor side conversion cable model		
Servo amplifier model	Servo motor model	Servo amplifier model (Note 1, 12)	SSCNET conversion unit model (Note 1)	Renewal kit model	Servo motor model (Note 1)	Compatibility	Power supply conversion cable	Encoder conversion cable	Brake conversion cable
[Medium capacity/medium inertia HC-SFS series with general reducer (G1)] ((B) represents models with brake, (H) represents foot-mounting)									
MR-J2S-60B	HC-SFS52(B)G1(H) 1/6	MR-J4-60B-RJ020	MR-J4-T20	SC-J2SBJ4KT06K	HG-SR52(B)G1(H) 1/6	△ (Note 6)	SC-SAJ3PW2KC1M-S2	SC-HAJ3ENM3C1M	(Note 7)
	HC-SFS52(B)G1(H) 1/11				HG-SR52(B)G1(H) 1/11				
	HC-SFS52(B)G1(H) 1/17				HG-SR52(B)G1(H) 1/17				
	HC-SFS52(B)G1(H) 1/29				HG-SR52(B)G1(H) 1/29				
	HC-SFS52(B)G1(H) 1/35				HG-SR52(B)G1(H) 1/35				
	HC-SFS52(B)G1(H) 1/43				HG-SR52(B)G1(H) 1/43				
	HC-SFS52(B)G1(H) 1/59				HG-SR52(B)G1(H) 1/59				
MR-J2S-100B	HC-SFS102(B)G1(H) 1/6	MR-J4-100B-RJ020		SC-J2SBJ4KT1K	HG-SR102(B)G1(H) 1/6				
	HC-SFS102(B)G1(H) 1/11				HG-SR102(B)G1(H) 1/11				
	HC-SFS102(B)G1(H) 1/17				HG-SR102(B)G1(H) 1/17				
	HC-SFS102(B)G1(H) 1/29				HG-SR102(B)G1(H) 1/29				
	HC-SFS102(B)G1(H) 1/35				HG-SR102(B)G1(H) 1/35				
	HC-SFS102(B)G1(H) 1/43				HG-SR102(B)G1(H) 1/43				
	HC-SFS102(B)G1(H) 1/59				HG-SR102(B)G1(H) 1/59				
MR-J2S-200B	HC-SFS152(B)G1(H) 1/6	MR-J4-200B-RJ020		SC-J2SBJ4KT3K	HG-SR152(B)G1(H) 1/6				
	HC-SFS152(B)G1(H) 1/11				HG-SR152(B)G1(H) 1/11				
	HC-SFS152(B)G1(H) 1/17				HG-SR152(B)G1(H) 1/17				
	HC-SFS152(B)G1(H) 1/29				HG-SR152(B)G1(H) 1/29				
	HC-SFS152(B)G1(H) 1/35				HG-SR152(B)G1(H) 1/35				
	HC-SFS152(B)G1(H) 1/43				HG-SR152(B)G1(H) 1/43				
	HC-SFS152(B)G1(H) 1/59				HG-SR152(B)G1(H) 1/59				
	HC-SFS202(B)G1(H) 1/6				HG-SR202(B)G1(H) 1/6		SC-HAJ3PW1C1M		
	HC-SFS202(B)G1(H) 1/11				HG-SR202(B)G1(H) 1/11				
	HC-SFS202(B)G1(H) 1/17				HG-SR202(B)G1(H) 1/17				
	HC-SFS202(B)G1(H) 1/29				HG-SR202(B)G1(H) 1/29				
	HC-SFS202(B)G1(H) 1/35				HG-SR202(B)G1(H) 1/35				
	HC-SFS202(B)G1(H) 1/43				HG-SR202(B)G1(H) 1/43				
	HC-SFS202(B)G1(H) 1/59				HG-SR202(B)G1(H) 1/59				
MR-J2S-350B	HC-SFS352(B)G1(H) 1/6	MR-J4-350B-RJ020			HG-SR352(B)G1(H) 1/6				
	HC-SFS352(B)G1(H) 1/11				HG-SR352(B)G1(H) 1/11				
	HC-SFS352(B)G1(H) 1/17				HG-SR352(B)G1(H) 1/17				
	HC-SFS352(B)G1(H) 1/29				HG-SR352(B)G1(H) 1/29				
	HC-SFS352(B)G1(H) 1/35				HG-SR352(B)G1(H) 1/35				
	HC-SFS352(B)G1(H) 1/43				HG-SR352(B)G1(H) 1/43				
	HC-SFS352(B)G1(H) 1/59				HG-SR352(B)G1(H) 1/59				
MR-J2S-500B	HC-SFS502(B)G1(H) 1/11	MR-J4-500B-RJ020		SC-J2SBJ4KT5K	HG-SR502(B)G1(H) 1/11				
	HC-SFS502(B)G1(H) 1/17				HG-SR502(B)G1(H) 1/17				
	HC-SFS502(B)G1(H) 1/29				HG-SR502(B)G1(H) 1/29				
	HC-SFS502(B)G1(H) 1/35				HG-SR502(B)G1(H) 1/35				
	HC-SFS502(B)G1(H) 1/43				HG-SR502(B)G1(H) 1/43				
MR-J2S-700B	HC-SFS702(B)G1(H) 1/11	MR-J4-700B-RJ020		SC-J2SBJ4KT7K	HG-SR702(B)G1(H) 1/11		Existing cable can be used.		
	HC-SFS702(B)G1(H) 1/17				HG-SR702(B)G1(H) 1/17				
	HC-SFS702(B)G1(H) 1/29				HG-SR702(B)G1(H) 1/29				
	HC-SFS702(B)G1(H) 1/35				HG-SR702(B)G1(H) 1/35				
	HC-SFS702(B)G1(H) 1/43				HG-SR702(B)G1(H) 1/43				

Refer to Appendix page 2-65 for important points to note.

(8) Existing HC-SFS motor series (G5, G7 reducer)

○: Compatible; △: Limited functions or compatible with certain conditions; ×: Incompatible

(1)		(2)		(3)	(4)		(5)		
Existing model (Note 13)		Primary/secondary/simultaneous replacement models (Note 5, 14)			Secondary replacement/simultaneous replacement models				
Servo amplifier model	Servo motor model	Servo amplifier model (Note 1, 12)	SSCNET conversion unit model (Note 1)	Renewal kit model	Servo motor model (Note 1)	Compatibility	Motor side conversion cable model: Power supply conversion cable	Motor side conversion cable model: Encoder conversion cable	Motor side conversion cable model: Brake conversion cable
[Medium capacity/medium inertia HC-SFS series with high-precision reducer, flange output type (G5)] ((B) represents models with brake)									
MR-J2S-60B	HC-SFS52(B)G5 1/5	MR-J4-60B-RJ020	MR-J4-T20	SC-J2SBJ4KT06K	HG-SR52(B)G5 1/5	△ (Note 6)	SC-SAJ3PW2KC1M-S2	SC-HAJ3ENM3C1M	(Note 7)
	HC-SFS52(B)G5 1/11				HG-SR52(B)G5 1/11				
	HC-SFS52(B)G5 1/21				HG-SR52(B)G5 1/21				
	HC-SFS52(B)G5 1/33				HG-SR52(B)G5 1/33				
	HC-SFS52(B)G5 1/45				HG-SR52(B)G5 1/45				
MR-J2S-100B	HC-SFS102(B)G5 1/5	MR-J4-100B-RJ020		SC-J2SBJ4KT1K	HG-SR102(B)G5 1/5				
	HC-SFS102(B)G5 1/11				HG-SR102(B)G5 1/11				
	HC-SFS102(B)G5 1/21				HG-SR102(B)G5 1/21				
	HC-SFS102(B)G5 1/33				HG-SR102(B)G5 1/33				
	HC-SFS102(B)G5 1/45				HG-SR102(B)G5 1/45				
MR-J2S-200B	HC-SFS152(B)G5 1/5	MR-J4-200B-RJ020		SC-J2SBJ4KT3K	HG-SR152(B)G5 1/5				
	HC-SFS152(B)G5 1/11				HG-SR152(B)G5 1/11				
	HC-SFS152(B)G5 1/21				HG-SR152(B)G5 1/21				
	HC-SFS152(B)G5 1/33				HG-SR152(B)G5 1/33				
	HC-SFS152(B)G5 1/45				HG-SR152(B)G5 1/45				
	HC-SFS202(B)G5 1/5				HG-SR202(B)G5 1/5		SC-HAJ3PW1C1M		
	HC-SFS202(B)G5 1/11				HG-SR202(B)G5 1/11				
	HC-SFS202(B)G5 1/21				HG-SR202(B)G5 1/21				
	HC-SFS202(B)G5 1/33				HG-SR202(B)G5 1/33				
	HC-SFS202(B)G5 1/45				HG-SR202(B)G5 1/45				
MR-J2S-350B	HC-SFS352(B)G5 1/5	MR-J4-350B-RJ020			HG-SR352(B)G5 1/5				
	HC-SFS352(B)G5 1/11				HG-SR352(B)G5 1/11				
	HC-SFS352(B)G5 1/21				HG-SR352(B)G5 1/21				
MR-J2S-500B	HC-SFS502(B)G5 1/5	MR-J4-500B-RJ020		SC-J2SBJ4KT5K	HG-SR502(B)G5 1/5				
	HC-SFS502(B)G5 1/11				HG-SR502(B)G5 1/11				
MR-J2S-700B	HC-SFS702(B)G5 1/5	MR-J4-700B-RJ020		SC-J2SBJ4KT7K	HG-SR702(B)G5 1/5		Existing cable can be used.		
[Medium capacity/medium inertia HC-SFS series with high-precision reducer, shaft output type (G7)] ((B) represents models with brake)									
MR-J2S-60B	HC-SFS52(B)G7 1/5	MR-J4-60B-RJ020	MR-J4-T20	SC-J2SBJ4KT06K	HG-SR52(B)G7 1/5	△ (Note 6)	SC-SAJ3PW2KC1M-S2	SC-HAJ3ENM3C1M	(Note 7)
	HC-SFS52(B)G7 1/11				HG-SR52(B)G7 1/11				
	HC-SFS52(B)G7 1/21				HG-SR52(B)G7 1/21				
	HC-SFS52(B)G7 1/33				HG-SR52(B)G7 1/33				
	HC-SFS52(B)G7 1/45				HG-SR52(B)G7 1/45				
MR-J2S-100B	HC-SFS102(B)G7 1/5	MR-J4-100B-RJ020		SC-J2SBJ4KT1K	HG-SR102(B)G7 1/5				
	HC-SFS102(B)G7 1/11				HG-SR102(B)G7 1/11				
	HC-SFS102(B)G7 1/21				HG-SR102(B)G7 1/21				
	HC-SFS102(B)G7 1/33				HG-SR102(B)G7 1/33				
	HC-SFS102(B)G7 1/45				HG-SR102(B)G7 1/45				
MR-J2S-200B	HC-SFS152(B)G7 1/5	MR-J4-200B-RJ020		SC-J2SBJ4KT3K	HG-SR152(B)G7 1/5				
	HC-SFS152(B)G7 1/11				HG-SR152(B)G7 1/11				
	HC-SFS152(B)G7 1/21				HG-SR152(B)G7 1/21				
	HC-SFS152(B)G7 1/33				HG-SR152(B)G7 1/33				
	HC-SFS152(B)G7 1/45				HG-SR152(B)G7 1/45				
	HC-SFS202(B)G7 1/5				HG-SR202(B)G7 1/5		SC-HAJ3PW1C1M		
	HC-SFS202(B)G7 1/11				HG-SR202(B)G7 1/11				
	HC-SFS202(B)G7 1/21				HG-SR202(B)G7 1/21				
	HC-SFS202(B)G7 1/33				HG-SR202(B)G7 1/33				
	HC-SFS202(B)G7 1/45				HG-SR202(B)G7 1/45				
MR-J2S-350B	HC-SFS352(B)G7 1/5	MR-J4-350B-RJ020			HG-SR352(B)G7 1/5				
	HC-SFS352(B)G7 1/11				HG-SR352(B)G7 1/11				
	HC-SFS352(B)G7 1/21				HG-SR352(B)G7 1/21				
MR-J2S-500B	HC-SFS502(B)G7 1/5	MR-J4-500B-RJ020		SC-J2SBJ4KT5K	HG-SR502(B)G7 1/5				
	HC-SFS502(B)G7 1/11				HG-SR502(B)G7 1/11				
MR-J2S-700B	HC-SFS702(B)G7 1/5	MR-J4-700B-RJ020		SC-J2SBJ4KT7K	HG-SR702(B)G7 1/5		Existing cable can be used.		

Refer to Appendix page 2-65 for important points to note.

(9) Existing HC-RFS motor series (standard/with brake, G2 reducer)

○: Compatible; △: Limited functions or compatible with certain conditions; ×: Incompatible

(1)		(2)		(3)	(4)		(5)		(6)	(7)		
Existing model (Note 13)		Primary replacement model (Note 5)			Secondary replacement/simultaneous replacement models							
										Motor side conversion cable		
Servo amplifier model	Servo motor model	Servo amplifier model (Note 1, 12)	SSCNET conversion unit model (Note 1)	Renewal kit model	Servo amplifier model (Note 1)	SSCNET conversion unit model (Note 1)	Servo motor model (Note 1)	Compatibility	Renewal kit model	Power supply conversion cable	Encoder conversion cable	Brake conversion cable
[Medium capacity/ultra-low inertia HC-RFS series, standard/with brake] ((B) represents models with brake)												
MR-J2S-200B	HC-RFS103(B)	MR-J4-200B-RJ020	MR-J4-T20	SC-J2SBJ4KT3K	MR-J4-200B-RJ020	MR-J4-T20	HG-RR103(B)	○	SC-J2SBJ4KT3K	Existing cable can be used.	SC-HAJ3ENM3C1M	Existing cable can be used.
	HC-RFS153(B)						HG-RR153(B)					
MR-J2S-350B	HC-RFS203(B)	MR-J4-350B-RJ020			MR-J4-350B-RJ020		HG-RR203(B)					
MR-J2S-500B	HC-RFS353(B)	MR-J4-500B-RJ020		SC-J2SBJ4KT5K	MR-J4-500B-RJ020		HG-RR353(B)		SC-J2SBJ4KT5K			
	HC-RFS503(B)						HG-RR503(B)					
[Medium capacity/ultra-low inertia HC-RFS series with high-precision reducer (G2)] ((B) represents models with brake)												
MR-J2S-200B	HC-RFS103(B)G2 1/5	MR-J4-200B-RJ020 (Note 10)	MR-J4-T20	SC-J2SBJ4KT3K	MR-J4-100B-RJ020 (Note 10)	MR-J4-T20	HG-SR102(B)G7 1/5	× (Note 3) (Note 4)	(Note 11)	SC-SAJ3PW2KC1M-S2	SC-HAJ3ENM3C1M	(Note 7)
	HC-RFS103(B)G2 1/9						HG-SR102(B)G7 1/11					
	HC-RFS103(B)G2 1/20						HG-SR102(B)G7 1/21					
	HC-RFS103(B)G2 1/29						HG-SR102(B)G7 1/33					
	HC-RFS103(B)G2 1/45						HG-SR102(B)G7 1/45					
	HC-RFS153(B)G2 1/5	MR-J4-200B-RJ020			MR-J4-200B-RJ020		HG-SR152(B)G7 1/5		SC-J2SBJ4KT3K			
	HC-RFS153(B)G2 1/9						HG-SR152(B)G7 1/11					
	HC-RFS153(B)G2 1/20						HG-SR152(B)G7 1/21					
	HC-RFS153(B)G2 1/29						HG-SR152(B)G7 1/33					
	HC-RFS153(B)G2 1/45						HG-SR152(B)G7 1/45					
MR-J2S-350B	HC-RFS203(B)G2 1/5	MR-J4-350B-RJ020 (Note 10)			MR-J4-200B-RJ020 (Note 10)		HG-SR202(B)G7 1/5			SC-J2SJ4PW2C1M		
	HC-RFS203(B)G2 1/9						HG-SR202(B)G7 1/11					
	HC-RFS203(B)G2 1/20						HG-SR202(B)G7 1/21					
	HC-RFS203(B)G2 1/29						HG-SR202(B)G7 1/33					
	HC-RFS203(B)G2 1/45						HG-SR202(B)G7 1/45					
MR-J2S-500B	HC-RFS353(B)G2 1/5	MR-J4-500B-RJ020 (Note 10)		SC-J2SBJ4KT5K	MR-J4-350B-RJ020 (Note 10)		HG-SR352(B)G7 1/5		(Note 11)	SC-HAJ3PW1C1M		
	HC-RFS353(B)G2 1/9						HG-SR352(B)G7 1/11					
	HC-RFS353(B)G2 1/20						HG-SR352(B)G7 1/21					
	HC-RFS353(B)G2 1/29											
	HC-RFS503(B)G2 1/5	MR-J4-500B-RJ020			MR-J4-500B-RJ020		HG-SR502(B)G7 1/5		SC-J2SBJ4KT5K			
	HC-RFS503(B)G2 1/9						HG-SR502(B)G7 1/11					
	HC-RFS503(B)G2 1/20											

Refer to Appendix page 2-65 for important points to note.

(10) Existing HC-RFS motor series (G5, G7 reducer)

○: Compatible; △: Limited functions or compatible with certain conditions; ×: Incompatible

(1)		(2)		(3)	(4)		(5)		(6)	(7)		
Existing model (Note 13)		Primary replacement model (Note 5)			Secondary replacement/simultaneous replacement models							
										Motor side conversion cable		
Servo amplifier model	Servo motor model	Servo amplifier model (Note 1, 12)	SSCNET conversion unit model (Note 1)	Renewal kit model	Servo amplifier model (Note 1)	SSCNET conversion unit model (Note 1)	Servo motor model (Note 1)	Compatibility	Renewal kit model	Power supply conversion cable	Encoder conversion cable	Brake conversion cable
[Medium capacity/ultra-low inertia HC-RFS series with high-precision reducer, flange output type (G5)] ((B) represents models with brake)												
MR-J2S-200B	HC-RFS103(B)G5 1/5	MR-J4-200B-RJ020 (Note 10)	MR-J4-T20	SC-J2SBJ4KT3K	MR-J4-100B-RJ020 (Note 10)	MR-J4-T20	HG-SR102(B)G5 1/5	× (Note 3) (Note 4)	(Note 11)	SC-SAJ3PW2KC1M-S2	SC-HAJ3ENM3C1M	(Note 7)
	HC-RFS103(B)G5 1/11						HG-SR102(B)G5 1/11					
	HC-RFS103(B)G5 1/21						HG-SR102(B)G5 1/21					
	HC-RFS103(B)G5 1/33						HG-SR102(B)G5 1/33					
	HC-RFS103(B)G5 1/45						HG-SR102(B)G5 1/45					
	HC-RFS153(B)G5 1/5	MR-J4-200B-RJ020			MR-J4-200B-RJ020		HG-SR152(B)G5 1/5		SC-J2SBJ4KT3K			
	HC-RFS153(B)G5 1/11						HG-SR152(B)G5 1/11					
	HC-RFS153(B)G5 1/21						HG-SR152(B)G5 1/21					
	HC-RFS153(B)G5 1/33						HG-SR152(B)G5 1/33					
	HC-RFS153(B)G5 1/45						HG-SR152(B)G5 1/45					
MR-J2S-350B	HC-RFS203(B)G5 1/5	MR-J4-350B-RJ020 (Note 10)			MR-J4-200B-RJ020 (Note 10)		HG-SR202(B)G5 1/5			SC-J2SJ4PW2C1M		
	HC-RFS203(B)G5 1/11						HG-SR202(B)G5 1/11					
	HC-RFS203(B)G5 1/21						HG-SR202(B)G5 1/21					
	HC-RFS203(B)G5 1/33						HG-SR202(B)G5 1/33					
	HC-RFS203(B)G5 1/45						HG-SR202(B)G5 1/45					
MR-J2S-500B	HC-RFS353(B)G5 1/5	MR-J4-500B-RJ020 (Note 10)		SC-J2SBJ4KT5K	MR-J4-350B-RJ020 (Note 10)		HG-SR352(B)G5 1/5		(Note 11)	SC-HAJ3PW1C1M		
	HC-RFS353(B)G5 1/11						HG-SR352(B)G5 1/11					
	HC-RFS353(B)G5 1/21						HG-SR352(B)G5 1/21					
	HC-RFS353(B)G5 1/33											
	HC-RFS503(B)G5 1/5	MR-J4-500B-RJ020			MR-J4-500B-RJ020		HG-SR502(B)G5 1/5		SC-J2SBJ4KT5K			
	HC-RFS503(B)G5 1/11						HG-SR502(B)G5 1/11					
	HC-RFS503(B)G5 1/21											
[Medium capacity/ultra-low inertia HC-RFS series with high-precision reducer, flange output type (G7)] ((B) represents models with brake)												
MR-J2S-200B	HC-RFS103(B)G7 1/5	MR-J4-200B-RJ020 (Note 10)	MR-J4-T20	SC-J2SBJ4KT3K	MR-J4-100B-RJ020 (Note 10)	MR-J4-T20	HG-SR102(B)G7 1/5	× (Note 3) (Note 4)	(Note 11)	SC-SAJ3PW2KC1M-S2	SC-HAJ3ENM3C1M	(Note 7)
	HC-RFS103(B)G7 1/11						HG-SR102(B)G7 1/11					
	HC-RFS103(B)G7 1/21						HG-SR102(B)G7 1/21					
	HC-RFS103(B)G7 1/33						HG-SR102(B)G7 1/33					
	HC-RFS103(B)G7 1/45						HG-SR102(B)G7 1/45					
	HC-RFS153(B)G7 1/5	MR-J4-200B-RJ020			MR-J4-200B-RJ020		HG-SR152(B)G7 1/5		SC-J2SBJ4KT3K			
	HC-RFS153(B)G7 1/11						HG-SR152(B)G7 1/11					
	HC-RFS153(B)G7 1/21						HG-SR152(B)G7 1/21					
	HC-RFS153(B)G7 1/33						HG-SR152(B)G7 1/33					
	HC-RFS153(B)G7 1/45						HG-SR152(B)G7 1/45					
MR-J2S-350B	HC-RFS203(B)G7 1/5	MR-J4-350B-RJ020 (Note 10)			MR-J4-200B-RJ020 (Note 10)		HG-SR202(B)G7 1/5			SC-J2SJ4PW2C1M		
	HC-RFS203(B)G7 1/11						HG-SR202(B)G7 1/11					
	HC-RFS203(B)G7 1/21						HG-SR202(B)G7 1/21					
	HC-RFS203(B)G7 1/33						HG-SR202(B)G7 1/33					
	HC-RFS203(B)G7 1/45						HG-SR202(B)G7 1/45					
MR-J2S-500B	HC-RFS353(B)G7 1/5	MR-J4-500B-RJ020 (Note 10)		SC-J2SBJ4KT5K	MR-J4-350B-RJ020 (Note 10)		HG-SR352(B)G7 1/5		(Note 11)	SC-HAJ3PW1C1M		
	HC-RFS353(B)G7 1/11						HG-SR352(B)G7 1/11					
	HC-RFS353(B)G7 1/21						HG-SR352(B)G7 1/21					
	HC-RFS353(B)G7 1/33											
	HC-RFS503(B)G7 1/5	MR-J4-500B-RJ020			MR-J4-500B-RJ020		HG-SR502(B)G7 1/5		SC-J2SBJ4KT5K			
	HC-RFS503(B)G7 1/11						HG-SR502(B)G7 1/11					
	HC-RFS503(B)G7 1/21											

Refer to Appendix page 2-65 for important points to note.

(11) Existing HC-UFS motor series

○: Compatible; △: Limited functions or compatible with certain conditions; ×: Incompatible

(1)		(2)		(3)	(4)		(5)		
Existing model (Note 13)		Primary/secondary/simultaneous replacement models (Note 5, 14)			Secondary replacement/simultaneous replacement models				
Servo amplifier model	Servo motor model	Servo amplifier model (Note 1, 12)	SSCNET conversion unit model (Note 1)	Renewal kit model	Servo motor model (Note 1)	Compatibility	Motor side conversion cable model: Power supply conversion cable	Encoder conversion cable	Brake conversion cable
[Medium capacity/flat type HC-UFS series, standard/with brake] ((B) represents models with brake)									
MR-J2S-70B	HC-UFS72(B)	MR-J4-70B-RJ020	MR-J4-T20	SC-J2SBJ4KT1K	HG-UR72(B)	○	Existing cable can be used.	SC-HAJ3ENM3C1M	Existing cable can be used.
MR-J2S-200B	HC-UFS152(B)	MR-J4-200B-RJ020		SC-J2SBJ4KT3K	HG-UR152(B)				
MR-J2S-350B	HC-UFS202(B)	MR-J4-350B-RJ020			HG-UR202(B)				
MR-J2S-500B	HC-UFS352(B)	MR-J4-500B-RJ020		SC-J2SBJ4KT5K	HG-UR352(B)				
	HC-UFS502(B)				HG-UR502(B)				
Small capacity/flat type HC-UFS series, standard/with brake] ((B) represents models with brake)									
MR-J2S-10B(1)	HC-UFS13(B)	MR-J4-10B(1)-RJ020	MR-J4-T20	SC-J2SBJ4KT02K	HG-KR13(B)	× (Note 3)	Without brake: SC-J2SJ4PW1C03M-■ With brake: SC-J2SJ4PWBK1C03M-■	SC-HAJ3ENM1C03M-■	Built in to power supply conversion cable.
MR-J2S-20B(1)	HC-UFS23(B)	MR-J4-20B(1)-RJ020			HG-KR23(B)				
MR-J2S-40B(1)	HC-UFS43(B)	MR-J4-40B(1)-RJ020		SC-J2SBJ4KT06K	HG-KR43(B)				
MR-J2S-70B	HC-UFS73(B)	MR-J4-70B-RJ020		SC-J2SBJ4KT1K	HG-KR73(B)				

Refer to Appendix page 2-65 for important points to note.

(12) Existing HC-LFS motor series

○: Compatible; △: Limited functions or compatible with certain conditions; ×: Incompatible

(1)		(2)		(3)	(4)		(5)		(6)	(7)		
Existing model (Note 13)		Primary replacement model (Note 5)			Secondary replacement/simultaneous replacement models							
Servo amplifier model	Servo motor model	Servo amplifier model (Note 1, 12)	SSCNET conversion unit model (Note 1)	Renewal kit model	Servo amplifier model (Note 1)	SSCNET conversion unit model (Note 1)	Servo motor model (Note 1)	Compatibility	Motor side conversion cable model: Renewal kit model	Power supply conversion cable	Encoder conversion cable	Brake conversion cable
[Medium capacity/low inertia HC-LFS series, standard/with brake] ((B) represents models with brake)												
MR-J2S-60B	HC-LFS52(B)	MR-J4-60B-RJ020 (Note 10)	MR-J4-T20	SC-J2SBJ4KT06K	MR-J4-70B-RJ020 (Note 10)	MR-J4-T20	HG-JR73(B)	× (Note 3)	(Note 11)	SC-SAJ3PW2KC1M-S2	SC-HAJ3ENM3C1M	(Note 7)
MR-J2S-100B	HC-LFS102(B)	MR-J4-100B-RJ020 (Note 10)		SC-J2SBJ4KT1K	MR-J4-200B-RJ020 (Note 10)		HG-JR153(B)					
MR-J2S-200B	HC-LFS152(B)	MR-J4-200B-RJ020 (Note 10)		SC-J2SBJ4KT3K	MR-J4-350B-RJ020 (Note 10)		HG-JR353(B)		SC-J2SBJ4KT3K	SC-J2SJ4PW2C1M		
MR-J2S-350B	HC-LFS202(B)	MR-J4-350B-RJ020			MR-J4-350B-RJ020					SC-HAJ3PW1C1M		
MR-J2S-500B	HC-LFS302(B)	MR-J4-500B-RJ020		SC-J2SBJ4KT5K	MR-J4-500B-RJ020		HG-JR503(B)		SC-J2SBJ4KT5K			

Refer to Appendix page 2-65 for important points to note.

(13) Existing HA-LFS motor series

○: Compatible; △: Limited functions or compatible with certain conditions; ×: Incompatible

(1)		(2)		(3)	(4)		(5)		(6)	(7)		
Existing model (Note 13)		Primary replacement model (Note 5)			Secondary replacement/simultaneous replacement models							
Servo amplifier model	Servo motor model	Servo amplifier model (Note 1, 12)	SSCNET conversion unit model (Note 1)	Renewal kit model	Servo amplifier model (Note 1)	SSCNET conversion unit model (Note 1)	Servo motor model (Note 1)	Compatibility	Renewal kit model	Motor side conversion cable model: Power supply conversion Cable	Motor side conversion cable model: Encoder Conversion cable	Motor side conversion cable model: Brake/Conversion cable for the cooling fan
[Medium/large capacity/low inertia HA-LFS 1000 r/min series, standard/with brake] ((B) represents models with brake)												
MR-J2S-700B	HA-LFS601(B)	(Note 16)			MR-J4-700B-RJ020	MR-J4-T20	HG-JR601(B) (Note 4)	× (Note 3)	SC-J2SBJ4KT7K	SC-J2SJ4PW3C1M-■	Existing cable can be used	• Existing brake cable can be used. • Cooling fan cable (Note 9)
MR-J2S-11KB	HA-LFS801(B)				MR-J4-11KB-RJ020		HG-JR801(B) (Note 4)		SC-J2SBJ4KT15K			
	HA-LFS12K1(B)						HG-JR12K1(B) (Note 4)					
MR-J2S-15KB	HA-LFS15K1				MR-J4-15KB-RJ020		HG-JR15K1			(Note 8)	(Note 17)	• Cooling fan conversion cable SC-J2SJ4FAN1C1M
MR-J2S-22KB	HA-LFS20K1				MR-J4-22KB-RJ020		HG-JR20K1		SC-J2SBJ4KT22K			
	HA-LFS25K1						HG-JR25K1					
MR-J2S-30KB	HA-LFS30K1				MR-J4-DU30KB-RJ020 (Note 20)		HG-JR30K1 (Note 4)		SC-J2SJ4BS09 (Note 18)			
MR-J2S-37KB	HA-LFS37K1				MR-J4-DU37KB-RJ020 (Note 20)		HG-JR37K1					
[Medium/large capacity/low inertia HA-LFS 1500 r/min series, standard/with brake] ((B) represents models with brake)												
MR-J2S-700B	HA-LFS701M(B)	(Note 16)			MR-J4-700B-RJ020	MR-J4-T20	HG-JR701M(B) (Note 4)	× (Note 3)	SC-J2SBJ4KT7K	SC-J2SJ4PW3C1M-■	Existing cable can be used	• Existing brake cable can be used. • Cooling fan cable (Note 9)
MR-J2S-11KB	HA-LFS11K1M(B)				MR-J4-11KB-RJ020		HG-JR11K1M(B)		SC-J2SBJ4KT15K			
MR-J2S-15KB	HA-LFS15K1M(B)				MR-J4-15KB-RJ020		HG-JR15K1M(B) (Note 4)					
MR-J2S-22KB	HA-LFS22K1M				MR-J4-22KB-RJ020		HG-JR22K1M		SC-J2SBJ4KT22K	(Note 8)	(Note 17)	• Cooling fan conversion cable SC-J2SJ4FAN1C1M
MR-J2S-30KB	HA-LFS30K1M				MR-J4-DU30KB-RJ020 (Note 20)		HG-JR30K1M		SC-J2SJ4BS09 (Note 18)			
MR-J2S-37KB	HA-LFS37K1M				MR-J4-DU37KB-RJ020 (Note 20)		HG-JR37K1M					
[Medium/large capacity/low inertia HA-LFS 2000 r/min series, standard/with brake] ((B) represents models with brake)												
MR-J2S-500B	HA-LFS502	MR-J4-500B-RJ020	MR-J4-T20	SC-J2SBJ4KT5K	MR-J4-500B-RJ020	MR-J4-T20	HG-SR502	× (Note 3)	SC-J2SBJ4KT5K	SC-HAJ3PW1C1M	SC-HAJ3ENM3C1M	
MR-J2S-700B	HA-LFS702	MR-J4-700B-RJ020		SC-J2SBJ4KT7K	MR-J4-700B-RJ020		HG-SR702		SC-J2SBJ4KT7K	Existing cable can be used		
MR-J2S-11KB	HA-LFS11K2(B)	MR-J4-11KB-RJ020		SC-J2SBJ4KT15K	MR-J4-11KB-RJ020		HG-JR11K1M(B) (Note 4)		SC-J2SBJ4KT15K	SC-J2SJ4PW3C1M-■	Existing cable can be used	• Existing brake cable can be used. • Cooling fan cable (Note 9)
MR-J2S-15KB	HA-LFS15K2(B)	MR-J4-15KB-RJ020 (Note 10)		SC-J2SBJ4KT15K	MR-J4-11KB-RJ020 (Note 10)		HG-JR11K1M(B)					
MR-J2S-22KB	HA-LFS22K2(B)	MR-J4-22KB-RJ020 (Note 10)		SC-J2SBJ4KT22K	MR-J4-15KB-RJ020 (Note 10)		HG-JR15K1M(B)		(Note 11)			
MR-J2S-30KB	HA-LFS30K2	MR-J4-DU30KB-RJ020 (Note 10, 20)		SC-J2SJ4BS09 (Note 18)	MR-J4-22KB-RJ020 (Note 10)		HG-JR22K1M			(Note 8)	(Note 17)	• Cooling fan conversion cable SC-J2SJ4FAN1C1M
MR-J2S-37KB	HA-LFS37K2	MR-J4-DU37KB-RJ020 (Note 10, 20)			MR-J4-DU30KB-RJ020 (Note 10, 20)		HG-JR30K1M		SC-J2SJ4BS09 (Note 18)			

Refer to Appendix page 2-65 for important points to note.

4.3 Built-in Positioning Function Replacement Combination List

(1) Existing HC-KFS motor series (standard/with brake, G1, G2 reducer)

○: Compatible; △: Limited functions or compatible with certain conditions; ×: Incompatible

(1)		(2)	(3)	(4)		(5)		
Existing model (Note 13)		Primary/secondary/simultaneous replacement models (Note 5, 14)		Secondary replacement/simultaneous replacement models				
						Motor side conversion cable model		
Servo amplifier model	Servo motor model	Servo amplifier model (Note 1, 12)	Renewal kit model	Servo motor model (Note 1)	Compatibility	Power supply conversion cable	Encoder conversion cable	Brake conversion cable
[Small capacity/low inertia HC-KFS series, standard/with brake] ((B) represents models with brake)								
MR-J2S-10CP(1)	HC-KFS053(B)	MR-J4-10A(1)-RJ	SC-J2SCP J4KT02K	HG-KR053(B)	△ (Note 4)	Without brake: SC-J2SJ4PW1C03M-■ With brake: SC-J2SJ4PWBK1C03M-■	SC-HAJ3ENM1C03M-■	Built in to power supply conversion cable.
	HC-KFS13(B)			HG-KR13(B)				
MR-J2S-20CP(1)	HC-KFS23(B)	MR-J4-20A(1)–RJ		HG-KR23(B)				
MR-J2S-40CP(1)	HC-KFS43(B)	MR-J4-40A(1)-RJ	SC-J2SCP J4KT06K	HG-KR43(B)				
MR-J2S-70CP	HC-KFS73(B)	MR-J4-70A-RJ	SC-J2SCP J4KT1K	HG-KR73(B)				
[Small capacity/low inertia HC-KFS series with general reducer (G1)] ((B) represents models with brake)								
MR-J2S-10CP(1)	HC-KFS053(B)G1 1/5	MR-J4-10A(1)-RJ	SC-J2SCP J4KT02K	HG-KR053(B)G1 1/5	△ (Note 4)	Without brake: SC-J2SJ4PW1C03M-■ With brake: SC-J2SJ4PWBK1C03M-■	SC-HAJ3ENM1C03M-■	Built in to power supply conversion cable.
	HC-KFS053(B)G1 1/12			HG-KR053(B)G1 1/12				
	HC-KFS053(B)G1 1/20			HG-KR053(B)G1 1/20				
	HC-KFS13(B)G1 1/5			HG-KR13(B)G1 1/5				
	HC-KFS13(B)G1 1/12			HG-KR13(B)G1 1/12				
	HC-KFS13(B)G1 1/20			HG-KR13(B)G1 1/20				
MR-J2S-20CP(1)	HC-KFS23(B)G1 1/5	MR-J4-20A(1)-RJ		HG-KR23(B)G1 1/5				
	HC-KFS23(B)G1 1/12			HG-KR23(B)G1 1/12 (Note 2)				
	HC-KFS23(B)G1 1/20			HG-KR23(B)G1 1/20 (Note 2)				
MR-J2S-40CP(1)	HC-KFS43(B)G1 1/5	MR-J4-40A(1)-RJ	SC-J2SCP J4KT06K	HG-KR43(B)G1 1/5				
	HC-KFS43(B)G1 1/12			HG-KR43(B)G1 1/12 (Note 2)				
	HC-KFS43(B)G1 1/20			HG-KR43(B)G1 1/20 (Note 2)				
MR-J2S-70A	HC-KFS73(B)G1 1/5	MR-J4-70A-RJ	SC-J2SCP J4KT1K	HG-KR73(B)G1 1/5				
	HC-KFS73(B)G1 1/12			HG-KR73(B)G1 1/12 (Note 2)				
	HC-KFS73(B)G1 1/20			HG-KR73(B)G1 1/20				
[Small capacity/low inertia HC-KFS series with high-precision reducer (G2)] ((B) represents models with brake)								
MR-J2S-10CP(1)	HC-KFS053(B)G2 1/5	MR-J4-10A(1)-RJ	SC-J2SCP J4KT02K	HG-KR053(B)G7 1/5	× (Note 3) (Note 4)	Without brake: SC-J2SJ4PW1C03M-■ With brake: SC-J2SJ4PWBK1C03M-■	SC-HAJ3ENM1C03M-■	Built in to power supply conversion cable.
	HC-KFS053(B)G2 1/9			HG-KR053(B)G7 1/11				
	HC-KFS053(B)G2 1/20			HG-KR053(B)G7 1/21				
	HC-KFS053(B)G2 1/29			HG-KR053(B)G7 1/33				
	HC-KFS13(B)G2 1/5			HG-KR13(B)G7 1/5				
	HC-KFS13(B)G2 1/9			HG-KR13(B)G7 1/11				
	HC-KFS13(B)G2 1/20			HG-KR13(B)G7 1/21				
	HC-KFS13(B)G2 1/29			HG-KR13(B)G7 1/33				
MR-J2S-20CP(1)	HC-KFS23(B)G2 1/5	MR-J4-20A(1)-RJ		HG-KR23(B)G7 1/5				
	HC-KFS23(B)G2 1/9			HG-KR23(B)G7 1/11				
	HC-KFS23(B)G2 1/20			HG-KR23(B)G7 1/21				
	HC-KFS23(B)G2 1/29			HG-KR23(B)G7 1/33				
MR-J2S-40CP(1)	HC-KFS43(B)G2 1/5	MR-J4-40A(1)-RJ	SC-J2SCP J4KT06K	HG-KR43(B)G7 1/5				
	HC-KFS43(B)G2 1/9			HG-KR43(B)G7 1/11				
	HC-KFS43(B)G2 1/20			HG-KR43(B)G7 1/21				
	HC-KFS43(B)G2 1/29			HG-KR43(B)G7 1/33				
MR-J2S-70CP	HC-KFS73(B)G2 1/5	MR-J4-70A-RJ	SC-J2SCP J4KT1K	HG-KR73(B)G7 1/5				
	HC-KFS73(B)G2 1/9			HG-KR73(B)G7 1/11				
	HC-KFS73(B)G2 1/20			HG-KR73(B)G7 1/21				
	HC-KFS73(B)G2 1/29			HG-KR73(B)G7 1/33				

Refer to Appendix page 2-65 for important points to note.

(2) Existing HC-KFS motor series (G5, G7 reducer)

○: Compatible; △: Limited functions or compatible with certain conditions; ×: Incompatible

(1)		(2)	(3)	(4)		(5)		
Existing model (Note 13)		Primary/secondary/simultaneous replacement models (Note 5, 14)		Secondary replacement/simultaneous replacement models				
Servo amplifier model	Servo motor model	Servo amplifier model (Note 1, 12)	Renewal kit model	Servo motor model (Note 1)	Compatibility	Motor side conversion cable model: Power supply conversion cable	Motor side conversion cable model: Encoder conversion cable	Motor side conversion cable model: Brake conversion cable
[Small capacity/low inertia HC-KFS series with high-precision reducer, flange output type (G5)] ((B) represents models with brake)								
MR-J2S-10CP(1)	HC-KFS053(B)G5 1/5	MR-J4-10A(1)-RJ	SC-J2SCP J4KT02K	HG-KR053(B)G5 1/5	△ (Note 4)	Without brake: SC-J2SJ4PW1C03M-■ With brake: SC-J2SJ4PWBK1C03M-■	SC-HAJ3ENM1C03M-■	Built in to power supply conversion cable.
	HC-KFS053(B)G5 1/11			HG-KR053(B)G5 1/11				
	HC-KFS053(B)G5 1/21			HG-KR053(B)G5 1/21				
	HC-KFS053(B)G5 1/33			HG-KR053(B)G5 1/33				
	HC-KFS053(B)G5 1/45			HG-KR053(B)G5 1/45				
	HC-KFS13(B)G5 1/5			HG-KR13(B)G5 1/5				
	HC-KFS13(B)G5 1/11			HG-KR13(B)G5 1/11				
	HC-KFS13(B)G5 1/21			HG-KR13(B)G5 1/21				
	HC-KFS13(B)G5 1/33			HG-KR13(B)G5 1/33				
	HC-KFS13(B)G5 1/45			HG-KR13(B)G5 1/45				
MR-J2S-20CP(1)	HC-KFS23(B)G5 1/5	MR-J4-20A(1)-RJ		HG-KR23(B)G5 1/5				
	HC-KFS23(B)G5 1/11			HG-KR23(B)G5 1/11				
	HC-KFS23(B)G5 1/21			HG-KR23(B)G5 1/21				
	HC-KFS23(B)G5 1/33			HG-KR23(B)G5 1/33				
	HC-KFS23(B)G5 1/45			HG-KR23(B)G5 1/45				
MR-J2S-40CP(1)	HC-KFS43(B)G5 1/5	MR-J4-40A(1)-RJ	SC-J2SCP J4KT06K	HG-KR43(B)G5 1/5				
	HC-KFS43(B)G5 1/11			HG-KR43(B)G5 1/11				
	HC-KFS43(B)G5 1/21			HG-KR43(B)G5 1/21				
	HC-KFS43(B)G5 1/33			HG-KR43(B)G5 1/33				
	HC-KFS43(B)G5 1/45			HG-KR43(B)G5 1/45				
MR-J2S-70CP	HC-KFS73(B)G5 1/5	MR-J4-70A-RJ	SC-J2SCP J4KT1K	HG-KR73(B)G5 1/5				
	HC-KFS73(B)G5 1/11			HG-KR73(B)G5 1/11				
	HC-KFS73(B)G5 1/21			HG-KR73(B)G5 1/21				
	HC-KFS73(B)G5 1/33			HG-KR73(B)G5 1/33				
	HC-KFS73(B)G5 1/45			HG-KR73(B)G5 1/45				
[Small capacity/low inertia HC-KFS series with high-precision reducer, shaft output type (G7)] ((B) represents models with brake)								
MR-J2S-10CP(1)	HC-KFS053(B)G7 1/5	MR-J4-10A(1)-RJ	SC-J2SCP J4KT02K	HG-KR053(B)G7 1/5	△ (Note 4)	Without brake: SC-J2SJ4PW1C03M-■ With brake: SC-J2SJ4PWBK1C03M-■	SC-HAJ3ENM1C03M-■	Built in to power supply conversion cable.
	HC-KFS053(B)G7 1/11			HG-KR053(B)G7 1/11				
	HC-KFS053(B)G7 1/21			HG-KR053(B)G7 1/21				
	HC-KFS053(B)G7 1/33			HG-KR053(B)G7 1/33				
	HC-KFS053(B)G7 1/45			HG-KR053(B)G7 1/45				
	HC-KFS13(B)G7 1/5			HG-KR13(B)G7 1/5				
	HC-KFS13(B)G7 1/11			HG-KR13(B)G7 1/11				
	HC-KFS13(B)G7 1/21			HG-KR13(B)G7 1/21				
	HC-KFS13(B)G7 1/33			HG-KR13(B)G7 1/33				
	HC-KFS13(B)G7 1/45			HG-KR13(B)G7 1/45				
MR-J2S-20CP(1)	HC-KFS23(B)G7 1/5	MR-J4-20A(1)-RJ		HG-KR23(B)G7 1/5				
	HC-KFS23(B)G7 1/11			HG-KR23(B)G7 1/11				
	HC-KFS23(B)G7 1/21			HG-KR23(B)G7 1/21				
	HC-KFS23(B)G7 1/33			HG-KR23(B)G7 1/33				
	HC-KFS23(B)G7 1/45			HG-KR23(B)G7 1/45				
MR-J2S-40CP(1)	HC-KFS43(B)G7 1/5	MR-J4-40A(1)-RJ	SC-J2SCP J4KT06K	HG-KR43(B)G7 1/5				
	HC-KFS43(B)G7 1/11			HG-KR43(B)G7 1/11				
	HC-KFS43(B)G7 1/21			HG-KR43(B)G7 1/21				
	HC-KFS43(B)G7 1/33			HG-KR43(B)G7 1/33				
	HC-KFS43(B)G7 1/45			HG-KR43(B)G7 1/45				
MR-J2S-70CP	HC-KFS73(B)G7 1/5	MR-J4-70A-RJ	SC-J2SCP J4KT1K	HG-KR73(B)G7 1/5				
	HC-KFS73(B)G7 1/11			HG-KR73(B)G7 1/11				
	HC-KFS73(B)G7 1/21			HG-KR73(B)G7 1/21				
	HC-KFS73(B)G7 1/33			HG-KR73(B)G7 1/33				
	HC-KFS73(B)G7 1/45			HG-KR73(B)G7 1/45				

Refer to Appendix page 2-65 for important points to note.

(3) Existing HC-KFS46, KFS410 motor

○: Compatible; △: Limited functions or compatible with certain conditions; ×: Incompatible

(1)		(2)	(3)	(4)	(5)		(6)	(7)		
Existing model (Note 13)		Primary replacement model (Note 5)		Secondary replacement/simultaneous replacement models						
Servo amplifier model	Servo motor model	Servo amplifier model (Note 1, 12)	Renewal kit model	Servo amplifier model (Note 1)	Servo motor model (Note 1)	Compatibility	Renewal kit model	Motor side conversion cable model		
								Power supply conversion cable	Encoder conversion cable	Brake conversion cable
[Small capacity/low inertia HC-KFS series, standard/with brake] ((B) represents models with brake)										
MR-J2S-70CP	HC-KFS46 HC-KFS410	MR-J4-70A-RJ (Note 10)	SC-J2SCP J4KT1K	MR-J4-40A-RJ (Note 10)	HG-KR43	△ (Note 4) (Note 15)	(Note 11)	Without brake: SC-J2SJ4PW1C03M-■ With brake: SC-J2SJ4PWBK1C03M-■	SC-HAJ3ENM1C03M-■	Built in to power supply conversion cable.

Refer to Appendix page 2-65 for important points to note.

(4) Existing HC-MFS motor series (standard/with brake, G1, G2 reducer)

○: Compatible; △: Limited functions or compatible with certain conditions; ×: Incompatible

(1)		(2)	(3)	(4)		(5)		
Existing model (Note 13)		Primary/secondary/simultaneous replacement models (Note 5, 14)		Secondary replacement/simultaneous replacement models				
						Motor side conversion cable model		
Servo amplifier model	Servo motor model	Servo amplifier model (Note 1, 12)	Renewal kit model	Servo motor model (Note 1)	Compatibility	Power supply conversion cable	Encoder conversion cable	Brake conversion cable
[Small capacity/ultra-low inertia HC-MFS series, standard/with brake] ((B) represents models with brake)								
MR-J2S-10CP(1)	HC-MFS053(B)	MR-J4-10A(1)-RJ	SC-J2SCP J4KT02K	HG-MR053(B)	○	Without brake: SC-J2SJ4PW1C03M-■ With brake: SC-J2SJ4PWBK1C03M-■	SC-HAJ3ENM1C03M-■	Built in to power supply conversion cable.
	HC-MFS13(B)			HG-MR13(B)				
MR-J2S-20CP(1)	HC-MFS23(B)	MR-J4-20A(1)-RJ		HG-MR23(B)				
MR-J2S-40CP(1)	HC-MFS43(B)	MR-J4-40A(1)-RJ	SC-J2SCP J4KT06K	HG-MR43(B)				
MR-J2S-70CP	HC-MFS73(B)	MR-J4-70A-RJ	SC-J2SCP J4KT1K	HG-MR73(B)				
[Small capacity/ultra-low inertia HC-MFS series with general reducer (G1)] ((B) represents models with brake)								
MR-J2S-10CP(1)	HC-MFS053(B)G1 1/5	MR-J4-10A(1)-RJ	SC-J2SCP J4KT02K	HG-KR053(B)G1 1/5	△ (Note 4)	Without brake: SC-J2SJ4PW1C03M-■ With brake: SC-J2SJ4PWBK1C03M-■	SC-HAJ3ENM1C03M-■	Built in to power supply conversion cable.
	HC-MFS053(B)G1 1/12			HG-KR053(B)G1 1/12				
	HC-MFS053(B)G1 1/20			HG-KR053(B)G1 1/20				
	HC-MFS13(B)G1 1/5			HG-KR13(B)G1 1/5				
	HC-MFS13(B)G1 1/12			HG-KR13(B)G1 1/12				
	HC-MFS13(B)G1 1/20			HG-KR13(B)G1 1/20				
MR-J2S-20CP(1)	HC-MFS23(B)G1 1/5	MR-J4-20A(1)-RJ		HG-KR23(B)G1 1/5				
	HC-MFS23(B)G1 1/12			HG-KR23(B)G1 1/12 (Note 2)				
	HC-MFS23(B)G1 1/20			HG-KR23(B)G1 1/20 (Note 2)				
MR-J2S-40CP(1)	HC-MFS43(B)G1 1/5	MR-J4-40A(1)-RJ	SC-J2SCP J4KT06K	HG-KR43(B)G1 1/5				
	HC-MFS43(B)G1 1/12			HG-KR43(B)G1 1/12 (Note 2)				
	HC-MFS43(B)G1 1/20			HG-KR43(B)G1 1/20 (Note 2)				
MR-J2S-70CP	HC-MFS73(B)G1 1/5	MR-J4-70A-RJ	SC-J2SCP J4KT1K	HG-KR73(B)G1 1/5				
	HC-MFS73(B)G1 1/12			HG-KR73(B)G1 1/12 (Note 2)				
	HC-MFS73(B)G1 1/20			HG-KR73(B)G1 1/20				
[Small capacity/ultra-low inertia HC-MFS series with high-precision reducer (G2)] ((B) represents models with brake)								
MR-J2S-10CP(1)	HC-MFS053(B)G2 1/5	MR-J4-10A(1)-RJ	SC-J2SCP J4KT02K	HG-KR053(B)G7 1/5	× (Note 3) (Note 4)	Without brake: SC-J2SJ4PW1C03M-■ With brake: SC-J2SJ4PWBK1C03M-■	SC-HAJ3ENM1C03M-■	Built in to power supply conversion cable.
	HC-MFS053(B)G2 1/9			HG-KR053(B)G7 1/11				
	HC-MFS053(B)G2 1/20			HG-KR053(B)G7 1/21				
	HC-MFS053(B)G2 1/29			HG-KR053(B)G7 1/33				
	HC-MFS13(B)G2 1/5			HG-KR13(B)G7 1/5				
	HC-MFS13(B)G2 1/9			HG-KR13(B)G7 1/11				
	HC-MFS13(B)G2 1/20			HG-KR13(B)G7 1/21				
	HC-MFS13(B)G2 1/29			HG-KR13(B)G7 1/33				
MR-J2S-20CP(1)	HC-MFS23(B)G2 1/5	MR-J4-20A(1)-RJ		HG-KR23(B)G7 1/5				
	HC-MFS23(B)G2 1/9			HG-KR23(B)G7 1/11				
	HC-MFS23(B)G2 1/20			HG-KR23(B)G7 1/21				
	HC-MFS23(B)G2 1/29			HG-KR23(B)G7 1/33				
MR-J2S-40CP(1)	HC-MFS43(B)G2 1/5	MR-J4-40A(1)-RJ	SC-J2SCP J4KT06K	HG-KR43(B)G7 1/5				
	HC-MFS43(B)G2 1/9			HG-KR43(B)G7 1/11				
	HC-MFS43(B)G2 1/20			HG-KR43(B)G7 1/21				
	HC-MFS43(B)G2 1/29			HG-KR43(B)G7 1/33				
MR-J2S-70CP	HC-MFS73(B)G2 1/5	MR-J4-70A-RJ	SC-J2SCP J4KT1K	HG-KR73(B)G7 1/5				
	HC-MFS73(B)G2 1/9			HG-KR73(B)G7 1/11				
	HC-MFS73(B)G2 1/20			HG-KR73(B)G7 1/21				
	HC-MFS73(B)G2 1/29			HG-KR73(B)G7 1/33				

Refer to Appendix page 2-65 for important points to note.

(5) Existing HC-MFS motor series (G5, G7 reducer)

○: Compatible; △: Limited functions or compatible with certain conditions; ×: Incompatible

(1)		(2)	(3)	(4)		(5)		
Existing model (Note 13)		Primary/secondary/simultaneous replacement models (Note 5, 14)		Secondary replacement/simultaneous replacement models				
						Motor side conversion cable model		
Servo amplifier model	Servo motor model	Servo amplifier model (Note 1, 12)	Renewal kit model	Servo motor model (Note 1)	Compatibility	Power supply conversion cable	Encoder conversion cable	Brake conversion cable
[Small capacity/ultra-low inertia HC-MFS series with high-precision reducer, flange output type (G5)] ((B) represents models with brake)								
MR-J2S-10CP(1)	HC-MFS053(B)G5 1/5	MR-J4-10A(1)-RJ	SC-J2SCP J4KT02K	HG-KR053(B)G5 1/5	△ (Note 4)	Without brake: SC-J2SJ4PW1C03M-■ With brake: SC-J2SJ4PWBK1C03M-■	SC-HAJ3ENM1C03M-■	Built in to power supply conversion cable.
	HC-MFS053(B)G5 1/11			HG-KR053(B)G5 1/11				
	HC-MFS053(B)G5 1/21			HG-KR053(B)G5 1/21				
	HC-MFS053(B)G5 1/33			HG-KR053(B)G5 1/33				
	HC-MFS053(B)G5 1/45			HG-KR053(B)G5 1/45				
	HC-MFS13(B)G5 1/5			HG-KR13(B)G5 1/5				
	HC-MFS13(B)G5 1/11			HG-KR13(B)G5 1/11				
	HC-MFS13(B)G5 1/21			HG-KR13(B)G5 1/21				
	HC-MFS13(B)G5 1/33			HG-KR13(B)G5 1/33				
	HC-MFS13(B)G5 1/45			HG-KR13(B)G5 1/45				
MR-J2S-20CP(1)	HC-MFS23(B)G5 1/5	MR-J4-20A(1)-RJ		HG-KR23(B)G5 1/5				
	HC-MFS23(B)G5 1/11			HG-KR23(B)G5 1/11				
	HC-MFS23(B)G5 1/21			HG-KR23(B)G5 1/21				
	HC-MFS23(B)G5 1/33			HG-KR23(B)G5 1/33				
	HC-MFS23(B)G5 1/45			HG-KR23(B)G5 1/45				
MR-J2S-40CP(1)	HC-MFS43(B)G5 1/5	MR-J4-40A(1)-RJ	SC-J2SCP J4KT06K	HG-KR43(B)G5 1/5				
	HC-MFS43(B)G5 1/11			HG-KR43(B)G5 1/11				
	HC-MFS43(B)G5 1/21			HG-KR43(B)G5 1/21				
	HC-MFS43(B)G5 1/33			HG-KR43(B)G5 1/33				
	HC-MFS43(B)G5 1/45			HG-KR43(B)G5 1/45				
MR-J2S-70CP	HC-MFS73(B)G5 1/5	MR-J4-70A-RJ	SC-J2SCP J4KT1K	HG-KR73(B)G5 1/5				
	HC-MFS73(B)G5 1/11			HG-KR73(B)G5 1/11				
	HC-MFS73(B)G5 1/21			HG-KR73(B)G5 1/21				
	HC-MFS73(B)G5 1/33			HG-KR73(B)G5 1/33				
	HC-MFS73(B)G5 1/45			HG-KR73(B)G5 1/45				
[Small capacity/low inertia HC-MFS series with high-precision reducer, shaft output type (G7)] ((B) represents models with brake)								
MR-J2S-10CP(1)	HC-MFS053(B)G7 1/5	MR-J4-10A(1)-RJ	SC-J2SCP J4KT02K	HG-KR053(B)G7 1/5	△ (Note 4)	Without brake: SC-J2SJ4PW1C03M-■ With brake: SC-J2SJ4PWBK1C03M-■	SC-HAJ3ENM1C03M-■	Built in to power supply conversion cable.
	HC-MFS053(B)G7 1/11			HG-KR053(B)G7 1/11				
	HC-MFS053(B)G7 1/21			HG-KR053(B)G7 1/21				
	HC-MFS053(B)G7 1/33			HG-KR053(B)G7 1/33				
	HC-MFS053(B)G7 1/45			HG-KR053(B)G7 1/45				
	HC-MFS13(B)G7 1/5			HG-KR13(B)G7 1/5				
	HC-MFS13(B)G7 1/11			HG-KR13(B)G7 1/11				
	HC-MFS13(B)G7 1/21			HG-KR13(B)G7 1/21				
	HC-MFS13(B)G7 1/33			HG-KR13(B)G7 1/33				
	HC-MFS13(B)G7 1/45			HG-KR13(B)G7 1/45				
MR-J2S-20CP(1)	HC-MFS23(B)G7 1/5	MR-J4-20A(1)-RJ		HG-KR23(B)G7 1/5				
	HC-MFS23(B)G7 1/11			HG-KR23(B)G7 1/11				
	HC-MFS23(B)G7 1/21			HG-KR23(B)G7 1/21				
	HC-MFS23(B)G7 1/33			HG-KR23(B)G7 1/33				
	HC-MFS23(B)G7 1/45			HG-KR23(B)G7 1/45				
MR-J2S-40CP(1)	HC-MFS43(B)G7 1/5	MR-J4-40A(1)-RJ	SC-J2SCP J4KT06K	HG-KR43(B)G7 1/5				
	HC-MFS43(B)G7 1/11			HG-KR43(B)G7 1/11				
	HC-MFS43(B)G7 1/21			HG-KR43(B)G7 1/21				
	HC-MFS43(B)G7 1/33			HG-KR43(B)G7 1/33				
	HC-MFS43(B)G7 1/45			HG-KR43(B)G7 1/45				
MR-J2S-70CP	HC-MFS73(B)G7 1/5	MR-J4-70A-RJ	SC-J2SCP J4KT1K	HG-KR73(B)G7 1/5				
	HC-MFS73(B)G7 1/11			HG-KR73(B)G7 1/11				
	HC-MFS73(B)G7 1/21			HG-KR73(B)G7 1/21				
	HC-MFS73(B)G7 1/33			HG-KR73(B)G7 1/33				
	HC-MFS73(B)G7 1/45			HG-KR73(B)G7 1/45				

Refer to Appendix page 2-65 for important points to note.

(6) Existing HC-SFS motor series (standard/with brake, G2 reducer)

○: Compatible; △: Limited functions or compatible with certain conditions; ×: Incompatible

(1)		(2)	(3)	(4)		(5)		
Existing model (Note 13)		Primary/secondary/simultaneous replacement models (Note 5, 14)		Secondary replacement/simultaneous replacement models				
Servo amplifier model	Servo motor model	Servo amplifier model (Note 1, 12)	Renewal kit model	Servo motor model (Note 1)	Compatibility	Motor side conversion cable model: Power supply conversion cable	Encoder conversion cable	Brake conversion cable
[Medium capacity/medium inertia HC-SFS series, standard/with brake] ((B) represents models with brake)								
MR-J2S-60CP	HC-SFS52(B)	MR-J4-60A-RJ	SC-J2SCP J4KT06K	HG-SR52(B)	△ (Note 6)	SC-SAJ3PW2KC1M-S2	SC-HAJ3ENM3C1M	(Note 7)
	HC-SFS53(B)							
MR-J2S-100CP	HC-SFS81(B)	MR-J4-100A-RJ	SC-J2SCP J4KT1K	HG-SR81(B)				
	HC-SFS102(B)			HG-SR102(B)				
	HC-SFS103(B)							
MR-J2S-200CP	HC-SFS121(B)	MR-J4-200A-RJ	SC-J2SCP J4KT3K	HG-SR121(B)		SC-HAJ3PW1C1M		
	HC-SFS152(B)			HG-SR152(B)		SC-SAJ3PW2KC1M-S2		
	HC-SFS153(B)							
	HC-SFS201(B)			HG-SR201(B)		SC-HAJ3PW1C1M		
	HC-SFS202(B)			HG-SR202(B)				
	HC-SFS203(B)							
MR-J2S-350CP	HC-SFS301(B)	MR-J4-350A-RJ		HG-SR301(B)				
	HC-SFS352(B)			HG-SR352(B)				
	HC-SFS353(B)							
MR-J2S-500CP	HC-SFS502(B)	MR-J4-500A-RJ	SC-J2SCP J4KT5K	HG-SR502(B)				
MR-J2S-700CP	HC-SFS702(B)	MR-J4-700A-RJ	SC-J2SCP J4KT7K	HG-SR702(B)		Existing cable can be used.		
[Medium capacity/medium inertia HC-SFS series with high-precision reducer (G2)] ((B) represents models with brake)								
MR-J2S-60CP	HC-SFS52(B)G2 1/5	MR-J4-60A-RJ	SC-J2SCP J4KT06K	HG-SR52(B)G7 1/5	× (Note 3) (Note 6)	SC-SAJ3PW2KC1M-S2	SC-HAJ3ENM3C1M	(Note 7)
	HC-SFS52(B)G2 1/9			HG-SR52(B)G7 1/11				
	HC-SFS52(B)G2 1/20			HG-SR52(B)G7 1/21				
	HC-SFS52(B)G2 1/29			HG-SR52(B)G7 1/33				
	HC-SFS52(B)G2 1/45			HG-SR52(B)G7 1/45				
MR-J2S-100CP	HC-SFS102(B)G2 1/5	MR-J4-100A-RJ	SC-J2SCP J4KT1K	HG-SR102(B)G7 1/5				
	HC-SFS102(B)G2 1/9			HG-SR102(B)G7 1/11				
	HC-SFS102(B)G2 1/20			HG-SR102(B)G7 1/21				
	HC-SFS102(B)G2 1/29			HG-SR102(B)G7 1/33				
	HC-SFS102(B)G2 1/45			HG-SR102(B)G7 1/45				
MR-J2S-200CP	HC-SFS152(B)G2 1/5	MR-J4-200A-RJ	SC-J2SCP J4KT3K	HG-SR152(B)G7 1/5				
	HC-SFS152(B)G2 1/9			HG-SR152(B)G7 1/11				
	HC-SFS152(B)G2 1/20			HG-SR152(B)G7 1/21				
	HC-SFS152(B)G2 1/29			HG-SR152(B)G7 1/33				
	HC-SFS152(B)G2 1/45			HG-SR152(B)G7 1/45				
	HC-SFS202(B)G2 1/5			HG-SR202(B)G7 1/5		SC-HAJ3PW1C1M		
	HC-SFS202(B)G2 1/9			HG-SR202(B)G7 1/11				
	HC-SFS202(B)G2 1/20			HG-SR202(B)G7 1/21				
	HC-SFS202(B)G2 1/29			HG-SR202(B)G7 1/33				
	HC-SFS202(B)G2 1/45			HG-SR202(B)G7 1/45				
MR-J2S-350CP	HC-SFS352(B)G2 1/5	MR-J4-350A-RJ		HG-SR352(B)G7 1/5				
	HC-SFS352(B)G2 1/9			HG-SR352(B)G7 1/11				
	HC-SFS352(B)G2 1/20			HG-SR352(B)G7 1/21				
MR-J2S-500CP	HC-SFS502(B)G2 1/5	MR-J4-500A-RJ	SC-J2SCP J4KT5K	HG-SR502(B)G7 1/5				
	HC-SFS502(B)G2 1/9			HG-SR502(B)G7 1/11				
MR-J2S-700CP	HC-SFS702(B)G2 1/5	MR-J4-700A-RJ	SC-J2SCP J4KT7K	HG-SR702(B)G7 1/5		Existing cable can be used.		

Refer to Appendix page 2-65 for important points to note.

(7) Existing HC-SFS motor series (G1 reducer)

○: Compatible; △: Limited functions or compatible with certain conditions; ×: Incompatible

(1)		(2)	(3)	(4)		(5)		
Existing model (Note 13)		Primary/secondary/simultaneous replacement models (Note 5, 14)		Secondary replacement/simultaneous replacement models				
Servo amplifier model	Servo motor model	Servo amplifier model (Note 1, 12)	Renewal kit model	Servo motor model (Note 1)	Compatibility	Motor side conversion cable model: Power supply conversion cable	Encoder conversion cable	Brake conversion cable
[Medium capacity/medium inertia HC-SFS series with general reducer (G1)] ((B) represents models with brake, (H) represents foot-mounting)								
MR-J2S-60CP	HC-SFS52(B)G1(H) 1/6	MR-J4-60A-RJ	SC-J2SCP J4KT06K	HG-SR52(B)G1(H) 1/6	△ (Note 6)	SC-SAJ3PW2KC1M-S2	SC-HAJ3ENM3C1M	(Note 7)
	HC-SFS52(B)G1(H) 1/11			HG-SR52(B)G1(H) 1/11				
	HC-SFS52(B)G1(H) 1/17			HG-SR52(B)G1(H) 1/17				
	HC-SFS52(B)G1(H) 1/29			HG-SR52(B)G1(H) 1/29				
	HC-SFS52(B)G1(H) 1/35			HG-SR52(B)G1(H) 1/35				
	HC-SFS52(B)G1(H) 1/43			HG-SR52(B)G1(H) 1/43				
	HC-SFS52(B)G1(H) 1/59			HG-SR52(B)G1(H) 1/59				
MR-J2S-100CP	HC-SFS102(B)G1(H) 1/6	MR-J4-100A-RJ	SC-J2SCP J4KT1K	HG-SR102(B)G1(H) 1/6				
	HC-SFS102(B)G1(H) 1/11			HG-SR102(B)G1(H) 1/11				
	HC-SFS102(B)G1(H) 1/17			HG-SR102(B)G1(H) 1/17				
	HC-SFS102(B)G1(H) 1/29			HG-SR102(B)G1(H) 1/29				
	HC-SFS102(B)G1(H) 1/35			HG-SR102(B)G1(H) 1/35				
	HC-SFS102(B)G1(H) 1/43			HG-SR102(B)G1(H) 1/43				
	HC-SFS102(B)G1(H) 1/59			HG-SR102(B)G1(H) 1/59				
MR-J2S-200CP	HC-SFS152(B)G1(H) 1/6	MR-J4-200A-RJ	SC-J2SCP J4KT3K	HG-SR152(B)G1(H) 1/6				
	HC-SFS152(B)G1(H) 1/11			HG-SR152(B)G1(H) 1/11				
	HC-SFS152(B)G1(H) 1/17			HG-SR152(B)G1(H) 1/17				
	HC-SFS152(B)G1(H) 1/29			HG-SR152(B)G1(H) 1/29				
	HC-SFS152(B)G1(H) 1/35			HG-SR152(B)G1(H) 1/35				
	HC-SFS152(B)G1(H) 1/43			HG-SR152(B)G1(H) 1/43				
	HC-SFS152(B)G1(H) 1/59			HG-SR152(B)G1(H) 1/59				
	HC-SFS202(B)G1(H) 1/6			HG-SR202(B)G1(H) 1/6		SC-HAJ3PW1C1M		
	HC-SFS202(B)G1(H) 1/11			HG-SR202(B)G1(H) 1/11				
	HC-SFS202(B)G1(H) 1/17			HG-SR202(B)G1(H) 1/17				
	HC-SFS202(B)G1(H) 1/29			HG-SR202(B)G1(H) 1/29				
	HC-SFS202(B)G1(H) 1/35			HG-SR202(B)G1(H) 1/35				
	HC-SFS202(B)G1(H) 1/43			HG-SR202(B)G1(H) 1/43				
	HC-SFS202(B)G1(H) 1/59			HG-SR202(B)G1(H) 1/59				
MR-J2S-350CP	HC-SFS352(B)G1(H) 1/6	MR-J4-350A-RJ		HG-SR352(B)G1(H) 1/6				
	HC-SFS352(B)G1(H) 1/11			HG-SR352(B)G1(H) 1/11				
	HC-SFS352(B)G1(H) 1/17			HG-SR352(B)G1(H) 1/17				
	HC-SFS352(B)G1(H) 1/29			HG-SR352(B)G1(H) 1/29				
	HC-SFS352(B)G1(H) 1/35			HG-SR352(B)G1(H) 1/35				
	HC-SFS352(B)G1(H) 1/43			HG-SR352(B)G1(H) 1/43				
	HC-SFS352(B)G1(H) 1/59			HG-SR352(B)G1(H) 1/59				
MR-J2S-500CP	HC-SFS502(B)G1(H) 1/11	MR-J4-500A-RJ	SC-J2SCP J4KT5K	HG-SR502(B)G1(H) 1/11				
	HC-SFS502(B)G1(H) 1/17			HG-SR502(B)G1(H) 1/17				
	HC-SFS502(B)G1(H) 1/29			HG-SR502(B)G1(H) 1/29				
	HC-SFS502(B)G1(H) 1/35			HG-SR502(B)G1(H) 1/35				
	HC-SFS502(B)G1(H) 1/43			HG-SR502(B)G1(H) 1/43				
MR-J2S-700CP	HC-SFS702(B)G1(H) 1/11	MR-J4-700A-RJ	SC-J2SCP J4KT7K	HG-SR702(B)G1(H) 1/11		Existing cable can be used.		
	HC-SFS702(B)G1(H) 1/17			HG-SR702(B)G1(H) 1/17				
	HC-SFS702(B)G1(H) 1/29			HG-SR702(B)G1(H) 1/29				
	HC-SFS702(B)G1(H) 1/35			HG-SR702(B)G1(H) 1/35				
	HC-SFS702(B)G1(H) 1/43			HG-SR702(B)G1(H) 1/43				

Refer to Appendix page 2-65 for important points to note.

(8) Existing HC-SFS motor series (G5, G7 reducer)

○: Compatible; △: Limited functions or compatible with certain conditions; ×: Incompatible

(1)		(2)	(3)	(4)		(5)		
Existing model (Note 13)		Primary/secondary/simultaneous replacement models (Note 5, 14)		Secondary replacement/simultaneous replacement models				
						Motor side conversion cable model		
Servo amplifier model	Servo motor model	Servo amplifier model (Note 1, 12)	Renewal kit model	Servo motor model (Note 1)	Compatibility	Power supply conversion cable	Encoder conversion cable	Brake conversion cable
[Medium capacity/medium inertia HC-SFS series with high-precision reducer, flange output type (G5)] ((B) represents models with brake)								
MR-J2S-60CP	HC-SFS52(B)G5 1/5	MR-J4-60A-RJ	SC-J2SCP J4KT06K	HG-SR52(B)G5 1/5	△ (Note 6)	SC-SAJ3PW2KC1M-S2	SC-HAJ3ENM3C1M	(Note 7)
	HC-SFS52(B)G5 1/11			HG-SR52(B)G5 1/11				
	HC-SFS52(B)G5 1/21			HG-SR52(B)G5 1/21				
	HC-SFS52(B)G5 1/33			HG-SR52(B)G5 1/33				
	HC-SFS52(B)G5 1/45			HG-SR52(B)G5 1/45				
MR-J2S-100CP	HC-SFS102(B)G5 1/5	MR-J4-100A-RJ	SC-J2SCP J4KT1K	HG-SR102(B)G5 1/5				
	HC-SFS102(B)G5 1/11			HG-SR102(B)G5 1/11				
	HC-SFS102(B)G5 1/21			HG-SR102(B)G5 1/21				
	HC-SFS102(B)G5 1/33			HG-SR102(B)G5 1/33				
	HC-SFS102(B)G5 1/45			HG-SR102(B)G5 1/45				
MR-J2S-200CP	HC-SFS152(B)G5 1/5	MR-J4-200A-RJ	SC-J2SCP J4KT3K	HG-SR152(B)G5 1/5				
	HC-SFS152(B)G5 1/11			HG-SR152(B)G5 1/11				
	HC-SFS152(B)G5 1/21			HG-SR152(B)G5 1/21				
	HC-SFS152(B)G5 1/33			HG-SR152(B)G5 1/33				
	HC-SFS152(B)G5 1/45			HG-SR152(B)G5 1/45				
	HC-SFS202(B)G5 1/5			HG-SR202(B)G5 1/5		SC-HAJ3PW1C1M		
	HC-SFS202(B)G5 1/11			HG-SR202(B)G5 1/11				
	HC-SFS202(B)G5 1/21			HG-SR202(B)G5 1/21				
	HC-SFS202(B)G5 1/33			HG-SR202(B)G5 1/33				
	HC-SFS202(B)G5 1/45			HG-SR202(B)G5 1/45				
MR-J2S-350CP	HC-SFS352(B)G5 1/5	MR-J4-350A-RJ		HG-SR352(B)G5 1/5				
	HC-SFS352(B)G5 1/11			HG-SR352(B)G5 1/11				
	HC-SFS352(B)G5 1/21			HG-SR352(B)G5 1/21				
MR-J2S-500CP	HC-SFS502(B)G5 1/5	MR-J4-500A-RJ	SC-J2SCP J4KT5K	HG-SR502(B)G5 1/5				
	HC-SFS502(B)G5 1/11			HG-SR502(B)G5 1/11				
MR-J2S-700CP	HC-SFS702(B)G5 1/5	MR-J4-700A-RJ	SC-J2SCP J4KT7K	HG-SR702(B)G5 1/5		Existing cable can be used.		
[Medium capacity/medium inertia HC-SFS series with high-precision reducer, shaft output type (G7)] ((B) represents models with brake)								
MR-J2S-60CP	HC-SFS52(B)G7 1/5	MR-J4-60A-RJ	SC-J2SCP J4KT06K	HG-SR52(B)G7 1/5	△ (Note 6)	SC-SAJ3PW2KC1M-S2	SC-HAJ3ENM3C1M	(Note 7)
	HC-SFS52(B)G7 1/11			HG-SR52(B)G7 1/11				
	HC-SFS52(B)G7 1/21			HG-SR52(B)G7 1/21				
	HC-SFS52(B)G7 1/33			HG-SR52(B)G7 1/33				
	HC-SFS52(B)G7 1/45			HG-SR52(B)G7 1/45				
MR-J2S-100CP	HC-SFS102(B)G7 1/5	MR-J4-100A-RJ	SC-J2SCP J4KT1K	HG-SR102(B)G7 1/5				
	HC-SFS102(B)G7 1/11			HG-SR102(B)G7 1/11				
	HC-SFS102(B)G7 1/21			HG-SR102(B)G7 1/21				
	HC-SFS102(B)G7 1/33			HG-SR102(B)G7 1/33				
	HC-SFS102(B)G7 1/45			HG-SR102(B)G7 1/45				
MR-J2S-200CP	HC-SFS152(B)G7 1/5	MR-J4-200A-RJ	SC-J2SCP J4KT3K	HG-SR152(B)G7 1/5				
	HC-SFS152(B)G7 1/11			HG-SR152(B)G7 1/11				
	HC-SFS152(B)G7 1/21			HG-SR152(B)G7 1/21				
	HC-SFS152(B)G7 1/33			HG-SR152(B)G7 1/33				
	HC-SFS152(B)G7 1/45			HG-SR152(B)G7 1/45				
	HC-SFS202(B)G7 1/5			HG-SR202(B)G7 1/5		SC-HAJ3PW1C1M		
	HC-SFS202(B)G7 1/11			HG-SR202(B)G7 1/11				
	HC-SFS202(B)G7 1/21			HG-SR202(B)G7 1/21				
	HC-SFS202(B)G7 1/33			HG-SR202(B)G7 1/33				
	HC-SFS202(B)G7 1/45			HG-SR202(B)G7 1/45				
MR-J2S-350CP	HC-SFS352(B)G7 1/5	MR-J4-350A-RJ		HG-SR352(B)G7 1/5				
	HC-SFS352(B)G7 1/11			HG-SR352(B)G7 1/11				
	HC-SFS352(B)G7 1/21			HG-SR352(B)G7 1/21				
MR-J2S-500CP	HC-SFS502(B)G7 1/5	MR-J4-500A-RJ	SC-J2SCP J4KT5K	HG-SR502(B)G7 1/5				
	HC-SFS502(B)G7 1/11			HG-SR502(B)G7 1/11				
MR-J2S-700CP	HC-SFS702(B)G7 1/5	MR-J4-700A-RJ	SC-J2SCP J4KT7K	HG-SR702(B)G7 1/5		Existing cable can be used.		

Refer to Appendix page 2-65 for important points to note.

(9) Existing HC-RFS motor series (standard/with brake, G2 reducer)

○: Compatible; △: Limited functions or compatible with certain conditions; ×: Incompatible

(1)		(2)	(3)	(4)	(5)		(6)	(7)		
Existing model (Note 13)		Primary replacement model (Note 5)		Secondary replacement/simultaneous replacement models						
Servo amplifier model	Servo motor model	Servo amplifier model (Note 1, 12)	Renewal kit model	Servo amplifier model (Note 1)	Servo motor model (Note 1)	Compatibility	Renewal kit model	Motor side conversion cable: Power supply conversion cable	Motor side conversion cable: Encoder conversion cable	Motor side conversion cable: Brake conversion cable
[Medium capacity/ultra-low inertia HC-RFS series, standard/with brake] ((B) represents models with brake)										
MR-J2S-200CP	HC-RFS103(B)	MR-J4-200A-RJ	SC-J2SCPJ4KT3K	MR-J4-200A-RJ	HG-RR103(B)	○	SC-J2SCPJ4KT3K	Existing cable can be used.	SC-HAJ3ENM3C1M	Existing cable can be used.
	HC-RFS153(B)				HG-RR153(B)					
MR-J2S-350CP	HC-RFS203(B)	MR-J4-350A-RJ		MR-J4-350A-RJ	HG-RR203(B)					
MR-J2S-500CP	HC-RFS353(B)	MR-J4-500A-RJ	SC-J2SCPJ4KT5K	MR-J4-500A-RJ	HG-RR353(B)		SC-J2SCPJ4KT5K			
	HC-RFS503(B)				HG-RR503(B)					
[Medium capacity/ultra-low inertia HC-RFS series with high-precision reducer (G2)] ((B) represents models with brake)										
MR-J2S-200CP	HC-RFS103(B)G2 1/5	MR-J4-200A-RJ (Note 10)	SC-J2SCPJ4KT3K	MR-J4-100A-RJ (Note 10)	HG-SR102(B)G7 1/5	× (Note 3) (Note 4)	(Note 11)	SC-SAJ3PW2KC1M-S2	SC-HAJ3ENM3C1M	(Note 7)
	HC-RFS103(B)G2 1/9				HG-SR102(B)G7 1/11					
	HC-RFS103(B)G2 1/20				HG-SR102(B)G7 1/21					
	HC-RFS103(B)G2 1/29				HG-SR102(B)G7 1/33					
	HC-RFS103(B)G2 1/45				HG-SR102(B)G7 1/45					
	HC-RFS153(B)G2 1/5	MR-J4-200A-RJ		MR-J4-200A-RJ	HG-SR152(B)G7 1/5		SC-J2SCPJ4KT3K			
	HC-RFS153(B)G2 1/9				HG-SR152(B)G7 1/11					
	HC-RFS153(B)G2 1/20				HG-SR152(B)G7 1/21					
	HC-RFS153(B)G2 1/29				HG-SR152(B)G7 1/33					
	HC-RFS153(B)G2 1/45				HG-SR152(B)G7 1/45					
MR-J2S-350CP	HC-RFS203(B)G2 1/5	MR-J4-350A-RJ (Note 10)		MR-J4-200A-RJ (Note 10)	HG-SR202(B)G7 1/5			SC-J2SJ4PW2C1M		
	HC-RFS203(B)G2 1/9				HG-SR202(B)G7 1/11					
	HC-RFS203(B)G2 1/20				HG-SR202(B)G7 1/21					
	HC-RFS203(B)G2 1/29				HG-SR202(B)G7 1/33					
	HC-RFS203(B)G2 1/45				HG-SR202(B)G7 1/45					
MR-J2S-500CP	HC-RFS353(B)G2 1/5	MR-J4-500A–RJ (Note 10)	SC-J2SCPJ4KT5K	MR-J4-350A-RJ (Note 10)	HG-SR352(B)G7 1/5		(Note 11)	SC-HAJ3PW1C1M		
	HC-RFS353(B)G2 1/9				HG-SR352(B)G7 1/11					
	HC-RFS353(B)G2 1/20				HG-SR352(B)G7 1/21					
	HC-RFS353(B)G2 1/29									
	HC-RFS503(B)G2 1/5	MR-J4-500A-RJ		MR-J4-500A-RJ	HG-SR502(B)G7 1/5		SC-J2SCPJ4KT5K			
	HC-RFS503(B)G2 1/9				HG-SR502(B)G7 1/11					
	HC-RFS503(B)G2 1/20									

Refer to Appendix page 2-65 for important points to note.

(10) Existing HC-RFS motor series (G5, G7 reducer)

○: Compatible; △: Limited functions or compatible with certain conditions; ×: Incompatible

(1)		(2)	(3)	(4)	(5)		(6)	(7)		
Existing model (Note 13)		Primary replacement model (Note 5)		Secondary replacement/simultaneous replacement models						
Servo amplifier model	Servo motor model	Servo amplifier model (Note 1, 12)	Renewal kit model	Servo amplifier model (Note 1)	Servo motor model (Note 1)	Compatibility	Renewal kit model	Motor side conversion cable: Power supply conversion cable	Motor side conversion cable: Encoder conversion cable	Motor side conversion cable: Brake conversion cable
[Medium capacity/ultra-low inertia HC-RFS series with high-precision reducer, flange output type (G5)] ((B) represents models with brake)										
MR-J2S-200CP	HC-RFS103(B)G5 1/5	MR-J4-200A-RJ (Note 10)	SC-J2SCP J4KT3K	MR-J4-100A-RJ (Note 10)	HG-SR102(B)G5 1/5	× (Note 3) (Note 4)	(Note 11)	SC-SAJ3PW2KC1M-S2	SC-HAJ3ENM3C1M	(Note 7)
	HC-RFS103(B)G5 1/11				HG-SR102(B)G5 1/11					
	HC-RFS103(B)G5 1/21				HG-SR102(B)G5 1/21					
	HC-RFS103(B)G5 1/33				HG-SR102(B)G5 1/33					
	HC-RFS103(B)G5 1/45				HG-SR102(B)G5 1/45					
	HC-RFS153(B)G5 1/5	MR-J4-200A-RJ		MR-J4-200A-RJ	HG-SR152(B)G5 1/5		SC-J2SCPJ4KT3K			
	HC-RFS153(B)G5 1/11				HG-SR152(B)G5 1/11					
	HC-RFS153(B)G5 1/21				HG-SR152(B)G5 1/21					
	HC-RFS153(B)G5 1/33				HG-SR152(B)G5 1/33					
	HC-RFS153(B)G5 1/45				HG-SR152(B)G5 1/45					
MR-J2S-350CP	HC-RFS203(B)G5 1/5	MR-J4-350A-RJ (Note 10)		MR-J4-200A-RJ (Note 10)	HG-SR202(B)G5 1/5			SC-J2SJ4PW2C1M		
	HC-RFS203(B)G5 1/11				HG-SR202(B)G5 1/11					
	HC-RFS203(B)G5 1/21				HG-SR202(B)G5 1/21					
	HC-RFS203(B)G5 1/33				HG-SR202(B)G5 1/33					
	HC-RFS203(B)G5 1/45				HG-SR202(B)G5 1/45					
MR-J2S-500CP	HC-RFS353(B)G5 1/5	MR-J4-500A-RJ (Note 10)	SC-J2SCP J4KT5K	MR-J4-350A-RJ (Note 10)	HG-SR352(B)G5 1/5		(Note 11)	SC-HAJ3PW1C1M		
	HC-RFS353(B)G5 1/11				HG-SR352(B)G5 1/11					
	HC-RFS353(B)G5 1/21				HG-SR352(B)G5 1/21					
	HC-RFS353(B)G5 1/33									
	HC-RFS503(B)G5 1/5	MR-J4-500A-RJ		MR-J4-500A-RJ	HG-SR502(B)G5 1/5		SC-J2SCPJ4KT5K			
	HC-RFS503(B)G5 1/11				HG-SR502(B)G5 1/11					
	HC-RFS503(B)G5 1/21									
[Medium capacity/ultra-low inertia HC-RFS series with high-precision reducer, flange output type (G7)] ((B) represents models with brake)										
MR-J2S-200CP	HC-RFS103(B)G7 1/5	MR-J4-200A-RJ (Note 10)	SC-J2SCP J4KT3K	MR-J4-100A-RJ (Note 10)	HG-SR102(B)G7 1/5	× (Note 3) (Note 4)	(Note 11)	SC-SAJ3PW2KC1M-S2	SC-HAJ3ENM3C1M	(Note 7)
	HC-RFS103(B)G7 1/11				HG-SR102(B)G7 1/11					
	HC-RFS103(B)G7 1/21				HG-SR102(B)G7 1/21					
	HC-RFS103(B)G7 1/33				HG-SR102(B)G7 1/33					
	HC-RFS103(B)G7 1/45				HG-SR102(B)G7 1/45					
	HC-RFS153(B)G7 1/5	MR-J4-200A-RJ		MR-J4-200A-RJ	HG-SR152(B)G7 1/5		SC-J2SCPJ4KT3K			
	HC-RFS153(B)G7 1/11				HG-SR152(B)G7 1/11					
	HC-RFS153(B)G7 1/21				HG-SR152(B)G7 1/21					
	HC-RFS153(B)G7 1/33				HG-SR152(B)G7 1/33					
	HC-RFS153(B)G7 1/45				HG-SR152(B)G7 1/45					
MR-J2S-350CP	HC-RFS203(B)G7 1/5	MR-J4-350A-RJ (Note 10)		MR-J4-200A-RJ (Note 10)	HG-SR202(B)G7 1/5			SC-J2SJ4PW2C1M		
	HC-RFS203(B)G7 1/11				HG-SR202(B)G7 1/11					
	HC-RFS203(B)G7 1/21				HG-SR202(B)G7 1/21					
	HC-RFS203(B)G7 1/33				HG-SR202(B)G7 1/33					
	HC-RFS203(B)G7 1/45				HG-SR202(B)G7 1/45					
MR-J2S-500CP	HC-RFS353(B)G7 1/5	MR-J4-500A-RJ (Note 10)	SC-J2SCP J4KT5K	MR-J4-350A-RJ (Note 10)	HG-SR352(B)G7 1/5		(Note 11)	SC-HAJ3PW1C1M		
	HC-RFS353(B)G7 1/11				HG-SR352(B)G7 1/11					
	HC-RFS353(B)G7 1/21				HG-SR352(B)G7 1/21					
	HC-RFS353(B)G7 1/33									
	HC-RFS503(B)G7 1/5	MR-J4-500A-RJ		MR-J4-500A-RJ	HG-SR502(B)G7 1/5		SC-J2SCPJ4KT5K			
	HC-RFS503(B)G7 1/11				HG-SR502(B)G7 1/11					
	HC-RFS503(B)G7 1/21									

Refer to Appendix page 2-65 for important points to note.

(11) Existing HC-UFS motor series

○: Compatible; △: Limited functions or compatible with certain conditions; ×: Incompatible

(1)		(2)	(3)	(4)		(5)		
Existing model (Note 13)		Primary/secondary/simultaneous replacement models (Note 5, 14)		Secondary replacement/simultaneous replacement models				
Servo amplifier model	Servo motor model	Servo amplifier model (Note 1, 12)	Renewal kit model	Servo motor model (Note 1)	Compatibility	Motor side conversion cable model: Power supply conversion cable	Encoder conversion cable	Brake conversion cable
[Medium capacity/flat type HC-UFS series, standard/with brake] ((B) represents models with brake)								
MR-J2S-70CP	HC-UFS72(B)	MR-J4-70A-RJ	SC-J2SCP J4KT1K	HG-UR72(B)	○	Existing cable can be used.	SC-HAJ3ENM3C1M	Existing cable can be used.
MR-J2S-200CP	HC-UFS152(B)	MR-J4-200A-RJ	SC-J2SCP J4KT3K	HG-UR152(B)				
MR-J2S-350CP	HC-UFS202(B)	MR-J4-350A-RJ		HG-UR202(B)				
MR-J2S-500CP	HC-UFS352(B)	MR-J4-500A-RJ	SC-J2SCP J4KT5K	HG-UR352(B)				
	HC-UFS502(B)			HG-UR502(B)				
Small capacity/flat type HC-UFS series, standard/with brake] ((B) represents models with brake)								
MR-J2S-10CP(1)	HC-UFS13(B)	MR-J4-10A(1)-RJ	SC-J2SCP J4KT02K	HG-KR13(B)	× (Note 3)	Without brake: SC-J2SJ4PW1C03M-■ With brake: SC-J2SJ4PWBK1C03M-■	SC-HAJ3ENM1C03M-■	Built in to power supply conversion cable.
MR-J2S-20CP(1)	HC-UFS23(B)	MR-J4-20A(1)-RJ		HG-KR23(B)				
MR-J2S-40CP(1)	HC-UFS43(B)	MR-J4-40A(1)-RJ	SC-J2SCP J4KT06K	HG-KR43(B)				
MR-J2S-70CP	HC-UFS73(B)	MR-J4-70A-RJ	SC-J2SCP J4KT1K	HG-KR73(B)				

Refer to Appendix page 2-65 for important points to note.

(12) Existing HC-LFS motor series

○: Compatible; △: Limited functions or compatible with certain conditions; ×: Incompatible

(1)		(2)	(3)	(4)	(5)		(6)	(7)		
Existing model (Note 13)		Primary replacement model (Note 5)		Secondary replacement/simultaneous replacement models						
Servo amplifier model	Servo motor model	Servo amplifier model (Note 1, 12)	Renewal kit model	Servo amplifier model (Note 1)	Servo motor model (Note 1)	Compatibility	Motor side conversion cable model: Renewal kit model	Power supply conversion cable	Encoder conversion cable	Brake conversion cable
[Medium capacity/low inertia HC-LFS series, standard/with brake] ((B) represents models with brake)										
MR-J2S-60CP	HC-LFS52(B)	MR-J4-60A-RJ (Note 10)	SC-J2SCP J4KT06K	MR-J4-70A-RJ (Note 10)	HG-JR73(B)	× (Note 3)	(Note 11)	SC-SAJ3PW2KC1M-S2	SC-HAJ3ENM3C1M	(Note 7)
MR-J2S-100CP	HC-LFS102(B)	MR-J4-100A-RJ (Note 10)	SC-J2SCP J4KT1K	MR-J4-200A-RJ (Note 10)	HG-JR153(B)					
MR-J2S-200CP	HC-LFS152(B)	MR-J4-200A-RJ (Note 10)	SC-J2SCP J4KT3K	MR-J4-350A-RJ (Note 10)	HG-JR353(B)		SC-J2SCPJ4KT3K	SC-J2SJ4PW2C1M		
MR-J2S-350CP	HC-LFS202(B)	MR-J4-350A-RJ		MR-J4-350A-RJ				SC-HAJ3PW1C1M		
MR-J2S-500CP	HC-LFS302(B)	MR-J4-500A-RJ	SC-J2SCP J4KT5K	MR-J4-500A-RJ	HG-JR503(B)		SC-J2SCPJ4KT5K			

Refer to Appendix page 2-65 for important points to note.

(13) Existing HA-LFS motor series

○: Compatible; △: Limited functions or compatible with certain conditions; ×: Incompatible

(1)		(2)	(3)	(4)	(5)		(6)	(7)		
Existing model (Note 13)		Primary replacement model (Note 5)		Secondary replacement/simultaneous replacement models						
								Motor side conversion cable model		
Servo amplifier model	Servo motor model	Servo amplifier model (Note 1, 12)	Renewal kit model	Servo amplifier model (Note 1)	Servo motor model (Note 1)	Compatibility	Renewal kit model	Power supply conversion Cable	Encoder Conversion cable	Brake/Conversion cable for the cooling fan
[Medium/large capacity/low inertia HA-LFS 1000 r/min series, standard/with brake] ((B) represents models with brake)										
MR-J2S-700CP	HA-LFS601(B)	(Note 16)		MR-J4-700A-RJ	HG-JR601(B) (Note 4)	× (Note 3)	SC-J2SCP J4KT7K	SC-J2SJ4PW3C1M-■	Existing cable can be used.	• Existing brake cable can be used. • Cooling fan cable (Note 9)
[Medium/large capacity/low inertia HA-LFS 1500 r/min series, standard/with brake] ((B) represents models with brake)										
MR-J2S-700CP	HA-LFS701M(B)	(Note 16)		MR-J4-700A-RJ	HG-JR701M(B) (Note 4)	× (Note 3)	SC-J2SCP J4KT7K	SC-J2SJ4PW3C1M-■	Existing cable can be used.	• Existing brake cable can be used. • Cooling fan cable (Note 9)
[Medium/large capacity/low inertia HA-LFS 2000 r/min series, standard/with brake] ((B) represents models with brake)										
MR-J2S-500CP	HA-LFS502	MR-J4-500A-RJ	SC-J2SCP J4KT5K	MR-J4-500A-RJ	HG-SR502	× (Note 3)	SC-J2SCP J4KT5K	SC-HAJ3PW1C1M	SC-HAJ3ENM3C1M	
MR-J2S-700CP	HA-LFS702	MR-J4-700A-RJ	SC-J2SCP J4KT7K	MR-J4-700A-RJ	HG-SR702		SC-J2SCP J4KT7K	Existing cable can be used.		

Refer to Appendix page 2-65 for important points to note.

4.4 General-Purpose Interface Replacement Combination List (400 V Class)

(1) Existing HC-SFS motor series (standard/with brake, G2 reducer)

○: Compatible; △: Limited functions or compatible with certain conditions; ×: Incompatible

(1)		(2)	(3)	(4)		(5)		
Existing model (Note 13)		Primary/secondary/simultaneous replacement models (Note 5, 14)		Secondary replacement/simultaneous replacement models				
						Motor side conversion cable model		
Servo amplifier model	Servo motor model	Servo amplifier model (Note 1, 12)	Renewal kit model	Servo motor model (Note 1)	Compatibility	Power supply conversion cable	Encoder conversion cable	Brake conversion cable
[Medium capacity/medium inertia HC-SFS series, standard/with brake] ((B) represents models with brake)								
MR-J2S-60A4	HC-SFS524(B)	MR-J4-60A4	SC-J2SJ4BS02 (Note 18)	HG-SR524(B)	△ (Note 6)	SC-SAJ3PW2KC1M-S2	SC-HAJ3ENM3C1M	(Note 7)
MR-J2S-100A4	HC-SFS1024(B)	MR-J4-100A4		HG-SR1024(B)				
MR-J2S-200A4	HC-SFS1524(B)	MR-J4-200A4	SC-J2SJ4BS03 (Note 18)	HG-SR1524(B)				
	HC-SFS2024(B)			HG-SR2024(B)		SC-HAJ3PW1C1M		
MR-J2S-350A4	HC-SFS3524(B)	MR-J4-350A4	SC-J2SJ4BS04 (Note 18)	HG-SR3524(B)				
MR-J2S-500A4	HC-SFS5024(B)	MR-J4-500A4	(Note 19)	HG-SR5024(B)				
MR-J2S-700A4	HC-SFS7024(B)	MR-J4-700A4	SC-J2SJ4BS05 (Note 18)	HG-SR7024(B)		Existing cable can be used.		
[Medium capacity/medium inertia HC-SFS series with high-precision reducer (G2)] ((B) represents models with brake)								
MR-J2S-60A4	HC-SFS524(B)G2 1/5	MR-J4-60A4	SC-J2SJ4BS02 (Note 18)	HG-SR524(B)G7 1/5	× (Note 3) (Note 6)	SC-SAJ3PW2KC1M-S2	SC-HAJ3ENM3C1M	(Note 7)
	HC-SFS524(B)G2 1/9			HG-SR524(B)G7 1/11				
	HC-SFS524(B)G2 1/20			HG-SR524(B)G7 1/21				
	HC-SFS524(B)G2 1/29			HG-SR524(B)G7 1/33				
	HC-SFS524(B)G2 1/45			HG-SR524(B)G7 1/45				
MR-J2S-100A4	HC-SFS1024(B)G2 1/5	MR-J4-100A4		HG-SR1024(B)G7 1/5				
	HC-SFS1024(B)G2 1/9			HG-SR1024(B)G7 1/11				
	HC-SFS1024(B)G2 1/20			HG-SR1024(B)G7 1/21				
	HC-SFS1024(B)G2 1/29			HG-SR1024(B)G7 1/33				
	HC-SFS1024(B)G2 1/45			HG-SR1024(B)G7 1/45				
MR-J2S-200A4	HC-SFS1524(B)G2 1/5	MR-J4-200A4	SC-J2SJ4BS03 (Note 18)	HG-SR1524(B)G7 1/5				
	HC-SFS1524(B)G2 1/9			HG-SR1524(B)G7 1/11				
	HC-SFS1524(B)G2 1/20			HG-SR1524(B)G7 1/21				
	HC-SFS1524(B)G2 1/29			HG-SR1524(B)G7 1/33				
	HC-SFS1524(B)G2 1/45			HG-SR1524(B)G7 1/45				
	HC-SFS2024(B)G2 1/5			HG-SR2024(B)G7 1/5				
	HC-SFS2024(B)G2 1/9			HG-SR2024(B)G7 1/11				
	HC-SFS2024(B)G2 1/20			HG-SR2024(B)G7 1/21				
	HC-SFS2024(B)G2 1/29			HG-SR2024(B)G7 1/33				
	HC-SFS2024(B)G2 1/45			HG-SR2024(B)G7 1/45		SC-HAJ3PW1C1M		
MR-J2S-350A4	HC-SFS3524(B)G2 1/5	MR-J4-350A4	SC-J2SJ4BS04 (Note 18)	HG-SR3524(B)G7 1/5				
	HC-SFS3524(B)G2 1/9			HG-SR3524(B)G7 1/11				
	HC-SFS3524(B)G2 1/20			HG-SR3524(B)G7 1/21				
MR-J2S-500A4	HC-SFS5024(B)G2 1/5	MR-J4-500A4	(Note 19)	HG-SR5024(B)G7 1/5				
	HC-SFS5024(B)G2 1/9			HG-SR5024(B)G7 1/11				
MR-J2S-700A4	HC-SFS7024(B)G2 1/5	MR-J4-700A4	SC-J2SJ4BS05 (Note 18)	HG-SR7024(B)G7 1/5		Existing cable can be used.		

Refer to Appendix page 2-65 for important points to note.

(2) Existing HC-SFS motor series (G1 reducer)

○: Compatible; △: Limited functions or compatible with certain conditions; ×: Incompatible

(1)		(2)	(3)	(4)		(5)		
Existing model (Note 13)		Primary/secondary/simultaneous replacement models (Note 5, 14)		Secondary replacement/simultaneous replacement models				
						Motor side conversion cable model		
Servo amplifier model	Servo motor model	Servo amplifier model (Note 1, 12)	Renewal kit model	Servo motor model (Note 1)	Compatibility	Power supply conversion cable	Encoder conversion cable	Brake conversion cable
[Medium capacity/medium inertia HC-SFS series with general reducer (G1)] ((B) represents models with brake, (H) represents foot-mounting)								
MR-J2S-60A4	HC-SFS524(B)G1(H) 1/6	MR-J4-60A4	SC-J2SJ4BS02 (Note 18)	HG-SR524(B)G1(H) 1/6	△ (Note 6)	SC-SAJ3PW2KC1M-S2	SC-HAJ3ENM3C1M	(Note 7)
	HC-SFS524(B)G1(H) 1/11			HG-SR524(B)G1(H) 1/11				
	HC-SFS524(B)G1(H) 1/17			HG-SR524(B)G1(H) 1/17				
	HC-SFS524(B)G1(H) 1/29			HG-SR524(B)G1(H) 1/29				
	HC-SFS524(B)G1(H) 1/35			HG-SR524(B)G1(H) 1/35				
	HC-SFS524(B)G1(H) 1/43			HG-SR524(B)G1(H) 1/43				
	HC-SFS524(B)G1(H) 1/59			HG-SR524(B)G1(H) 1/59				
MR-J2S-100A4	HC-SFS1024(B)G1(H) 1/6	MR-J4-100A4		HG-SR1024(B)G1(H) 1/6				
	HC-SFS1024(B)G1(H) 1/11			HG-SR1024(B)G1(H) 1/11				
	HC-SFS1024(B)G1(H) 1/17			HG-SR1024(B)G1(H) 1/17				
	HC-SFS1024(B)G1(H) 1/29			HG-SR1024(B)G1(H) 1/29				
	HC-SFS1024(B)G1(H) 1/35			HG-SR1024(B)G1(H) 1/35				
	HC-SFS1024(B)G1(H) 1/43			HG-SR1024(B)G1(H) 1/43				
	HC-SFS1024(B)G1(H) 1/59			HG-SR1024(B)G1(H) 1/59				
MR-J2S-200A4	HC-SFS1524(B)G1(H) 1/6	MR-J4-200A4	SC-J2SJ4BS03 (Note 18)	HG-SR1524(B)G1(H) 1/6				
	HC-SFS1524(B)G1(H) 1/11			HG-SR1524(B)G1(H) 1/11				
	HC-SFS1524(B)G1(H) 1/17			HG-SR1524(B)G1(H) 1/17				
	HC-SFS1524(B)G1(H) 1/29			HG-SR1524(B)G1(H) 1/29				
	HC-SFS1524(B)G1(H) 1/35			HG-SR1524(B)G1(H) 1/35				
	HC-SFS1524(B)G1(H) 1/43			HG-SR1524(B)G1(H) 1/43				
	HC-SFS1524(B)G1(H) 1/59			HG-SR1524(B)G1(H) 1/59				
	HC-SFS2024(B)G1(H) 1/6			HG-SR2024(B)G1(H) 1/6		SC-HAJ3PW1C1M		
	HC-SFS2024(B)G1(H) 1/11			HG-SR2024(B)G1(H) 1/11				
	HC-SFS2024(B)G1(H) 1/17			HG-SR2024(B)G1(H) 1/17				
	HC-SFS2024(B)G1(H) 1/29			HG-SR2024(B)G1(H) 1/29				
	HC-SFS2024(B)G1(H) 1/35			HG-SR2024(B)G1(H) 1/35				
	HC-SFS2024(B)G1(H) 1/43			HG-SR2024(B)G1(H) 1/43				
	HC-SFS2024(B)G1(H) 1/59			HG-SR2024(B)G1(H) 1/59				
MR-J2S-350A4	HC-SFS3524(B)G1(H) 1/6	MR-J4-350A4	SC-J2SJ4BS04 (Note 18)	HG-SR3524(B)G1(H) 1/6				
	HC-SFS3524(B)G1(H) 1/11			HG-SR3524(B)G1(H) 1/11				
	HC-SFS3524(B)G1(H) 1/17			HG-SR3524(B)G1(H) 1/17				
	HC-SFS3524(B)G1(H) 1/29			HG-SR3524(B)G1(H) 1/29				
	HC-SFS3524(B)G1(H) 1/35			HG-SR3524(B)G1(H) 1/35				
	HC-SFS3524(B)G1(H) 1/43			HG-SR3524(B)G1(H) 1/43				
	HC-SFS3524(B)G1(H) 1/59			HG-SR3524(B)G1(H) 1/59				
MR-J2S-500A4	HC-SFS5024(B)G1(H) 1/11	MR-J4-500A4	(Note 19)	HG-SR5024(B)G1(H) 1/11				
	HC-SFS5024(B)G1(H) 1/17			HG-SR5024(B)G1(H) 1/17				
	HC-SFS5024(B)G1(H) 1/29			HG-SR5024(B)G1(H) 1/29				
	HC-SFS5024(B)G1(H) 1/35			HG-SR5024(B)G1(H) 1/35				
	HC-SFS5024(B)G1(H) 1/43			HG-SR5024(B)G1(H) 1/43				
MR-J2S-700A4	HC-SFS7024(B)G1(H) 1/11	MR-J4-700A4	SC-J2SJ4BS05 (Note 18)	HG-SR7024(B)G1(H) 1/11		Existing cable can be used.		
	HC-SFS7024(B)G1(H) 1/17			HG-SR7024(B)G1(H) 1/17				
	HC-SFS7024(B)G1(H) 1/29			HG-SR7024(B)G1(H) 1/29				
	HC-SFS7024(B)G1(H) 1/35			HG-SR7024(B)G1(H) 1/35				
	HC-SFS7024(B)G1(H) 1/43			HG-SR7024(B)G1(H) 1/43				

Refer to Appendix page 2-65 for important points to note.

(3) Existing HC-SFS motor series (G5, G7 reducer)

○: Compatible; △: Limited functions or compatible with certain conditions; ×: Incompatible

(1)		(2)	(3)	(4)		(5)		
Existing model (Note 13)		Primary/secondary/simultaneous replacement models (Note 5, 14)		Secondary replacement/simultaneous replacement models				
Servo amplifier model	Servo motor model	Servo amplifier model (Note 1, 12)	Renewal kit model	Servo motor model (Note 1)	Compatibility	Motor side conversion cable model: Power supply conversion cable	Motor side conversion cable model: Encoder conversion cable	Motor side conversion cable model: Brake conversion cable
[Medium capacity/medium inertia HC-SFS series with high-precision reducer, flange output type (G5)] ((B) represents models with brake)								
MR-J2S-60A4	HC-SFS524(B)G5 1/5	MR-J4-60A4	SC-J2SJ4BS02 (Note 18)	HG-SR524(B)G5 1/5	△ (Note 6)	SC-SAJ3PW2KC1M-S2	SC-HAJ3ENM3C1M	(Note 7)
	HC-SFS524(B)G5 1/11			HG-SR524(B)G5 1/11				
	HC-SFS524(B)G5 1/21			HG-SR524(B)G5 1/21				
	HC-SFS524(B)G5 1/33			HG-SR524(B)G5 1/33				
	HC-SFS524(B)G5 1/45			HG-SR524(B)G5 1/45				
MR-J2S-100A4	HC-SFS1024(B)G5 1/5	MR-J4-100A4		HG-SR1024(B)G5 1/5				
	HC-SFS1024(B)G5 1/11			HG-SR1024(B)G5 1/11				
	HC-SFS1024(B)G5 1/21			HG-SR1024(B)G5 1/21				
	HC-SFS1024(B)G5 1/33			HG-SR1024(B)G5 1/33				
	HC-SFS1024(B)G5 1/45			HG-SR1024(B)G5 1/45				
MR-J2S-200A4	HC-SFS1524(B)G5 1/5	MR-J4-200A4	SC-J2SJ4BS03 (Note 18)	HG-SR1524(B)G5 1/5				
	HC-SFS1524(B)G5 1/11			HG-SR1524(B)G5 1/11				
	HC-SFS1524(B)G5 1/21			HG-SR1524(B)G5 1/21				
	HC-SFS1524(B)G5 1/33			HG-SR1524(B)G5 1/33				
	HC-SFS1524(B)G5 1/45			HG-SR1524(B)G5 1/45				
	HC-SFS2024(B)G5 1/5			HG-SR2024(B)G5 1/5		SC-HAJ3PW1C1M		
	HC-SFS2024(B)G5 1/11			HG-SR2024(B)G5 1/11				
	HC-SFS2024(B)G5 1/21			HG-SR2024(B)G5 1/21				
	HC-SFS2024(B)G5 1/33			HG-SR2024(B)G5 1/33				
	HC-SFS2024(B)G5 1/45			HG-SR2024(B)G5 1/45				
MR-J2S-350A4	HC-SFS3524(B)G5 1/5	MR-J4-350A4	SC-J2SJ4BS04 (Note 18)	HG-SR3524(B)G5 1/5				
	HC-SFS3524(B)G5 1/11			HG-SR3524(B)G5 1/11				
	HC-SFS3524(B)G5 1/21			HG-SR3524(B)G5 1/21				
MR-J2S-500A4	HC-SFS5024(B)G5 1/5	MR-J4-500A4	(Note 19)	HG-SR5024(B)G5 1/5				
	HC-SFS5024(B)G5 1/11			HG-SR5024(B)G5 1/11				
MR-J2S-700A4	HC-SFS7024(B)G5 1/5	MR-J4-700A4	SC-J2SJ4BS05 (Note 18)	HG-SR7024(B)G5 1/5		Existing cable can be used.		
[Medium capacity/medium inertia HC-SFS series with high-precision reducer, shaft output type (G7)] ((B) represents models with brake)								
MR-J2S-60A4	HC-SFS524(B)G7 1/5	MR-J4-60A4	SC-J2SJ4BS02 (Note 18)	HG-SR524(B)G7 1/5	△ (Note 6)	SC-SAJ3PW2KC1M-S2	SC-HAJ3ENM3C1M	(Note 7)
	HC-SFS524(B)G7 1/11			HG-SR524(B)G7 1/11				
	HC-SFS524(B)G7 1/21			HG-SR524(B)G7 1/21				
	HC-SFS524(B)G7 1/33			HG-SR524(B)G7 1/33				
	HC-SFS524(B)G7 1/45			HG-SR524(B)G7 1/45				
MR-J2S-100A4	HC-SFS1024(B)G7 1/5	MR-J4-100A4		HG-SR1024(B)G7 1/5				
	HC-SFS1024(B)G7 1/11			HG-SR1024(B)G7 1/11				
	HC-SFS1024(B)G7 1/21			HG-SR1024(B)G7 1/21				
	HC-SFS1024(B)G7 1/33			HG-SR1024(B)G7 1/33				
	HC-SFS1024(B)G7 1/45			HG-SR1024(B)G7 1/45				
MR-J2S-200A4	HC-SFS1524(B)G7 1/5	MR-J4-200A4	SC-J2SJ4BS03 (Note 18)	HG-SR1524(B)G7 1/5				
	HC-SFS1524(B)G7 1/11			HG-SR1524(B)G7 1/11				
	HC-SFS1524(B)G7 1/21			HG-SR1524(B)G7 1/21				
	HC-SFS1524(B)G7 1/33			HG-SR1524(B)G7 1/33				
	HC-SFS1524(B)G7 1/45			HG-SR1524(B)G7 1/45				
	HC-SFS2024(B)G7 1/5			HG-SR2024(B)G7 1/5		SC-HAJ3PW1C1M		
	HC-SFS2024(B)G7 1/11			HG-SR2024(B)G7 1/11				
	HC-SFS2024(B)G7 1/21			HG-SR2024(B)G7 1/21				
	HC-SFS2024(B)G7 1/33			HG-SR2024(B)G7 1/33				
	HC-SFS2024(B)G7 1/45			HG-SR2024(B)G7 1/45				
MR-J2S-350A4	HC-SFS3524(B)G7 1/5	MR-J4-350A4	SC-J2SJ4BS04 (Note 18)	HG-SR3524(B)G7 1/5				
	HC-SFS3524(B)G7 1/11			HG-SR3524(B)G7 1/11				
	HC-SFS3524(B)G7 1/21			HG-SR3524(B)G7 1/21				
MR-J2S-500A4	HC-SFS5024(B)G7 1/5	MR-J4-500A4	(Note 19)	HG-SR5024(B)G7 1/5				
	HC-SFS5024(B)G7 1/11			HG-SR5024(B)G7 1/11				
MR-J2S-700A4	HC-SFS7024(B)G7 1/5	MR-J4-700A4	SC-J2SJ4BS05 (Note 18)	HG-SR7024(B)G7 1/5		Existing cable can be used.		

Refer to Appendix page 2-65 for important points to note.

(4) Existing HA-LFS motor series

○: Compatible; △: Limited functions or compatible with certain conditions; ×: Incompatible

(1)		(2)	(3)	(4)	(5)		(6)	(7)		
Existing model (Note 13)		Primary replacement model (Note 5)		Secondary replacement/simultaneous replacement models						
								Motor side conversion cable model		
Servo amplifier model	Servo motor model	Servo amplifier model (Note 1, 12)	Renewal kit model	Servo amplifier model (Note 1)	Servo motor model (Note 1)	Compatibility	Renewal kit model	Power supply conversion Cable	Encoder Conversion cable	Brake/Conversion cable for the cooling fan
[Medium/large capacity/low inertia HA-LFS 1000 r/min series, standard/with brake] ((B) represents models with brake)										
MR-J2S-700A4	HA-LFS6014(B)	(Note 16)		MR-J4-700A4	HG-JR6014(B) (Note 4)	× (Note 3)	SC-J2SJ4BS05 (Note 18)	SC-J2SJ4PW3C1M-■	Existing cable can be used.	• Existing brake cable can be used. • Cooling fan cable (Note 9)
MR-J2S-11KA4	HA-LFS8014(B)			MR-J4-11KA4	HG-JR8014(B) (Note 4)		SC-J2SJ4BS06 (Note 18)			
	HA-LFS12K14(B)				HG-JR12K14(B) (Note 4)					
MR-J2S-15KA4	HA-LFS15K14			MR-J4-15KA4	HG-JR15K14			(Note 8)	(Note 17)	• Cooling fan conversion cable SC-J2SJ4FAN1C1M
MR-J2S-22KA4	HA-LFS20K14			MR-J4-22KA4	HG-JR20K14		SC-J2SJ4BS07 (Note 18)			
MR-J2S-30KA4	HA-LFS25K14				HG-JR25K14		(Note 11)			
	HA-LFS30K14			MR-J4-DU30KA4 (Note 21)	HG-JR30K14 (Note 4)		SC-J2SJ4BS08 (Note 18)			
MR-J2S-37KA4	HA-LFS37K14			MR-J4-DU37KA4 (Note 21)	HG-JR37K14		SC-J2SJ4BS09 (Note 18)			
[Medium/large capacity/low inertia HA-LFS 1500 r/min series, standard/with brake] ((B) represents models with brake)										
MR-J2S-700A4	HA-LFS701M4(B)	(Note 16)		MR-J4-700A4	HG-JR701M4(B) (Note 4)	× (Note 3)	SC-J2SJ4BS05 (Note 18)	SC-J2SJ4PW3C1M-■	Existing cable can be used.	• Existing brake cable can be used. • Cooling fan cable (Note 9)
MR-J2S-11KA4	HA-LFS11K1M4(B)			MR-J4-11KA4	HG-JR11K1M4(B)		SC-J2SJ4BS06 (Note 18)			
MR-J2S-15KA4	HA-LFS15K1M4(B)			MR-J4-15KA4	HG-JR15K1M4(B) (Note 4)					
MR-J2S-22KA4	HA-LFS22K1M4			MR-J4-22KA4	HG-JR22K1M4		SC-J2SJ4BS07 (Note 18)	(Note 8)	(Note 17)	• Cooling fan conversion cable SC-J2SJ4FAN1C1M
MR-J2S-30KA4	HA-LFS30K1M4			MR-J4-DU30KA4 (Note 21)	HG-JR30K1M4		SC-J2SJ4BS08 (Note 18)			
MR-J2S-37KA4	HA-LFS37K1M4			MR-J4-DU37KA4 (Note 21)	HG-JR37K1M4		SC-J2SJ4BS09 (Note 18)			
MR-J2S-45KA4	HA-LFS45K1M4			MR-J4-DU45KA4 (Note 21)	HG-JR45K1M4 (Note 4)					
MR-J2S-55KA4	HA-LFS50K1M4			MR-J4-DU55KA4 (Note 21)	HG-JR55K1M4					
[Medium/large capacity/low inertia HA-LFS 2000 r/min series, standard/with brake] ((B) represents models with brake)										
MR-J2S-11KA4	HA-LFS11K24(B)	MR-J4-11KA4	SC-J2SJ4BS06 (Note 18)	MR-J4-11KA4	HG-JR11K1M4(B) (Note 4)	× (Note 3)	SC-J2SJ4BS06 (Note 18)	SC-J2SJ4PW3C1M-■	Existing cable can be used.	• Existing brake cable can be used. • Cooling fan cable (Note 9)
MR-J2S-15KA4	HA-LFS15K24(B)	MR-J4-15KA4 (Note 10)	SC-J2SJ4BS06 (Note 18)	MR-J4-11KA4 (Note 10)	HG-JR11K1M4(B)					
MR-J2S-22KA4	HA-LFS22K24(B)	MR-J4-22KA4 (Note 10)	SC-J2SJ4BS07 (Note 18)	MR-J4-15KA4 (Note 10)	HG-JR15K1M4(B)		(Note 11)			
MR-J2S-30KA4	HA-LFS30K24	MR-J4-DU30KA4 (Note 10, 21)	SC-J2SJ4BS08 (Note 18)	MR-J4-22KA4 (Note 10)	HG-JR22K1M4			(Note 8)	(Note 17)	• Cooling fan conversion cable SC-J2SJ4FAN1C1M
MR-J2S-37KA4	HA-LFS37K24	MR-J4-DU37KA4 (Note 10, 21)	SC-J2SJ4BS09 (Note 18)	MR-J4-DU30KA4 (Note 10, 21)	HG-JR30K1M4		SC-J2SJ4BS09 (Note 18)			
MR-J2S-45KA4	HA-LFS45K24	MR-J4-DU45KA4 (Note 10, 21)		MR-J4-DU37KA4 (Note 10, 21)	HG-JR37K1M4					
MR-J2S-55KA4	HA-LFS55K24	MR-J4-DU55KA4 (Note 10, 21)		MR-J4-DU45KA4 (Note 10, 21)	HG-JR45K1M4 (Note 4)					

Refer to Appendix page 2-65 for important points to note.

4.5 SSCNET Interface Replacement Combination List (400 V Class)

(1) Existing HC-SFS motor series (standard/with brake, G2 reducer)

○: Compatible; △: Limited functions or compatible with certain conditions; ×: Incompatible

(1)		(2)		(3)	(4)		(5)		
Existing model (Note 13)		Primary/secondary/simultaneous replacement models (Note 5, 14)			Secondary replacement/simultaneous replacement models				
Servo amplifier model	Servo motor model	Servo amplifier model (Note 1, 12)	SSCNET conversion unit model (Note 1)	Renewal kit model	Servo motor model (Note 1)	Compatibility	Motor side conversion cable model: Power supply conversion cable	Motor side conversion cable model: Encoder conversion cable	Motor side conversion cable model: Brake conversion cable
[Medium capacity/medium inertia HC-SFS series, standard/with brake] ((B) represents models with brake)									
MR-J2S-60B4	HC-SFS524(B)	MR-J4-60B4-RJ020	MR-J4-T20	SC-J2SJ4BS02 (Note 18)	HG-SR524(B)	△ (Note 6)	SC-SAJ3PW2KC1M-S2	SC-HAJ3ENM3C1M	(Note 7)
MR-J2S-100B4	HC-SFS1024(B)	MR-J4-100B4-RJ020			HG-SR1024(B)				
MR-J2S-200B4	HC-SFS1524(B)	MR-J4-200B4-RJ020		SC-J2SJ4BS03 (Note 18)	HG-SR1524(B)				
	HC-SFS2024(B)				HG-SR2024(B)		SC-HAJ3PW1C1M		
MR-J2S-350B4	HC-SFS3524(B)	MR-J4-350B4-RJ020		SC-J2SJ4BS04 (Note 18)	HG-SR3524(B)				
MR-J2S-500B4	HC-SFS5024(B)	MR-J4-500B4-RJ020		(Note 19)	HG-SR5024(B)				
MR-J2S-700B4	HC-SFS7024(B)	MR-J4-700B4-RJ020		SC-J2SJ4BS05 (Note 18)	HG-SR7024(B)		Existing cable can be used.		
[Medium capacity/medium inertia HC-SFS series with high-precision reducer (G2)] ((B) represents models with brake)									
MR-J2S-60B4	HC-SFS524(B)G2 1/5	MR-J4-60B4-RJ020	MR-J4-T20	SC-J2SJ4BS02 (Note 18)	HG-SR524(B)G7 1/5	× (Note 3) (Note 6)	SC-SAJ3PW2KC1M-S2	SC-HAJ3ENM3C1M	(Note 7)
	HC-SFS524(B)G2 1/9				HG-SR524(B)G7 1/11				
	HC-SFS524(B)G2 1/20				HG-SR524(B)G7 1/21				
	HC-SFS524(B)G2 1/29				HG-SR524(B)G7 1/33				
	HC-SFS524(B)G2 1/45				HG-SR524(B)G7 1/45				
MR-J2S-100B4	HC-SFS1024(B)G2 1/5	MR-J4-100B4-RJ020			HG-SR1024(B)G7 1/5				
	HC-SFS1024(B)G2 1/9				HG-SR1024(B)G7 1/11				
	HC-SFS1024(B)G2 1/20				HG-SR1024(B)G7 1/21				
	HC-SFS1024(B)G2 1/29				HG-SR1024(B)G7 1/33				
	HC-SFS1024(B)G2 1/45				HG-SR1024(B)G7 1/45				
MR-J2S-200B4	HC-SFS1524(B)G2 1/5	MR-J4-200B4-RJ020		SC-J2SJ4BS03 (Note 18)	HG-SR1524(B)G7 1/5				
	HC-SFS1524(B)G2 1/9				HG-SR1524(B)G7 1/11				
	HC-SFS1524(B)G2 1/20				HG-SR1524(B)G7 1/21				
	HC-SFS1524(B)G2 1/29				HG-SR1524(B)G7 1/33				
	HC-SFS1524(B)G2 1/45				HG-SR1524(B)G7 1/45				
	HC-SFS2024(B)G2 1/5				HG-SR2024(B)G7 1/5		SC-HAJ3PW1C1M		
	HC-SFS2024(B)G2 1/9				HG-SR2024(B)G7 1/11				
	HC-SFS2024(B)G2 1/20				HG-SR2024(B)G7 1/21				
	HC-SFS2024(B)G2 1/29				HG-SR2024(B)G7 1/33				
	HC-SFS2024(B)G2 1/45				HG-SR2024(B)G7 1/45				
MR-J2S-350B4	HC-SFS3524(B)G2 1/5	MR-J4-350B4-RJ020		SC-J2SJ4BS04 (Note 18)	HG-SR3524(B)G7 1/5				
	HC-SFS3524(B)G2 1/9				HG-SR3524(B)G7 1/11				
	HC-SFS3524(B)G2 1/20				HG-SR3524(B)G7 1/21				
MR-J2S-500B4	HC-SFS5024(B)G2 1/5	MR-J4-500B4-RJ020		(Note 19)	HG-SR5024(B)G7 1/5				
	HC-SFS5024(B)G2 1/9				HG-SR5024(B)G7 1/11				
MR-J2S-700B4	HC-SFS7024(B)G2 1/5	MR-J4-700B4-RJ020		SC-J2SJ4BS05 (Note 18)	HG-SR7024(B)G7 1/5		Existing cable can be used.		

Refer to Appendix page 2-65 for important points to note.

(2) Existing HC-SFS motor series (G1 reducer)

○: Compatible; △: Limited functions or compatible with certain conditions; ×: Incompatible

(1)		(2)		(3)	(4)		(5)		
Existing model (Note 13)		Primary/secondary/simultaneous replacement models (Note 5, 14)			Secondary replacement/simultaneous replacement models				
Servo amplifier model	Servo motor model	Servo amplifier model (Note 1, 12)	SSCNET conversion unit model (Note 1)	Renewal kit model	Servo motor model (Note 1)	Compatibility	Motor side conversion cable model: Power supply conversion cable	Motor side conversion cable model: Encoder conversion cable	Motor side conversion cable model: Brake conversion cable
[Medium capacity/medium inertia HC-SFS series with general reducer (G1)] ((B) represents models with brake, (H) represents foot-mounting)									
MR-J2S-60B4	HC-SFS524(B)G1(H) 1/6	MR-J4-60B4-RJ020	MR-J4-T20	SC-J2SJ4BS02 (Note 18)	HG-SR524(B)G1(H) 1/6	△ (Note 6)	SC-SAJ3PW2KC1M-S2	SC-HAJ3ENM3C1M	(Note 7)
	HC-SFS524(B)G1(H) 1/11				HG-SR524(B)G1(H) 1/11				
	HC-SFS524(B)G1(H) 1/17				HG-SR524(B)G1(H) 1/17				
	HC-SFS524(B)G1(H) 1/29				HG-SR524(B)G1(H) 1/29				
	HC-SFS524(B)G1(H) 1/35				HG-SR524(B)G1(H) 1/35				
	HC-SFS524(B)G1(H) 1/43				HG-SR524(B)G1(H) 1/43				
	HC-SFS524(B)G1(H) 1/59				HG-SR524(B)G1(H) 1/59				
MR-J2S-100B4	HC-SFS1024(B)G1(H) 1/6	MR-J4-100B4-RJ020			HG-SR1024(B)G1(H) 1/6				
	HC-SFS1024(B)G1(H) 1/11				HG-SR1024(B)G1(H) 1/11				
	HC-SFS1024(B)G1(H) 1/17				HG-SR1024(B)G1(H) 1/17				
	HC-SFS1024(B)G1(H) 1/29				HG-SR1024(B)G1(H) 1/29				
	HC-SFS1024(B)G1(H) 1/35				HG-SR1024(B)G1(H) 1/35				
	HC-SFS1024(B)G1(H) 1/43				HG-SR1024(B)G1(H) 1/43				
	HC-SFS1024(B)G1(H) 1/59				HG-SR1024(B)G1(H) 1/59				
MR-J2S-200B4	HC-SFS1524(B)G1(H) 1/6	MR-J4-200B4-RJ020		SC-J2SJ4BS03 (Note 18)	HG-SR1524(B)G1(H) 1/6				
	HC-SFS1524(B)G1(H) 1/11				HG-SR1524(B)G1(H) 1/11				
	HC-SFS1524(B)G1(H) 1/17				HG-SR1524(B)G1(H) 1/17				
	HC-SFS1524(B)G1(H) 1/29				HG-SR1524(B)G1(H) 1/29				
	HC-SFS1524(B)G1(H) 1/35				HG-SR1524(B)G1(H) 1/35				
	HC-SFS1524(B)G1(H) 1/43				HG-SR1524(B)G1(H) 1/43				
	HC-SFS1524(B)G1(H) 1/59				HG-SR1524(B)G1(H) 1/59				
	HC-SFS2024(B)G1(H) 1/6				HG-SR2024(B)G1(H) 1/6		SC-HAJ3PW1C1M		
	HC-SFS2024(B)G1(H) 1/11				HG-SR2024(B)G1(H) 1/11				
	HC-SFS2024(B)G1(H) 1/17				HG-SR2024(B)G1(H) 1/17				
	HC-SFS2024(B)G1(H) 1/29				HG-SR2024(B)G1(H) 1/29				
	HC-SFS2024(B)G1(H) 1/35				HG-SR2024(B)G1(H) 1/35				
	HC-SFS2024(B)G1(H) 1/43				HG-SR2024(B)G1(H) 1/43				
	HC-SFS2024(B)G1(H) 1/59				HG-SR2024(B)G1(H) 1/59				
MR-J2S-350B4	HC-SFS3524(B)G1(H) 1/6	MR-J4-350B4-RJ020		SC-J2SJ4BS04 (Note 18)	HG-SR3524(B)G1(H) 1/6				
	HC-SFS3524(B)G1(H) 1/11				HG-SR3524(B)G1(H) 1/11				
	HC-SFS3524(B)G1(H) 1/17				HG-SR3524(B)G1(H) 1/17				
	HC-SFS3524(B)G1(H) 1/29				HG-SR3524(B)G1(H) 1/29				
	HC-SFS3524(B)G1(H) 1/35				HG-SR3524(B)G1(H) 1/35				
	HC-SFS3524(B)G1(H) 1/43				HG-SR3524(B)G1(H) 1/43				
	HC-SFS3524(B)G1(H) 1/59				HG-SR3524(B)G1(H) 1/59				
MR-J2S-500B4	HC-SFS5024(B)G1(H) 1/11	MR-J4-500B4-RJ020		(Note 19)	HG-SR5024(B)G1(H) 1/11				
	HC-SFS5024(B)G1(H) 1/17				HG-SR5024(B)G1(H) 1/17				
	HC-SFS5024(B)G1(H) 1/29				HG-SR5024(B)G1(H) 1/29				
	HC-SFS5024(B)G1(H) 1/35				HG-SR5024(B)G1(H) 1/35				
	HC-SFS5024(B)G1(H) 1/43				HG-SR5024(B)G1(H) 1/43				
MR-J2S-700B4	HC-SFS7024(B)G1(H) 1/11	MR-J4-700B4-RJ020		SC-J2SJ4BS05 (Note 18)	HG-SR7024(B)G1(H) 1/11		Existing cable can be used.		
	HC-SFS7024(B)G1(H) 1/17				HG-SR7024(B)G1(H) 1/17				
	HC-SFS7024(B)G1(H) 1/29				HG-SR7024(B)G1(H) 1/29				
	HC-SFS7024(B)G1(H) 1/35				HG-SR7024(B)G1(H) 1/35				
	HC-SFS7024(B)G1(H) 1/43				HG-SR7024(B)G1(H) 1/43				

Refer to Appendix page 2-65 for important points to note.

(3) Existing HC-SFS motor series (G5, G7 reducer)

○: Compatible; △: Limited functions or compatible with certain conditions; ×: Incompatible

(1)		(2)		(3)	(4)		(5)		
Existing model (Note 13)		Primary/secondary/simultaneous replacement models (Note 5, 14)			Secondary replacement/simultaneous replacement models				
Servo amplifier model	Servo motor model	Servo amplifier model (Note 1, 12)	SSCNET conversion unit model (Note 1)	Renewal kit model	Servo motor model (Note 1)	Compatibility	Motor side conversion cable model: Power supply conversion cable	Motor side conversion cable model: Encoder conversion cable	Motor side conversion cable model: Brake conversion cable
[Medium capacity/medium inertia HC-SFS series with high-precision reducer, flange output type (G5)] ((B) represents models with brake)									
MR-J2S-60B4	HC-SFS524(B)G5 1/5	MR-J4-60B4-RJ020	MR-J4-T20	SC-J2SJ4BS02 (Note 18)	HG-SR524(B)G5 1/5	△ (Note 6)	SC-SAJ3PW2KC1M-S2	SC-HAJ3ENM3C1M	(Note 7)
	HC-SFS524(B)G5 1/11				HG-SR524(B)G5 1/11				
	HC-SFS524(B)G5 1/21				HG-SR524(B)G5 1/21				
	HC-SFS524(B)G5 1/33				HG-SR524(B)G5 1/33				
	HC-SFS524(B)G5 1/45				HG-SR524(B)G5 1/45				
MR-J2S-100B4	HC-SFS1024(B)G5 1/5	MR-J4-100B4-RJ020			HG-SR1024(B)G5 1/5				
	HC-SFS1024(B)G5 1/11				HG-SR1024(B)G5 1/11				
	HC-SFS1024(B)G5 1/21				HG-SR1024(B)G5 1/21				
	HC-SFS1024(B)G5 1/33				HG-SR1024(B)G5 1/33				
	HC-SFS1024(B)G5 1/45				HG-SR1024(B)G5 1/45				
MR-J2S-200B4	HC-SFS1524(B)G5 1/5	MR-J4-200B4-RJ020		SC-J2SJ4BS03 (Note 18)	HG-SR1524(B)G5 1/5				
	HC-SFS1524(B)G5 1/11				HG-SR1524(B)G5 1/11				
	HC-SFS1524(B)G5 1/21				HG-SR1524(B)G5 1/21				
	HC-SFS1524(B)G5 1/33				HG-SR1524(B)G5 1/33				
	HC-SFS1524(B)G5 1/45				HG-SR1524(B)G5 1/45				
	HC-SFS2024(B)G5 1/5				HG-SR2024(B)G5 1/5		SC-HAJ3PW1C1M		
	HC-SFS2024(B)G5 1/11				HG-SR2024(B)G5 1/11				
	HC-SFS2024(B)G5 1/21				HG-SR2024(B)G5 1/21				
	HC-SFS2024(B)G5 1/33				HG-SR2024(B)G5 1/33				
	HC-SFS2024(B)G5 1/45				HG-SR2024(B)G5 1/45				
MR-J2S-350B4	HC-SFS3524(B)G5 1/5	MR-J4-350B4-RJ020		SC-J2SJ4BS04 (Note 18)	HG-SR3524(B)G5 1/5				
	HC-SFS3524(B)G5 1/11				HG-SR3524(B)G5 1/11				
	HC-SFS3524(B)G5 1/21				HG-SR3524(B)G5 1/21				
MR-J2S-500B4	HC-SFS5024(B)G5 1/5	MR-J4-500B4-RJ020		(Note 19)	HG-SR5024(B)G5 1/5				
	HC-SFS5024(B)G5 1/11				HG-SR5024(B)G5 1/11				
MR-J2S-700B4	HC-SFS7024(B)G5 1/5	MR-J4-700B4-RJ020		SC-J2SJ4BS05 (Note 18)	HG-SR7024(B)G5 1/5		Existing cable can be used.		
[Medium capacity/medium inertia HC-SFS series with high-precision reducer, shaft output type (G7)] ((B) represents models with brake)									
MR-J2S-60B4	HC-SFS524(B)G7 1/5	MR-J4-60B4-RJ020	MR-J4-T20	SC-J2SJ4BS02 (Note 18)	HG-SR524(B)G7 1/5	△ (Note 6)	SC-SAJ3PW2KC1M-S2	SC-HAJ3ENM3C1M	(Note 7)
	HC-SFS524(B)G7 1/11				HG-SR524(B)G7 1/11				
	HC-SFS524(B)G7 1/21				HG-SR524(B)G7 1/21				
	HC-SFS524(B)G7 1/33				HG-SR524(B)G7 1/33				
	HC-SFS524(B)G7 1/45				HG-SR524(B)G7 1/45				
MR-J2S-100B4	HC-SFS1024(B)G7 1/5	MR-J4-100B4-RJ020			HG-SR1024(B)G7 1/5				
	HC-SFS1024(B)G7 1/11				HG-SR1024(B)G7 1/11				
	HC-SFS1024(B)G7 1/21				HG-SR1024(B)G7 1/21				
	HC-SFS1024(B)G7 1/33				HG-SR1024(B)G7 1/33				
	HC-SFS1024(B)G7 1/45				HG-SR1024(B)G7 1/45				
MR-J2S-200B4	HC-SFS1524(B)G7 1/5	MR-J4-200B4-RJ020		SC-J2SJ4BS03 (Note 18)	HG-SR1524(B)G7 1/5				
	HC-SFS1524(B)G7 1/11				HG-SR1524(B)G7 1/11				
	HC-SFS1524(B)G7 1/21				HG-SR1524(B)G7 1/21				
	HC-SFS1524(B)G7 1/33				HG-SR1524(B)G7 1/33				
	HC-SFS1524(B)G7 1/45				HG-SR1524(B)G7 1/45				
	HC-SFS2024(B)G7 1/5				HG-SR2024(B)G7 1/5		SC-HAJ3PW1C1M		
	HC-SFS2024(B)G7 1/11				HG-SR2024(B)G7 1/11				
	HC-SFS2024(B)G7 1/21				HG-SR2024(B)G7 1/21				
	HC-SFS2024(B)G7 1/33				HG-SR2024(B)G7 1/33				
	HC-SFS2024(B)G7 1/45				HG-SR2024(B)G7 1/45				
MR-J2S-350B4	HC-SFS3524(B)G7 1/5	MR-J4-350B4-RJ020		SC-J2SJ4BS04 (Note 18)	HG-SR3524(B)G7 1/5				
	HC-SFS3524(B)G7 1/11				HG-SR3524(B)G7 1/11				
	HC-SFS3524(B)G7 1/21				HG-SR3524(B)G7 1/21				
MR-J2S-500B4	HC-SFS5024(B)G7 1/5	MR-J4-500B4-RJ020		(Note 19)	HG-SR5024(B)G7 1/5				
	HC-SFS5024(B)G7 1/11				HG-SR5024(B)G7 1/11				
MR-J2S-700B4	HC-SFS7024(B)G7 1/5	MR-J4-700B4-RJ020		SC-J2SJ4BS05 (Note 18)	HG-SR7024(B)G7 1/5		Existing cable can be used.		

Refer to Appendix page 2-65 for important points to note.

(4) Existing HA-LFS motor series

○: Compatible; △: Limited functions or compatible with certain conditions; ×: Incompatible

(1)		(2)		(3)	(4)		(5)		(6)	(7)		
Existing model (Note 13)		Primary replacement model (Note 5)			Secondary replacement/simultaneous replacement models							
										Motor side conversion cable model		
Servo amplifier model	Servo motor model	Servo amplifier model (Note 1, 12)	SSCNET conversion unit model (Note 1)	Renewal kit model	Servo amplifier model (Note 1)	SSCNET conversion unit model (Note 1)	Servo motor model (Note 1)	Compatibility	Renewal kit model	Power supply conversion Cable	Encoder Conversion cable	Brake/Conversion cable for the cooling fan
[Medium/large capacity/low inertia HA-LFS 1000 r/min series, standard/with brake] ((B) represents models with brake)												
MR-J2S-700B4	HA-LFS6014(B)	(Note 16)			MR-J4-700B4-RJ020	MR-J4-T20	HG-JR6014(B) (Note 4)	× (Note 3)	SC-J2SJ4BS05 (Note 18)	SC-J2SJ4PW3C1M-■	Existing cable can be used	• Existing brake cable can be used. • Cooling fan cable (Note 9)
MR-J2S-11KB4	HA-LFS8014(B)				MR-J4-11KB4-RJ020		HG-JR8014(B) (Note 4)		SC-J2SJ4BS06 (Note 18)			
	HA-LFS12K14(B)						HG-JR12K14(B) (Note 4)					
MR-J2S-15KB4	HA-LFS15K14				MR-J4-15KB4-RJ020		HG-JR15K14			(Note 8)	(Note 17)	• Cooling fan conversion cable SC-J2SJ4FAN1C1M
MR-J2S-22KB4	HA-LFS20K14				MR-J4-22KB4-RJ020		HG-JR20K14		SC-J2SJ4BS07 (Note 18)			
MR-J2S-30KB4	HA-LFS25K14						HG-JR25K14		(Note 11)			
	HA-LFS30K14				MR-J4-DU30KB4-RJ020 (Note 21)		HG-JR30K14 (Note 4)		SC-J2SJ4BS08 (Note 18)			
MR-J2S-37KB4	HA-LFS37K14				MR-J4-DU37KB4-RJ020 (Note 21)		HG-JR37K14		SC-J2SJ4BS09 (Note 18)			
[Medium/large capacity/low inertia HA-LFS 1500 r/min series, standard/with brake] ((B) represents models with brake)												
MR-J2S-700B4	HA-LFS701M4(B)	(Note 16)			MR-J4-700B4-RJ020	MR-J4-T20	HG-JR701M4(B) (Note 4)	× (Note 3)	SC-J2SJ4BS05 (Note 18)	SC-J2SJ4PW3C1M-■	Existing cable can be used	• Existing brake cable can be used. • Cooling fan cable (Note 9)
MR-J2S-11KB4	HA-LFS11K1M4(B)				MR-J4-11KB4-RJ020		HG-JR11K1M4(B)		SC-J2SJ4BS06 (Note 18)			
MR-J2S-15KB4	HA-LFS15K1M4(B)				MR-J4-15KB4-RJ020		HG-JR15K1M4(B) (Note 4)					
MR-J2S-22KB4	HA-LFS22K1M4				MR-J4-22KB4-RJ020		HG-JR22K1M4		SC-J2SJ4BS07 (Note 18)	(Note 8)	(Note 17)	• Cooling fan conversion cable SC-J2SJ4FAN1C1M
MR-J2S-30KB4	HA-LFS30K1M4				MR-J4-DU30KB4-RJ020 (Note 21)		HG-JR30K1M4		SC-J2SJ4BS08 (Note 18)			
MR-J2S-37KB4	HA-LFS37K1M4				MR-J4-DU37KB4-RJ020 (Note 21)		HG-JR37K1M4		SC-J2SJ4BS09 (Note 18)			
MR-J2S-45KB4	HA-LFS45K1M4				MR-J4-DU45KB4-RJ020 (Note 21)		HG-JR45K1M4					
MR-J2S-55KB4	HA-LFS50K1M4				MR-J4-DU55KB4-RJ020 (Note 21)		HG-JR55K1M4					
[Medium/large capacity/low inertia HA-LFS 2000 r/min series, standard/with brake] ((B) represents models with brake)												
MR-J2S-11KB4	HA-LFS11K24(B)	MR-J4-11KB4-RJ020	MR-J4-T20	SC-J2SJ4BS06 (Note 18)	MR-J4-11KB4-RJ020	MR-J4-T20	HG-JR11K1M4(B) (Note 4)	× (Note 3)	SC-J2SJ4BS06 (Note 18)	SC-J2SJ4PW3C1M-■	Existing cable can be used	• Existing brake cable can be used. • Cooling fan cable (Note 9)
MR-J2S-15KB4	HA-LFS15K24(B)	MR-J4-15KB4-RJ020 (Note 10)		SC-J2SJ4BS06 (Note 18)	MR-J4-11KB4-RJ020 (Note 10)		HG-JR11K1M4(B)					
MR-J2S-22KB4	HA-LFS22K24(B)	MR-J4-22KB4-RJ020 (Note 10)		SC-J2SJ4BS07 (Note 18)	MR-J4-15KB4-RJ020 (Note 10)		HG-JR15K1M4(B)		(Note 11)			
MR-J2S-30KB4	HA-LFS30K24	MR-J4-DU30KB4-RJ020 (Note 10, 21)		SC-J2SJ4BS08 (Note 18)	MR-J4-22KB4-RJ020 (Note 10)		HG-JR22K1M4			(Note 8)	(Note 17)	• Cooling fan conversion cable SC-J2SJ4FAN1C1M
MR-J2S-37KB4	HA-LFS37K24	MR-J4-DU37KB4-RJ020 (Note 10, 21)		SC-J2SJ4BS09 (Note 18)	MR-J4-DU30KB4-RJ020 (Note 10, 21)		HG-JR30K1M4		SC-J2SJ4BS09 (Note 18)			
MR-J2S-45KB4	HA-LFS45K24	MR-J4-DU45KB4-RJ020 (Note 10, 21)			MR-J4-DU37KB4-RJ020 (Note 10, 21)		HG-JR37K1M4					
MR-J2S-55KB4	HA-LFS55K24	MR-J4-DU55KB4-RJ020 (Note 10, 21)			MR-J4-DU45KB4-RJ020 (Note 10, 21)		HG-JR45K1M4					

Refer to Appendix page 2-65 for important points to note.

Note
1. Purchase from Mitsubishi Electric.
2. The actual reduction ratio is different when replacing a servo motor. Note that it is necessary to adjust the electronic gear after checking the actual reduction ratio of the servo motor. Refer to Part 8 for details.
3. Note that because the flange dimensions and shaft end dimensions are not compatible it is necessary to change the servo motor shaft connection portion, including the mounting portion and the coupling/pulley when replacing the servo motor. Refer to Part 8 for details.
4. Before replacing the servo motor, the moment of inertia is different from the servo motor before replacement. Take note of the load to motor inertia ratio. Review of the operation pattern is necessary depending on the existing device. Refer to Part 8 for details.
5. If the gain of the existing servo amplifier is extremely high, there may be slight differences in characteristics upon primary replacement. Make sure to set the gain again.
6. Note that it is because the total length of the servo motor becomes shorter, the servo motor connector may interfere with the device side.
7. Laying a new electromagnetic brake cable is required when performing a secondary replacement or simultaneous replacement of a servo motor with brake. Use a servo motor electromagnetic brake cable (SC-BKC1CBL_M-L or SC-BKC1CBL_M-H) made by Mitsubishi Electric System & Service Co., Ltd.
8. If the servo motor is replaced, it is necessary to change the crimped terminal of the existing power supply cable. Refer to Part 8 for details.
9. There is no cooling fan in the replacement servo motor when the servo motor is replaced. Because the existing wiring becomes unnecessary, insulate as needed.
10. Simultaneous replacement is recommended because replacing the servo amplifier again is necessary at secondary replacement.
11. The renewal kit cannot be used for secondary or simultaneous replacement due to large differences in servo amplifier shape resulting from changes in servo amplifier capacity.
12. The software version for primary replacement of servo amplifiers are different depending on the servo motor. Consult local sales office when making an order.
13. Contact local sales office regarding replacement of existing models that have not been listed.
14. The replacement servo amplifier, SSCNET conversion unit, and renewal kit are the same for primary, secondary, and simultaneous replacement.
15. When replacing a servo motor, the torque characteristics are different compared with the servo motor before replacement. Refer to Part 8 for details.
16. This is not compatible with primary replacement. Perform a simultaneous replacement of a servo amplifier and a servo motor.
17. When performing a replacement of a servo motor, a new encoder cable is required to be laid. Contact Mitsubishi Electric System & Service Co., Ltd. if a new cable required.
18. A conversion cable on the servo amplifier side is not included in the package. Purchase the following cable set separately according to a servo amplifier to be used and its capacity.
    MR-J4-700A4 or less: SC-J2SJ4CSET-01
    MR-J4-11KA4 or more: SC-J2SJ4CSET-02
    MR-J4-700B4 or less: SC-J2SBJ4CSET-01
    MR-J4-11KB4 or more: SC-J2SBJ4CSET-02
19. When combining, a renewal kit is not required. Purchase only a conversion cable on the servo amplifier side, if necessary.
20. This servo amplifier is required to be used in combination with the converter unit MR-CR55K.
21. This servo amplifier is required to be used in combination with the converter unit MR-CR55K4.

5. RENEWAL TOOL CONNECTION DIAGRAM

These diagrams are the connection diagrams for wiring the servo amplifier and servo motor when using the renewal tool.

* Since a terminal block is not included with the renewal tool (mounting attachment) for 400 V, refer to MR-J4 Servo Amplifier Instruction Manual for the detailed connection.

5.1 SC-J2SJ4(CP)KT02K to 3K

(1) Primary replacement (when replacing the servo amplifier only)

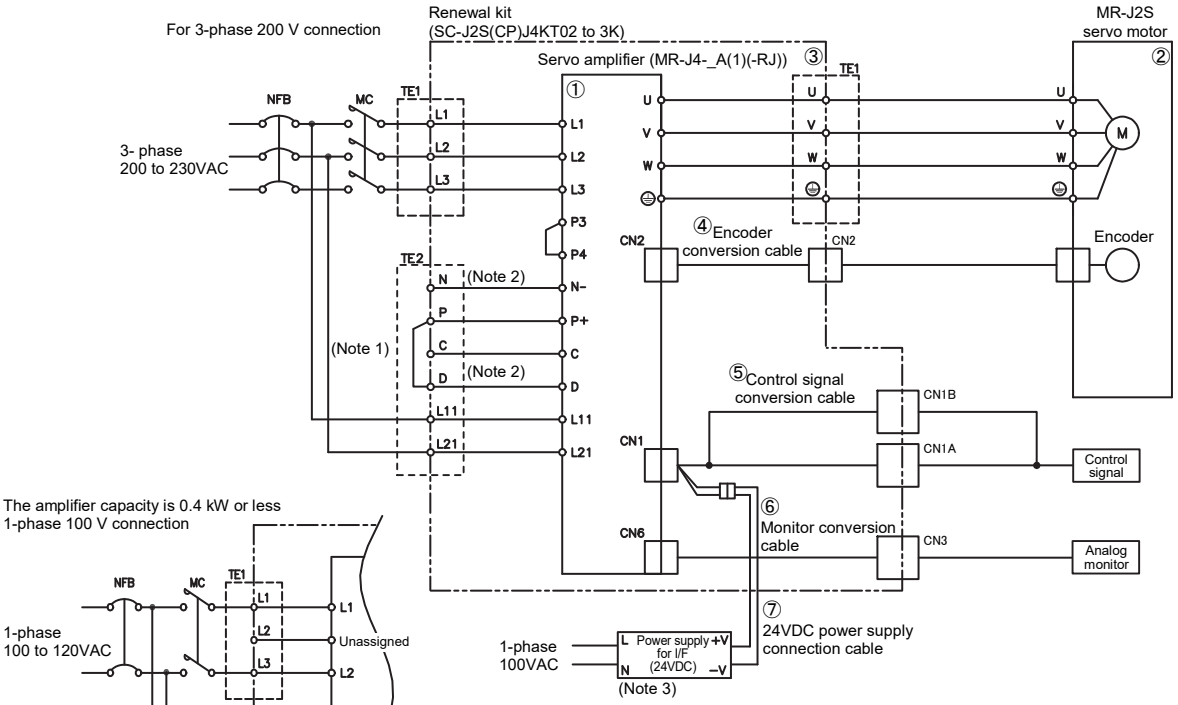

No.	Product name	
①	Servo amplifier	*1
②	Servo motor	*1
③	Renewal kit	
④	Encoder conversion cable	
⑤	Control signal conversion cable	
⑥	Monitor conversion cable	
⑦	24 V DC power supply connection cable	

*1: Manufactured by Mitsubishi Electric.

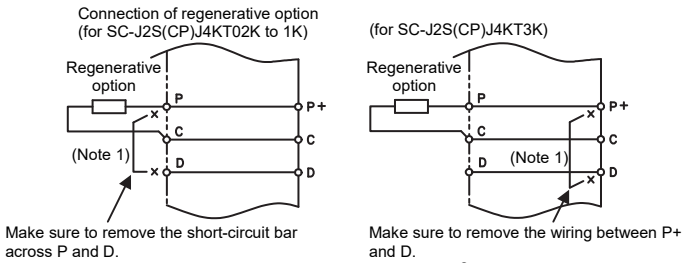

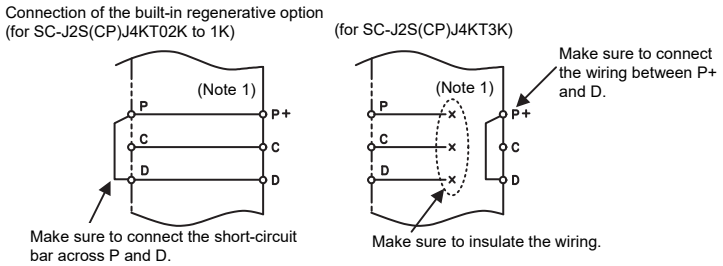

Note 1. When using the regenerative option, make sure to remove the wiring or the short-circuit bar across P (+) and D, connect with the wiring between the renewal kit and the servo amplifier, and mount the regenerative option between P and C.
When using a built-in regenerative resistor, make sure to connect the wiring or the short-circuit bar across P (+) and D. For SC-J2S(CP)J4KT3K, insulate the wiring between the renewal kit and the servo amplifier. Ensure the connection destinations are correct. The servo amplifier may malfunction if the connection destinations are incorrect.

2. The N terminal of TE2 is limited to SC-J2S(CP)J4KT1K and 3K. There is no D terminal wiring for SC-J2S(CP)J4KT3K.

3. Required only when the internal power supply (24 V DC) for the I/F is used in the existing MR-J2S servo amplifier. Not included with the renewal tool. Note that a separate 24 V DC power supply (current capacity: 80 mA or more) is required when replacing.
When connecting the 24 V DC power supply, use the "24 V DC power supply connection cable (model: SC-J2SJ4CTPWC5M)" included in the package. (Electric wire colors: Red (+ side); white (- side))

(2) Secondary replacement (when replacing the servo motor after replacing the servo amplifier) /Simultaneous replacement (when replacing the servo amplifier and the servo motor simultaneously)

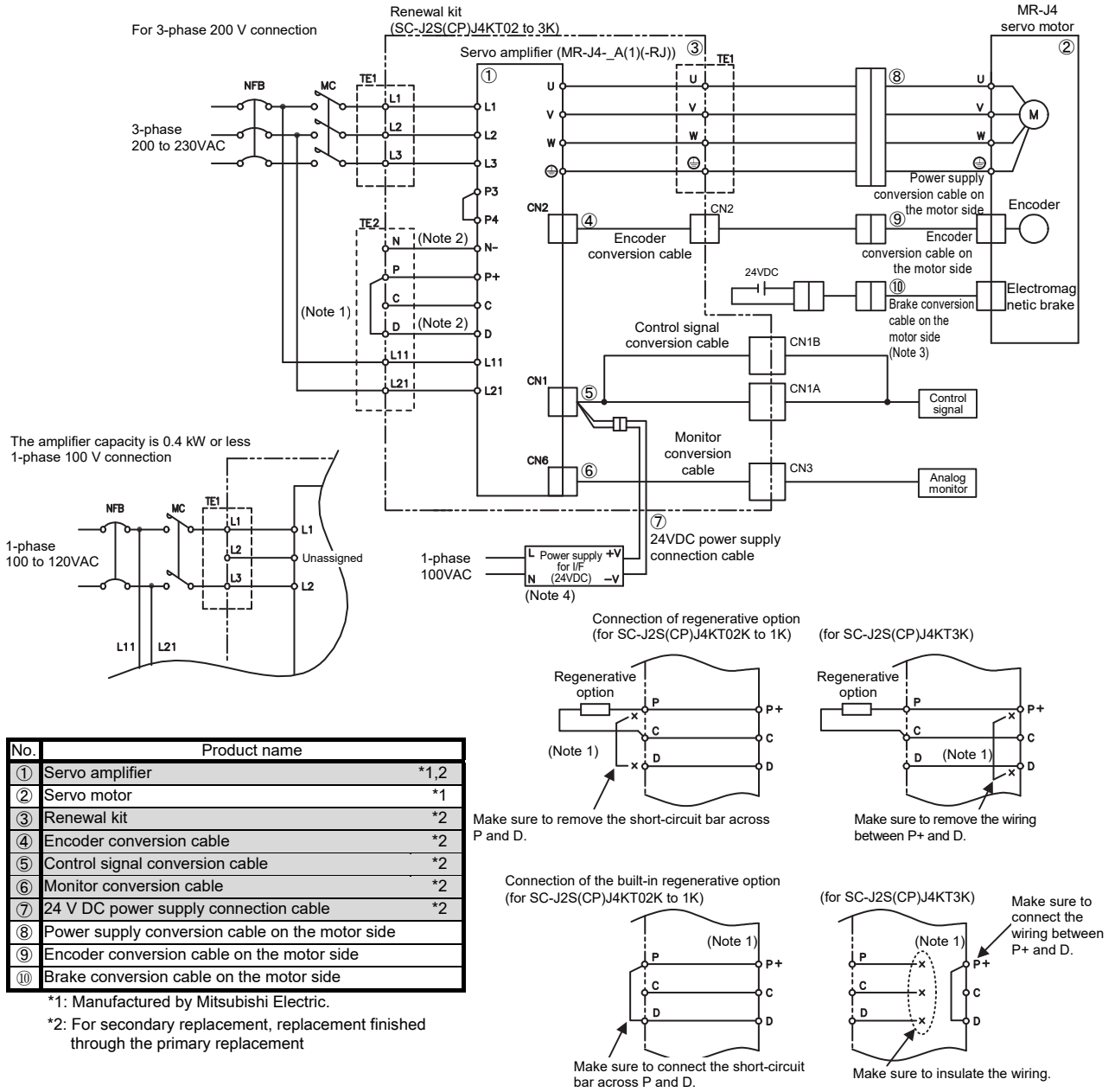

No.	Product name	
①	Servo amplifier	*1,2
②	Servo motor	*1
③	Renewal kit	*2
④	Encoder conversion cable	*2
⑤	Control signal conversion cable	*2
⑥	Monitor conversion cable	*2
⑦	24 V DC power supply connection cable	*2
⑧	Power supply conversion cable on the motor side	
⑨	Encoder conversion cable on the motor side	
⑩	Brake conversion cable on the motor side	

*1: Manufactured by Mitsubishi Electric.
*2: For secondary replacement, replacement finished through the primary replacement

Note 1. When using the regenerative option, make sure to remove the wiring or the short-circuit bar across P (+) and D, connect with the wiring between the renewal kit and the servo amplifier, and mount the regenerative option between P and C.
When using a built-in regenerative resistor, make sure to connect the wiring or the short-circuit bar across P (+) and D. For SC-J2S(CP)J4KT3K, insulate the wiring between the renewal kit and the servo amplifier. Ensure the connection destinations are correct. The servo amplifier may malfunction if the connection destinations are incorrect.

2. The N terminal of TE2 is limited to SC-J2S(CP)J4KT1K and 3K. There is no D terminal wiring for SC-J2S(CP)J4KT3K.
3. Unnecessary if electromagnetic brakes are not installed.
4. Required only when the internal power supply (24 V DC) for the I/F is used in the existing MR-J2S servo amplifier. Not included with the renewal tool. Note that a separate 24 V DC power supply (current capacity: 80 mA or more) is required when replacing.
When connecting the 24 V DC power supply, use the "24 V DC power supply connection cable (model: SC-J2SJ4CTPWC5M)" included in the package. (Electric wire colors: Red (+ side); white (- side))

5.2 SC-J2S(CP)J4KT5K

(1) Primary replacement (when replacing the servo amplifier only)

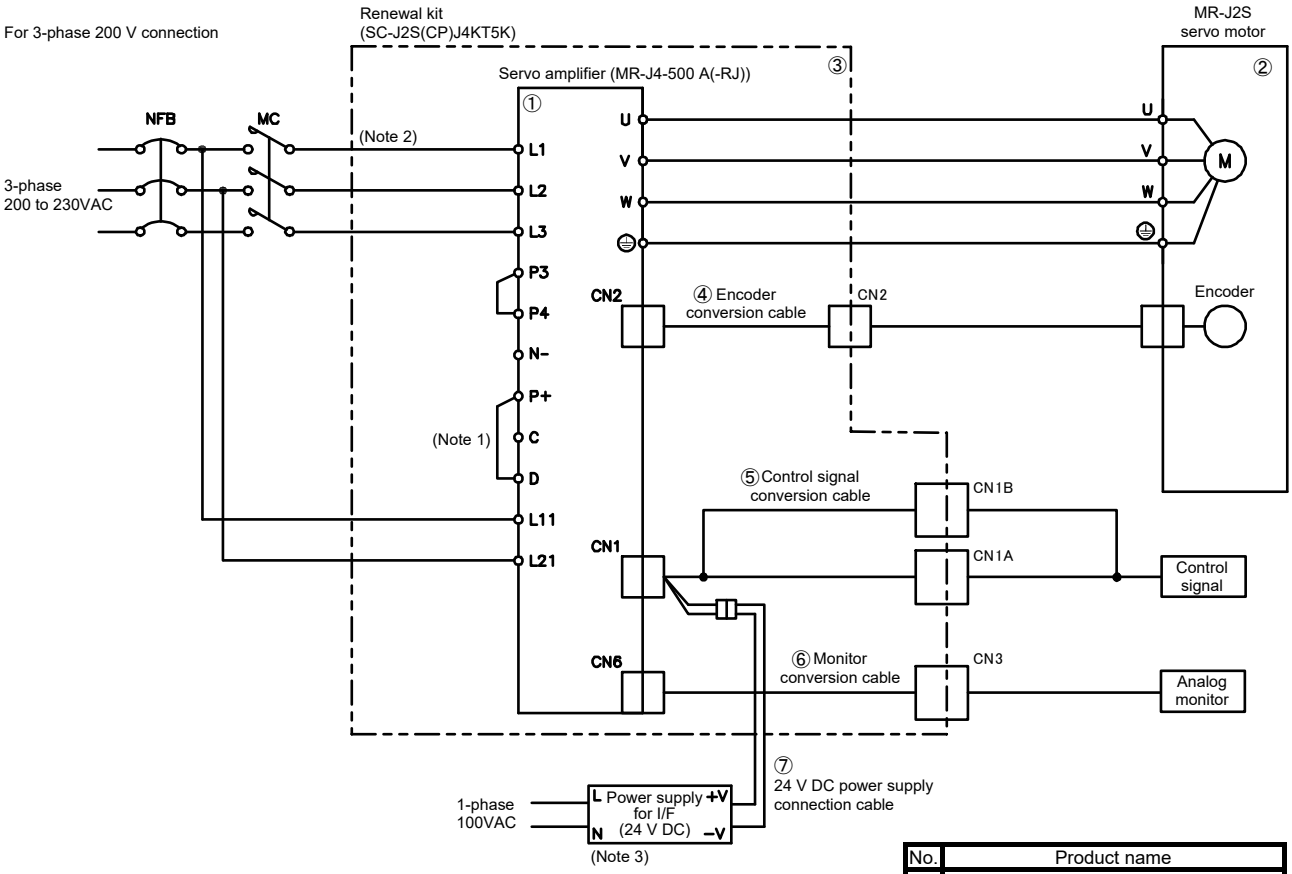

No.	Product name	
①	Servo amplifier	*1
②	Servo motor	*1
③	Renewal kit	
④	Encoder conversion cable	
⑤	Control signal conversion cable	
⑥	Monitor conversion cable	
⑦	24 V DC power supply connection cable	

*1: Manufactured by Mitsubishi Electric.

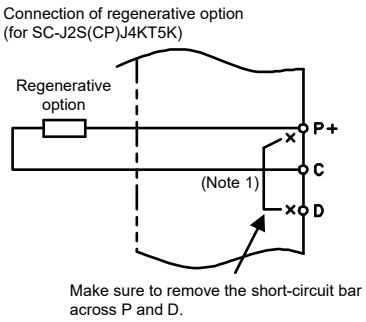

Note 1. When using the regenerative option, make sure to remove the short-circuit bar between P+ and D, connect with the wiring between the renewal kit and the servo amplifier, and mount the regenerative option between P+ and C. Ensure the connection destinations are correct. The servo amplifier may malfunction if the connection destinations are incorrect.

2. There is no conversion terminal block in the SC-J2S(CP)J4KT5K renewal kit. Directly connect to the MR-J4 servo amplifier.

3. Required only when the internal power supply (24 V DC) for the I/F is used in the existing MR-J2S servo amplifier. Not included with the renewal tool. Note that a separate 24 V DC power supply (current capacity: 80 mA or more) is required when replacing.
When connecting the 24 V DC power supply, use the "24 V DC power supply connection cable (model: SC-J2SJ4CTPWC5M)" included in the package. (Electric wire colors: Red (+ side); white (- side))

(2) Secondary replacement (when replacing the servo motor after replacing the servo amplifier)/Simultaneous replacement (when replacing the servo amplifier and the servo motor simultaneously)

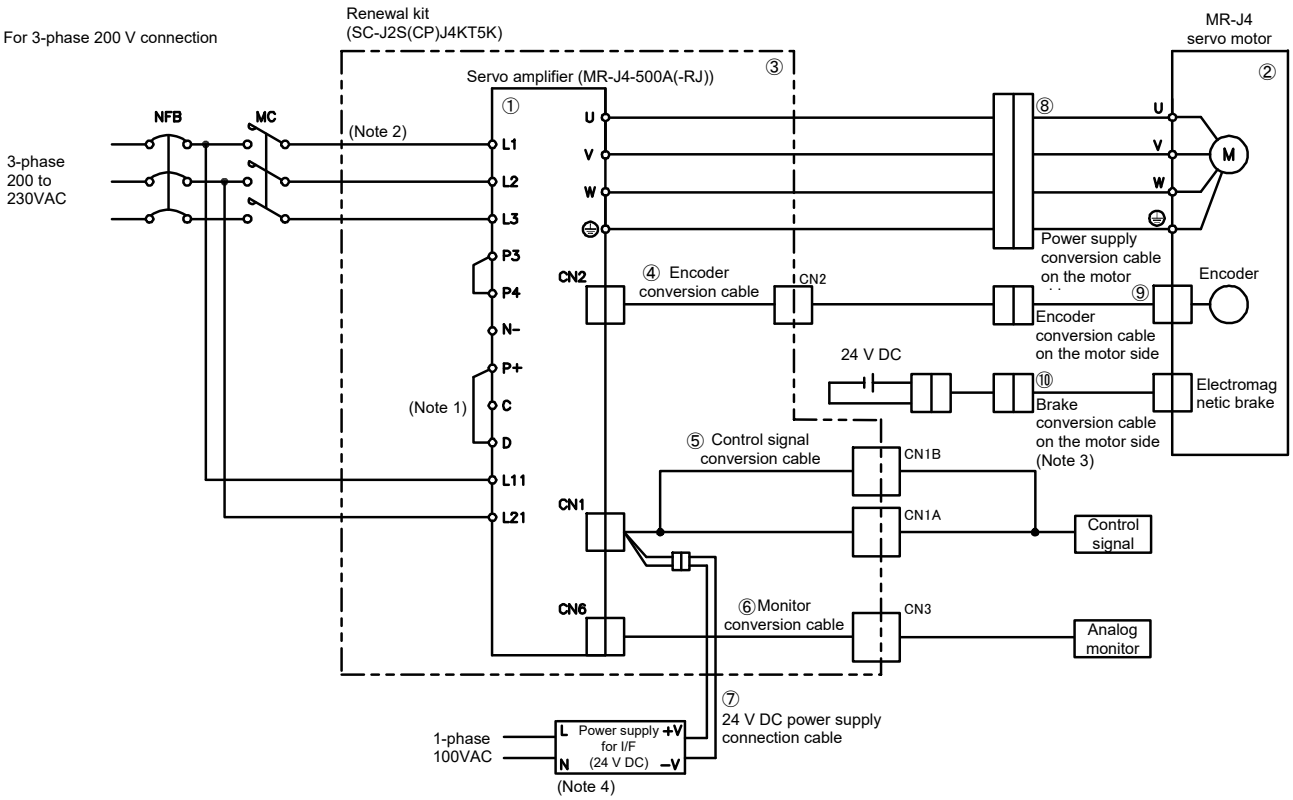

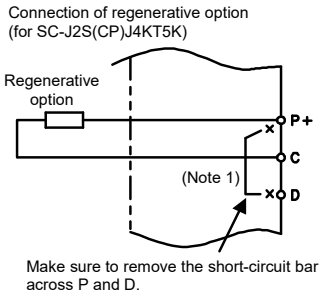

No.	Product name	
①	Servo amplifier	*1,2
②	Servo motor	*1
③	Renewal kit	
④	Encoder conversion cable	*2
⑤	Control signal conversion cable	*2
⑥	Monitor conversion cable	*2
⑦	24 V DC power supply connection cable	*2
⑧	Power supply conversion cable on the motor side	
⑨	Encoder conversion cable on the motor side	
⑩	Brake conversion cable on the motor side	

*1: Manufactured by Mitsubishi Electric.
*2: For secondary replacement, replacement finished through the primary replacement

Note 1. When using the regenerative option, make sure to remove the short-circuit bar between P+ and D, connect with the wiring between the renewal kit and the servo amplifier, and mount the regenerative option between P+ and C. Ensure the connection destinations are correct. The servo amplifier may malfunction if the connection destinations are incorrect.

2. There is no conversion terminal block in the SC-J2S(CP)J4KT5K renewal kit. Directly connect to the MR-J4 servo amplifier.

3. Unnecessary if electromagnetic brakes are not installed.

4. Required only when the internal power supply (24 V DC) for the I/F is used in the existing MR-J2S servo amplifier. Not included with the renewal tool. Note that a separate 24 V DC power supply (current capacity: 80 mA or more) is required when replacing.
When connecting the 24 V DC power supply, use the "24 V DC power supply connection cable (model: SC-J2SJ4CTPWC5M)" included in the package. (Electric wire colors: Red (+ side); white (- side))

5.3 SC-J2S(CP)J4KT7K

(1) Primary replacement (when replacing the servo amplifier only)

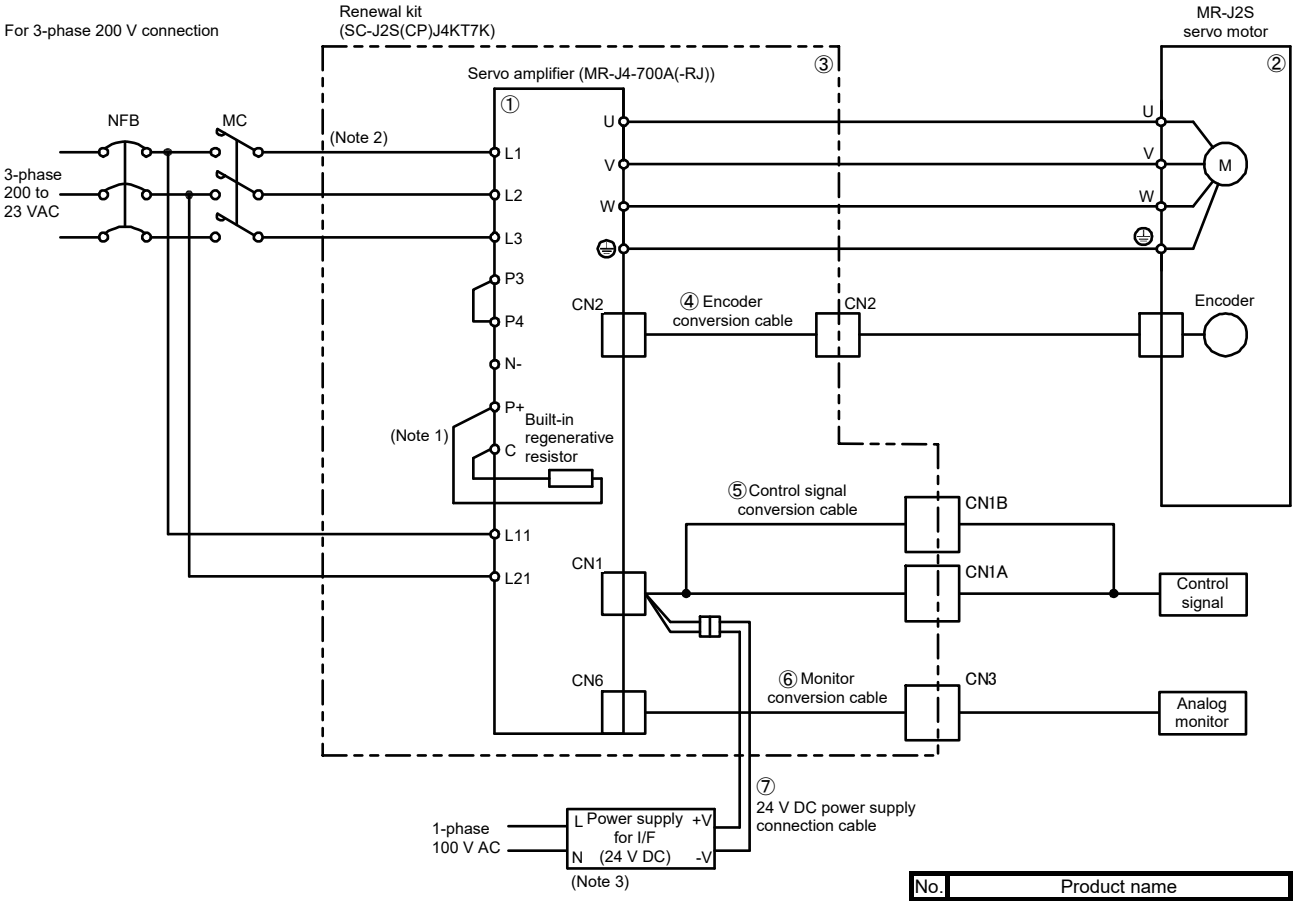

No.	Product name	
①	Servo amplifier	*1
②	Servo motor	*1
③	Renewal kit	
④	Encoder conversion cable	
⑤	Control signal conversion cable	
⑥	Monitor conversion cable	
⑦	24 V DC power supply connection cable	

*1: Manufactured by Mitsubishi Electric.

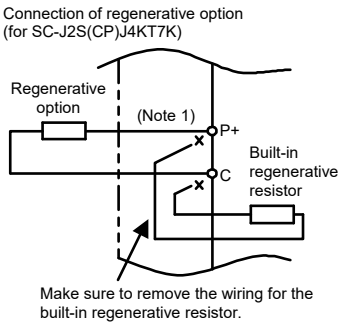

Note 1. When using the regenerative option, make sure to remove the wiring for the regenerative resistor built in to the servo amplifier, and mount the regenerative option between P+ and C. Ensure the connection destinations are correct. The servo amplifier may malfunction if the connection destinations are incorrect.

2. There is no conversion terminal block in the SC-J2S(CP)J4KT7K renewal kit. Directly connect to the MR-J4 servo amplifier.

3. Required only when the internal power supply (24 V DC) for the I/F is used in the existing MR-J2S servo amplifier. Not included with the renewal tool. Note that a separate 24 V DC power supply (current capacity: 80 mA or more) is required when replacing.
When connecting the 24 V DC power supply, use the "24 V DC power supply connection cable (model: SC-J2SJ4CTPWC5M)" included in the package. (Electric wire colors: Red (+ side); white (- side))

(2) Secondary replacement (when replacing the servo motor after replacing the servo amplifier)/Simultaneous replacement (when replacing the servo amplifier and the servo motor simultaneously)

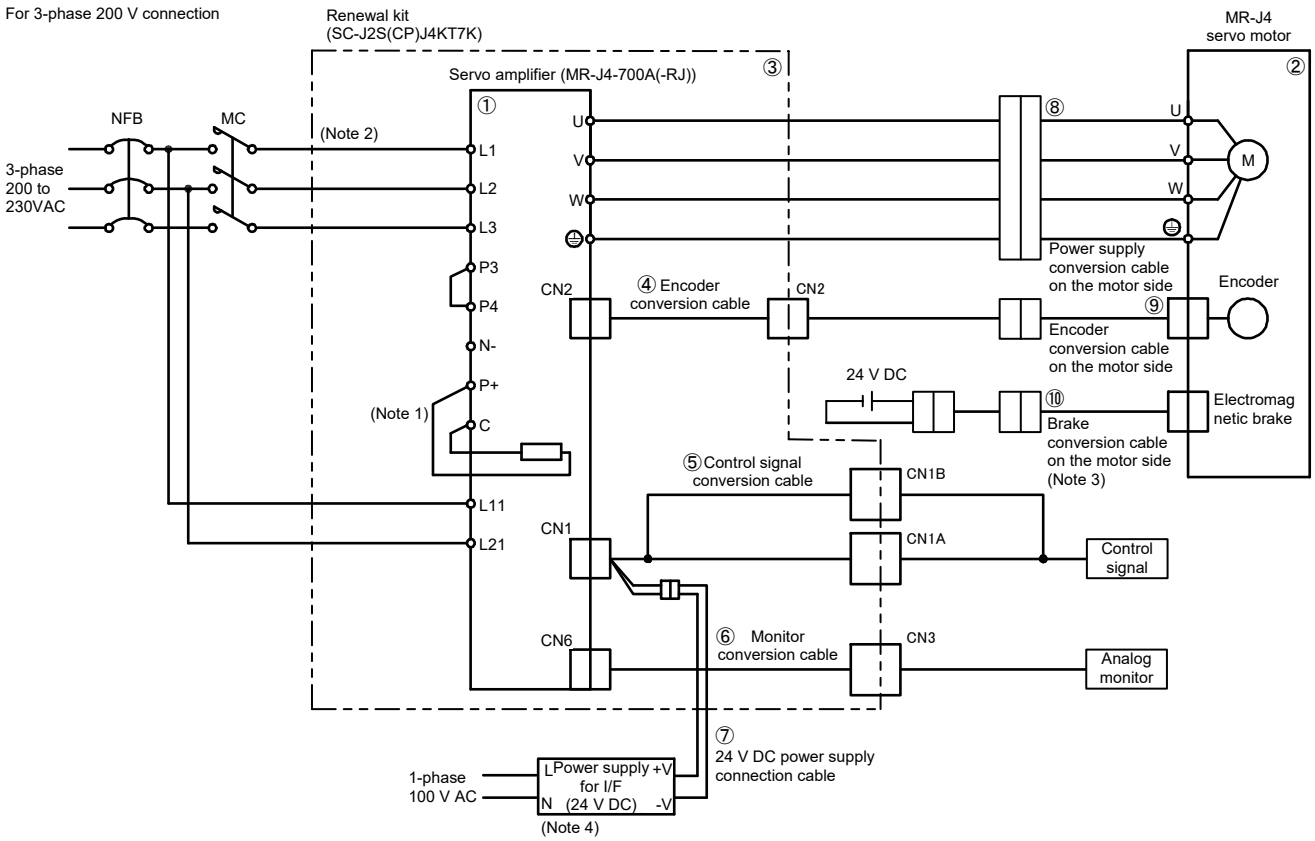

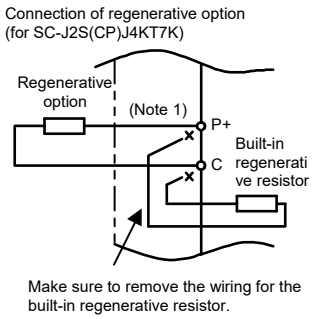

No.	Product name	
①	Servo amplifier	*1,2
②	Servo motor	*1
③	Renewal kit	
④	Encoder conversion cable	*2
⑤	Control signal conversion cable	*2
⑥	Monitor conversion cable	*2
⑦	24 V DC power supply connection cable	*2
⑧	Power supply conversion cable on the motor side	
⑨	Encoder conversion cable on the motor side	
⑩	Brake conversion cable on the motor side	

*1: Manufactured by Mitsubishi Electric.
*2: For secondary replacement, replacement finished through the primary replacement

Note 1. When using the regenerative option, make sure to remove the wiring for the regenerative resistor built in to the servo amplifier, and mount the regenerative option between P+ and C. Ensure the connection destinations are correct. The servo amplifier may malfunction if the connection destinations are incorrect.

2. There is no conversion terminal block in the SC-J2S(CP)J4KT7K renewal kit. Directly connect to the MR-J4 servo amplifier.

3. Unnecessary if electromagnetic brakes are not installed.

4. Required only when the internal power supply (24 V DC) for the I/F is used in the existing MR-J2S servo amplifier. Not included with the renewal tool. Note that a separate 24 V DC power supply (current capacity: 80 mA or more) is required when replacing.
When connecting the 24 V DC power supply, use the "24 V DC power supply connection cable (model: SC-J2SJ4CTPWC5M)" included in the package. (Electric wire colors: Red (+ side); white (- side))

5.4 SC-J2SJ4KT15K, 22K

(1) Primary replacement (when replacing the servo amplifier only)

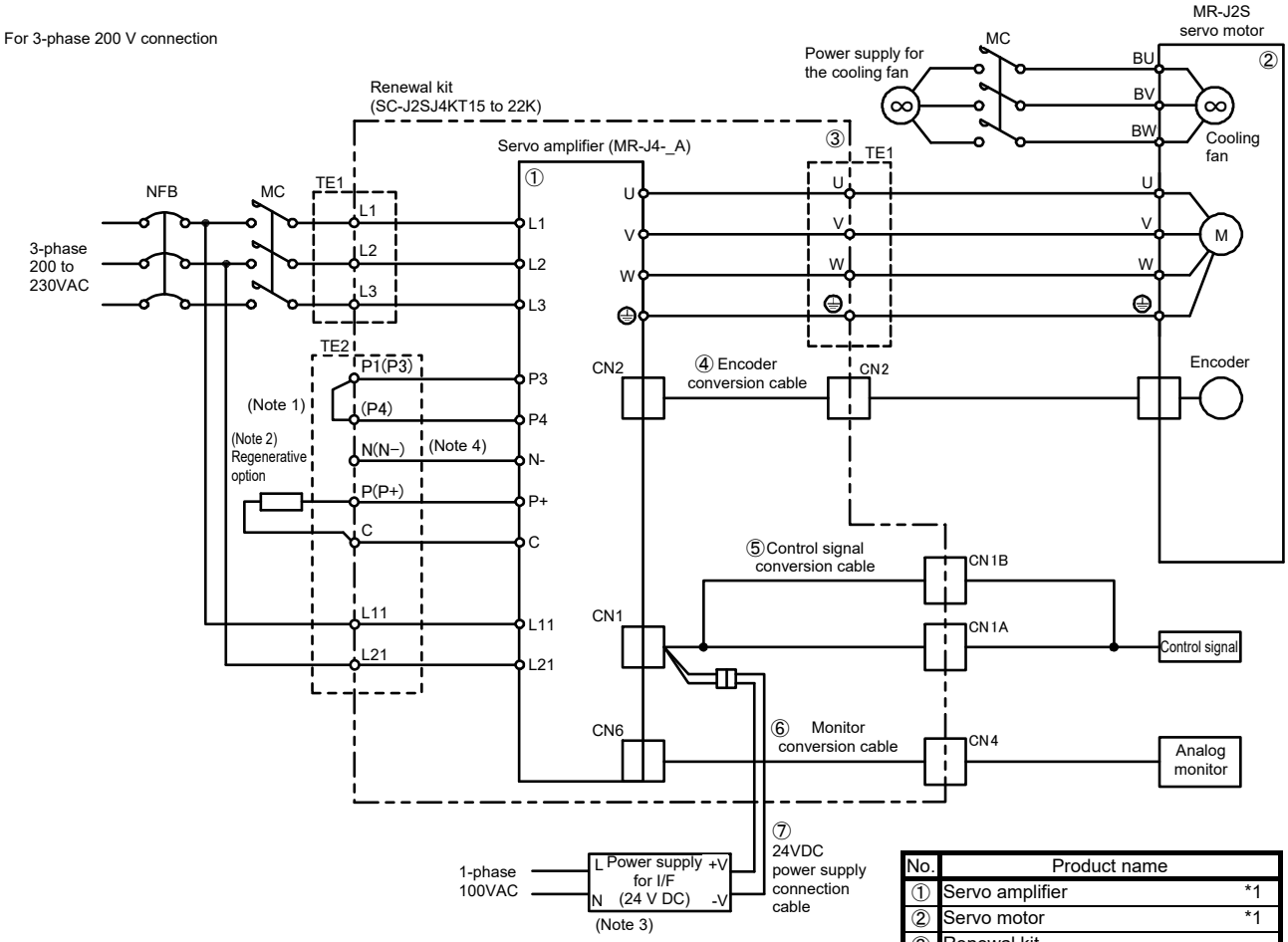

No.	Product name
①	Servo amplifier *1
②	Servo motor *1
③	Renewal kit
④	Encoder conversion cable
⑤	Control signal conversion cable
⑥	Monitor conversion cable
⑦	24 V DC power supply connection cable

*1: Manufactured by Mitsubishi Electric.

Note 1. Make sure to connect between P3 and P4. When using the power factor improving DC reactor, remove the short circuit bar between P3 and P4 before connection.

2. When using the regenerative option, make sure to mount the regenerative option between P+ and C. Ensure the connection destinations are correct. The servo amplifier may malfunction if the connection destinations are incorrect.

3. Required only when the internal power supply (24 V DC) for the I/F is used in the existing MR-J2S-_A_ servo amplifier. Not included with the renewal tool. Note that a separate 24 V DC power supply (current capacity: 80 mA or more) is required when replacing.
When connecting the 24 V DC power supply, use the "24 V DC power supply connection cable (model: SC-J2SJ4CTPWC5M)" included in the package. (Electric wire colors: Red (+ side); white (- side))

4. When connecting a power regenerative converter (FR-RC-_K) and a brake unit (FR-BU2-_K), connect between P+ and N-. Make sure to remove the built-in regenerative resistor or the regenerative option.

(2) Secondary replacement (when replacing the servo motor after replacing the servo amplifier)/Simultaneous replacement (when replacing the servo amplifier and the servo motor simultaneously)

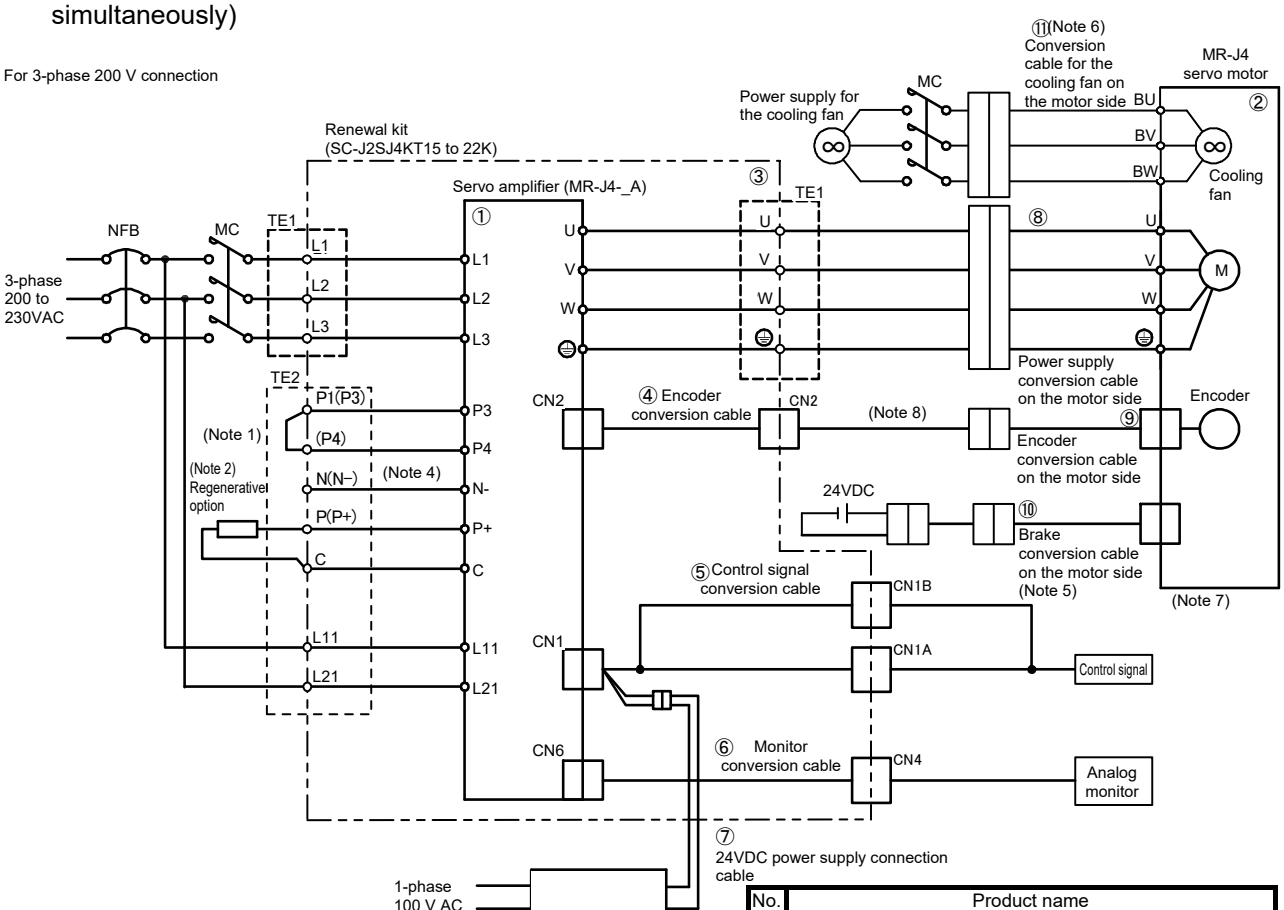

No.	Product name	
①	Servo amplifier	*1,2
②	Servo motor	*1
③	Renewal kit	
④	Encoder conversion cable	*2
⑤	Control signal conversion cable	*2
⑥	Monitor conversion cable	*2
⑦	24 V DC power supply connection cable	*2
⑧	Power supply conversion cable on the motor side	
⑨	Encoder conversion cable on the motor side	
⑩	Brake conversion cable on the motor side	
⑪	Conversion cable for the cooling fan on the motor side	

*1: Manufactured by Mitsubishi Electric.

*2: For secondary replacement, replacement finished through the primary replacement

Note 1. Make sure to connect between P3 and P4. When using the power factor improving DC reactor, remove the short circuit bar between P3 and P4 before connection.

2. When using the regenerative option, make sure to mount the regenerative option between P+ and C. Ensure the connection destinations are correct. If the connection destinations are incorrect, the servo amplifier may malfunction

3. Required only when the internal power supply (24 V DC) for the I/F is used in the existing MR-J2S-_A_ servo amplifier. Not included with the renewal tool. Note that a separate 24 V DC power supply (current capacity: 80 mA or more) is required when replacing.
When connecting the 24 V DC power supply, use the "24 V DC power supply connection cable (model: SC-J2SJ4CTPWC5M)" included in the package.
(Electric wire colors: Red (+ side); white (- side))

4. When connecting a power regenerative converter (FR-RC-_K) and a brake unit (FR-BU2-_K), connect between P+ and N-. Make sure to remove the built-in regenerative resistor or the regenerative option.

5. Unnecessary if electromagnetic brakes are not installed.

6. Required for the HG-JR22K1M motor only. There is no cooling fan for the HG-JR11K1M or HG-JR15K1M motor. Because the existing wiring becomes unnecessary, insulate as needed.

7. There is no cooling fan for the HG-JR11K1M or HG-JR15K1M motor. Because the existing wiring will become unnecessary, terminate the cables.

8. After replacing with the HG-JR22K1M, HG-JR30K1M. HG-JR37K1M, HG-JR45K1M or HG-JR55K1M motor, a new encoder cable is required to be laid. Contact Mitsubishi Electric System & Service Co., Ltd. if a new cable required.
* When using an existing encoder cable, an alarm No. AL 46.3 (thermistor disconnected error) occurs.

5.5 SC-J2SBJ4KT02K to 3K

(1) Primary replacement (when replacing the servo amplifier only)

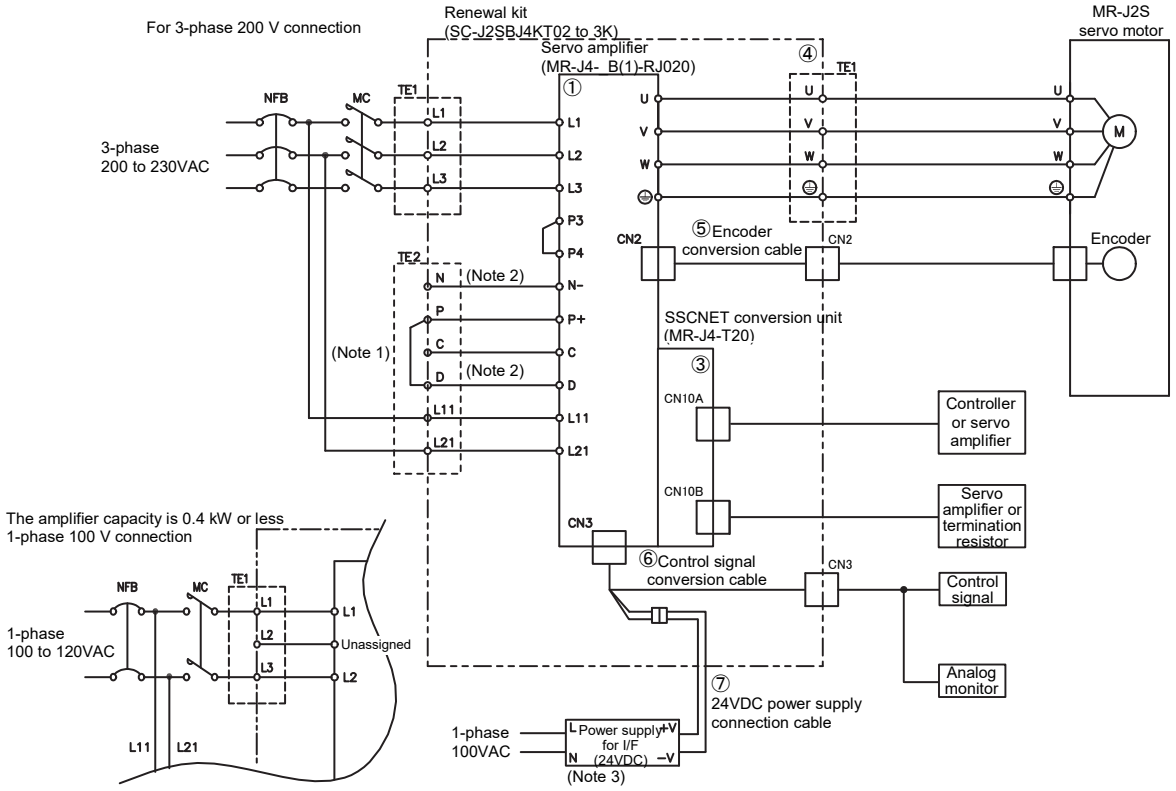

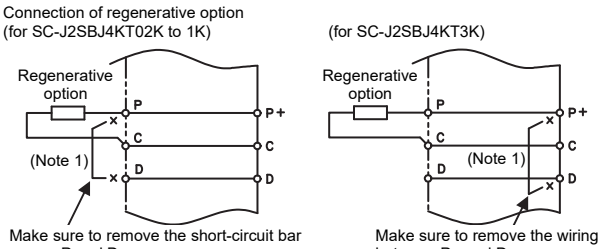

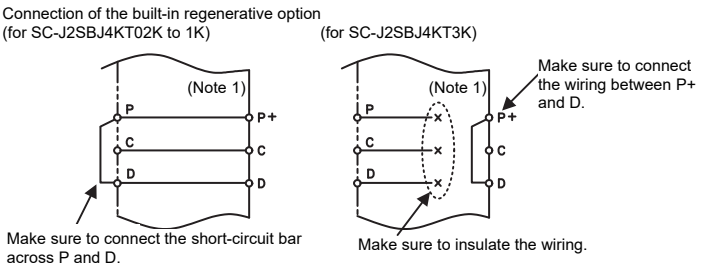

Note 1. When using the regenerative option, make sure to remove the wiring or the short-circuit bar across P (+) and D, connect with the wiring between the renewal kit and the servo amplifier, and mount the regenerative option between P and C.
When using a built-in regenerative resistor, make sure to connect the wiring or the short-circuit bar across P (+) and D. For SC-J2SBJ4KT3K, insulate the wiring between the renewal kit and the servo amplifier. Ensure the connection destinations are correct. The servo amplifier may malfunction if the connection destinations are incorrect.

2. The N terminal of TE2 is limited to SC-J2SBJ4KT1K and 3K. There is no D terminal wiring for SC-J2SBJ4KT3K.

3. Required only when the internal power supply (24 V DC) for the I/F is used in the existing MR-J2S-_B servo amplifier.
Not included with the renewal tool. Note that a separate 24 V DC power supply (current capacity: 80 mA or more) is required when replacing.
When connecting the 24 V DC power supply, use the "24 V DC power supply connection cable (model: SC-J2SJ4CTPWC5M)" included in the package. (Electric wire colors: Red (+ side); white (- side))

(2) Secondary replacement (when replacing the servo motor after replacing the servo amplifier)/Simultaneous replacement (when replacing the servo amplifier and the servo motor simultaneously)

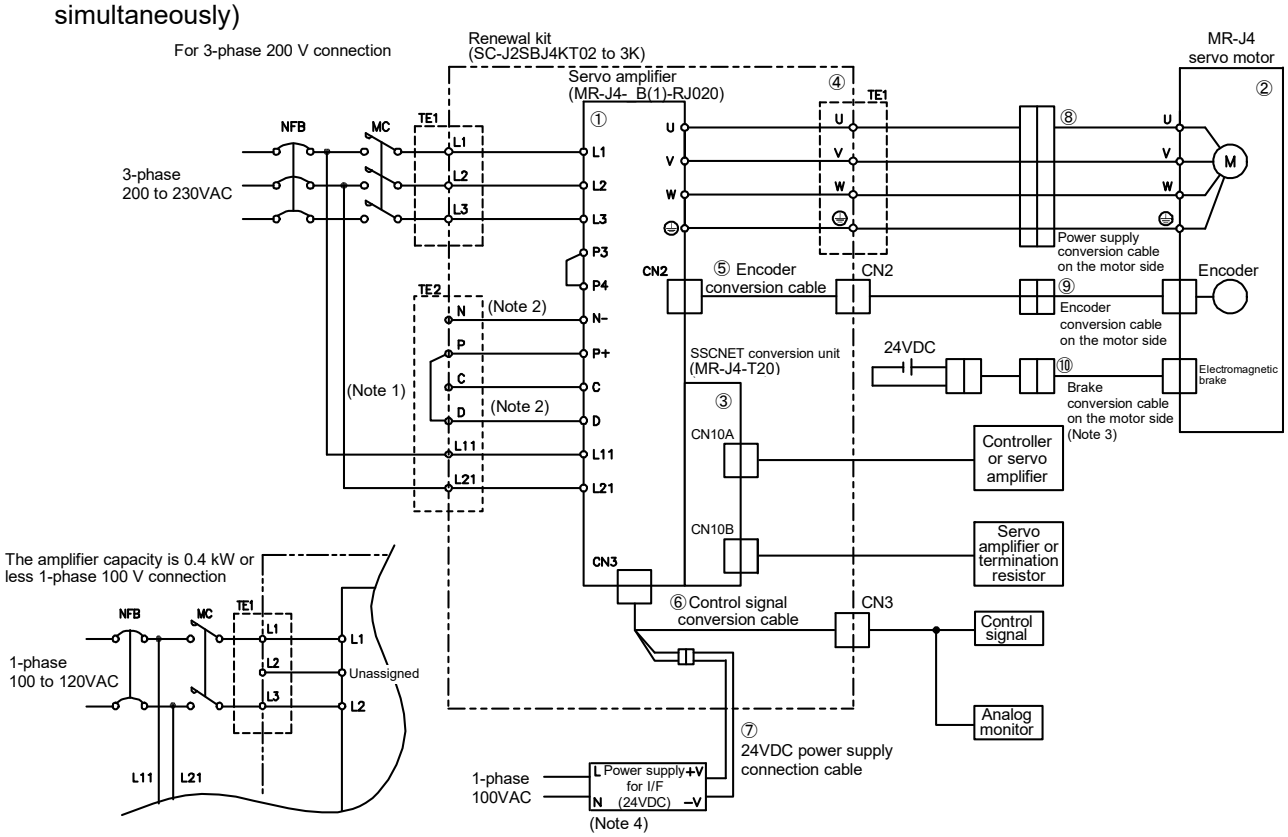

No.	Product name	
①	Servo amplifier	*1,2
②	Servo motor	*1
③	SSCNET conversion unit	*1,2
④	Renewal kit	*2
⑤	Encoder conversion cable	*2
⑥	Control signal conversion cable	*2
⑦	24 V DC power supply connection cable	*2
⑧	Power supply conversion cable on the motor side	
⑨	Encoder conversion cable on the motor side	
⑩	Brake conversion cable on the motor side	

*1: Manufactured by Mitsubishi Electric.

*2: For secondary replacement, replacement finished through the primary replacement

Connection of regenerative option
(for SC-J2SBJ4KT02K to 1K)

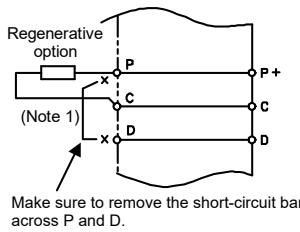

(for SC-J2SBJ4KT3K)

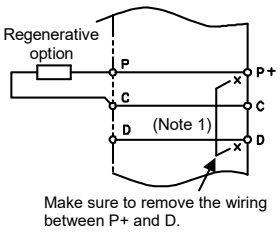

Connection of the built-in regenerative option
(for SC-J2SBJ4KT02K to 1K)

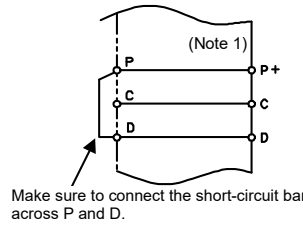

(for SC-J2SBJ4KT3K)

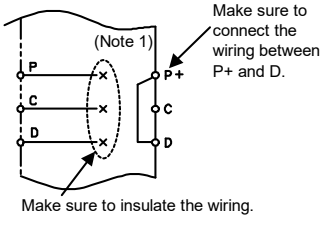

Note 1. When using the regenerative option, make sure to remove the wiring or the short-circuit bar across P (+) and D, connect with the wiring between the renewal kit and the servo amplifier, and mount the regenerative option between P and C.
When using a built-in regenerative resistor, make sure to connect the wiring or the short-circuit bar across P (+) and D. For SC-J2SBJ4KT3K, insulate the wiring between the renewal kit and the servo amplifier. Ensure the connection destinations are correct. The servo amplifier may malfunction if the connection destinations are incorrect.

2. The N terminal of TE2 is limited to SC-J2SBJ4KT1K and 3K. There is no D terminal wiring for SC-J2SBJ4KT3K.

3. Unnecessary if electromagnetic brakes are not installed.

4. Required only when the internal power supply (24 V DC) for the I/F is used in the existing MR-J2S-_B servo amplifier.
Not included with the renewal tool. Note that a separate 24 V DC power supply (current capacity: 80 mA or more) is required when replacing.
When connecting the 24 V DC power supply, use the "24 V DC power supply connection cable (model: SC-J2SJ4CTPWC5M)" included in the package. (Electric wire colors: Red (+ side); white (- side))

5.6 SC-J2SBJ4KT5K

(1) Primary replacement (when replacing the servo amplifier only)

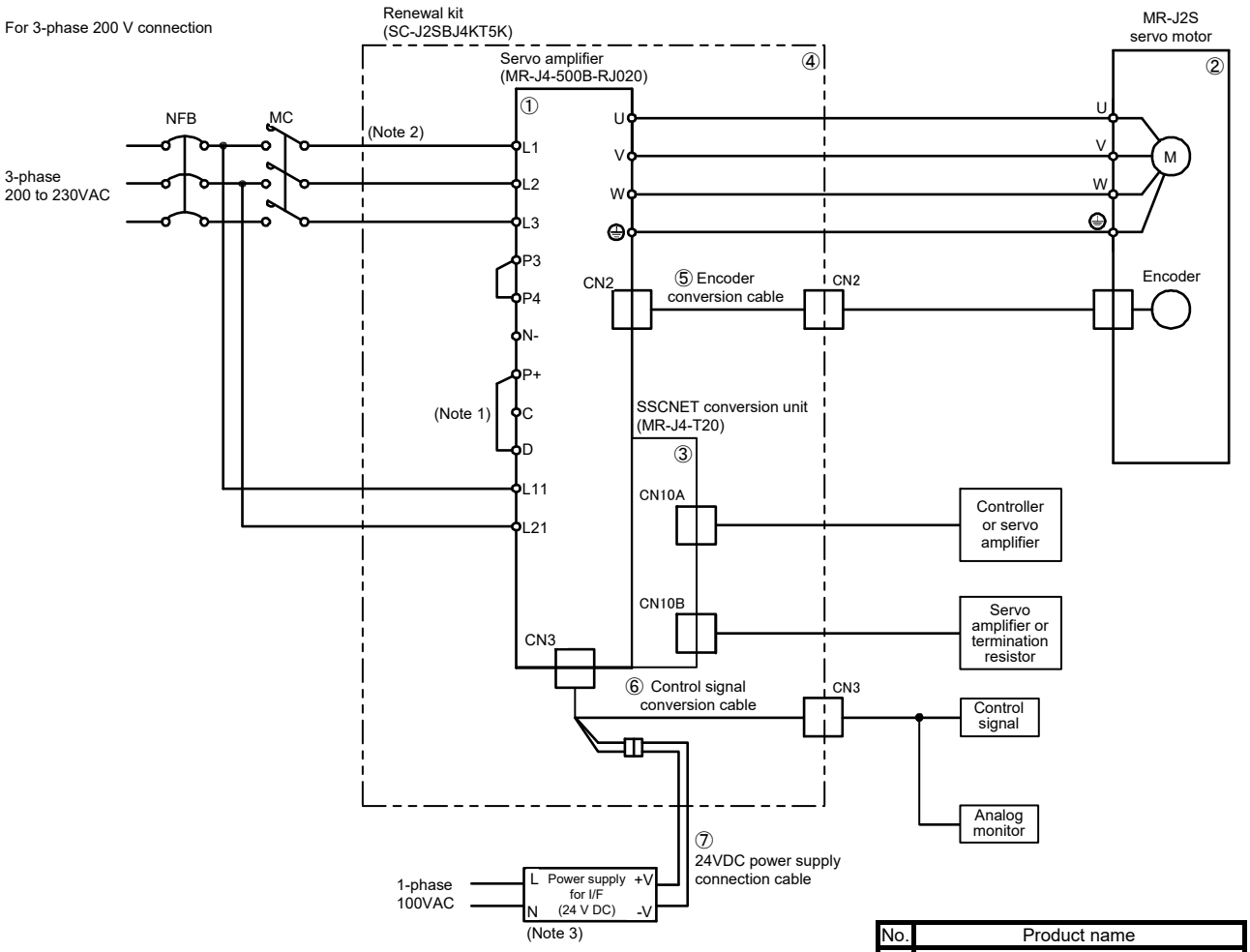

No.	Product name	
①	Servo amplifier	*1
②	Servo motor	*1
③	SSCNET conversion unit	*1
④	Renewal kit	
⑤	Encoder conversion cable	
⑥	Control signal conversion cable	
⑦	24 V DC power supply connection cable	

*1: Manufactured by Mitsubishi Electric.

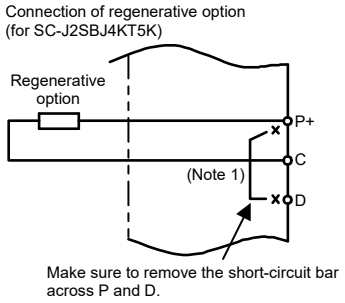

Note 1. When using the regenerative option, make sure to remove the short-circuit bar between P+ and D, connect with the wiring between the renewal kit and the servo amplifier, and mount the regenerative option between P+ and C. Ensure the connection destinations are correct. The servo amplifier may malfunction if the connection destinations are incorrect.

2. There is no conversion terminal block in the SC-J2SBJ4KT5K renewal kit. Directly connect to the MR-J4 servo amplifier.

3. Required only when the internal power supply (24 V DC) for the I/F is used in the existing MR-J2S-_B servo amplifier.
Not included with the renewal tool. Note that a separate 24 V DC power supply (current capacity: 80 mA or more) is required when replacing.
When connecting the 24 V DC power supply, use the "24 V DC power supply connection cable (model: SC-J2SJ4CTPWC5M)" included in the package. (Electric wire colors: Red (+ side); white (- side))

(2) Secondary replacement (when replacing the servo motor after replacing the servo amplifier)/Simultaneous replacement (when replacing the servo amplifier and the servo motor simultaneously)

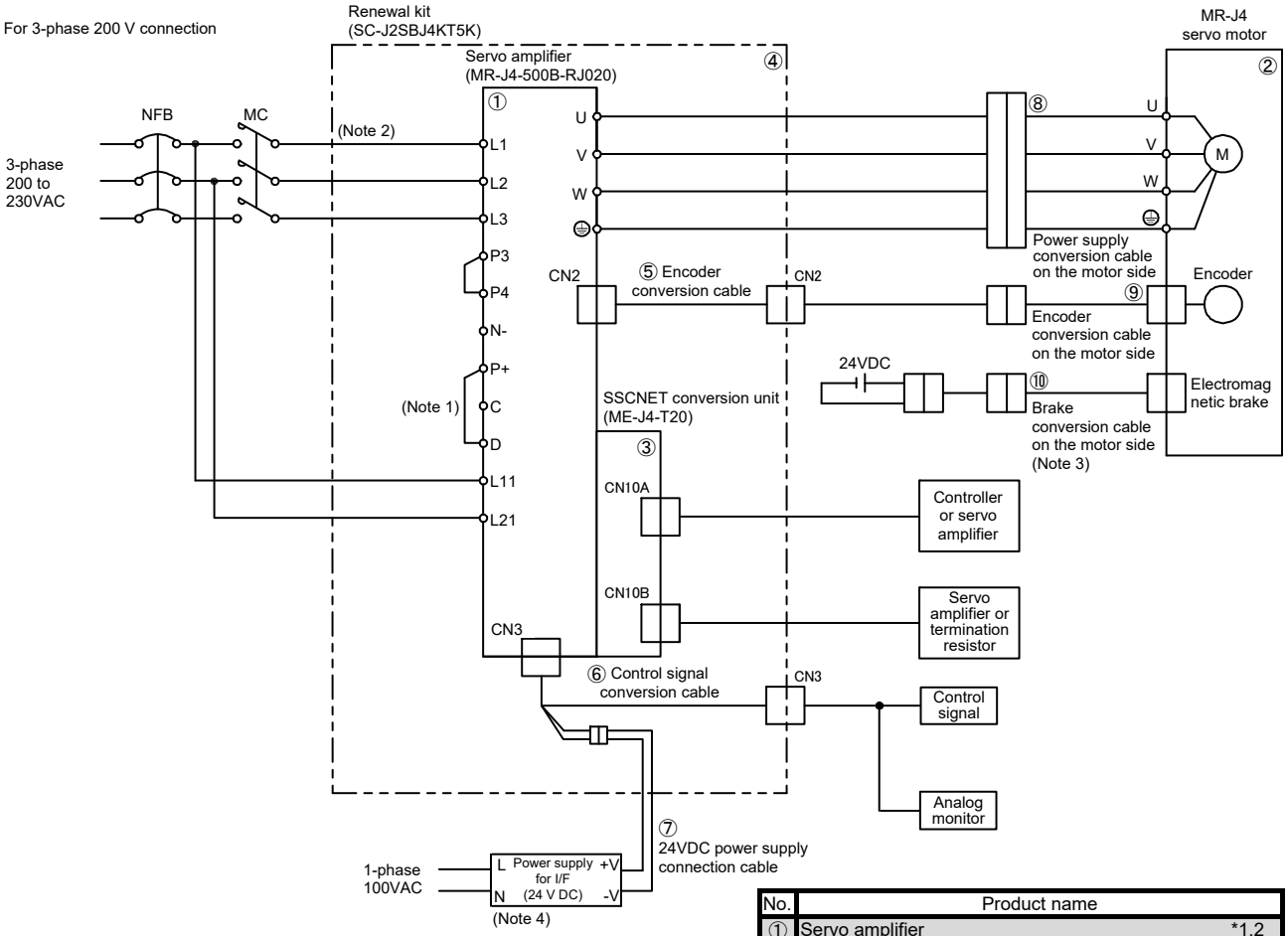

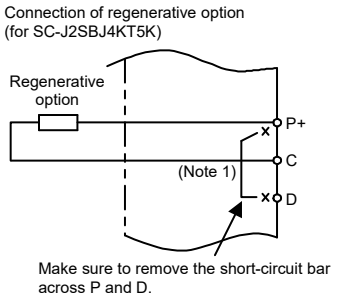

No.	Product name	
①	Servo amplifier	*1,2
②	Servo motor	*1
③	SSCNET conversion unit	*1,2
④	Renewal kit	*2
⑤	Encoder conversion cable	*2
⑥	Control signal conversion cable	*2
⑦	24 V DC power supply connection cable	*2
⑧	Power supply conversion cable on the motor side	
⑨	Encoder conversion cable on the motor side	
⑩	Brake conversion cable on the motor side	

*1: Manufactured by Mitsubishi Electric.

*2: For secondary replacement, replacement finished through the primary replacement

Note 1. When using the regenerative option, make sure to remove the short-circuit bar between P+ and D, connect with the wiring between the renewal kit and the servo amplifier, and mount the regenerative option between P+ and C. Ensure the connection destinations are correct. The servo amplifier may malfunction if the connection destinations are incorrect.

2. There is no conversion terminal block in the SC-J2SBJ4KT5K renewal kit. Directly connect to the MR-J4 servo amplifier.

3. Unnecessary if electromagnetic brakes are not installed.

4. Required only when the internal power supply (24 V DC) for the I/F is used in the existing MR-J2S-_B servo amplifier.
Not included with the renewal tool. Note that a separate 24 V DC power supply (current capacity: 80 mA or more) is required when replacing.
When connecting the 24 V DC power supply, use the "24 V DC power supply connection cable (model: SC-J2SJ4CTPWC5M)" included in the package. (Electric wire colors: Red (+ side); white (- side))

5.7 SC-J2SBJ4KT7K

(1) Primary replacement (when replacing the servo amplifier only)

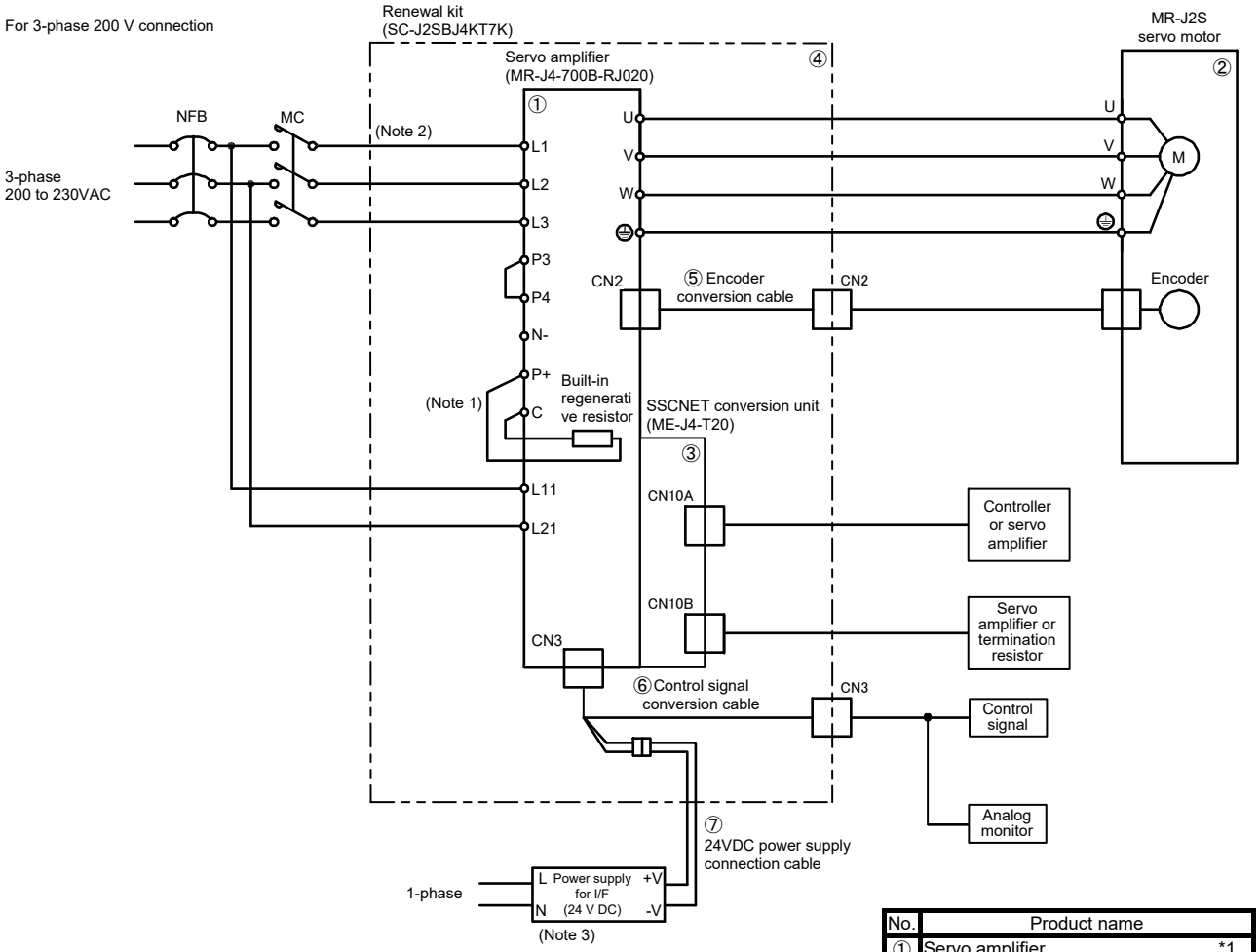

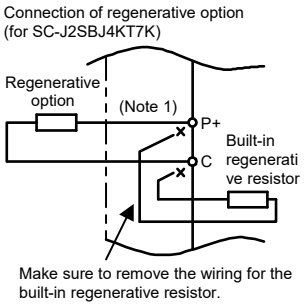

No.	Product name	
①	Servo amplifier	*1
②	Servo motor	*1
③	SSCNET conversion unit	*1
④	Renewal kit	
⑤	Encoder conversion cable	
⑥	Control signal conversion cable	
⑦	24 V DC power supply connection cable	

*1: Manufactured by Mitsubishi Electric.

Note 1. When using the regenerative option, make sure to remove the wiring for the regenerative resistor built in to the servo amplifier, and mount the regenerative option between P+ and C. Ensure the connection destinations are correct. The servo amplifier may malfunction if the connection destinations are incorrect.

2. There is no conversion terminal block in the SC-J2SBJ4KT7K renewal kit. Directly connect to the MR-J4 servo amplifier.

3. Required only when the internal power supply (24 V DC) for the I/F is used in the existing MR-J2S-_B servo amplifier.
Not included with the renewal tool. Note that a separate 24 V DC power supply (current capacity: 80 mA or more) is required when replacing.
When connecting the 24 V DC power supply, use the "24 V DC power supply connection cable (model: SC-J2SJ4CTPWC5M)" included in the package. (Electric wire colors: Red (+ side); white (- side))

(2) Secondary replacement (when replacing the servo motor after replacing the servo amplifier)/Simultaneous replacement (when replacing the servo amplifier and the servo motor simultaneously)

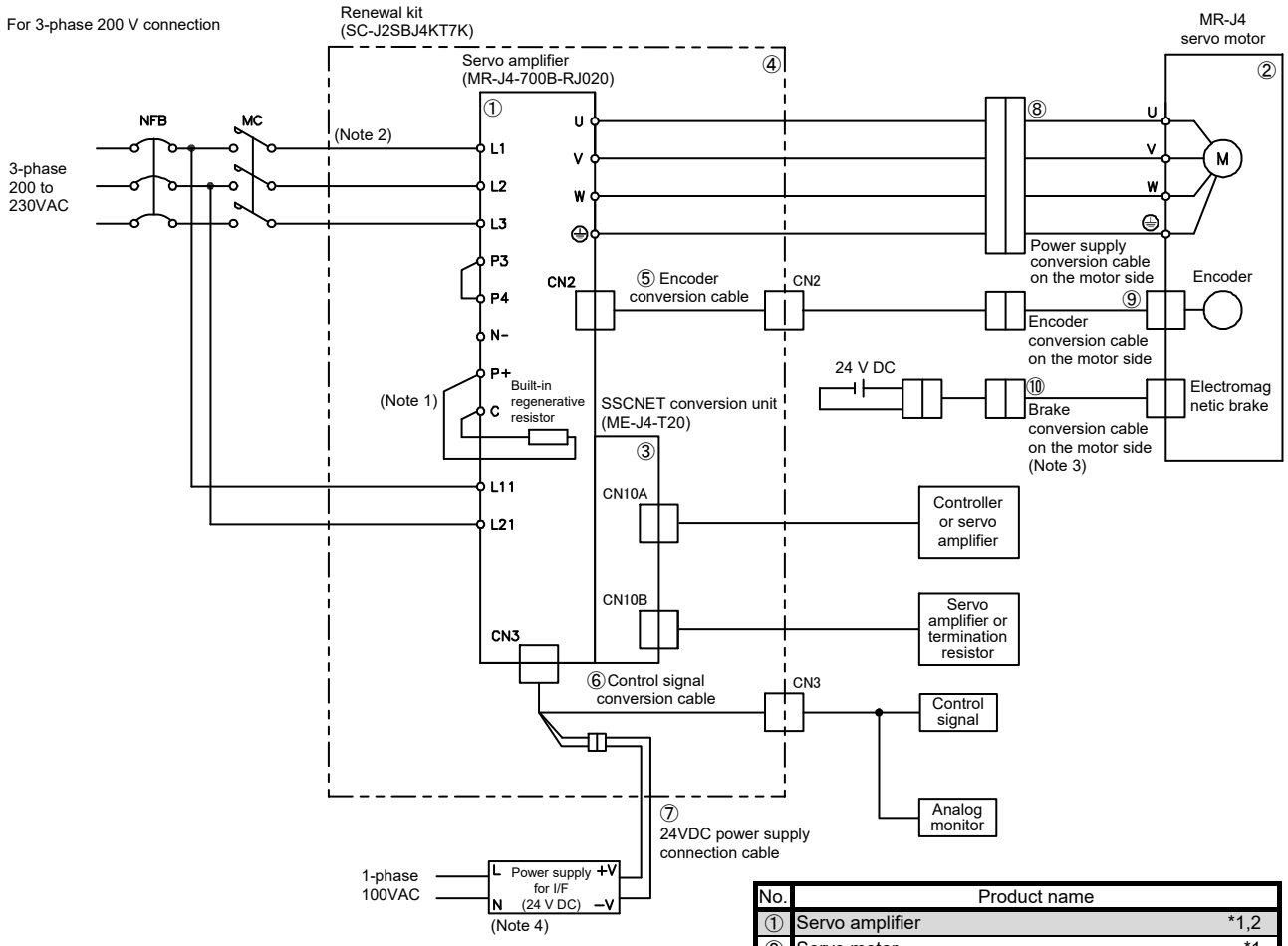

Connection of regenerative option
(for SC-J2SBJ4KT7K)

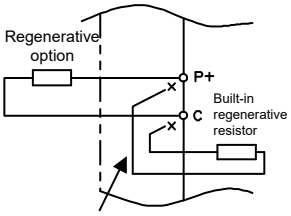

Make sure to remove the wiring for the built-in regenerative resistor.

No.	Product name	
①	Servo amplifier	*1,2
②	Servo motor	*1
③	SSCNET conversion unit	*1,2
④	Renewal kit	*2
⑤	Encoder conversion cable	*2
⑥	Control signal conversion cable	*2
⑦	24 V DC power supply connection cable	*2
⑧	Power supply conversion cable on the motor side	
⑨	Encoder conversion cable on the motor side	
⑩	Brake conversion cable on the motor side	

*1: Manufactured by Mitsubishi Electric.

*2: For secondary replacement, replacement finished through the primary replacement

Note 1. When using the regenerative option, make sure to remove the wiring for the regenerative resistor built in to the servo amplifier, and mount the regenerative option between P+ and C. Ensure the connection destinations are correct. The servo amplifier may malfunction if the connection destinations are incorrect.

2. There is no conversion terminal block in the SC-J2SBJ4KT7K renewal kit. Directly connect to the MR-J4 servo amplifier.

3. Unnecessary if electromagnetic brakes are not installed.

4. Required only when the internal power supply (24 V DC) for the I/F is used in the existing MR-J2S-_B servo amplifier.
Not included with the renewal tool. Note that a separate 24 V DC power supply (current capacity: 80 mA or more) is required when replacing.
When connecting the 24 V DC power supply, use the "24 V DC power supply connection cable (model: SC-J2SJ4CTPWC5M)" included in the package.
(Electric wire colors: Red (+ side); white (- side))

5.8 SC-J2SBJ4KT15K, 22K

(1) Primary replacement (when replacing the servo amplifier only)

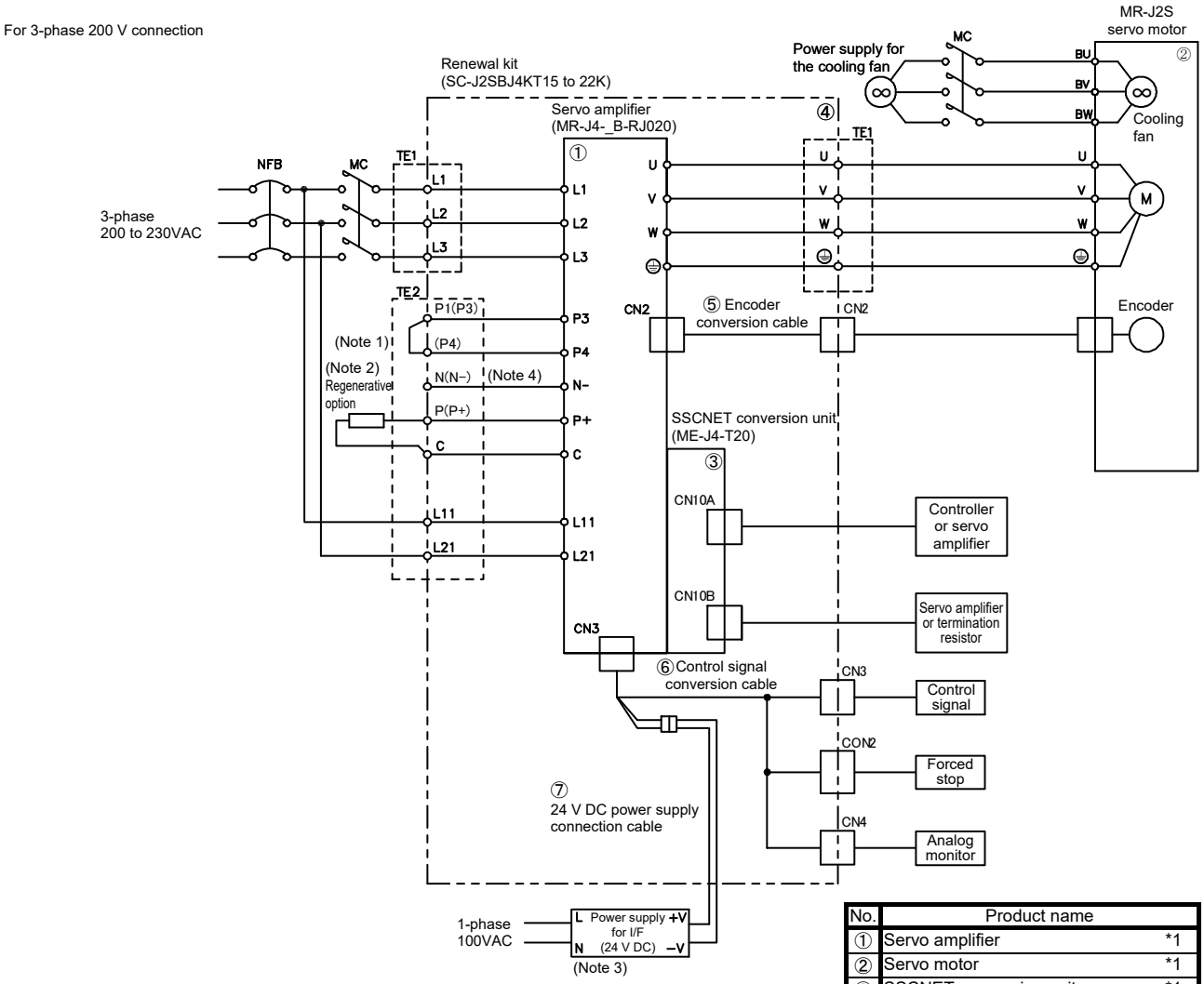

No.	Product name	
①	Servo amplifier	*1
②	Servo motor	*1
③	SSCNET conversion unit	*1
④	Renewal kit	
⑤	Encoder conversion cable	
⑥	Control signal conversion cable	
⑦	24 V DC power supply connection cable	

*1: Manufactured by Mitsubishi Electric.

Note 1. Make sure to connect between P3 and P4. When using the power factor improving DC reactor, remove the short circuit bar between P3 and P4 before connection.

2. When using the regenerative option, make sure to mount the regenerative option between P+ and C. Ensure the connection destinations are correct. The servo amplifier may malfunction if the connection destinations are incorrect.

3. Required only when the internal power supply (24 V DC) for the I/F is used in the existing MR-J2S-_B servo amplifier.
Not included with the renewal tool. Note that a separate 24 V DC power supply (current capacity: 80 mA or more) is required when replacing.
When connecting the 24 V DC power supply, use the "24 V DC power supply connection cable (model: SC-J2SJ4CTPWC5M)" included in the package.
(Electric wire colors: Red (+ side); white (- side))

4. When connecting a power regenerative converter (FR-RC-_K) and a brake unit (FR-BU2-_K), connect between P+ and N-. Make sure to remove the built-in regenerative resistor or the regenerative option.

(2) Secondary replacement (when replacing the servo motor after replacing the servo amplifier)/ Simultaneous replacement (when replacing the servo amplifier and the servo motor simultaneously)

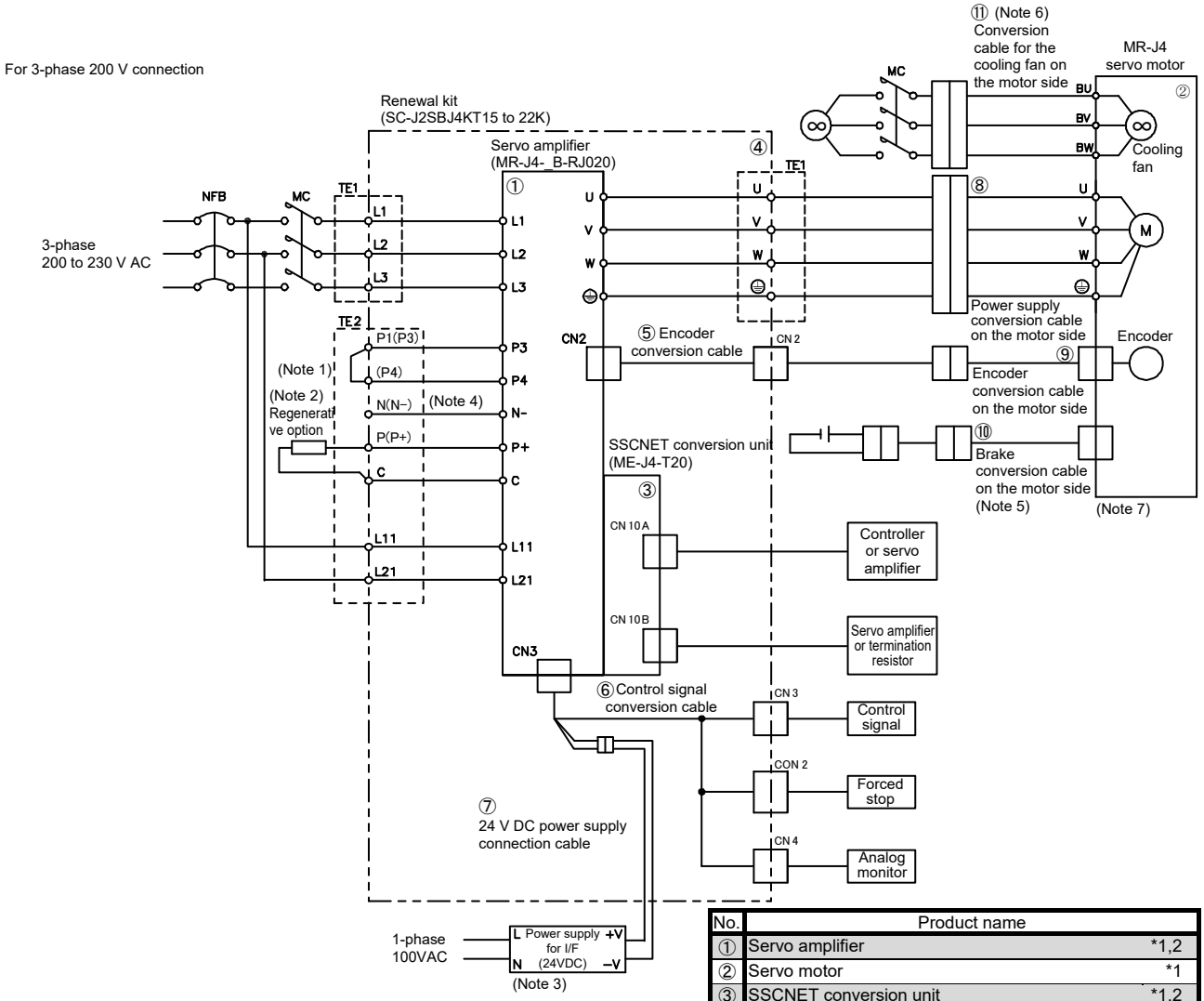

No.	Product name	
①	Servo amplifier	*1,2
②	Servo motor	*1
③	SSCNET conversion unit	*1,2
④	Renewal kit	*2
⑤	Encoder conversion cable	*2
⑥	Control signal conversion cable	*2
⑦	24 V DC power supply connection cable	*2
⑧	Power supply conversion cable on the motor side	
⑨	Encoder conversion cable on the motor side	
⑩	Brake conversion cable on the motor side	
⑪	Conversion cable for the cooling fan on the motor side	

*1: Manufactured by Mitsubishi Electric.

*2: For secondary replacement, replacement finished through the primary replacement

Note 1. Make sure to connect between P3 and P4. When using the power factor improving DC reactor, remove the short circuit bar between P3 and P4 before connection.

2. When using the regenerative option, make sure to mount the regenerative option between P+ and C. Ensure the connection destinations are correct. The servo amplifier may malfunction if the connection destinations are incorrect.

3. Required only when the internal power supply (24 V DC) for the I/F is used in the existing MR-J2S-_A servo amplifier. Not included with the renewal tool. Note that a separate 24 V DC power supply (current capacity: 80 mA or more) is required when replacing.
When connecting the 24 V DC power supply, use the "24 V DC power supply connection cable (model: SC-J2SJ4CTPWC5M)" included in the package.
(Electric wire colors: Red (+ side); white (- side))

4. When connecting a power regenerative converter (FR-RC-_K) and a brake unit (FR-BU2-_K), connect between P+ and N-. Make sure to remove the built-in regenerative resistor or the regenerative option.

5. Unnecessary if electromagnetic brakes are not installed.

6. Required for the HG-JR22K1M motor only. There is no cooling fan for the HG-JR11K1M or HG-JR15K1M motor. Because the existing wiring becomes unnecessary, insulate as needed.

7. There is no cooling fan for the HG-JR11K1M or HG-JR15K1M motor. Because the existing wiring will become unnecessary, terminate the cables.

8. After replacing with the HG-JR22K1M, HG-JR30K1M. HG-JR37K1M, HG-JR45K1M or HG-JR55K1M motor, a new encoder cable is required to be laid. Contact Mitsubishi Electric System & Service Co., Ltd. if a new cable required.
* When using an existing encoder cable, an alarm No. AL46.3 (thermistor disconnected error) occurs.

6. SPECIFICATIONS

6.1 Standard Specifications

(1) Renewal kit specifications

Item			Specifications
Power supply	Voltage/Frequency (Note)		1-phase 100 V AC to 120 V AC, 50/60 Hz. 3-phase 200 V AC to 240 V AC, 50/60 Hz.
	Permissible voltage fluctuation (Note)		1-phase 85 to 127 V 3-phase 170 V AC to 264 V AC.
	Permissible frequency fluctuation		Within ±5%.
Environment	Ambient temperature	Operation	0 to +55 °C (non-freezing).
		Storage	-20 to +65 °C (non-freezing).
	Ambient humidity	Operation	90% RH or less (non-condensing).
		Storage	
	Ambience		Indoors (no direct sunlight) and free from corrosive gas, flammable gas, oil mist, dust, and dirt
	Altitude		1000 m or less above sea level.
	Vibration		5.9 m/s^2 or less, 10 to 55 Hz (Each direction of X, Y, and Z).

Note: Exclude for 400 V, since a terminal block is not included with.

6.2 Terminal Block Specifications

(1) SC-J2SJ4KT02K, 06K SC-J2SBJ4KT02K, 06K SC-J2SCPJ4KT02K, 06K	(2) SC-J2SJ4KT1K SC-J2SBJ4KT1K SC-J2SCPJ4KT1K	(3) SC-J2SJ4KT3K SC-J2SBJ4KT3K SC-J2SCPJ4KT3K
TE1 L_1 L_2 L_3 U V W Terminal screw: M4 Tightening torque: 1.2 [N•m] TE2 D C P L_{21} L_{11} Plug-in connector type	TE1 L_1 L_2 L_3 U V W Terminal screw: M4 Tightening torque: 1.2 [N•m] TE2 D C P L_{21} L_{11} N Plug-in connector type	TE1 L_1 L_2 L_3 U V W Terminal screw: M4 Tightening torque: 1.2 [N•m] TE2 L_{11} L_{21} D P C N Terminal screw: M4 Tightening torque: 1.2 [N•m]

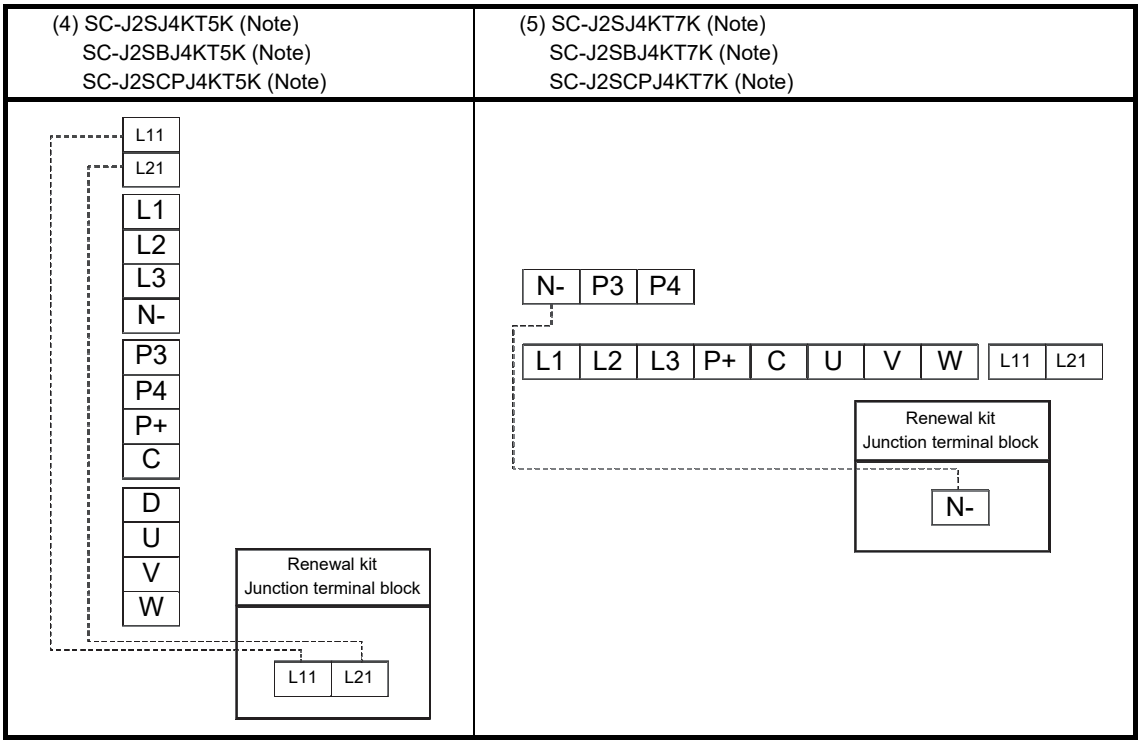

Note. There is no conversion terminal block for the MR-J2S-500_ and MR-J2S-700_ servo amplifier because the recommended wiring and screw sizes are the same as for the MR-J4 servo amplifier. Connect the existing wiring, except for the junction terminal block of the renewal kit mentioned above, directly to the MR-J4 servo amplifier.

(6) SC-J2SJ4KT15K (Note) SC-J2SBJ4KT15K (Note)	(7) SC-J2SJ4KT22K (Note) SC-J2SBJ4KT22K (Note)
TE1-1 L1 L2 L3 U V W Terminal screw: M6 Tightening torque: 3.0 [N•m] TE1-2 $P_1(P_3)$ (P_4) P(P+) C N(N-) Terminal screw: M6 Tightening torque: 3.0 [N•m] TE2 L_{11} L_{21} Terminal screw: M4 Tightening torque: 1.2 [N•m] PE Terminal screw: M6 Tightening torque: 3.0 [N•m]	TE1-1 L1 L2 L3 U V W Terminal screw: M8 Tightening torque: 6.0 [N•m] TE1-2 $P_1(P_3)$ (P_4) P(P+) C N(N-) Terminal screw: M8 Tightening torque: 6.0 [N•m] TE2 L_{11} L_{21} Terminal screw: M4 Tightening torque: 1.2 [N•m] PE Terminal screw: M8 Tightening torque: 6.0 [N•m]

Note. The renewal kits for the MR-J2S-11K_, MR-J2S-15K_ and MR-J2S-22K_ servo amplifiers have a different terminal position than the MR-J2S servo amplifier.

6.3 Recommended 24 V DC Power Supply Specifications for Interface

These are the recommended specifications for a 24 V DC power source for interface that is required for renewal.

Make a selection according to the following specifications.

Product name	Specifications
For interface 24 V DC power	24 V DC ±10% Power capacity: 80 mA or more

7. PARAMETER SETTING

7.1 List of General-Purpose Interface Setting Requisite Parameters

(1) For primary replacement

The following parameters are a minimum number of parameters that need to be set for primary replacement. Depending on the settings of the currently used servo amplifier, parameters other than these may need to be set. For details, **refer to Part 2 Section 3.6**.

Parameter number	Setting item	Setting value	Description
Changing required.			
PA04	Function selection A-1	0000h	Forced stop deceleration function selection To configure the same settings as those for MR-J2S, select "Forced stop deceleration function disabled (EM1)".
PC22	Function selection C-1	_ 1 _ _ h	Serial encoder selection. This setting is for communication with the encoder of MR-J2S. An incorrect setting causes encoder initial communication data error 1 (AL.20.1).
PA09	Auto Tuning Response	8	Auto tuning response setting When replacing, switch the power on after setting the parameter value to "8". * **It is necessary to make gain adjustment again when replacing.** The setting value of this parameter is equivalent to the slow response of the MR-J2S. Perform adjustment since tha gain can be too low for the slow response. For details on how to make gain adjustments, refer to Chapter 6 of the MR-J4 Servo Amplifier Instruction Manual.
PD27	Output device selection 2 * **11 kW or more, only when using this function**	0006h	Dynamic brake interlock (DB) selection) When using this function for the MR-J2S servo amplifier of 11 kW or more, set the parameter. Assign a DB signal to pin CN1-48.
PD03 to PD14	Input signal device selection	-	When the assignment of the Input/output signal for the existing MR-J2S servo amplifier is changed, setting is required. For details, refer to Section 5.2 in "Manual for Replacement from MR-J2S Renewal Tool (X903120707)" issued by Mitsubishi Electric System & Service Co., Ltd.
Position control mode only			
PA06	Electronic gear numerator (CMX) (Command input pulse multiplication numerator)	8 (Note 1)	When using an electronic gear, it is necessary to change the setting value. **Set the same value as [Pr. 3] or [Pr. 4] of for the MR-J2S- A servo amplifier.**
PA07	Electronic gear denominator (CDV) (Commanded pulse multiplication denominator)	1 (Note 1)	
PA21	Electronic gear selection	0001h	A setting value for the electronic gear [Pr. PA06] or [Pr. PA07] becomes effective.
PA13	Command pulse input form	_ 2 _ _ h	Pulse train filter selection The setting value mentioned at the left side is a command pulse train filter setting equivalent to the MR-J2S-_A_ (when setting the differential line driver type). * **If it is not set, position mismatch will occur. Make sure to set a filter.** In addition, it is necessary to adjust the command pulse logic to the positioning module. For details, refer to Part 2 Section 3.7. * **An incorrect logic setting causes the servo motor to not rotate. Make sure to configure the settings.**
PA10	In-position range	100 (Note 2)	In-position range Used to set an in-position range per command pulse unit. **Set the same value as [Pr. 5] of for the MR-J2S- A servo amplifier.**
Speed control mode only			
PA01	Control mode	_ _ _ 2h	Select the servo amplifier control mode. Select the speed control mode.
PC12	Analog speed command - Maximum speed	3000 (Note 3)	Analog speed command - Maximum speed

Note 1. The example value shown is for when the electronic gear setting of an existing servo amplifier is set as "8/1".
2. The example value shown is for when the in-position range of an existing servo amplifier is set as "100".
3. The example value shown is for when the servo amplifier setting of an existing servo amplifier is set as "3000".

(2) For secondary replacement

The following parameters are a minimum number of parameters that need to be set for secondary replacement. Depending on the settings of the currently used servo amplifier, parameters other than these may need to be set. For details, **refer to Part 2 Section 3.6**.

Parameter number	Setting item	Setting value		Description
		Before changing (Note 1)	After changing	
Changing required.				
PC22	Function selection C-1	_ 1 _ _ h	_ 0 _ _ h	Serial encoder selection. This setting is for communication with the encoder of MR-J4. An incorrect setting causes encoder initial communication data error 1 (AL.20.1).
Position control mode only				
PA21	Electronic gear selection	0001h	3001h	J2S electronic gear setting value compatibility mode * **For [Pr. PA06] or [Pr. PA07], the value when performing the primary replacement is required to be maintained.** Magnify the electronic gear setting value by 32 times.
Speed control mode only				
PC12	Analog speed command - Maximum speed	0	3000	Analog speed command - Maximum speed The setting value at left is for when the HC-SFS53 motor is replaced with the HG-SR52 motor.
Torque control mode only				
PC12	Analog speed limit - Maximum speed	0	3000	Analog speed limit - Maximum speed The setting value at left is for when the HC-SFS53 motor is replaced with the HG-SR52 motor.
When using encoder output pulses				
PA15	Encoder output pulses	4 (Note 3)	128	Used to set the encoder pulses (A-phase and B-phase) output by the servo amplifier. An output pulse is required to be set.
PC19	Encoder output pulse setting selection	0 _ 1 _ h (Note 3)	1 _ 1 _ h	Encoder output pulse setting selection Used to set the encoder pulses output by the servo amplifier. The setting value at left is according to the dividing ratio setting.

Note 1. Setting example at primary replacement.

2. The value is for when the electronic gear setting of an existing servo motor (encoder resolution: 131072 pulses/rev) is "8/1".

3. The value is for when the output pulse setting of an existing HC-KFS motor (encoder resolution: 131072 pulses/rev) is "Dividing ratio: 1/4".

(3) For simultaneous replacement

The following parameters are a minimum number of parameters that need to be set for simultaneous replacement. Depending on the settings of the currently used servo amplifier, parameters other than these may need to be set. For details, **refer to Part 2 Section 3.6**.

Parameter number	Setting item	Setting value	Description
Changing required.			
PA04	Function selection A-1	0000h	Forced stop deceleration function selection To configure the same settings as those for MR-J2S, select "Forced stop deceleration function disabled (EM1)".
PA09	Auto Tuning Response	8	Auto tuning response setting When replacing, switch the power on after setting the parameter value to "8". * **It is necessary to make gain adjustment again when replacing.** The setting value of this parameter is equivalent to the slow response of the MR-J2S. Perform adjustment since tha gain can be too low for the slow response. For details on how to make gain adjustments, refer to Chapter 6 of the MR-J4 Servo Amplifier Instruction Manual.
PD27	Output device selection 2 *** 11 kW or more, only when using this function**	0006h	Dynamic brake interlock (DB) selection) When using this function for the MR-J2S servo amplifier of 11 kW or more, set the parameter. Assign a DB signal to pin CN1-48.
PD03 to 14	Input signal device selection	-	When the assignment of the Input/output signal for the existing MR-J2S servo amplifier, setting is required. For details, refer to Part 2 Section 3.6.
Position control mode only			
PA06	Electronic gear numerator (CMX) (Command input pulse multiplication numerator)	8 (Note 1)	When using an electronic gear, it is necessary to change the setting value. **Set the same value as [Pr. 3] or [Pr. 4] of for the MR-J2S- A servo amplifier.**
PA07	Electronic gear denominator (CDV) (Commanded pulse multiplication denominator)	1 (Note 1)	
PA21	Electronic gear selection	3001h	J2S electronic gear setting value compatibility mode Magnify the electronic gear setting value by 32 times.
PA13	Command pulse input form	_ 2 _ _ h	Pulse train filter selection The setting value mentioned at the left side is a command pulse train filter setting equivalent to the MR-J2S-_A_ (when setting the differential line driver type). * **If it is not set, position mismatch will occur. Make sure to set a filter.** In addition, it is necessary to adjust the command pulse logic to the positioning module. For details, refer to Part 2 Section 3.7. * **An incorrect logic setting causes the servo motor to not rotate. Make sure to configure the settings.**
PA10	In-position range	100 (Note 2)	In-position range Used to set an in-position range per command pulse unit. **Set the value of [Pr. 5] for the MR-J2S- A servo amplifier in this parameter as well.**
Speed control mode only			
PA01	Control mode	_ _ _ 2h	Select the servo amplifier control mode. Select the speed control mode.
PC12	Analog speed command - Maximum speed	3000	Analog speed command - Maximum speed The setting value at left is for when the HC-SFS53 motor is replaced with the HG-SR52 motor.
Torque control mode only			
PA01	Control mode	_ _ _ 4h	Select the servo amplifier control mode. Select the torque control mode.
PC12	Analog speed limit - Maximum speed	3000	Analog speed limit - Maximum speed The setting value at left is for when the HC-SFS53 motor is replaced with the HG-SR52 motor.
PC13	Analog torque command maximum output	100	Analog torque command maximum output **Set the same value as for the MR-J2S- A servo amplifier.**
When using encoder output pulses			
PA15	Encoder output pulses	128 (Note 3)	Used to set the encoder pulses (A-phase and B-phase) output by the servo amplifier.
PC19	Encoder output pulse setting selection	0 _ 1 _ h (Note 3)	Encoder output pulse setting selection Used to set the encoder pulses output by the servo amplifier. The setting value at left is according to the dividing ratio setting.

Note 1. The example value shown is for when the electronic gear setting of an existing servo amplifier is set as "8/1".
2. The example value shown is for when the in-position range of an existing servo amplifier is set as "100".
3. The example value shown is for when the output pulse setting of an existing HC-KFS motor (encoder resolution: 131072 pulses/rev) is "Dividing ratio: 1/4".

7.2 List of SSCNET Interface Setting Requisite Parameters

POINT

- When the MR-J4-_B-RJ020 servo amplifier is combined with the MR-J4-T20 SSCNET conversion unit, the servo amplifier is recognized as MR-J2S by the controller. For parameters, changes to the program or the parameters are required as necessary.
  (For details, refer to "[Appendix 1] Summary of MR-J4_B_-RJ020 + MR-J4-T20" in this document.)
- For details on how to set parameters, refer to **Chapter 5 of the "MR-J4-_B_-RJ020 Servo Amplifier Instruction Manual (SH(NA)030124)"**.

7.3 List of Built-in Positioning Function Setting Requisite Parameters

(1) For primary replacement

The parameters shown below are a minimum number of parameters that need to be set for primary replacement. Depending on the settings of the currently used servo amplifier, parameters other than these may need to be set. For details, **refer to Part 4 Section 3.6**.

Parameter number	Setting item	Setting value	Description
Changing required.			
PA01	Control mode	_ _ _ 6h	Select the servo amplifier control mode. Select the positioning mode (point table method).
PA04	Function selection A-1	0000h	Forced stop deceleration function selection To configure the same settings as those for MR-J2S, select "Forced stop deceleration function disabled (EM1)".
PC22	Function selection C-1	_ 1 _ _ h	Serial encoder selection. This setting is for communication with the encoder of MR-J2S. An incorrect setting causes encoder initial communication data error 1 (AL.20.1).
PA09	Auto Tuning Response	8	Auto tuning response setting When replacing, switch the power on after setting the parameter value to "8". * **It is necessary to make gain adjustment again when replacing.** The setting value of this parameter is equivalent to the slow response of the MR-J2S. Perform adjustment since tha gain can be too low for the slow response. For details on how to make gain adjustments, refer to Chapter 6 of the MR-J4 Servo Amplifier Instruction Manual.
PA06	Electronic gear numerator (CMX) (Command input pulse multiplication numerator)	8 (Note 1)	When using an electronic gear, it is necessary to change the setting value. **Set the same value as [Pr. 4] and [Pr. 5] of for the MR-J2S-_CP_ servo amplifier.**
PA07	Electronic gear denominator (CDV) (Commanded pulse multiplication denominator)	1 (Note 1)	
PA21	Electronic gear selection	0001h	A setting value for the electronic gear [Pr. PA06] or [Pr. PA07] becomes effective.
PA10	In-position range	100 (Note 2)	In-position range Used to set an in-position range per command pulse unit. **Set the same value as [Pr. 6] of for the MR-J2S-_CP_ servo amplifier.**
PA15	Encoder output pulses	4 (Note 3)	Used to set the encoder pulses (A-phase and B-phase) output by the servo amplifier.
PC19	Encoder output pulse setting selection	0 _ 1 _ h (Note 3)	Encoder output pulse setting selection Used to set the encoder pulses output by the servo amplifier. The setting value at left is according to the dividing ratio setting.
PD01	Input signal automatic on selection	1_ _ _h	When the EMG signal of the existing MR-J2S-CP servo amplifier has not been assigned, enable automatic on of the forced stop signal after replacement. An incorrect setting causes Servo forced stop warning (AL. E6.1).
PD04 to 28	Input signal device selection	-	When the assignment of the Input/output signal for the existing MR-J2S servo amplifier, setting is required. For details, refer to Part 4 Section 3.6.

Note 1. The example value shown is for when the electronic gear setting of an existing servo amplifier is set as "8/1".
2. The example value shown is for when the in-position range of an existing servo amplifier is set as "100".
3. The example value shown is for when the output pulse setting of an existing HC-KFS motor (encoder resolution: 131072 pulses/rev) is "Dividing ratio: 1/4".

(2) For secondary replacement

The parameters shown in this section are a minimum number of parameters that need to be set for secondary replacement. Depending on the settings of the currently used servo amplifier, parameters other than these may need to be set. For details, **refer to Part 4 Section 3.6**.

Parameter number	Setting item	Setting value		Description
		Before changing (Note 1)	After changing	
Changing required.				
PC22	Function selection C-1	_ 1 _ _ h	_ 0 _ _ h	Serial encoder selection. This setting is for communication with the encoder of MR-J4. An incorrect setting causes encoder initial communication data error 1 (AL.20.1).
PA21	Electronic gear selection	0001h	3001h	J2S electronic gear setting value compatibility mode *** For [Pr. PA06] or [Pr. PA07], the value when performing the primary replacement is required to be maintained.** Magnify the electronic gear setting value by 32 times.
PA10	In-position range	100	3200	Set the range of droop pulses occurred when outputting a positioning completion signal (INP). **Set the value as magnified by 32 times of the parameter No. 6 for the MR-J2S-_CP_ servo amplifier.**
PA15	Encoder output pulses	4 (Note 3)	128	Used to set the encoder pulses (A-phase and B-phase) output by the servo amplifier. An output pulse is required to be set.
PC19	Encoder output pulse setting selection	0 _ 1 _ h (Note 3)	1 _ 1 _ h	Encoder output pulse setting selection Used to set the encoder pulses output by the servo amplifier. The setting value at left is according to the dividing ratio setting.

Note 1. Setting example at primary replacement.
2. The value is for when the electronic gear setting of an existing servo motor (encoder resolution: 131072 pulses/rev) is "8/1".
3. The example value shown is for when the output pulse setting of an existing HC-KFS motor (encoder resolution: 131072 pulses/rev) is "Dividing ratio: 1/4".

(3) For simultaneous replacement

The parameters shown below are a minimum number of parameters that need to be set for simultaneous replacement. Depending on the settings of the currently used servo amplifier, parameters other than these may need to be set. For details, **refer to Part 4 Section 3.6**.

Parameter number	Setting item	Setting value	Description
Changing required.			
PA01	Control mode	_ _ _ 6h	Select the servo amplifier control mode. Select the positioning mode (point table method).
PA04	Function selection A-1	0000h	Forced stop deceleration function selection To configure the same settings as those for MR-J2S, select "Forced stop deceleration function disabled (EM1)".
PA09	Auto Tuning Response	8	Auto tuning response setting When replacing, switch the power on after setting the parameter value to "8". * **It is necessary to make gain adjustment again when replacing.** The setting value of this parameter is equivalent to the slow response of the MR-J2S. Perform adjustment since tha gain can be too low for the slow response. For details on how to make gain adjustments, refer to Chapter 6 of the MR-J4-_A_ Servo Amplifier Instruction Manual.
PA06	Electronic gear numerator (CMX) (Command input pulse multiplication numerator)	8 (Note 1)	When using an electronic gear, it is necessary to change the setting value. **Set the same value as [Pr. 3] or [Pr. 4] of for the MR-J2S- A servo amplifier.**
PA07	Electronic gear denominator (CDV) (Commanded pulse multiplication denominator)	1 (Note 1)	
PA21	Electronic gear selection	3001h	J2S electronic gear setting value compatibility mode Magnify the electronic gear setting value by 32 times.
PA10	In-position range	3200 (Note 2)	In-position range Used to set an in-position range per command pulse unit. **Set the value of [Pr. 6] for the MR-J2S- CP servo amplifier in this parameter as well.**
PA15	Encoder output pulses	128 (Note 3)	Used to set the encoder pulses (A-phase and B-phase) output by the servo amplifier.
PC19	Encoder output pulse setting selection	0 _ 1 _ h (Note 3)	Encoder output pulse setting selection Used to set the encoder pulses output by the servo amplifier. The setting value at left is according to the dividing ratio setting.
PD01	Input signal automatic on selection	1_ _ _h	When the EMG signal of the existing MR-J2S-CP servo amplifier has not been assigned, enable automatic on of the forced stop signal after replacement. An incorrect setting causes Servo forced stop warning (AL. E6.1).

Note 1. The example value shown is for when the electronic gear setting of an existing servo amplifier is set as "8/1".
2. The example value shown is for when the in-position range of an existing servo amplifier is set as "100".
3. The example value shown is for when the output pulse setting of an existing HC-KFS motor (encoder resolution: 131072 pulses/rev) is "Dividing ratio: 1/4".

8. DIMENSIONS

8.1 Renewal Kit

The dimensions are the same for general-purpose interface, SSCNET interface, and built-in positioning function.

(1) SC-J2SJ4KT02K
SC-J2SBJ4KT02K
SC-J2SCPJ4KT02K

Unit [mm]

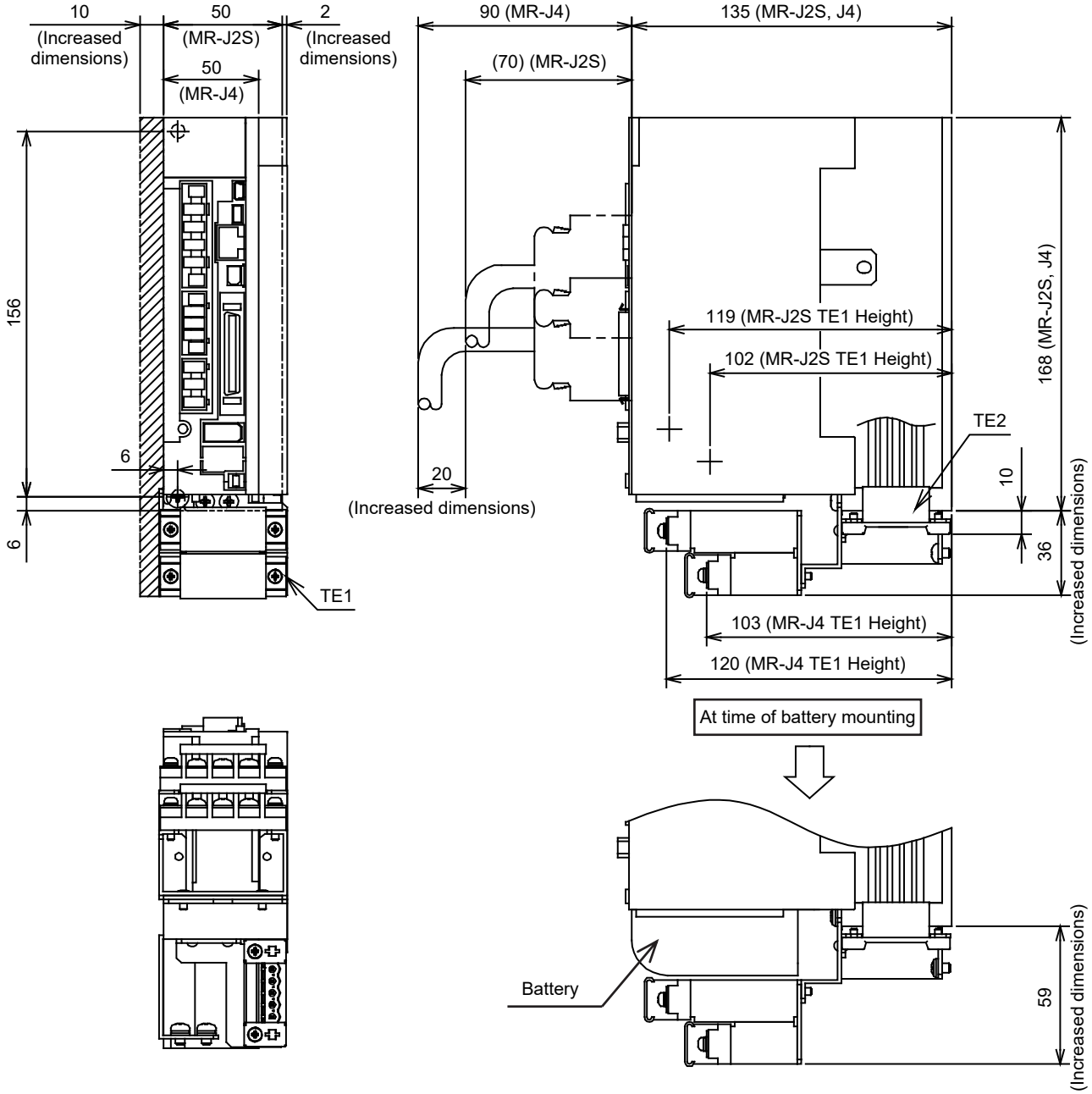

Note 1. The above dimensions are for when MR-BAT6V1SET has been mounted. Note that MR-BAT6V1BJ cannot be mounted.
2. Wiring and other items in the renewal kit are not drawn so that mounting method can be easily seen.

(2) SC-J2SJ4KT06K
SC-J2SBJ4KT06K
SC-J2SCPJ4KT06K

Unit [mm]

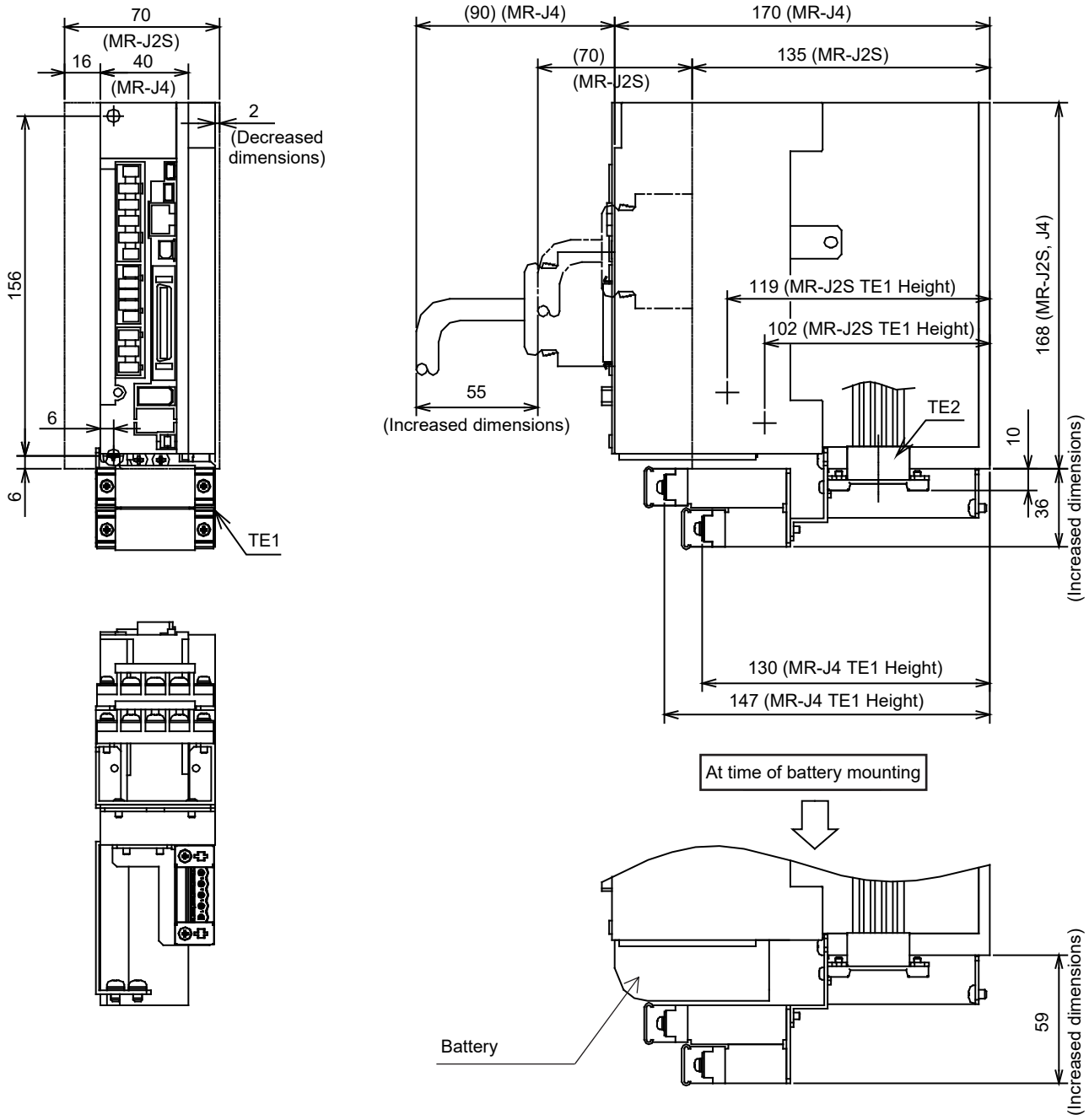

Note 1. The above dimensions are for when MR-BAT6V1SET has been mounted. Note that MR-BAT6V1BJ cannot be mounted.
2. Wiring and other items in the renewal kit are not drawn so that mounting method can be easily seen.

(3) SC-J2SJ4KT1K
SC-J2SBJ4KT1K
SC-J2SCPJ4KT1K

Unit [mm]

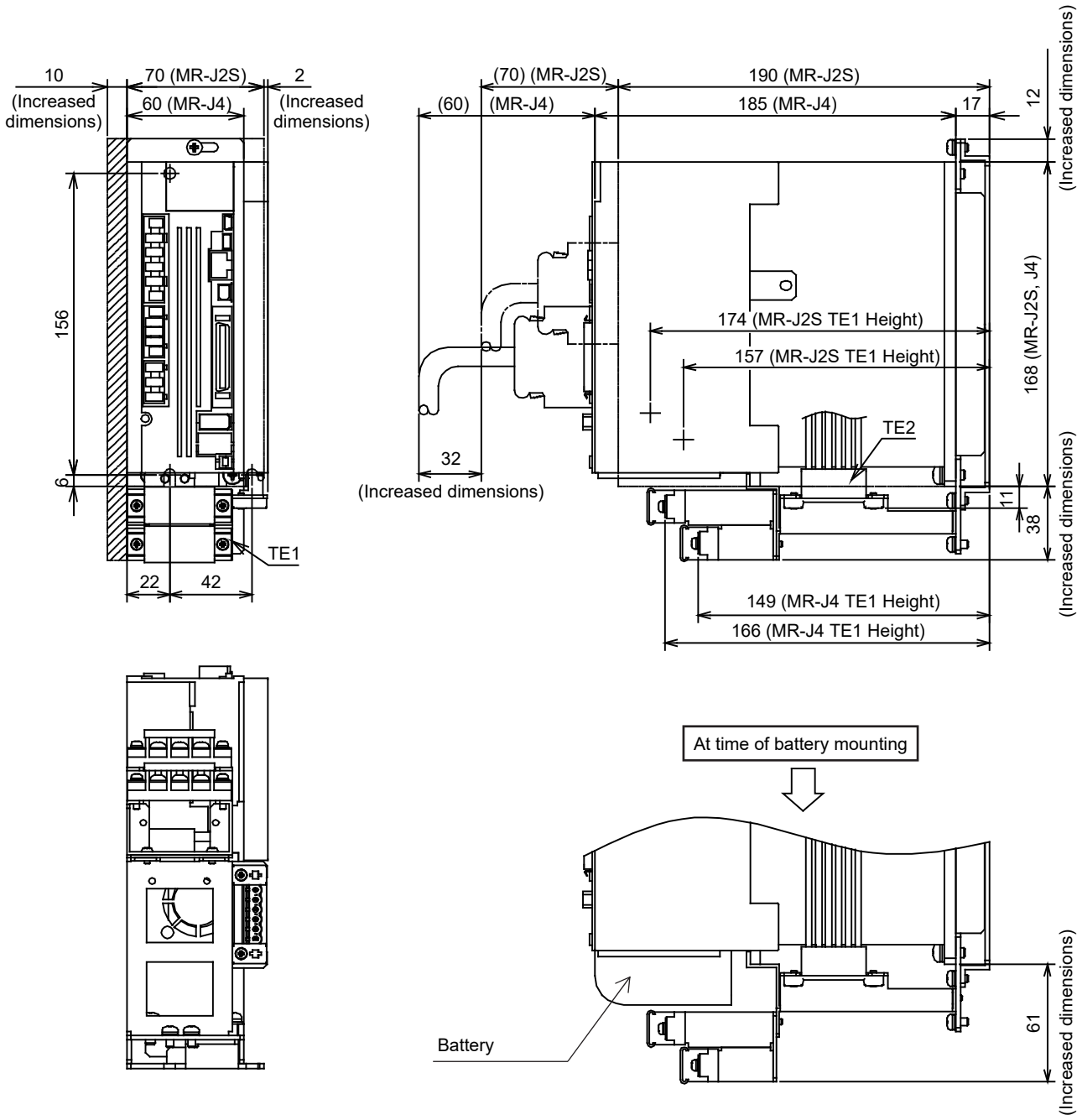

Note 1. The above dimensions are for when MR-BAT6V1SET has been mounted. Note that MR-BAT6V1BJ cannot be mounted.
2. Wiring and other items in the renewal kit are not drawn so that mounting method can be easily seen.

(4) SC-J2SJ4KT3K
SC-J2SBJ4KT3K
SC-J2SCPJ4KT3K

Unit [mm]

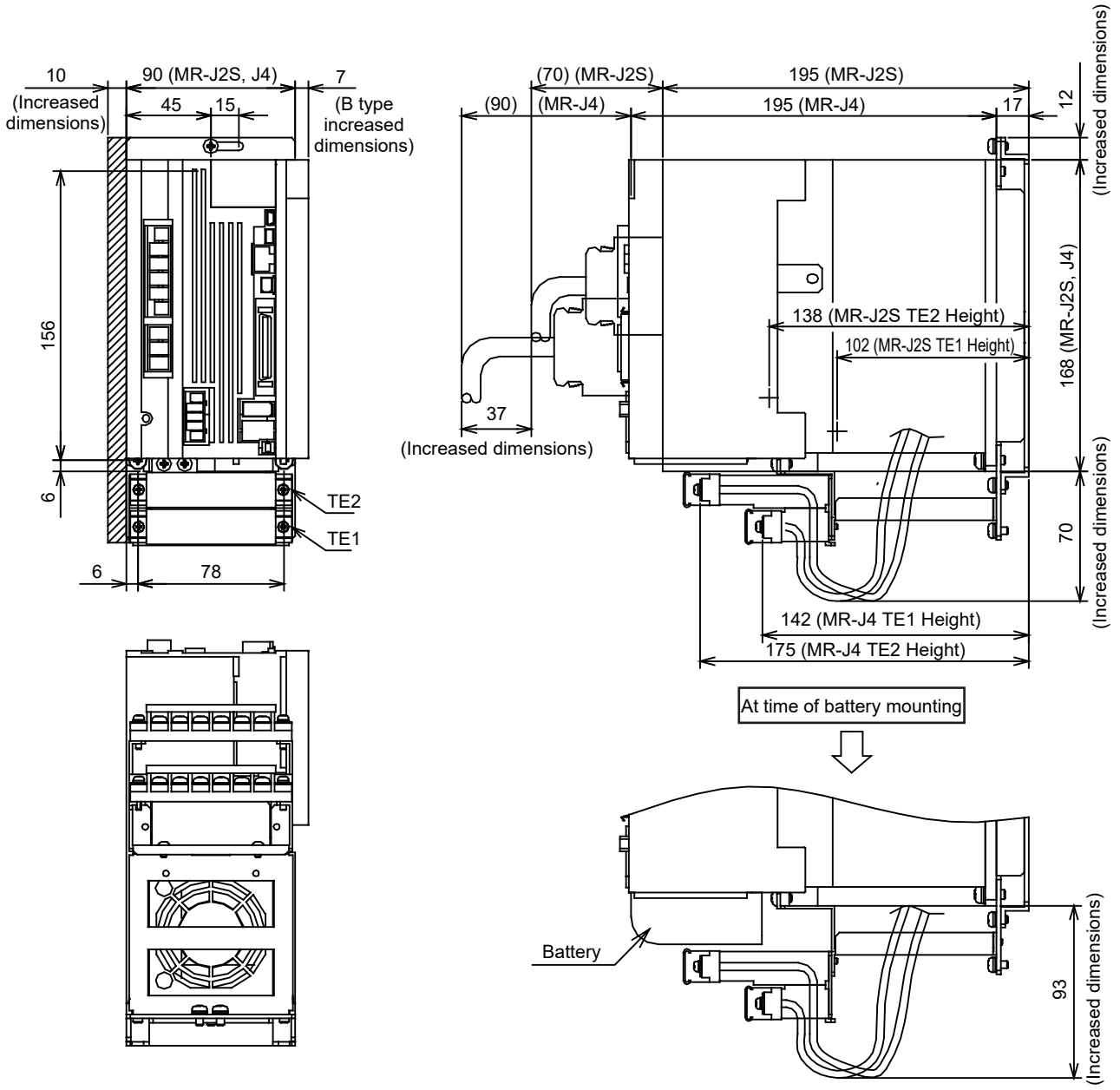

Note 1. The above dimensions are for when MR-BAT6V1SET has been mounted. Note that MR-BAT6V1BJ cannot be mounted.
2. Wiring and other items in the renewal kit are not drawn so that mounting method can be easily seen.

(5) SC-J2SJ4KT5K
SC-J2SBJ4KT5K
SC-J2SCPJ4KT5K

Unit [mm]

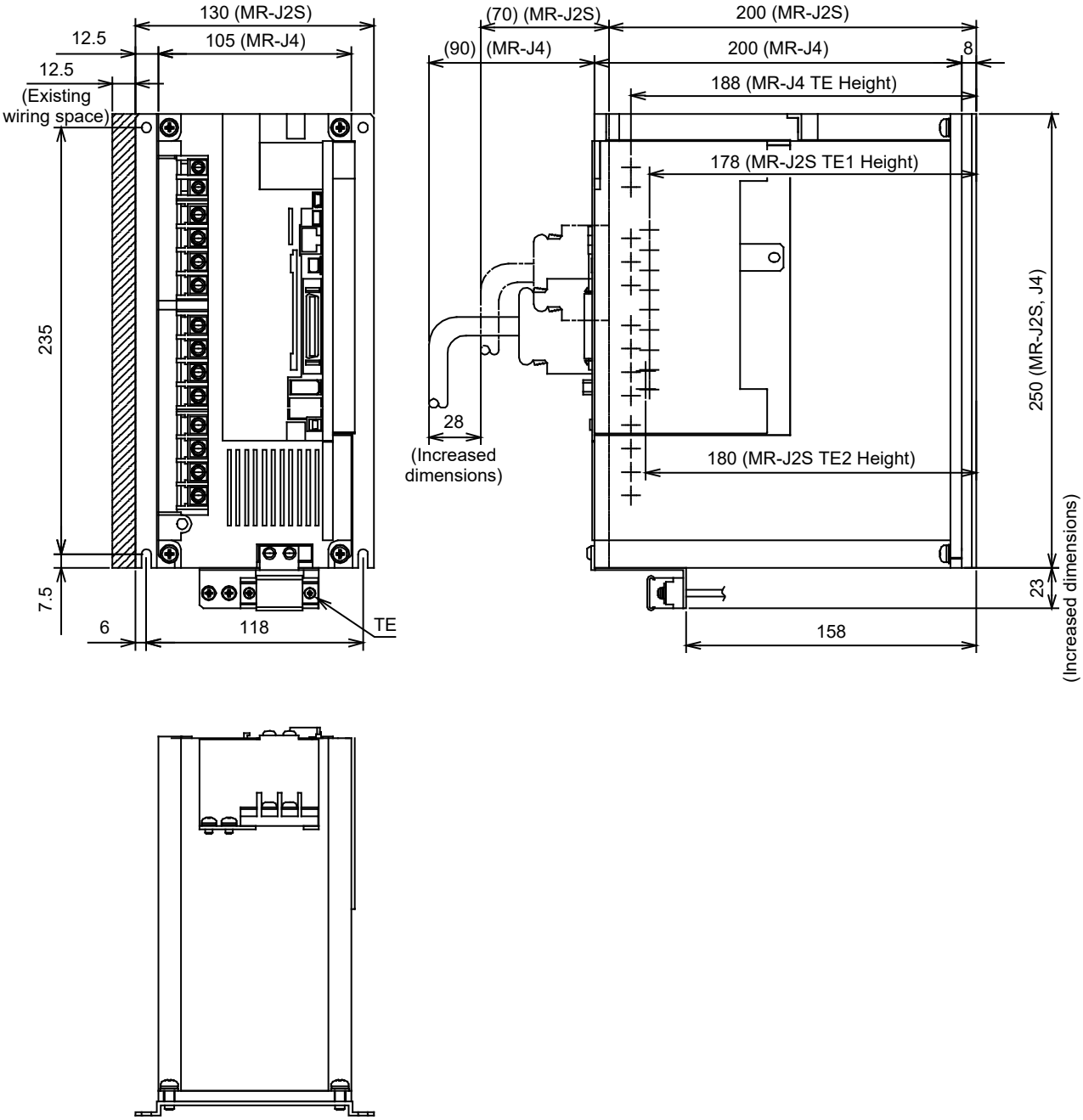

Note. Wiring and other items in the renewal kit are not drawn so that mounting method can be easily seen.

(6) SC-J2SJ4KT7K
SC-J2SBJ4KT7K
SC-J2SCPJ4KT7K

Unit [mm]

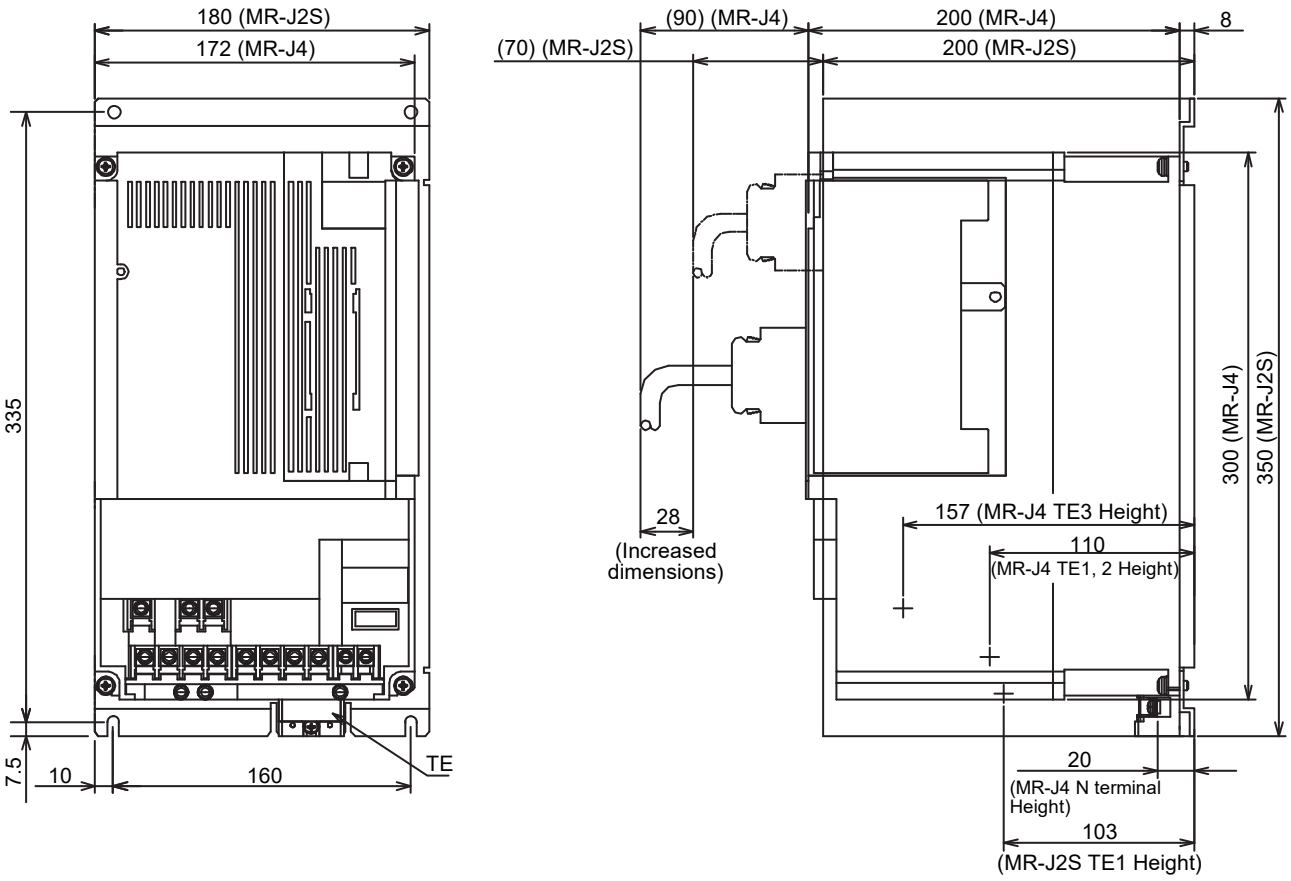

Note. Wiring and other items in the renewal kit are not drawn so that mounting method can be easily seen.

(7) SC-J2SJ4KT15K
SC-J2SBJ4KT15K

Unit [mm]

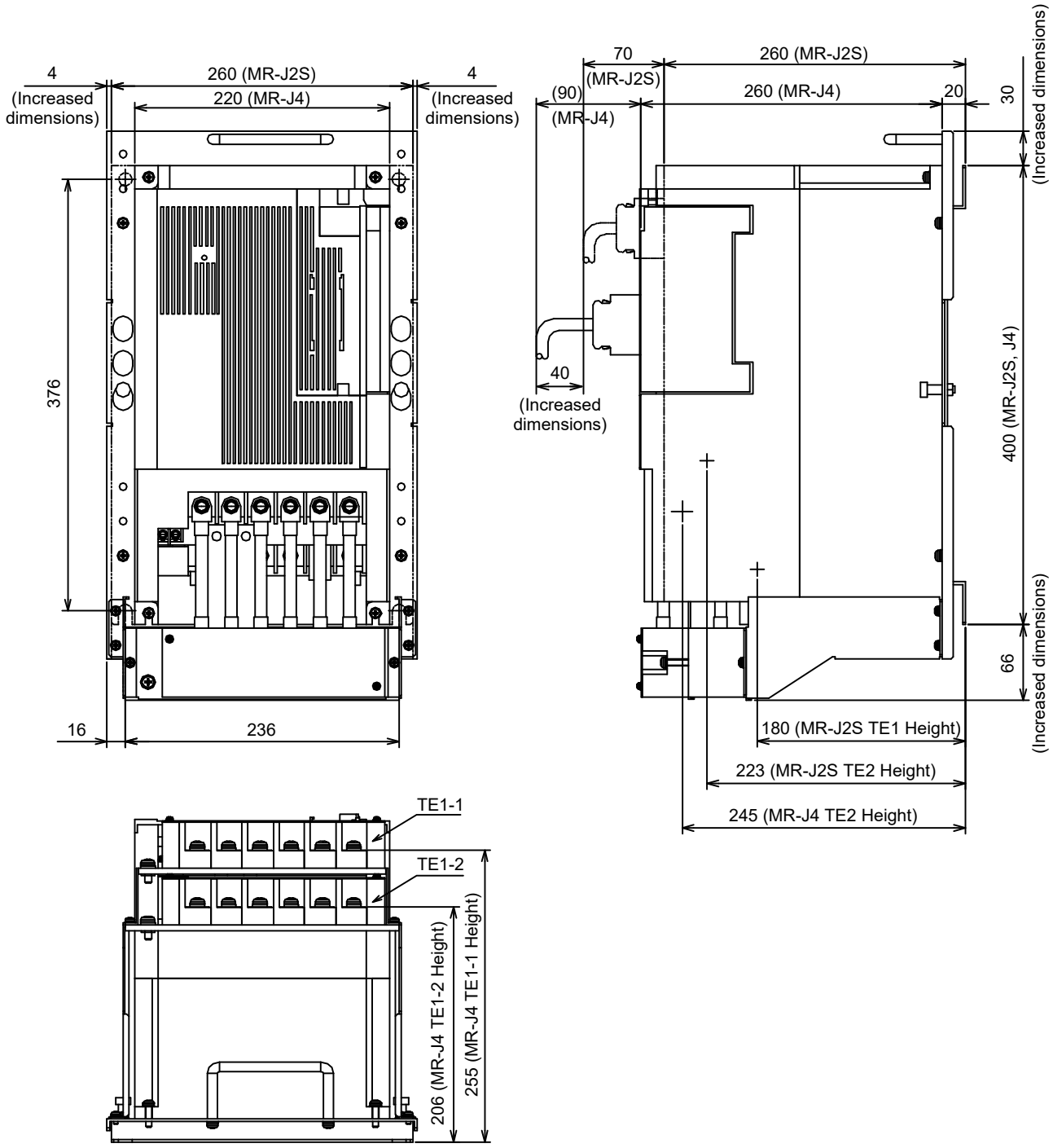

Note. A renewal kit is not compatible with a heat sink outside mounting attachment of the MR-J2S servo amplifier.

(8) SC-J2SJ4KT22K
SC-J2SBJ4KT22K

Unit [mm]

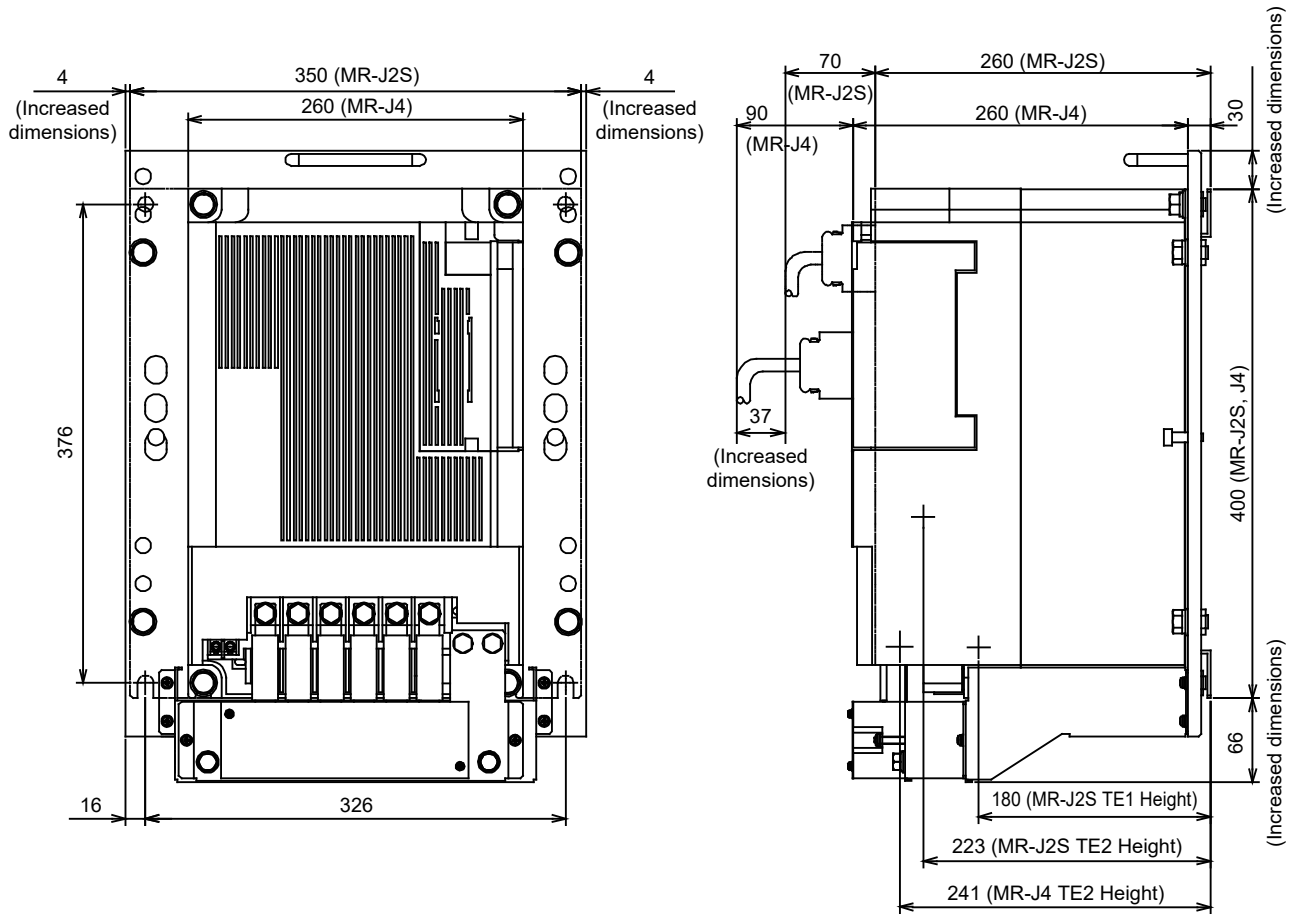

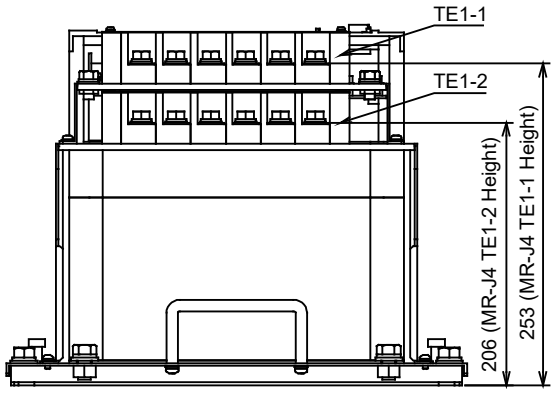

Note. A renewal kit is not compatible with a heat sink outside mounting attachment of the MR-J2S servo amplifier.

(9) SC-J2SJ4BS01

Unit [mm]

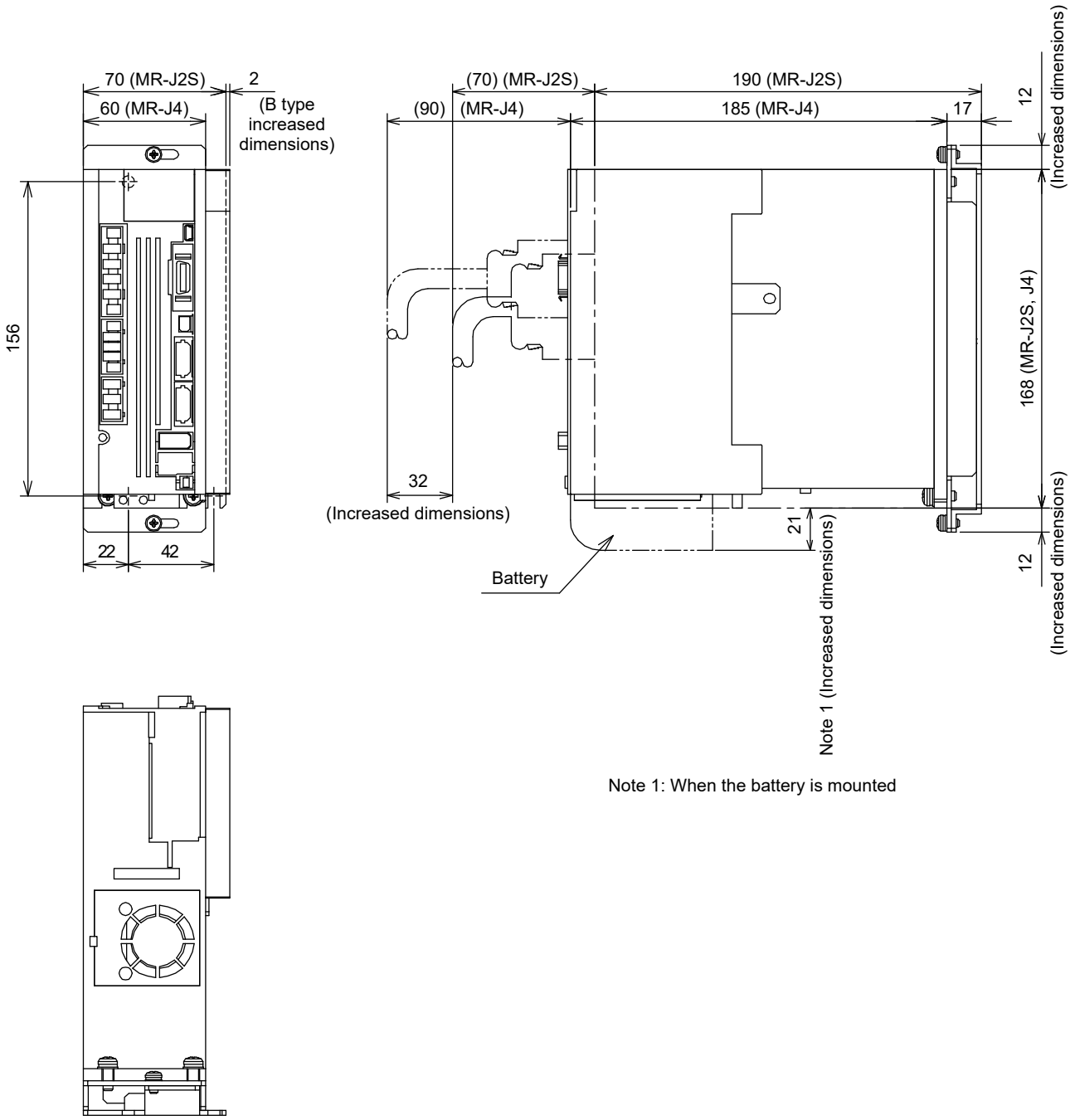

Note 1: When the battery is mounted

(10) SC-J2SJ4BS02

Unit [mm]

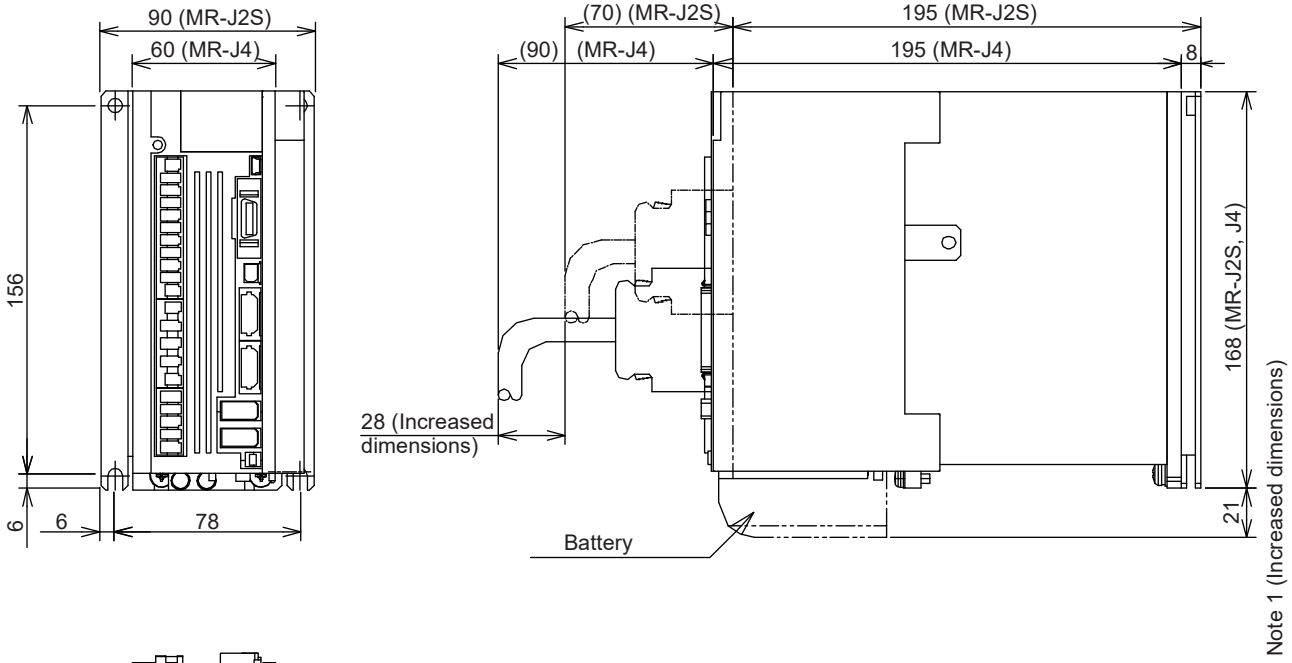

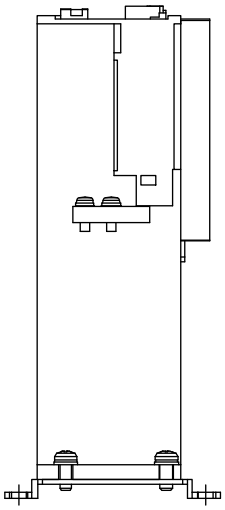

Note 1: When the battery is mounted

(11) SC-J2SJ4BS03

Unit [mm]

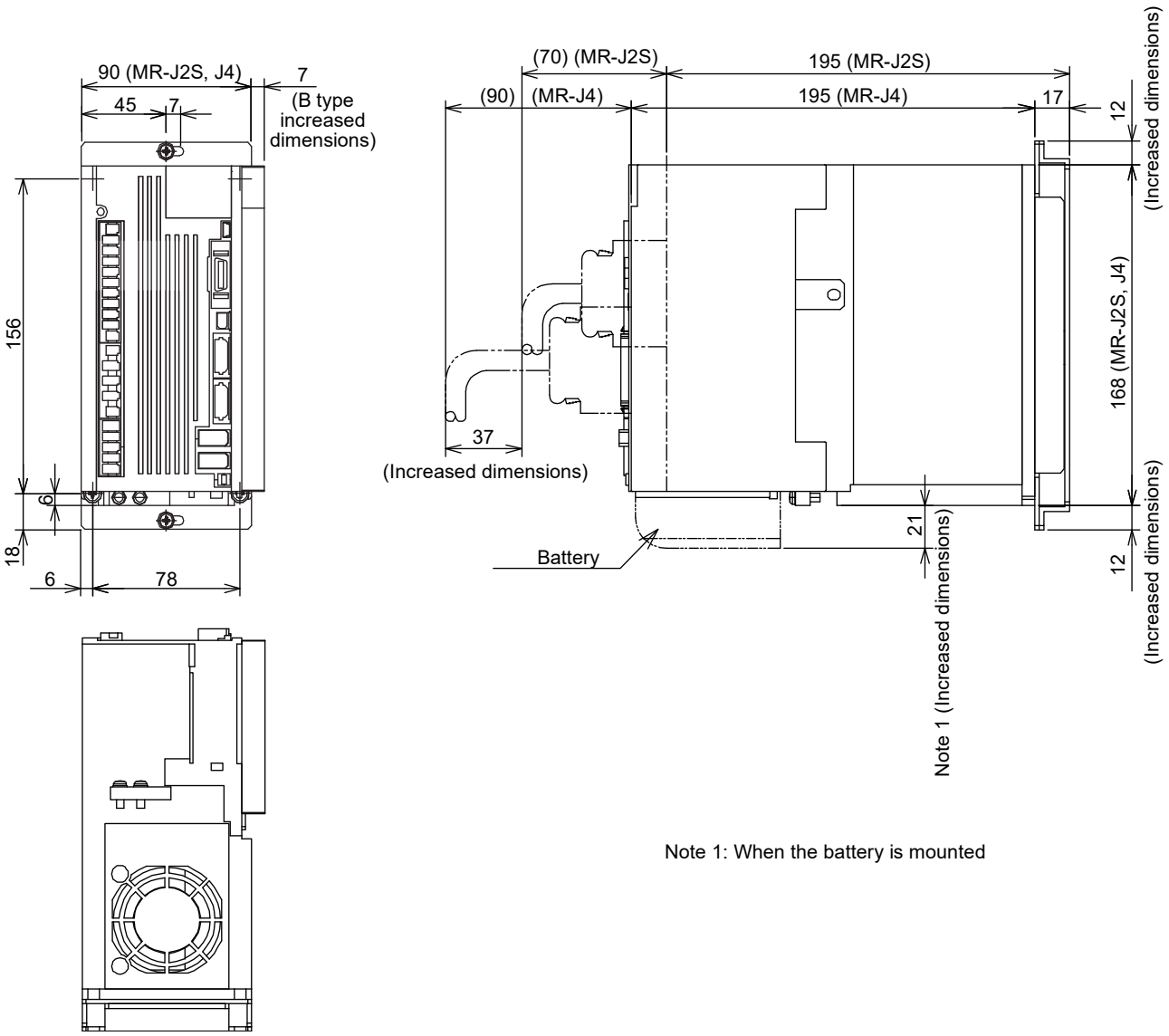

Note 1: When the battery is mounted

(12) SC-J2SJ4BS04

Unit [mm]

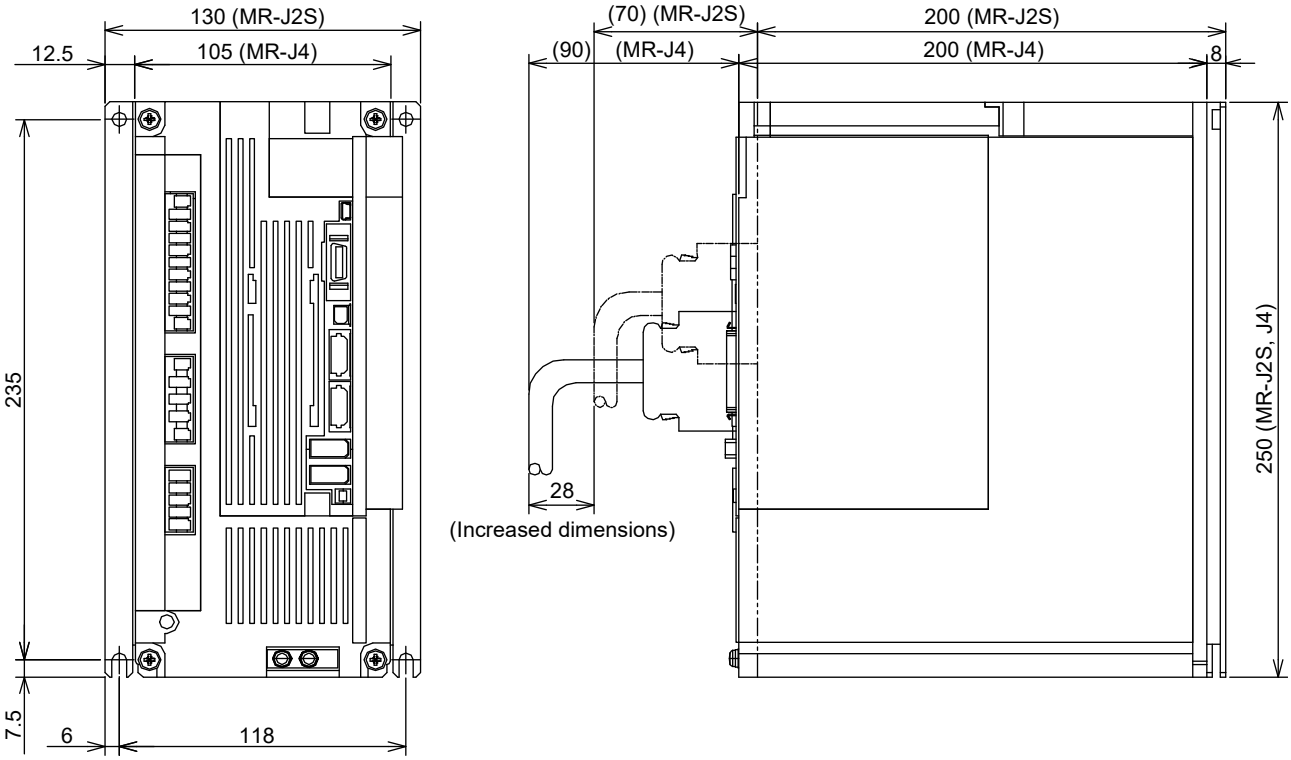

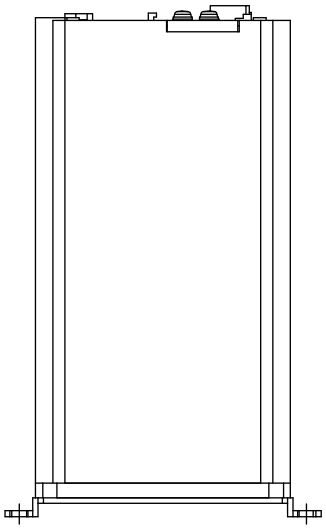

(13) SC-J2SJ4BS05

Unit [mm]

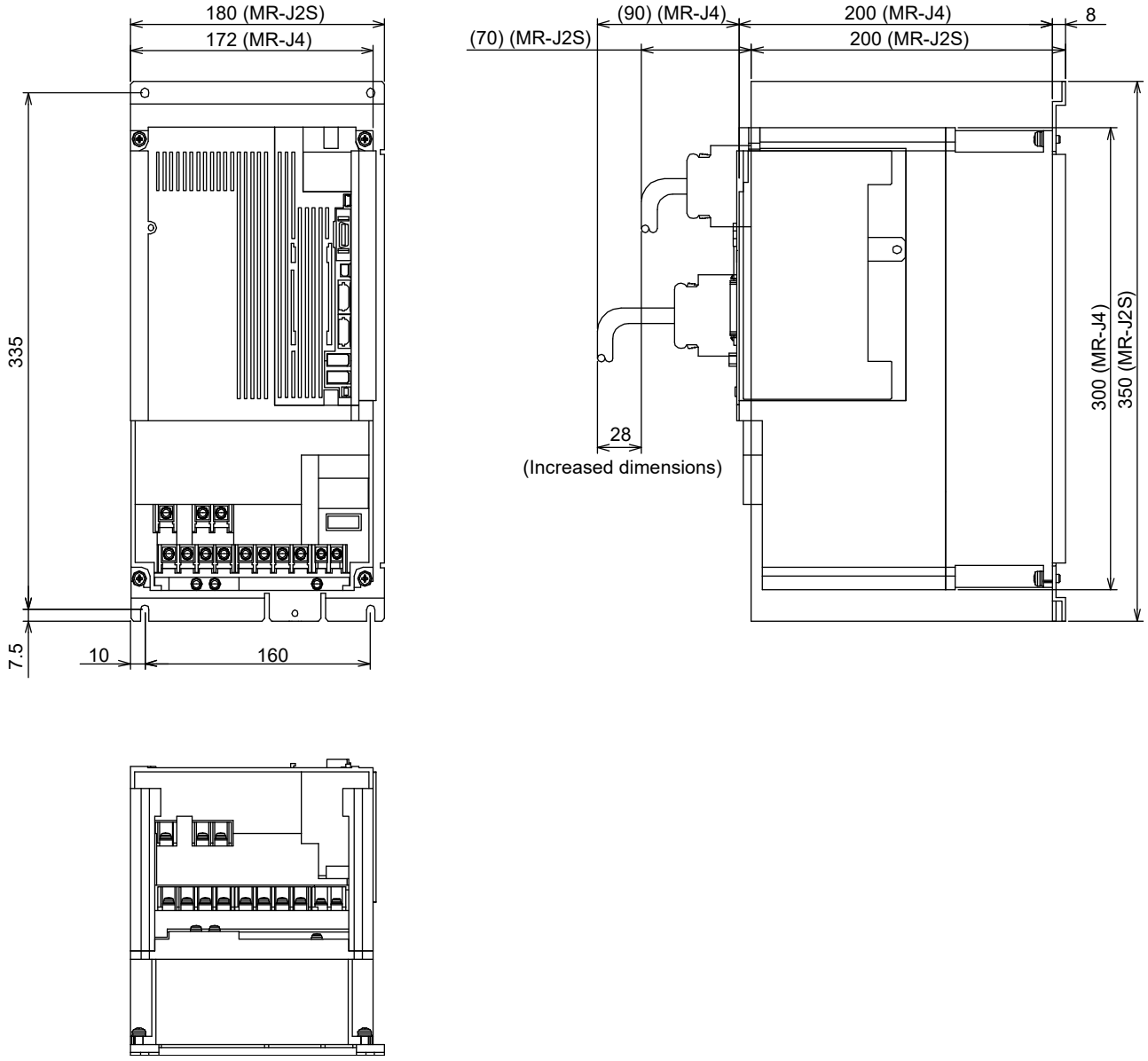

(14) SC-J2SJ4BS06

Unit [mm]

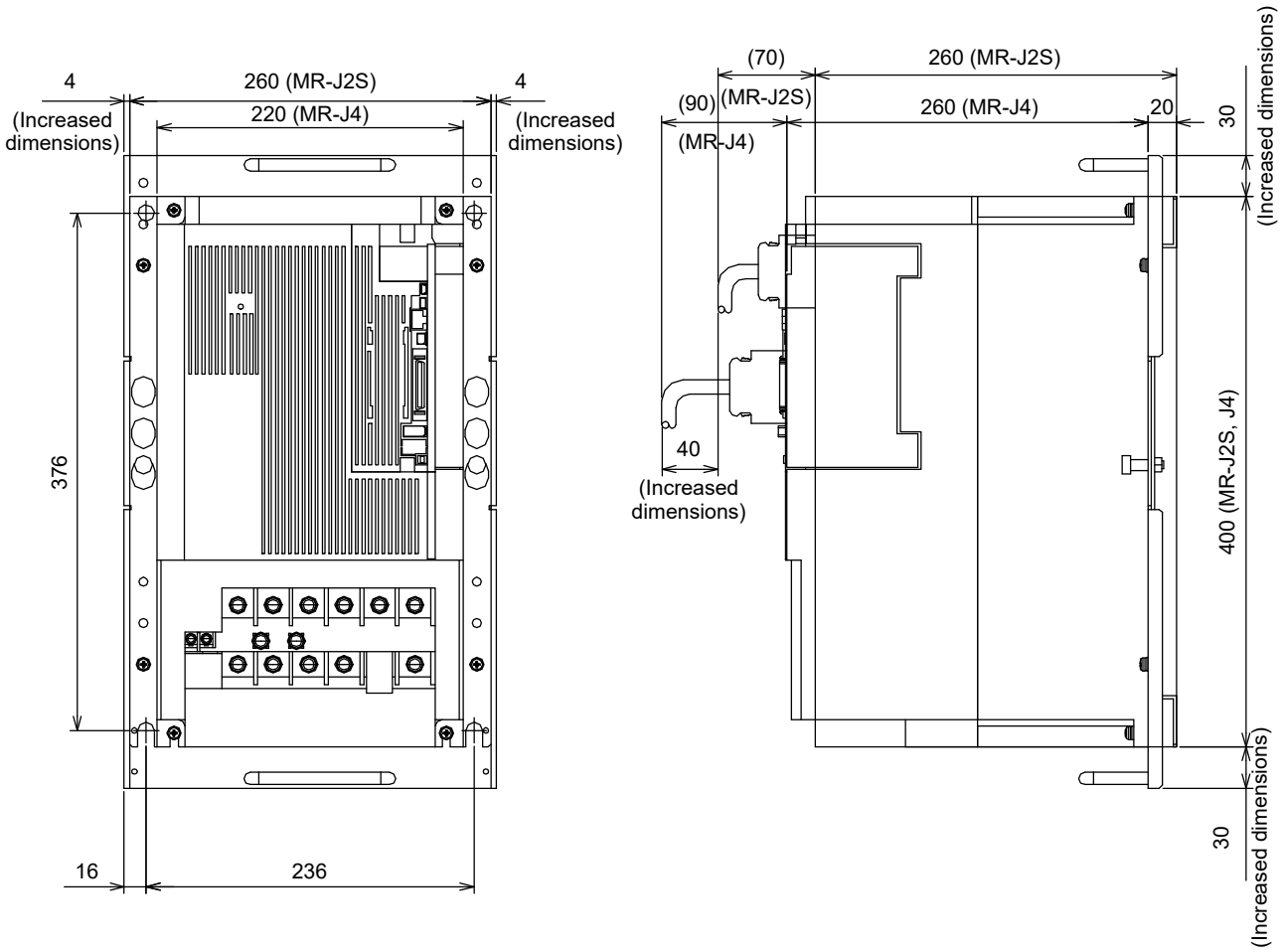

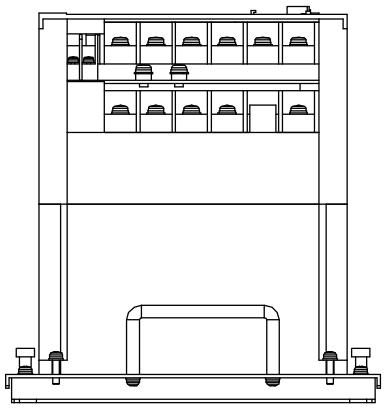

Note. A mounting attachment is not compatible with a heat sink outside mounting attachment of the MR-J2S servo amplifier.

(15) SC-J2SJ4BS07

Unit [mm]

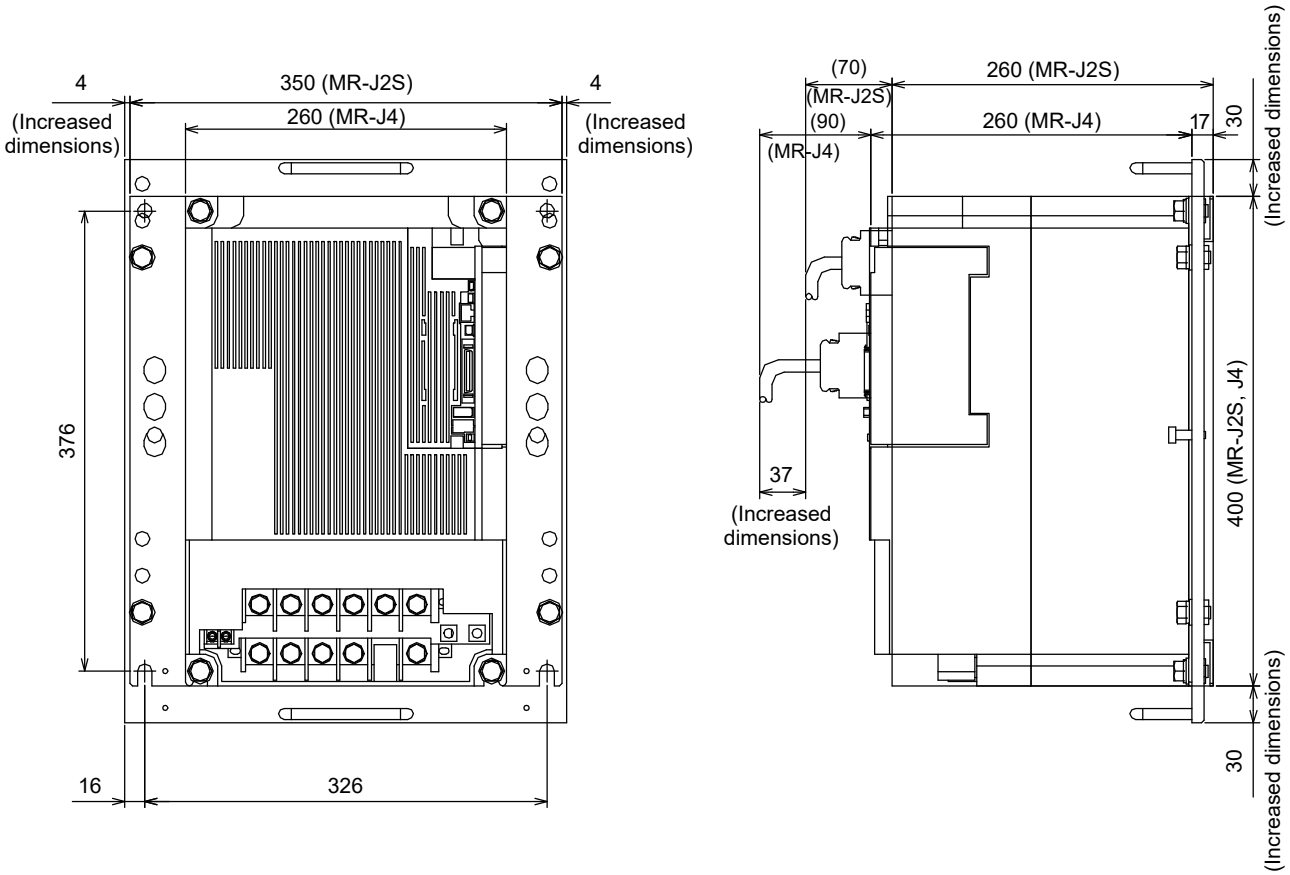

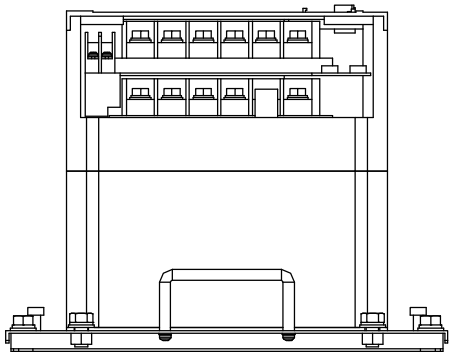

Note. A mounting attachment is not compatible with a heat sink outside mounting attachment of the MR-J2S servo amplifier.

(16) SC-J2SJ4BS08

Unit [mm]

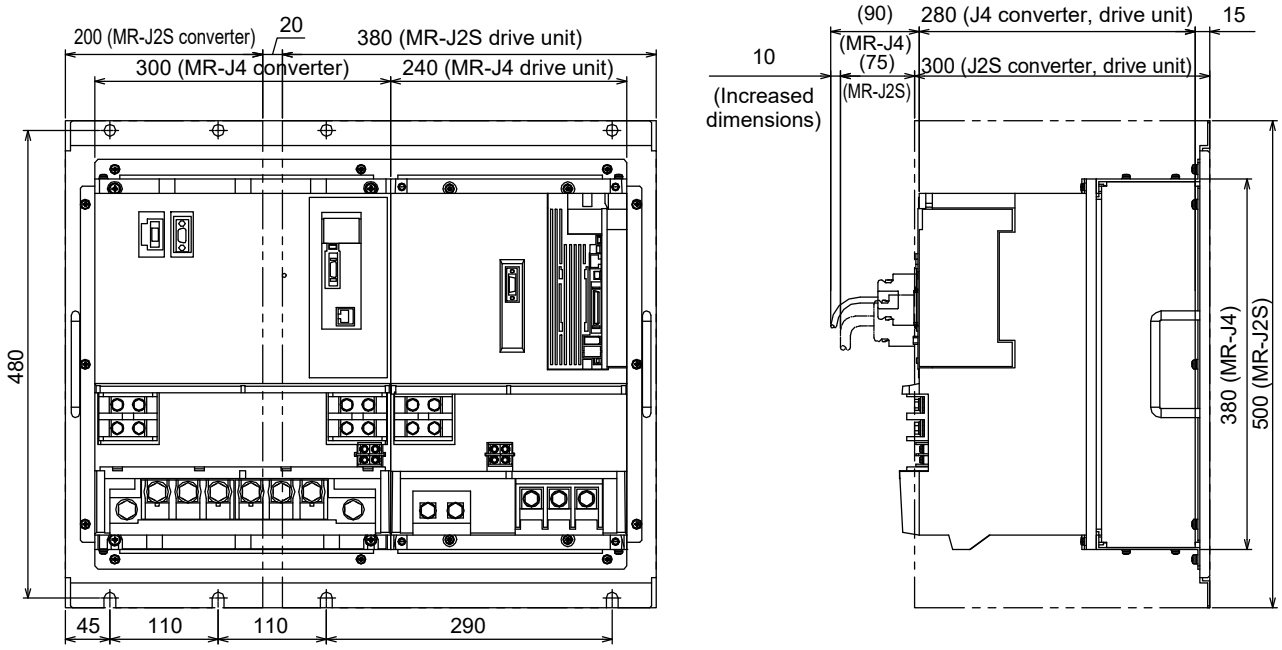

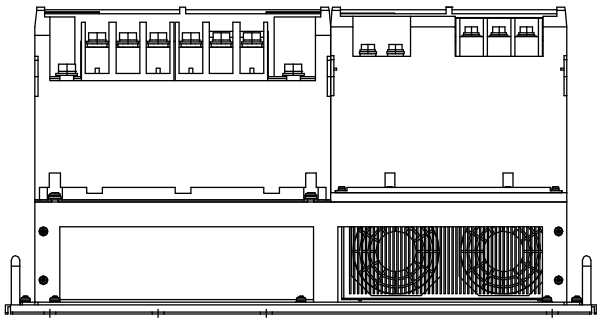

Note. A mounting attachment is not compatible with a heat sink outside mounting attachment of the MR-J2S servo amplifier.

(17) SC-J2SJ4BS09

Unit [mm]

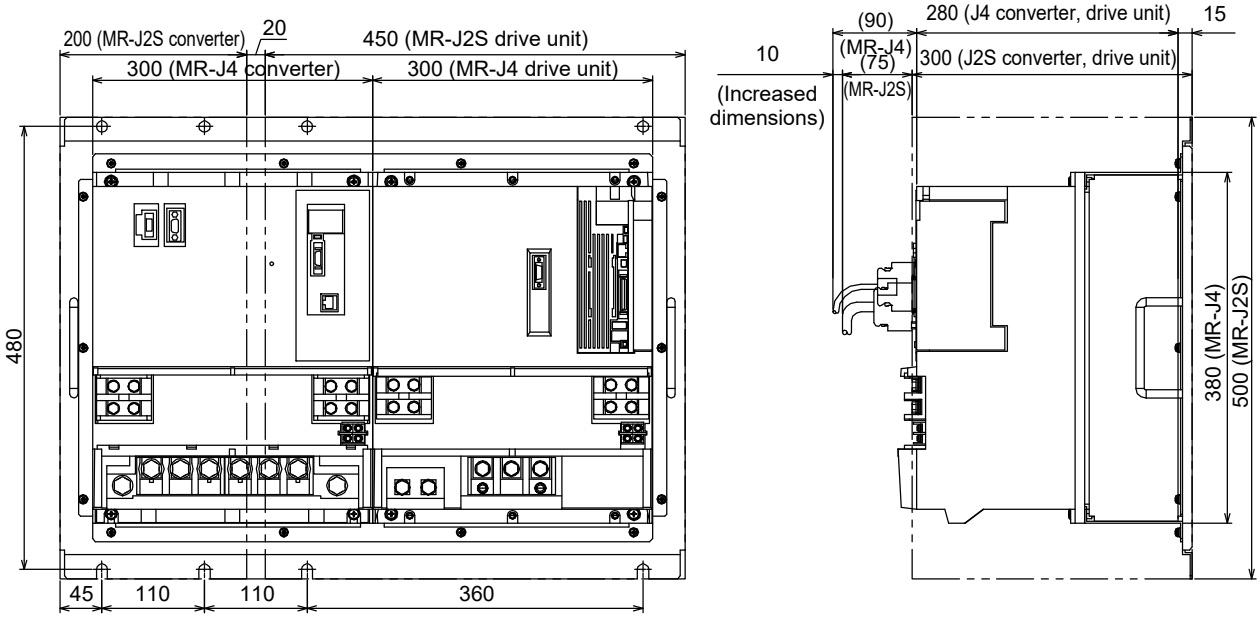

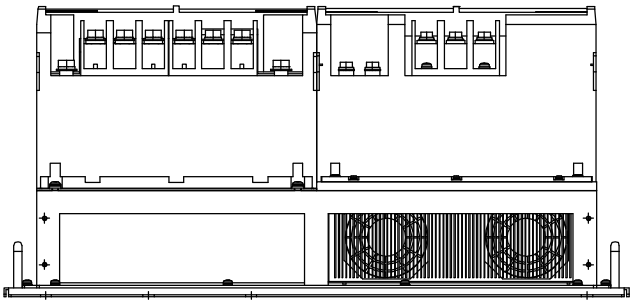

Variable dimensions of drive unit

	A
MR-J4-DU37KA(B)4	240
MR-J4-DU45KA(B)4	300
MR-J4-DU55KA(B)4	
MR-J4-DU30KA(B)	
MR-J4-DU37KA(B)	

Note. A mounting attachment is not compatible with a heat sink outside mounting attachment of the MR-J2S servo amplifier.

8.2 Conversion Cable

8.2.1 Conversion cable on the servo amplifier side

(1) SC-J2SJ4CTC03M, SC-J2SCPJ4CTC03M

[Unit: mm]

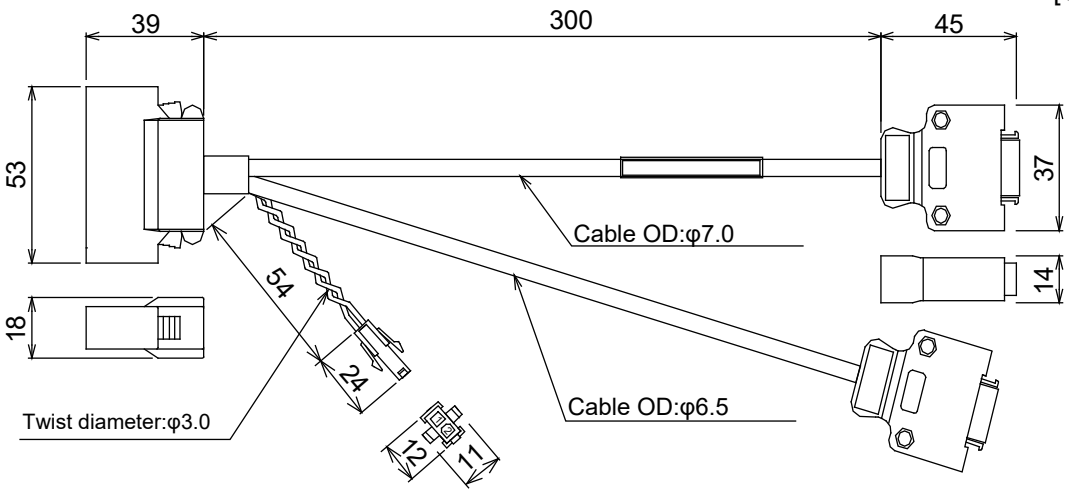

(2) SC-J2SBJ4CT1C03M

[Unit: mm]

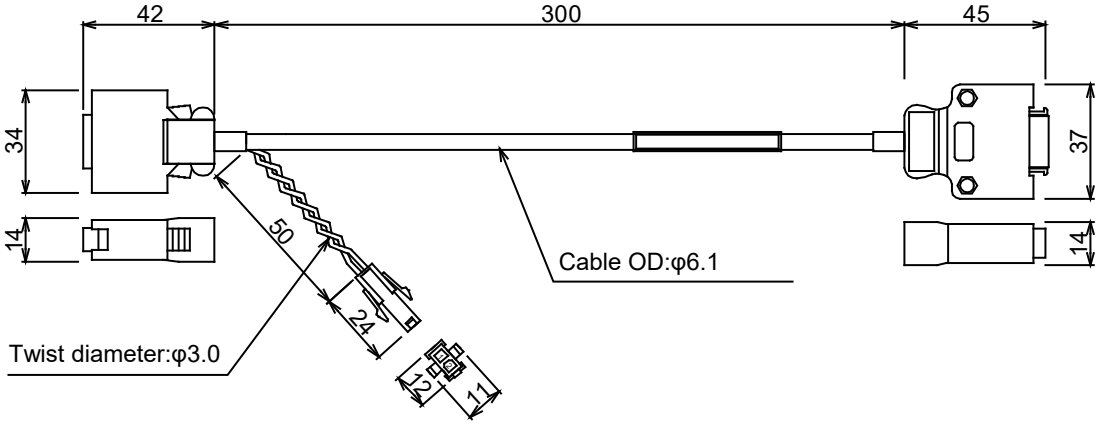

(3) SC-J2SBJ4CT2C03M

[Unit: mm]

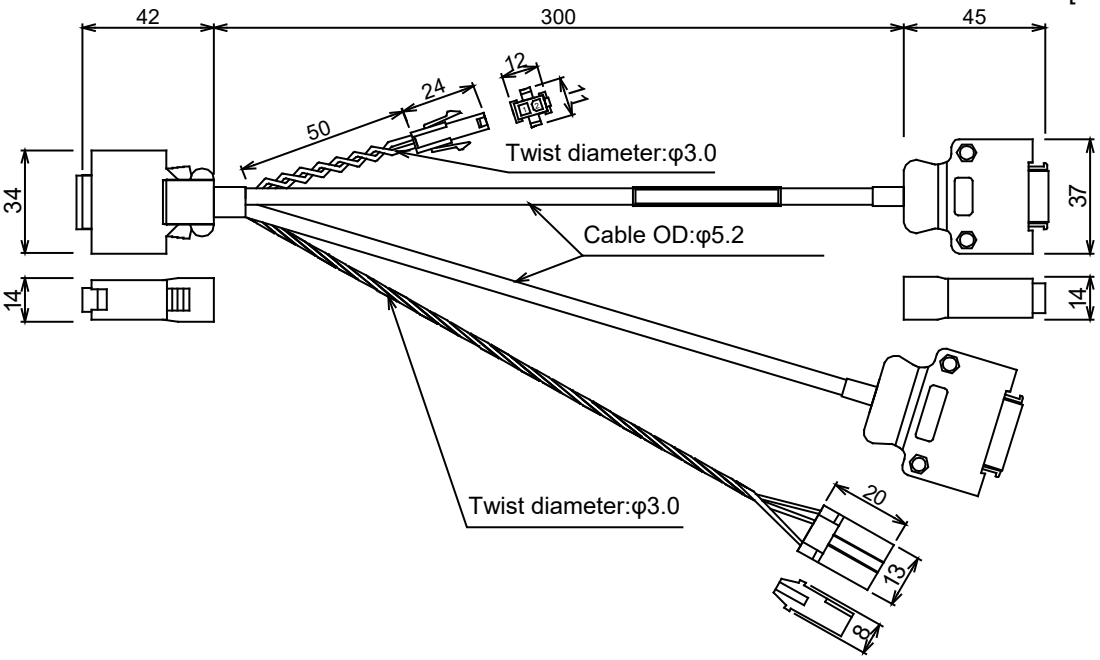

(4) SC-J2SJ4MOC03M

[Unit: mm]

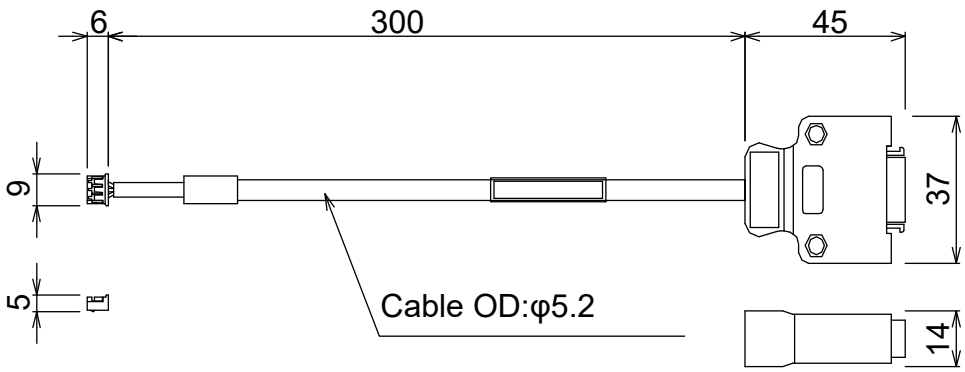

(5) SC-J2SJ4MO2C03M

[Unit: mm]

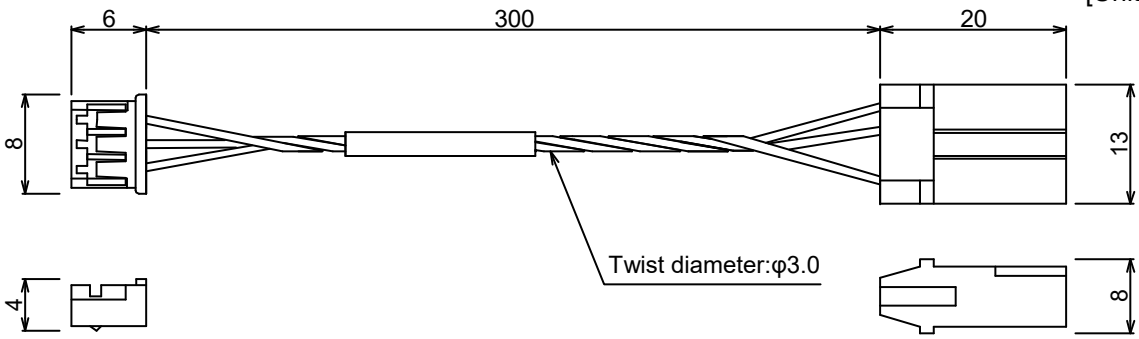

(6) SC-J2SJ4CTPWC5M

[Unit: mm]

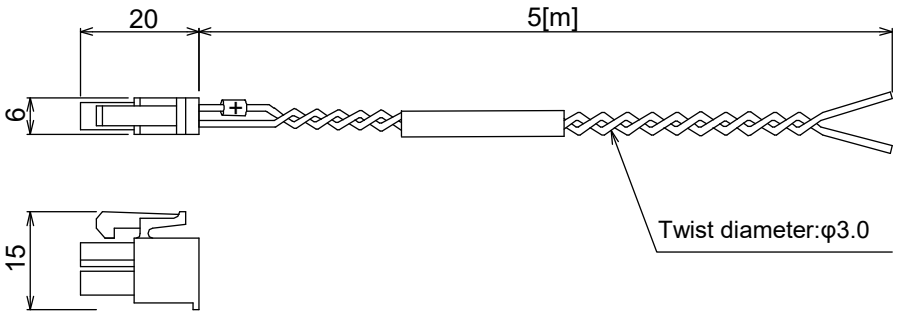

Connecting diagram

Signal name	Wire color
24 V DC+	Red
24 V DC-	White

(7) SC-J2SJ4ENC03M

[Unit: mm]

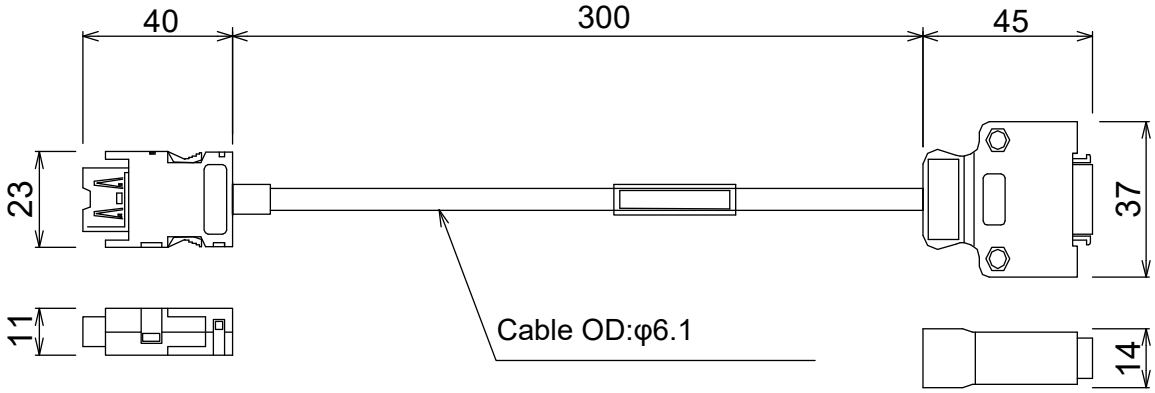

8.2.2 Power supply conversion cable on the motor side

(1) SC-J2SJ4PW1C03M-□

Cable use division: A1, A2 (Note 1)

[Unit: mm]

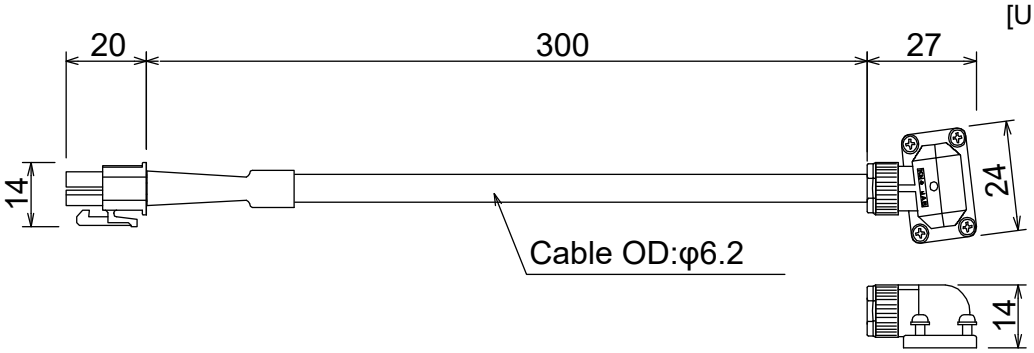

(2) SC-J2SJ4PWBK1C03M-□

Cable use division: A1, A2 (Note 1)

[Unit: mm]

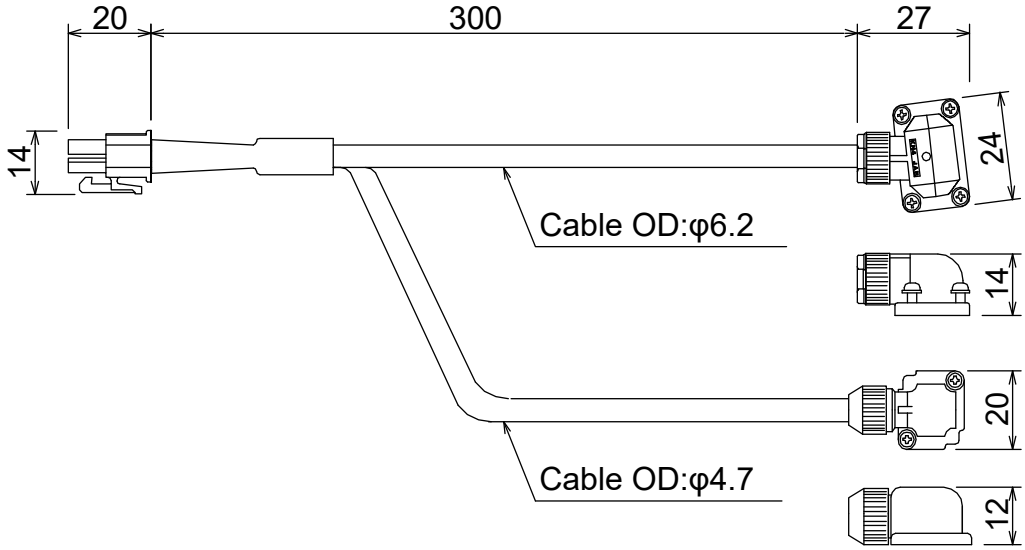

(3) SC-SAJ3PW2KC1M-S2
(4) SC-HAJ3PW1C1M
(5) SC-J2SJ4PW2C1M

[Unit: mm]

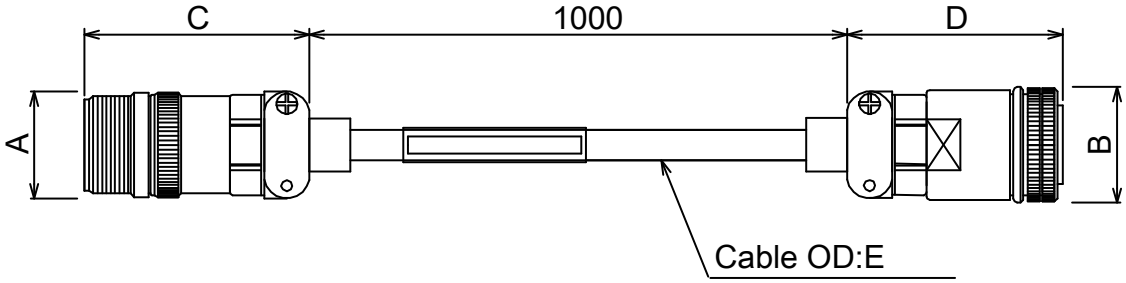

Item		Specifications		
Model		SC-SAJ3PW2KC1M-S2	SC-HAJ3PW1C1M	SC-J2SJ4PW2C1M
Connector dimensions	A	φ35	φ39	φ38
	B	φ35	φ41	φ44
	C	68	74	74
	D	78	77	77
Cable shape	E	12	14	14

Refer to the next page regarding Note 1.

(6) SC-J2SJ4PW3C1M-□

Cable use division: A1, A2 (Note 1)

[Unit: mm]

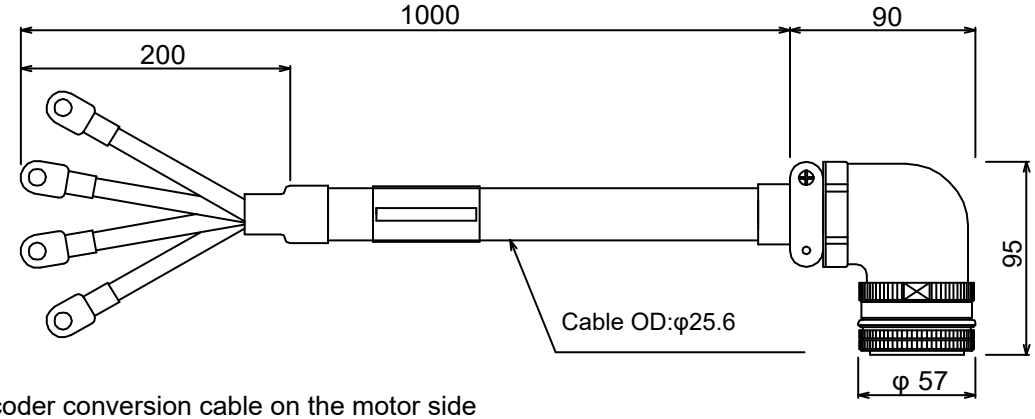

8.2.3 Encoder conversion cable on the motor side

(1) SC-HAJ3ENM1C03M-□

Cable use division: A1, A2 (Note 1)

[Unit: mm]

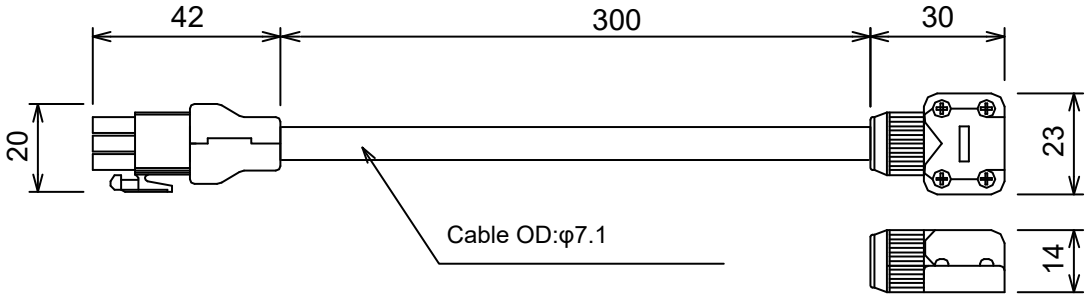

(2) SC-HAJ3ENM3C1M

[Unit: mm]

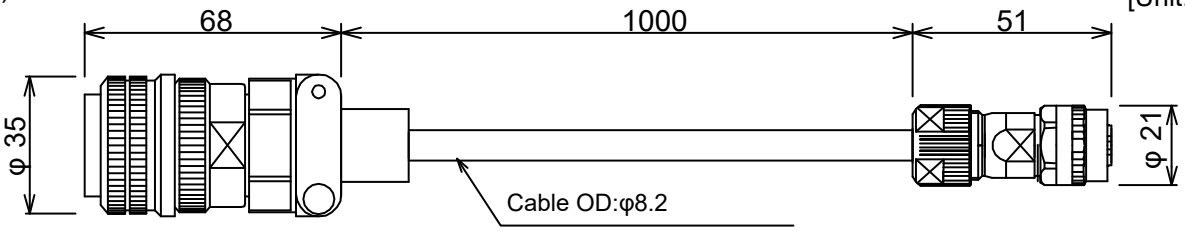

8.2.4 Conversion cable for the cooling fan on the motor side

[Unit: mm]

(1) SC-J2SJ4FAN1C1M

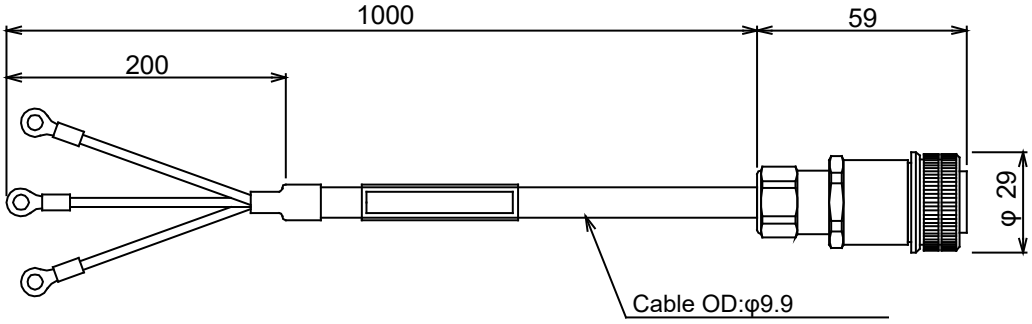

Note 1. Cable usage division

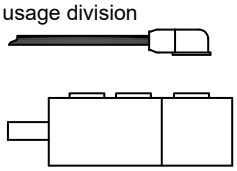

A1: Load-side lead

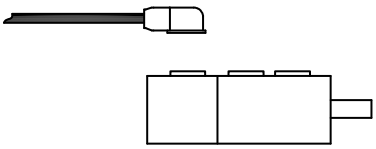

A2: Opposite to load-side lead

REVISIONS

*The installation guide number is given on the bottom left of the back cover.

Print date	*Installation guide number	Revision description	
August 2013	L(NA)03093-A	First edition	
June 2015	L(NA)03093-B	SAFETY INSTRUCTIONS	Modified the table.
		Part 1, Section 2.1	Modified the table.
		Part 1, Section 3.2	Modified the table.
		Part 1, Section 3.3.1	Modified the table.
		Part 1, Section 3.3.2	Modified the contents.
		Part 1, Section 3.3.4	Modified the contents.
		Part 1, Section 4.2	Modified the contents.
		Part 2, Section 2.2	Modified the contents.
		Part 2, Section 3.1	Modified the table.
		Part 2, Section 3.2	Modified the table.
		Part 2, Section 3.3, (1)	Modified the table.
		Part 2, Section 3.4	Modified the table.
		Part 2, Section 3.6.1, (1), (2)	Modified the table.
		Part 2, Section 3.6.2	Modified the table.
		Part 2, Section 3.6.3	Modified the table.
		Part 3, Chapter 1	Modified the contents.
		Part 3, Section 2.1	Modified the figure.
		Part 3, Section 2.2	Modified the table.
		Part 3, Section 3.1	Modified the table.
		Part 3, Section 3.2	Modified the table.
		Part 3, Section 3.5	Modified the contents.
		Part 3, Section 3.7.3	Modified the table.
		Part 3, Section 3.8	Modified the contents.
		Part 4, Part 5	New addition
		Part 4, Section 2.2	Modified the table.
		Part 6 to 10	Modified part 4, 5, 6, 7 and 8 into part 6, 7, 8, 9 and 10 respectively.
		Part 6, Section 2.1	Modified the figure.
		Part 6, Section 3.1.1	Modified the table.
		Part 6, Section 3.3	Modified the table.
		Part 6, Section 3.5.1, (1)	Modified the contents.
		Part 6, Section 4.1	Modified the figure.
		Part 6, Section 4.2	Modified the contents.
		Part 6, Section 4.5	Modified the contents.
		Part 6, Section 4.7.1	Modified the contents.
		Part 7, Section 1.1	Modified the table.
		Part 7, Section 1.2.1	Modified the table.
		Part 7, Section 1.2.2	Modified the table.
		Part 7, Section 1.2.3	Modified the contents.
		Part 7, Section 1.2.4	Modified the contents.
		Part 7, Section 1.2.5	Modified the table.
		Part 7, Section 1.2.6	Modified the contents.
		Part 7, Section 1.2.8	Modified the contents.
		Part 7, Section 1.2.9	Modified the contents.
		Part 7, Section 2.1.1 to Section 2.1.7	Reviewed Section 2.1.1 and 2.1.2 layouts, and modified them into Section 2.1.1 to 2.1.7.
		Part 7, Section 2.2	Modified the contents.
		Part 7, Section 2.3, Section 2.4	Reviewed Chapter 3 layout and modified it into Section 2.3 and 2.4.

Print date	*Installation guide number	Revision description	
June 2015	L(NA)03093-B	Part 7, Chapter 3, Chapter 4	Modified Chapter 4 and 5 into Chapter 3 and 4 respectively.
		Part 7, Section 3.1	Modified the contents.
		Part 7, Section 4.1	Modified the contents.
		Part 7, Section 4.2	Added a table.
		Part 7, Section 4.3	New addition
		Part 8, Section 1.1	Modified the table.
		Part 8, Section 2.1	Modified the table.
		Part 8, Section 2.2	Modified the contents.
		Part 8, Section 2.3	Modified the contents.
		Part 8, Section 2.4	Modified the contents.
		Part 8, Section 2.5	Modified the table.
		Part 8, Section 2.6	Modified the contents.
		Part 8, Section 2.7	Modified the contents.
		Part 9, Chapter 1	Modified the contents.
		Part 9, Section 1.1	Modified the contents.
		Part 9, Section 1.1.1	Modified the contents.
		Part 9, Section 1.1.3	Modified the contents.
		Part 9, Section 1.2	Modified the contents.
		Part 9, Section 1.3	Modified the contents.
		Part 9, Section 1.3.1	Modified the contents.
		Part 9, Section 1.3.2	Modified the table.
		Part 9, Section 1.4	Modified the table.
		Part 9, Chapter 2	Modified the table.
		Part 9, Section 2.1	Modified the table.
		Part 9, Chapter 3	Modified the table.
		Part 9, Section 4.1.1	Modified the table.
		Part 9, Section 4.1.2	Modified the table.
		Part 9, Section 4.2.1	Modified the contents.
		Part 9, Section 4.2.2	Modified the contents.
		Part 9, Section 4.3.1	Modified the table.
		Part 9, Section 4.3.2	Modified the table.
		Part 9, Section 5.3.1	Modified the contents.
		Part 9, Section 5.3.2	Modified the contents.
		Part 9, Section 5.3.3, Section 5.3.4	New addition
		Part 9, Section 6.1	Modified the table.
		Part 9, Section 6.1.1	Modified the contents.
		Part 9, Section 6.2	Modified the table.
		Part 9, Section 6.2.1	Modified the contents.
		Part 9, Section 6.3	Modified the table.
		Part 9, Section 6.3.1	Modified the contents.
		Part 9, Section 6.3.2	Modified the contents.
		Part 9, Section 6.4	Modified the contents.
		Part 9, Section 6.4.1	Modified the table.
		Part 9, Section 6.4.3	Modified the contents.
		Part 9, Section 7.1	Modified the contents.
		Part 9, Section 7.2	Modified the contents.
		Part 9, Section 7.3	Modified the contents.
		Part 9, Section 7.4	Modified the contents.
		Part 9, Section 7.5	Modified the contents.
		Part 9, Section 7.6	Modified the contents.
		Part 9, Section 7.7	Modified the contents.

Print date	*Installation guide number	Revision description	
June 2015	L(NA)03093-B	Part 9, Section 7.8	Modified the contents.
		Part 9, Section 8.1	Modified the contents.
		Part 9, Section 8.2.1	Modified the contents.
		Part 9, Section 8.3.1	Modified the table.
		Appendix 1	Revised all contents.
		Appendix 1, Chapter 7	Modified the table.
		Appendix 1, Section 8.1	Modified the contents.
		Appendix 1, Chapter 11	New addition
		Appendix 2, Section 1.1	Modified the contents.
		Appendix 2, Section 1.2	Modified the contents.
		Appendix 2, Section 1.2.1	Modified the figure.
		Appendix 2, Section 1.2.2	Modified the table.
		Appendix 2, Section 1.3	Modified the contents.
		Appendix 2, Section 1.4	Modified the contents.
		Appendix 2, Chapter 2	Modified the contents.
		Appendix 2, Section 2, (2)	Modified the table.
		Appendix 2, Chapter 3	Modified the contents.
		Appendix 2, Section 3.1	Modified the contents.
		Appendix 2, Section 3.2.1	Modified the contents.
		Appendix 2, Chapter 4	Revised all contents.
		Appendix 2, Section 4.1	Modified the contents.
		Appendix 2, Section 4.2	Modified the contents.
		Appendix 2, Section 4.3	Modified the contents.
		Appendix 2, Chapter 5	Revised all contents.
		Appendix 2, Section 5.1	Modified the contents.
		Appendix 2, Section 5.2	Modified the contents.
		Appendix 2, Section 5.3	Modified the contents.
		Appendix 2, Section 5.4	Modified the contents.
		Appendix 2, Section 5.5	Modified the contents.
		Appendix 2, Section 5.6	Modified the contents.
		Appendix 2, Section 5.7	Modified the contents.
		Appendix 2, Section 5.8	Modified the contents.
		Appendix 2, Section 6.1	Modified the table.
		Appendix 2, Section 6.2	Modified the table.
		Appendix 2, Chapter 7	New addition
		Appendix 2, Section 7.2.1	Modified the contents.
		Appendix 2, Chapter 8	Modified former Chapter 7 into Chapter 8 due to adding the new Chapter 7.
		Appendix 2, Section 8.1	Modified the contents.
July 2016	L(NA)03093-C	Part 1, Section 2.2	The table is partially changed.
		Part 1, Section 3.2	Partially changed.
		Part 1, Section 3.2	The table is partially changed.
		Part 1, Section 3.3.1	The table is partially changed.
		Part 1, Section 4.3	Partially changed.
		Part 1, Section 4.5	Partially changed.
		Part 2, Section 2.1, Section 2.2	The diagram is partially changed.
		Part 2, Section 3.6.1, (1)	The table is partially changed.
		Part 2, Section 3.6.3	The table is partially changed.
		Part 3, Chapter 1	The table is partially changed.
		Part 3, Section 2.1	The diagram is partially changed.
		Part 3, Section 2.2	Partially changed.
		Part 3, Section 2.2, (1)	The diagram is partially changed.

Print date	*Installation guide number	Revision description	
July 2016	L(NA)03093-C	Part 3, Section 2.2, (2)	The diagram is partially changed.
		Part 3, Section 2.2, (3)	The diagram is partially changed.
		Part 3, Section 2.2, (4)	The diagram is partially changed.
		Part 3, Section 3.5, (1)	The diagram is partially changed.
		Part 3, Section 3.7.2	The table is partially changed.
		Part 3, Section 3.7.3	The table is partially changed.
		Part 4, Section 2.1	The diagram is partially changed.
		Part 4, Section 2.2, (1)	The diagram is partially changed.
		Part 4, Section 3.1, (1)	The table is partially changed.
		Part 4, Section 3.1, (2)	The table is partially changed.
		Part 4, Section 3.6, (1) (b)	The table is partially changed.
		Part 4, Section 3.6.3	The table is partially changed.
		Part 4, Section 3.7, (6)	The table is partially changed.
		Part 6, Section 3.1.1	The table is partially changed.
		Part 6, Section 3.3, (1)	The diagram is partially changed.
		Part 6, Section 3.3, (1)	The table is partially changed.
		Part 6, Section 3.5.1, (1)	The table is partially changed.
		Part 6, Section 4.2, (1)	The diagram is partially changed.
		Part 6, Section 4.5, (1)	The diagram is partially changed.
		Part 6, Section 4.5, (1)	The table is partially changed.
		Part 7, Section 1.1, (1)	The table is partially changed.
		Part 7, Section 1.1, (2)	The table is partially changed.
		Part 7, Section 1.1, (3)	The table is partially changed.
		Part 7, Section 2.1.4	The diagram is partially changed.
		Part 7, Section 2.1.5	The diagram is partially changed.
		Part 7, Section 2.1.6	The diagram is partially changed.
		Part 7, Section 2.1.7	The diagram is partially changed.
		Part 7, Section 2.3.1	POINT is changed.
		Part 7, Section 2.3.3, (3)	The diagram is partially changed.
		Part 7, Section 2.3.4, (2)	The diagram is partially changed.
		Part 7, Section 2.3.4, (3)	The diagram is partially changed.
		Part 7, Section 2.3.4, (4)	The diagram is partially changed.
		Part 7, Section 2.3.5	POINT is changed.
		Part 7, Section 2.3.5, (1)	The table is partially changed.
		Part 7, Section 2.3.5, (2)	The table is partially changed.
		Part 7, Section 2.3.5, (3)	The table is partially changed.
		Part 7, Section 2.3.5, (6)	The table is partially changed.
		Part 7, Section 2.3.5, (7)	The table is partially changed.
		Part 7, Section 2.4	POINT is changed.
		Part 7, Section 2.4.1, (2)	The diagram is partially changed.
		Part 7, Section 2.4.1, (4)	Partially changed.
		Part 7, Section 2.4.1, (5)	Partially changed.
		Part 7, Section 2.4.1, (6)	Partially changed.
		Part 7, Section 2.4.2	Partially changed.
		Part 7, Section 2.4.2, (2)	Partially changed.
		Part 7, Section 2.4.2, (3)	The diagram is partially changed.
		Part 7, Section 2.4.2, (4)	The diagram is partially changed.
		Part 7, Section 2.4.3	The table is partially changed.
		Part 7, Section 4.1, (1)	The table is partially changed.
		Part 7, Section 4.1, (2)	The table is partially changed.
		Part 7, Section 4.2	The table is partially changed.
		Part 7, Section 4.3	The diagram is partially changed.
		Part 8, Section 2.1	The table is partially changed.

Print date	*Installation guide number	Revision description	
July 2016	L(NA)03093-C	Part 8, Section 2.5, (6)	The table is partially changed.
		Part 8, Section 2.6, (3)	The diagram is partially changed.
		Part 8, Section 2.7	POINT is changed.
		Part 9, Section 1.1.1	Partially changed.
		Part 9, Section 1.2	The table is partially changed.
		Part 9, Section 1.3.1	Partially changed.
		Part 9, Section 1.3.2	The table is partially changed.
		Part 9, Section 1.4	The table is partially changed.
		Part 9, Chapter 3	The table is partially changed.
		Part 9, Section 4.1.2	Partially changed.
		Part 9, Section 4.2.2, (1)	The table is partially changed.
		Part 9, Section 4.2.2, (2)	The table is partially changed.
		Part 9, Section 4.3.2, (1)	The table is partially changed.
		Part 9, Section 8.2	POINT is changed.
		Appendix 1, Chapter 1	Partially changed.
		Appendix 1, Section 1.1.1	Partially changed.
		Appendix 1, Section 2.1	Partially changed.
		Appendix 1, Chapter 5	Partially changed.
		Appendix 1, Chapter 5, (1)	Partially changed.
		Appendix 1, Chapter 7	Partially changed.
		Appendix 1, Chapter 7, (1)	Items are added.
		Appendix 1, Chapter 7, (2)	Items are added.
		Appendix 1, Chapter 8	Partially changed.
		Appendix 1, Section 9.1	Partially changed.
		Appendix 1, Section 9.2, (7)	Newly added.
		Appendix 1, Section 11.2.3	The table is partially changed.
		Appendix 1, Section 13.2	The table is partially changed.
		Appendix 1, Section 13.4.1	The table is partially changed.
		Appendix 2, Section 1.2.2, (1)	The table is partially changed.
		Appendix 2, Section 1.2.2, (2)	The table is partially changed.
		Appendix 2, Section 1.2.2, (3)	The table is partially changed.
		Appendix 2, Section 1.2.2, (4)	Partially changed.
		Appendix 2, Section 1.3, (1)	The diagram is partially changed.
		Appendix 2, Section 1.3, (2)	The diagram is partially changed.
		Appendix 2, Chapter 2, (5)	Partially changed.
		Appendix 2, Section 4.1, (1)	The table is partially changed.
		Appendix 2, Section 4.1, (2)	The table is partially changed.
		Appendix 2, Section 4.1, (3)	The table is partially changed.
		Appendix 2, Section 4.1, (4)	The table is partially changed.
		Appendix 2, Section 4.1, (5)	The table is partially changed.
		Appendix 2, Section 4.1, (13)	The table is partially changed.
		Appendix 2, Section 4.2, (2)	The table is partially changed.
		Appendix 2, Section 4.2, (13)	The table is partially changed.
		Appendix 2, Section 4.3, (1)	The table is partially changed.
		Appendix 2, Section 4.3, (2)	The table is partially changed.
		Appendix 2, Section 4.3, (3)	The table is partially changed.
		Appendix 2, Section 4.3, (4)	The table is partially changed.
		Appendix 2, Section 4.3, (5)	The table is partially changed.
		Appendix 2, Section 4.3, (6)	The table is partially changed.
		Appendix 2, Section 4.3, (7)	The table is partially changed.
		Appendix 2, Section 4.3, (8)	The table is partially changed.
		Appendix 2, Section 4.3, (9)	The table is partially changed.
		Appendix 2, Section 4.3, (10)	The table is partially changed.

Print date	*Installation guide number	Revision description	
July 2016	L(NA)03093-C	Appendix 2, Section 4.3, (11)	The table is partially changed.
		Appendix 2, Section 4.3, (12)	The table is partially changed.
		Appendix 2, Section 4.3, (13)	The table is partially changed.
		Appendix 2, Section 4.4, (4)	The table is partially changed.
		Appendix 2, Section 4.5, (4)	The table is partially changed.
		Appendix 2, Section 5.1, (1)	The diagram is partially changed.
		Appendix 2, Section 5.1, (2)	The diagram is partially changed.
		Appendix 2, Section 5.5, (1)	Partially changed.
		Appendix 2, Section 5.5, (2)	Partially changed.
		Appendix 2, Section 7.1, (1)	Partially changed.
		Appendix 2, Section 7.1, (2)	The table is partially changed.
		Appendix 2, Section 7.1, (3)	The table is partially changed.
		Appendix 2, Section 7.2	POINT is changed.
		Appendix 2, Section 7.3, (2)	The table is partially changed.
		Appendix 2, Section 7.3, (3)	The table is partially changed.
		Appendix 1, Chapter 8	The diagram is partially changed.
May 2017	L(NA)03093-D	SAFETY INSTRUCTIONS	Partially changed.
		Part 1, Section 3.2	The diagram is partially changed.
		Part 1, Section 3.2	The table is partially changed.
		Part 1, Section 3.3.2, (1)	Note 2 is changed.
		Part 1, Section 4.6	Partially changed.
		Part 2, Section 3.6.2	The table is partially changed.
		Part 2, Section 3.6.3	[PC21] is partially changed.
		Part 3, Section 2.1	The diagram is partially changed.
		Part 3, Section 2.2, (1)	The diagram is partially changed.
		Part 3, Section 2.2, (2)	The diagram is partially changed.
		Part 3, Section 2.2, (4)	POINT is partially changed.
		Part 4, Section 3.2, (1)	The table is partially changed.
		Part 4, Section 3.7	The description of [Pr. PT01] is changed.
		Part 5, Section 2.1	The diagram is partially changed.
		Part 5, Section 2.2, (2)	Partially changed.
		Part 5, Section 5.4.3, (5)	The table is partially changed.
		Part 6, Section 3.1.1	The table is partially changed.
		Part 6, Section 3.5.1, (2)	The table is partially changed.
		Part 6, Section 4.1	The diagram is partially changed.
		Part 6, Section 4.2, (1)	The diagram is partially changed.
		Part 6, Section 4.2, (2)	The diagram is partially changed.
		Part 7, Section 1.1, (1)	The table is partially changed.
		Part 7, Section 1.1, (2)	The table is partially changed.
		Part 7, Section 1.1, (3)	The table is partially changed.
		Part 7, Section 1.2.3, (2)	Partially changed.
		Part 7, Section 1.2.6, (1)	Note 5 is partially changed.
		Part 7, Section 2.3.5	POINT is partially changed.
		Part 8, Section 1.1, (1)	The table is partially changed.
		Part 8, Section 1.1, (2)	The table is partially changed.
		Part 8, Section 1.1, (3)	The table is partially changed.
		Part 8, Section 1.1, (4)	The table is partially changed.
		Part 8, Section 2.4	Partially changed.
		Part 9, Section 1.1.1	The table is partially changed.
		Part 9, Section 1.1.3	The table is partially changed.
		Part 9, Section 1.3.1	The table is partially changed.
		Part 9, Section 1.3.2	The table is partially changed.
		Part 9, Section 8.1	Partially changed.

Print date	*Installation guide number	Revision description	
May 2017	L(NA)03093-D	Part 9, Section 8.2.1	Note 5 is partially changed.
		Part 9, Section 8.3.1	The table is partially changed. Note is changed.
		Appendix 1, Section 1.1.1	The table is partially changed.
		Appendix 1, Section 2.1	The table and Note are changed. POINT is changed.
		Appendix 1, Chapter 5, (1)	All contents are revised.
		Appendix 1, Chapter 8	Note is changed.
		Appendix 1, Section 9.1	Partially changed.
		Appendix 1, Section 9.2, (1)	The table is partially changed.
		Appendix 1, Section 9.2, (8)	Newly added.
		Appendix 1, Section 13.5.1	The table is partially changed.
		Appendix 2, Section 4.1, (13)	The table is partially changed.
		Appendix 2, Section 4.2, (13)	The table is partially changed.
		Appendix 2, Section 4.4, (4)	The table is partially changed.
		Appendix 2, Section 4.5, (4)	The table is partially changed.
		Appendix 2, Section 7.1, (1)	The table is partially changed.
		Appendix 2, Section 7.1, (3)	The table is partially changed.
		Appendix 3, Section 2.2.2	Newly added.
September 2020	L(NA)03093-E	SAFETY INSTRUCTIONS	Partially changed.
		Part 1, Section 2.2	Partially changed.
		Part 1, Section 3.2	Partially changed.
		Part 1, Section 3.3.1	Partially changed.
		Part 1, Section 3.3.2	Partially changed.
		Part 1, Section 3.3.3	Partially changed.
		Part 1, Section 3.3.4	Partially changed.
		Part 1, Section 3.3.5	Partially changed.
		Part 1, Section 3.3.6	Partially changed.
		Part 1, Section 4.5	Partially changed.
		Part 2, Section 2.1	The diagram is partially changed.
		Part 2, Section 2.2	Partially changed.
		Part 2, Section 3.1	The table is partially changed.
		Part 2, Section 3.3	Partially changed.
		Part 2, Section 3.4	The table is partially changed.
		Part 2, Section 3.5	POINT is partially changed.
		Part 2, Section 3.6	POINT is partially changed.
		Part 2, Section 3.6.1	The table is partially changed.
		Part 2, Section 3.6.2	Partially changed.
		Part 2, Section 3.6.3	The table is partially changed.
		Part 2, Section 3.7	POINT is partially changed.
		Part 3, Section 2.1	The diagram is partially changed.
		Part 3, Section 2.2	The diagram is partially changed.
		Part 3, Section 3.1	The table is partially changed.
		Part 3, Section 3.1.1	The table is partially changed.
		Part 3, Section 3.5, (2)	Partially changed.
		Part 3, Section 3.6	POINT is partially changed.
		Part 3, Section 3.7	POINT is partially changed.
		Part 3, Section 3.7.1	Partially changed.
		Part 3, Section 3.7.2	The table is partially changed.
		Part 3, Section 3.8	Partially changed.
		Part 4, Section 1	Changed.
		Part 4, Section 2.1	The diagram is partially changed.
		Part 4, Section 2.2	Partially changed.

Print date	*Installation guide number	Revision description	
September 2020	L(NA)03093-E	Part 4, Section 3.1	POINT is partially changed.
		Part 4, Section 3.1, (1)	The table is partially changed.
		Part 4, Section 3.1, (2)	The table is partially changed.
		Part 4, Section 3.2, (1)	Partially changed.
		Part 4, Section 3.4, (2)	Partially changed.
		Part 4, Section 3.5	POINT is partially changed.
		Part 4, Section 3.6	POINT is partially changed.
		Part 4, Section 3.6.1, (1)	The table is partially changed.
		Part 4, Section 3.6.2	The table is partially changed.
		Part 4, Section 3.6.3	The table is partially changed.
		Part 4, Section 3.7	POINT is partially changed.
			Partially changed.
		Part 5, Section 1.2	POINT is partially changed.
			Partially changed.
		Part 5, Section 1.3	Partially changed.
			The diagram is partially changed.
		Part 5, Section 1.4	Partially changed.
		Part 5, Section 2.1	POINT is partially changed.
			The diagram is partially changed.
		Part 5, Section 2.2	Partially changed.
			The diagram is partially changed.
		Part 5, Section 2.3	The diagram is partially changed.
		Part 5, Section 3.1	POINT is partially changed.
			The table is partially changed.
		Part 5, Section 4.1	Partially changed.
		Part 5, Section 4.2	Partially changed.
		Part 5, Section 5.1	The table is partially changed.
		Part 5, Section 5.2	POINT is partially changed.
		Part 5, Section 5.2.1	The diagram is partially changed.
		Part 5, Section 5.2.2	The diagram is partially changed.
		Part 5, Section 5.3.1	The table is partially changed.
		Part 5, Section 5.3.2	The table is partially changed.
		Part 5, Section 5.4.3	The diagram is partially changed.
			Partially changed.
		Part 5, Section 5.5	POINT is partially changed.
		Part 6, Section 2.2	The table is partially changed.
		Part 6, Section 3.3.1	The table is partially changed.
		Part 6, Section 3.3, (1)	The diagram is partially changed.
		Part 6, Section 3.4	POINT is partially changed.
		Part 6, Section 3.5.1	POINT is partially changed.
		Part 6, Section 3.5.1, (1)	The table is partially changed.
		Part 6, Section 3.5.1, (2)	The table is partially changed.
		Part 6, Section 4.1	The diagram is partially changed.
		Part 6, Section 4.2	Partially changed.
		Part 6, Section 4.3	Partially changed.
		Part 6, Section 4.5	Partially changed.
		Part 6, Section 4.6	POINT is partially changed.
		Part 6, Section 4.7.1	POINT is partially changed.
			The table is partially changed.
		Part 7, Section 1.1	The table is partially changed.
		Part 7, Section 1.2	Partially changed.
			The table is partially changed.
		Part 7, Section 1.2.3	The table is partially changed.

Print date	*Installation guide number	Revision description	
September 2020	L(NA)03093-E	Part 7, Section 1.2.4	The table is partially changed.
		Part 7, Section 1.2.5	Partially changed.
		Part 7, Section 1.2.6	The table is partially changed.
		Part 7, Section 1.2.7	Partially changed.
		Part 7, Section 1.2.8	Partially changed.
			The diagram is partially changed.
		Part 7, Section 1.2.9	Partially changed.
		Part 7, Section 2.1.1	Partially changed.
		Part 7, Section 2.1.2	Partially changed.
		Part 7, Section 2.1.3	The table is partially changed.
		Part 7, Section 2.1.4	Partially changed.
		Part 7, Section 2.1.5	Partially changed.
		Part 7, Section 2.1.6	Partially changed.
		Part 7, Section 2.1.6	Partially changed.
		Part 7, Section 2.2	The table is partially changed.
		Part 7, Section 2.3.5	POINT is partially changed.
			The table is partially changed.
		Part 7, Section 2.4.3	The table is partially changed.
		Part 7, Section 4	POINT is partially changed.
		Part 7, Section 4.2	The table is partially changed.
		Part 7, Section 4.3	Partially changed.
		Part 8, Section 1.1	POINT is partially changed.
			The table is partially changed.
		Part 8, Section 2.1	The table is partially changed.
		Part 8, Section 2.3	Partially changed.
		Part 8, Section 2.4.1	Partially changed.
		Part 8, Section 2.4.2	Partially changed.
			The table is partially changed.
		Part 8, Section 2.5	Partially changed.
		Part 8, Section 2.6	Partially changed.
		Part 8, Section 2.7	Partially changed.
		Part 9, Section 1	POINT is partially changed.
			Partially changed.
		Part 9, Section 1.1.1	The table is partially changed.
		Part 9, Section 1.1.3	The table is partially changed.
		Part 9, Section 1.2	The table is partially changed.
		Part 9, Section 1.3.1	The table is partially changed.
		Part 9, Section 1.3.2	The table is partially changed.
		Part 9, Section 2	The table is partially changed.
		Part 9, Section 3	The table is partially changed.
		Part 9, Section 4	POINT is partially changed.
		Part 9, Section 4.1.1	Partially changed.
			The table is partially changed.
		Part 9, Section 4.1.2	The table is partially changed.
		Part 9, Section 4.2.1	Partially changed.
		Part 9, Section 4.2.2	Partially changed.
		Part 9, Section 4.3.1	The table is partially changed.
		Part 9, Section 4.3.2	The table is partially changed.
		Part 9, Section 5.3.1	WARNING is partially changed.
			POINT is partially changed.
		Part 9, Section 5.3.4	Partially changed.
		Part 9, Section 6.1	Partially changed.
		Part 9, Section 6.3	The table is partially changed.

Print date	*Installation guide number	Revision description	
September 2020	L(NA)03093-E	Part 9, Section 6.3.1	Partially changed.
		Part 9, Section 6.4.1	The table is partially changed.
		Part 9, Section 6.4.1	Partially changed.
		Part 9, Section 7.1	Partially changed.
		Part 9, Section 7.3	The diagram is partially changed.
		Part 9, Section 7.5	Partially changed.
		Part 9, Section 7.6	Partially changed.
		Part 9, Section 7.6	Partially changed.
		Part 9, Section 7.8	The diagram is partially changed.
		Part 9, Section 8.2.1	The table is partially changed.
		Part 10, Section 1.1.1	Partially changed.
		Appendix 1, Section 1	Partially changed.
		Appendix 1, Section 1.1.2	Partially changed.
		Appendix 1, Section 2.1	The table is partially changed.
			POINT is partially changed.
		Appendix 1, Section 3	Partially changed.
		Appendix 1, Section 4	Partially changed.
		Appendix 1, Section 5	Partially changed.
		Appendix 1, Section 7	The table is partially changed.
		Appendix 1, Section 8	The table is partially changed.
		Appendix 1, Section 9	Partially changed.
			POINT is partially changed.
		Appendix 1, Section 9.2	The table is partially changed.
			POINT is partially changed.
			Partially changed.
		Appendix 1, Section 10.1	Partially changed.
		Appendix 1, Section 11.1	Partially changed.
		Appendix 1, Section 11.2	Partially changed.
		Appendix 1, Section 11.2.3	The table is partially changed.
		Appendix 1, Section 13.5.1	Partially changed.
			The table is partially changed.
		Appendix 1, Section 13.6	The table is partially changed.
		Appendix 2, Section 1.2	Partially changed.
		Appendix 2, Section 1.2.2	The table is partially changed.
		Appendix 2, Section 1.3	Partially changed.
		Appendix 2, Section 1.4	Partially changed.
		Appendix 2, Section 2	Partially changed.
		Appendix 2, Section 3	The diagram is partially changed.
		Appendix 2, Section 3.2.1	CAUTION is partially changed.
			Partially changed.
		Appendix 2, Section 4.1	The table is partially changed.
			Partially changed.
		Appendix 2, Section 5.1	The diagram is partially changed.
		Appendix 2, Section 5.3	The diagram is partially changed.
		Appendix 2, Section 5.4	The diagram is partially changed.
		Appendix 2, Section 5.5	The diagram is partially changed.
		Appendix 2, Section 5.6	The diagram is partially changed.
		Appendix 2, Section 5.7	The diagram is partially changed.
		Appendix 2, Section 5.8	The diagram is partially changed.
		Appendix 2, Section 6.1	The table is partially changed.
		Appendix 2, Section 6.2	The table is partially changed.
		Appendix 2, Section 6.2	Partially changed.
			The table is partially changed.

Print date	*Installation guide number	Revision description	
September 2020	L(NA)03093-E	Appendix 2, Section 7.1	Partially changed.
		Appendix 2, Section 7.1	The table is partially changed.
		Appendix 2, Section 7.2	POINT is partially changed.
		Appendix 2, Section 7.3	Partially changed.
			The table is partially changed.
		Appendix 2, Section 8.2.1	Partially changed.
		Appendix 2, Section 8.2.2	Partially changed.

This installation guide guarantees no industrial rights or implementation of any rights of any other kind, nor does it grant any licenses. Mitsubishi Electric Corporation cannot be held responsible for any problems involving industrial rights which may occur as a result of using the contents noted in this installation guide.

© 2013 MITSUBISHI ELECTRIC CORPORATION

MEMO

Extensive global support coverage providing expert help whenever needed

■ Global FA centers

EMEA

Europe FA Center
MITSUBISHI ELECTRIC EUROPE B.V. Polish Branch
Tel: +48-12-347-65-00

Germany FA Center
MITSUBISHI ELECTRIC EUROPE B.V.
German Branch
Tel: +49-2102-486-0

UK FA Center
MITSUBISHI ELECTRIC EUROPE B.V. UK Branch
Tel: +44-1707-27-8780

Czech Republic FA Center
MITSUBISHI ELECTRIC EUROPE B.V. Czech Branch
Tel: +420-255 719 200

Italy FA Center
MITSUBISHI ELECTRIC EUROPE B.V. Italian Branch
Tel: +39-039-60531

Russia FA Center
MITSUBISHI ELECTRIC (RUSSIA) LLC
St. Petersburg Branch
Tel: +7-812-633-3497

Turkey FA Center
MITSUBISHI ELECTRIC TURKEY A.S.
Umraniye Branch
Tel: +90-216-526-3990

Asia-Pacific

China

Beijing FA Center
MITSUBISHI ELECTRIC AUTOMATION (CHINA) LTD.
Beijing FA Center
Tel: +86-10-6518-8830

Guangzhou FA Center
MITSUBISHI ELECTRIC AUTOMATION (CHINA) LTD.
Guangzhou FA Center
Tel: +86-20-8923-6730

Shanghai FA Center
MITSUBISHI ELECTRIC AUTOMATION (CHINA) LTD.
Shanghai FA Center
Tel: +86-21-2322-3030

Tianjin FA Center
MITSUBISHI ELECTRIC AUTOMATION (CHINA) LTD.
Tianjin FA Center
Tel: +86-22-2813-1015

Taiwan

Taipei FA Center
SETSUYO ENTERPRISE CO., LTD.
Tel: +886-2-2299-9917

Korea

Korea FA Center
MITSUBISHI ELECTRIC AUTOMATION
KOREA CO., LTD.
Tel: +82-2-3660-9630

Thailand

Thailand FA Center
MITSUBISHI ELECTRIC FACTORY AUTOMATION
(THAILAND) CO., LTD.
Tel: +66-2682-6522 to 31

ASEAN

ASEAN FA Center
MITSUBISHI ELECTRIC ASIA PTE. LTD.
Tel: +65-6470-2475

Indonesia

Indonesia FA Center
PT. MITSUBISHI ELECTRIC INDONESIA
Cikarang Office
Tel: +62-21-2961-7797

Vietnam

Hanoi FA Center
MITSUBISHI ELECTRIC VIETNAM COMPANY
LIMITED Hanoi Branch Office
Tel: +84-24-3937-8075

Ho Chi Minh FA Center
MITSUBISHI ELECTRIC VIETNAM COMPANY
LIMITED
Tel: +84-28-3910-5945

India

India Ahmedabad FA Center
MITSUBISHI ELECTRIC INDIA PVT. LTD.
Ahmedabad Branch
Tel: +91-7965120063

India Bangalore FA Center
MITSUBISHI ELECTRIC INDIA PVT. LTD.
Bangalore Branch
Tel: +91-80-4020-1600

India Chennai FA Center
MITSUBISHI ELECTRIC INDIA PVT. LTD.
Chennai Branch
Tel: +91-4445548772

India Gurgaon FA Center
MITSUBISHI ELECTRIC INDIA PVT. LTD.
Gurgaon Head Office
Tel: +91-124-463-0300

India Pune FA Center
MITSUBISHI ELECTRIC INDIA PVT. LTD.
Pune Branch
Tel: +91-20-2710-2000

Americas

USA

North America FA Center
MITSUBISHI ELECTRIC AUTOMATION, INC.
Tel: +1-847-478-2100

Mexico

Mexico City FA Center
MITSUBISHI ELECTRIC AUTOMATION, INC.
Mexico Branch
Tel: +52-55-3067-7511

Mexico FA Center
MITSUBISHI ELECTRIC AUTOMATION, INC.
Queretaro Office
Tel: +52-442-153-6014

Mexico Monterrey FA Center
MITSUBISHI ELECTRIC AUTOMATION, INC.
Monterrey Office
Tel: +52-55-3067-7521

Brazil

Brazil FA Center
MITSUBISHI ELECTRIC DO BRASIL COMERCIO E
SERVIC OS LTDA.
Tel: +55-11-4689-3000

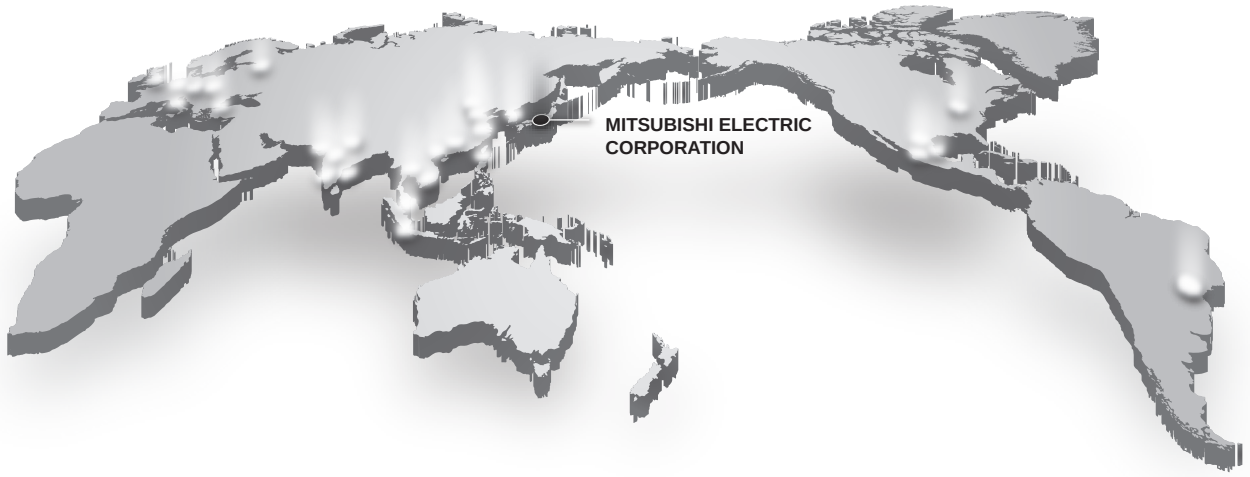

Transition from MELSERVO-J2-Super/J2M Series to J4 Series Handbook

Country/Region	Sales office	
USA	Mitsubishi Electric Automation, Inc. 500 Corporate Woods Parkway, Vernon Hills, IL 60061, U.S.A.	Tel : +1-847-478-2100
Mexico	Mitsubishi Electric Automation, Inc. Mexico Branch Boulevard Miguel de Cervantes Saavedra 301, Torre Norte Piso 5, Ampliacion Granada, Miguel Hidalgo, Ciudad de Mexico, Mexico, C.P.11520	Tel : +52-55-3067-7512
Brazil	Mitsubishi Electric do Brasil Comercio e Servicos Ltda. Avenida Adelino Cardana, 293, 21 andar, Bethaville, Barueri SP, Brazil	Tel : +55-11-4689-3000
Germany	Mitsubishi Electric Europe B.V. German Branch Mitsubishi-Electric-Platz 1, 40882 Ratingen, Germany	Tel : +49-2102-486-0
UK	Mitsubishi Electric Europe B.V. UK Branch Travellers Lane, UK-Hatfield, Hertfordshire, AL10 8XB, U.K.	Tel : +44-1707-28-8780
Italy	Mitsubishi Electric Europe B.V. Italian Branch Centro Direzionale Colleoni - Palazzo Sirio, Viale Colleoni 7, 20864 Agrate Brianza (MB), Italy	Tel : +39-039-60531
Spain	Mitsubishi Electric Europe B.V. Spanish Branch Carretera de Rubi, 76-80-Apdo. 420, E-08190 Sant Cugat del Valles (Barcelona), Spain	Tel : +34-935-65-3131
France	Mitsubishi Electric Europe B.V. French Branch 25, Boulevard des Bouvets, 92741 Nanterre Cedex, France	Tel : +33-1-55-68-55-68
Czech Republic	Mitsubishi Electric Europe B.V. Czech Branch, Prague Office Pekarska 621/7, 155 00 Praha 5, Czech Republic	Tel : +420-255-719-200
Poland	Mitsubishi Electric Europe B.V. Polish Branch ul. Krakowska 48, 32-083 Balice, Poland	Tel : +48-12-347-65-00
Russia	Mitsubishi Electric (Russia) LLC St. Petersburg Branch Piskarevsky pr. 2, bld 2, lit "Sch", BC "Benua", office 720; 195027 St. Petersburg, Russia	Tel : +7-812-633-3497
Sweden	Mitsubishi Electric Europe B.V. (Scandinavia) Hedvig Mollersgata 6, 223 55 Lund, Sweden	Tel : +46-8-625-10-00
Turkey	Mitsubishi Electric Turkey A.S. Umraniye Branch Serifali Mahallesi Nutuk Sokak No:5, TR-34775 Umraniye / Istanbul, Turkey	Tel : +90-216-526-3990
UAE	Mitsubishi Electric Europe B.V. Dubai Branch Dubai Silicon Oasis, P.O.BOX 341241, Dubai, U.A.E.	Tel : +971-4-3724716
South Africa	Adroit Technologies 20 Waterford Office Park, 189 Witkoppen Road, Fourways, South Africa	Tel : +27-11-658-8100
China	Mitsubishi Electric Automation (China) Ltd. Mitsubishi Electric Automation Center, No.1386 Hongqiao Road, Shanghai, China	Tel : +86-21-2322-3030
Taiwan	SETSUYO ENTERPRISE CO., LTD. 6F, No.105, Wugong 3rd Road, Wugu District, New Taipei City 24889, Taiwan	Tel : +886-2-2299-2499
Korea	Mitsubishi Electric Automation Korea Co., Ltd. 7F to 9F, Gangseo Hangang Xi-tower A, 401, Yangcheon-ro, Gangseo-Gu, Seoul 07528, Korea	Tel : +82-2-3660-9529
Singapore	Mitsubishi Electric Asia Pte. Ltd. 307 Alexandra Road, Mitsubishi Electric Building, Singapore 159943	Tel : +65-6473-2308
Thailand	Mitsubishi Electric Factory Automation (Thailand) Co., Ltd. 101, True Digital Park Office, 5th Floor, Sukhumvit Road, Bangchak, Phra Khanong, Bangkok	Tel : +66-2092-8600
Indonesia	PT. Mitsubishi Electric Indonesia Gedung Jaya 8th Floor, JL. MH. Thamrin No.12, Jakarta Pusat 10340, Indonesia	Tel : +62-21-3192-6461
Vietnam	Mitsubishi Electric Vietnam Company Limited 11th & 12th Floor, Viettel Tower B, 285 Cach Mang Thang 8 Street, Ward 12, District 10, Ho Chi Minh City, Vietnam	Tel : +84-28-3910-5945
India	Mitsubishi Electric India Pvt. Ltd. Pune Branch Emerald House, EL-3, J Block, M.I.D.C., Bhosari, Pune - 411026, Maharashtra, India	Tel : +91-20-2710-2000
Australia	Mitsubishi Electric Australia Pty. Ltd. 348 Victoria Road, P.O. Box 11, Rydalmere, N.S.W 2116, Australia	Tel : +61-2-9684-7777

MITSUBISHI ELECTRIC CORPORATION

HEAD OFFICE: TOKYO BUILDING, 2-7-3, MARUNOUCHI, CHIYODA-KU, TOKYO 100-8310, JAPAN
NAGOYA WORKS: 1-14, YADA-MINAMI 5, HIGASHI-KU, NAGOYA, JAPAN

L(NA)03093-E

New publication, effective Sertember 2020.
Specifications are subject to change without notice.