| 形名 | AZ-B21500BM/8 AHZF | 電源 | |
|---|---|---|---|
| 出力 | 連調調色 | 温度 | |
| モード | 森の昼空*フレーム部50% | | |
| オプション1 | | | |
| オプション2 | | | |
| オプション3 | | | |
| オプション4 | | | |
| オプション5 | | | |

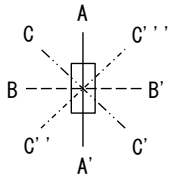


○配光曲線図(cd/1000lm)

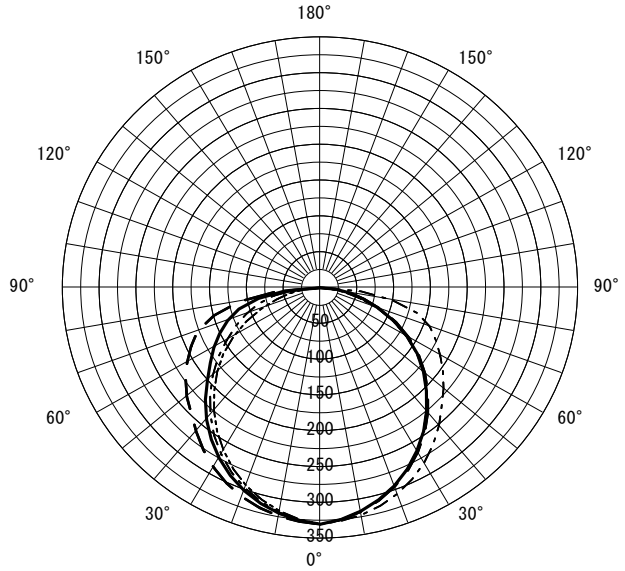


○諸特性

| 光源 | | LED | | | | |
|---|---|---|---|---|---|---|
| 最大取付間隔 | 高さ | H | | | | |
| | A-A' | 0.0 H | | | | |
| | B-B' | 0.0 H | | | | |
| 器具効率 | | 上方光束 | | 下方光束 | | 計 |
| | | 0.0% | | 100.0% | | 100.0% |
| 保守率 | 良い | 0.810 | 普通 | 0.770 | 悪い | 0.680 |

○直射水平面照度 (全光束：0 × 1 = 0lm/台)

照度(lx) ── H1.50m --- H2.00m —·— H2.50m —··—·H3.00m (保守率：1.00)

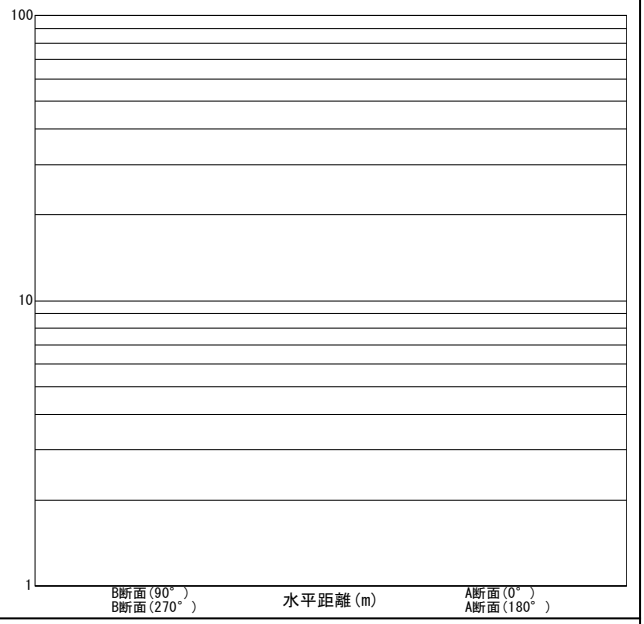


| 反射率(%) | | | | | | | | | | | | | | | | | | | | | | | | | | | | | | | | | | |
|---|---|---|---|---|---|---|---|---|---|---|---|---|---|---|---|---|---|---|---|---|---|---|---|---|---|---|---|---|---|---|---|---|---|---|
| 天井 | 80 | | | | | | | | 70 | | | | | | | | 50 | | | | | | | | 30 | | | | | | | | 20 | 0 |
| 壁 | 70 | | 50 | | 30 | | 10 | | 70 | | 50 | | 30 | | 10 | | 70 | | 50 | | 30 | | 10 | | 70 | | 50 | | 30 | | 10 | | 10 | 0 |
| 床 | 30 | 10 | 30 | 10 | 30 | 10 | 30 | 10 | 30 | 10 | 30 | 10 | 30 | 10 | 30 | 10 | 30 | 10 | 30 | 10 | 30 | 10 | 30 | 10 | 30 | 10 | 30 | 10 | 30 | 10 | 30 | 10 | 10 | 0 |
| 室指数 | 作業面照明率(×0.01) | | | | | | | | | | | | | | | | | | | | | | | | | | | | | | | | | |
| 0.60 | 61 | 56 | 46 | 44 | 37 | 36 | 31 | 30 | 59 | 55 | 45 | 43 | 36 | 35 | 30 | 30 | 56 | 52 | 44 | 42 | 36 | 35 | 30 | 30 | 53 | 50 | 42 | 41 | 35 | 34 | 30 | 30 | 30 | 28 |
| 0.80 | 73 | 66 | 58 | 54 | 48 | 46 | 41 | 40 | 70 | 64 | 56 | 53 | 47 | 46 | 41 | 40 | 66 | 62 | 54 | 52 | 46 | 45 | 40 | 40 | 62 | 59 | 52 | 51 | 45 | 44 | 40 | 39 | 39 | 37 |
| 1.00 | 81 | 72 | 66 | 61 | 56 | 53 | 49 | 47 | 78 | 71 | 65 | 60 | 55 | 53 | 49 | 47 | 73 | 68 | 62 | 59 | 54 | 52 | 48 | 47 | 69 | 65 | 60 | 57 | 53 | 51 | 47 | 46 | 46 | 44 |
| 1.25 | 88 | 78 | 74 | 68 | 65 | 61 | 57 | 55 | 85 | 77 | 73 | 67 | 64 | 60 | 57 | 54 | 80 | 74 | 69 | 65 | 62 | 59 | 56 | 54 | 75 | 71 | 67 | 64 | 60 | 58 | 55 | 54 | 53 | 51 |
| 1.50 | 94 | 83 | 81 | 73 | 71 | 66 | 64 | 60 | 91 | 81 | 79 | 72 | 70 | 65 | 63 | 60 | 85 | 78 | 75 | 70 | 68 | 64 | 62 | 59 | 79 | 75 | 72 | 68 | 65 | 63 | 60 | 59 | 59 | 56 |
| 2.00 | 102 | 88 | 90 | 81 | 81 | 74 | 74 | 69 | 98 | 87 | 88 | 79 | 80 | 73 | 73 | 68 | 91 | 83 | 83 | 77 | 76 | 72 | 71 | 68 | 86 | 81 | 79 | 75 | 73 | 71 | 69 | 67 | 66 | 64 |
| 2.50 | 107 | 92 | 97 | 85 | 88 | 80 | 82 | 75 | 103 | 90 | 94 | 84 | 86 | 79 | 80 | 74 | 96 | 87 | 89 | 82 | 83 | 77 | 77 | 73 | 90 | 84 | 84 | 80 | 79 | 76 | 75 | 72 | 72 | 70 |
| 3.00 | 110 | 95 | 101 | 89 | 94 | 84 | 88 | 79 | 106 | 93 | 98 | 88 | 92 | 83 | 86 | 79 | 99 | 90 | 93 | 85 | 87 | 81 | 82 | 78 | 93 | 87 | 88 | 83 | 83 | 80 | 79 | 76 | 76 | 74 |
| 4.00 | 115 | 98 | 108 | 93 | 101 | 89 | 96 | 85 | 111 | 96 | 104 | 92 | 99 | 88 | 94 | 85 | 103 | 93 | 98 | 90 | 93 | 86 | 89 | 83 | 97 | 91 | 93 | 88 | 89 | 85 | 86 | 82 | 81 | 79 |
| 5.00 | 118 | 100 | 112 | 96 | 106 | 93 | 101 | 89 | 114 | 99 | 108 | 95 | 103 | 92 | 99 | 89 | 106 | 96 | 102 | 93 | 98 | 90 | 94 | 87 | 99 | 93 | 96 | 90 | 93 | 88 | 90 | 86 | 85 | 83 |
| 7.00 | 122 | 102 | 117 | 99 | 113 | 97 | 109 | 94 | 117 | 101 | 113 | 98 | 109 | 96 | 106 | 93 | 109 | 98 | 106 | 96 | 103 | 94 | 100 | 92 | 102 | 96 | 99 | 94 | 97 | 92 | 95 | 90 | 89 | 87 |
| 10.00 | 125 | 104 | 121 | 102 | 118 | 100 | 115 | 98 | 120 | 103 | 117 | 101 | 114 | 99 | 111 | 97 | 111 | 100 | 109 | 99 | 107 | 97 | 105 | 95 | 104 | 98 | 102 | 96 | 101 | 95 | 99 | 94 | 93 | 91 |

JIS C 8030:2014

三菱電機照明株式会社