| 形名 | AZ-B21501BM/8 AHZS | 電源 | |
|---|---|---|---|
| 出力 | 連調調色 | 温度 | |
| モード | 海の昼空*フレーム部75% | | |
| オプション1 | AZ-XTK0001 | | |
| オプション2 | | | |
| オプション3 | | | |
| オプション4 | | | |
| オプション5 | | | |

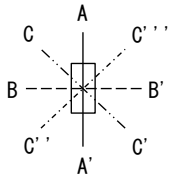


○諸特性

| 光源 | | LED | | | | | |
|---|---|---|---|---|---|---|---|
| 最大取付間隔 | 高さ | H | | | | | |
| | A-A' | 0.0 H | | | | | |
| | B-B' | 0.0 H | | | | | |
| 器具効率 | | 上方光束 | | 下方光束 | | 計 | |
| | | 0.0% | | 100.0% | | 100.0% | |
| 保守率 | | 良い | 0.810 | 普通 | 0.770 | 悪い | 0.680 |

○配光曲線図(cd/1000lm)

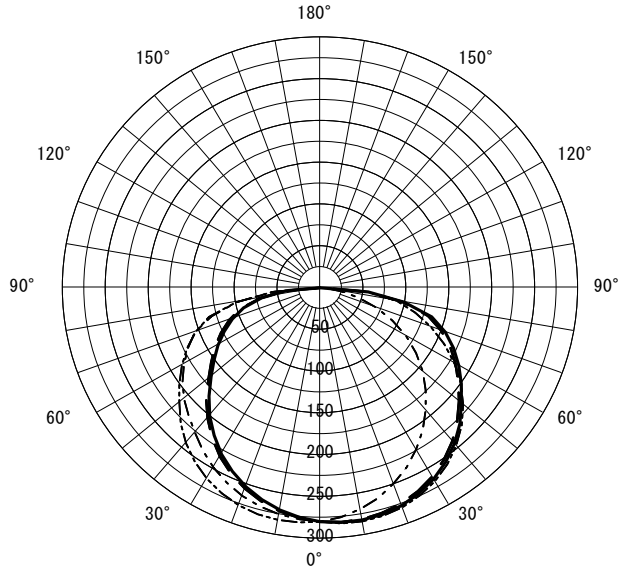


○直射水平面照度 (全光束：0 × 1 = 0lm/台)

照度(lx) ── H1.50m --- H2.00m —·— H2.50m —··— H3.00m (保守率：1.00)

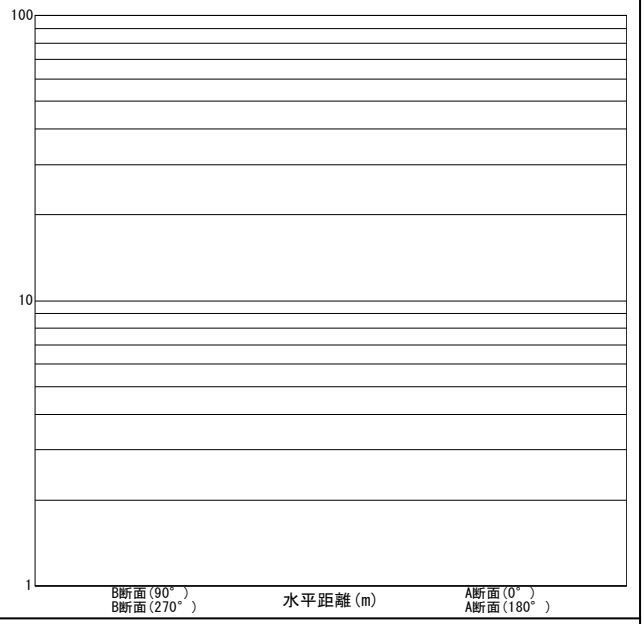


| 反射率(%) | | | | | | | | | | | | | | | | | | | | | | | | | | | | | | | | | | |
|---|---|---|---|---|---|---|---|---|---|---|---|---|---|---|---|---|---|---|---|---|---|---|---|---|---|---|---|---|---|---|---|---|---|---|
| 天井 | 80 | | | | | | | | 70 | | | | | | | | 50 | | | | | | | | 30 | | | | | | | | 20 | 0 |
| 壁 | 70 | | 50 | | 30 | | 10 | | 70 | | 50 | | 30 | | 10 | | 70 | | 50 | | 30 | | 10 | | 70 | | 50 | | 30 | | 10 | | 10 | 0 |
| 床 | 30 | 10 | 30 | 10 | 30 | 10 | 30 | 10 | 30 | 10 | 30 | 10 | 30 | 10 | 30 | 10 | 30 | 10 | 30 | 10 | 30 | 10 | 30 | 10 | 30 | 10 | 30 | 10 | 30 | 10 | 30 | 10 | 10 | 0 |
| 室指数 | 作業面照明率(×0.01) | | | | | | | | | | | | | | | | | | | | | | | | | | | | | | | | | |
| 0.60 | 59 | 54 | 43 | 41 | 34 | 33 | 28 | 27 | 57 | 53 | 43 | 41 | 34 | 33 | 28 | 27 | 54 | 50 | 41 | 40 | 33 | 32 | 27 | 27 | 51 | 48 | 40 | 38 | 32 | 32 | 27 | 27 | 27 | 25 |
| 0.80 | 70 | 64 | 55 | 52 | 45 | 43 | 38 | 37 | 68 | 62 | 54 | 51 | 44 | 43 | 38 | 37 | 64 | 59 | 52 | 49 | 43 | 42 | 37 | 37 | 60 | 57 | 50 | 48 | 42 | 41 | 37 | 36 | 36 | 34 |
| 1.00 | 78 | 71 | 63 | 59 | 53 | 50 | 46 | 44 | 76 | 69 | 62 | 58 | 52 | 50 | 45 | 44 | 71 | 66 | 59 | 56 | 51 | 49 | 44 | 43 | 67 | 63 | 57 | 55 | 49 | 48 | 44 | 43 | 43 | 41 |
| 1.25 | 86 | 77 | 72 | 66 | 61 | 58 | 54 | 51 | 83 | 75 | 70 | 65 | 60 | 57 | 53 | 51 | 78 | 71 | 67 | 63 | 59 | 56 | 52 | 51 | 73 | 68 | 64 | 61 | 57 | 55 | 51 | 50 | 50 | 48 |
| 1.50 | 92 | 81 | 78 | 71 | 68 | 63 | 60 | 57 | 88 | 79 | 76 | 70 | 67 | 63 | 60 | 57 | 82 | 76 | 72 | 68 | 64 | 61 | 58 | 56 | 77 | 73 | 69 | 66 | 62 | 60 | 57 | 56 | 55 | 53 |
| 2.00 | 100 | 87 | 88 | 78 | 78 | 71 | 71 | 66 | 96 | 85 | 85 | 77 | 77 | 71 | 70 | 65 | 89 | 82 | 81 | 75 | 74 | 69 | 68 | 65 | 84 | 79 | 77 | 73 | 71 | 68 | 66 | 64 | 63 | 61 |
| 2.50 | 105 | 91 | 94 | 83 | 86 | 77 | 79 | 72 | 101 | 89 | 92 | 82 | 84 | 76 | 77 | 71 | 94 | 86 | 86 | 80 | 80 | 75 | 74 | 70 | 88 | 83 | 82 | 78 | 76 | 73 | 72 | 70 | 69 | 67 |
| 3.00 | 109 | 93 | 99 | 87 | 91 | 81 | 85 | 77 | 105 | 92 | 96 | 86 | 89 | 81 | 83 | 76 | 97 | 88 | 91 | 83 | 85 | 79 | 80 | 75 | 91 | 85 | 86 | 81 | 81 | 77 | 77 | 74 | 73 | 71 |
| 4.00 | 114 | 97 | 106 | 92 | 99 | 87 | 93 | 83 | 110 | 95 | 103 | 91 | 97 | 86 | 91 | 82 | 102 | 92 | 96 | 88 | 91 | 84 | 87 | 81 | 95 | 89 | 91 | 86 | 87 | 83 | 83 | 80 | 79 | 77 |
| 5.00 | 117 | 99 | 110 | 95 | 105 | 91 | 99 | 87 | 113 | 98 | 107 | 94 | 101 | 90 | 97 | 87 | 105 | 95 | 100 | 91 | 96 | 88 | 92 | 85 | 98 | 92 | 94 | 89 | 91 | 86 | 88 | 84 | 83 | 81 |
| 7.00 | 121 | 102 | 116 | 99 | 111 | 95 | 107 | 93 | 116 | 100 | 112 | 97 | 108 | 94 | 104 | 92 | 108 | 97 | 105 | 95 | 101 | 93 | 98 | 90 | 101 | 95 | 98 | 93 | 96 | 91 | 93 | 89 | 88 | 86 |
| 10.00 | 124 | 104 | 120 | 101 | 117 | 99 | 113 | 97 | 119 | 102 | 116 | 100 | 113 | 98 | 110 | 96 | 111 | 100 | 108 | 98 | 106 | 96 | 103 | 94 | 103 | 97 | 101 | 96 | 100 | 94 | 98 | 93 | 92 | 90 |

JIS C 8030:2014

三菱電機照明株式会社