| 形名 | EL-SL20021W/W 1HN | 電源 | |
|---|---|---|---|
| 出力 | 固定出力 | 温度 | |
| モード | 定格 | | |
| オプション1 | EL-X112 | | |
| オプション2 | | | |
| オプション3 | | | |
| オプション4 | | | |
| オプション5 | | | |

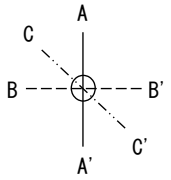


○諸特性

| 光源 | | LED | | | | |
|---|---|---|---|---|---|---|
| 最大取付間隔 | 高さ | H | | | | |
| | A-A' | 0.3 H | | | | |
| | B-B' | 0.3 H | | | | |
| 器具効率 | | 上方光束 | | 下方光束 | | 計 |
| | | 0.0% | | 100.0% | | 100.0% |
| 保守率 | 良い | 0.670 | 普通 | 0.630 | 悪い | 0.560 |

○配光曲線図(cd/1000lm)

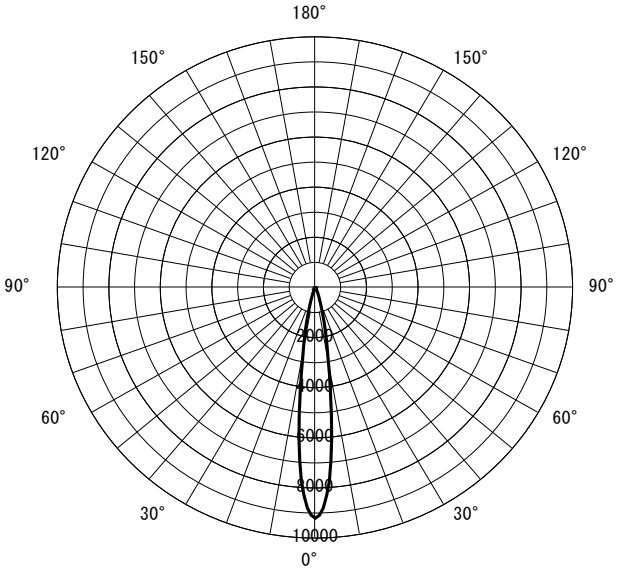


○直射水平面照度　　(全光束：2080 × 1 = 2080lm/台)

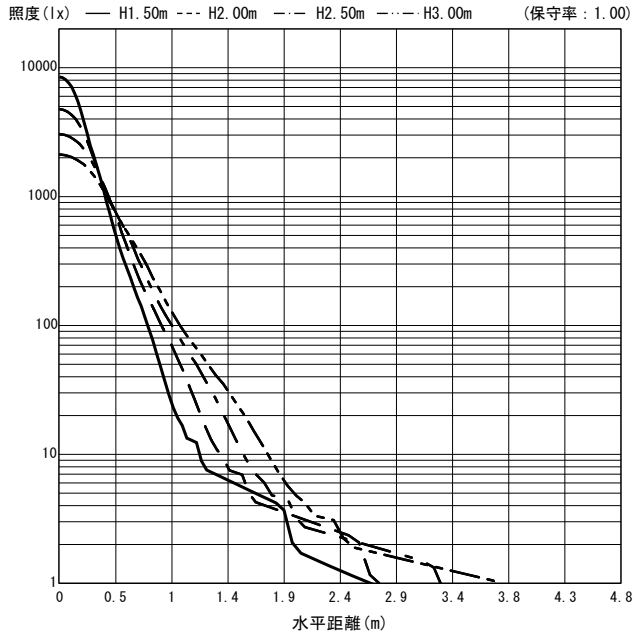


| 反射率(%) | | | | | | | | | | | | | | | | | | | | | | | | | | | | | | | | | | |
|---|---|---|---|---|---|---|---|---|---|---|---|---|---|---|---|---|---|---|---|---|---|---|---|---|---|---|---|---|---|---|---|---|---|---|
| 天井 | 80 | | | | | | | | 70 | | | | | | | | 50 | | | | | | | | 30 | | | | | | | | 20 | 0 |
| 壁 | 70 | | 50 | | 30 | | 10 | | 70 | | 50 | | 30 | | 10 | | 70 | | 50 | | 30 | | 10 | | 70 | | 50 | | 30 | | 10 | | 10 | 0 |
| 床 | 30 | 10 | 30 | 10 | 30 | 10 | 30 | 10 | 30 | 10 | 30 | 10 | 30 | 10 | 30 | 10 | 30 | 10 | 30 | 10 | 30 | 10 | 30 | 10 | 30 | 10 | 30 | 10 | 30 | 10 | 30 | 10 | 10 | 0 |
| 室指数 | 作業面照明率(×0.01) | | | | | | | | | | | | | | | | | | | | | | | | | | | | | | | | | |
| 0.60 | 104 | 96 | 97 | 92 | 92 | 90 | 89 | 88 | 103 | 95 | 96 | 92 | 92 | 90 | 89 | 88 | 100 | 94 | 95 | 91 | 91 | 89 | 89 | 88 | 99 | 93 | 94 | 91 | 91 | 89 | 88 | 88 | 88 | 87 |
| 0.80 | 109 | 99 | 102 | 95 | 97 | 93 | 94 | 91 | 107 | 98 | 101 | 95 | 96 | 93 | 93 | 91 | 104 | 97 | 99 | 94 | 95 | 92 | 93 | 91 | 102 | 96 | 97 | 94 | 94 | 92 | 92 | 91 | 91 | 90 |
| 1.00 | 112 | 101 | 105 | 98 | 100 | 95 | 97 | 94 | 110 | 100 | 104 | 97 | 100 | 95 | 97 | 94 | 107 | 99 | 102 | 96 | 98 | 95 | 95 | 93 | 103 | 98 | 99 | 96 | 96 | 94 | 94 | 93 | 93 | 92 |
| 1.25 | 115 | 102 | 109 | 100 | 104 | 98 | 101 | 96 | 113 | 102 | 107 | 99 | 103 | 97 | 100 | 96 | 109 | 100 | 104 | 98 | 101 | 96 | 98 | 95 | 105 | 99 | 101 | 97 | 99 | 96 | 96 | 95 | 94 | 93 |
| 1.50 | 117 | 103 | 111 | 101 | 107 | 99 | 103 | 98 | 115 | 103 | 109 | 100 | 105 | 99 | 102 | 97 | 110 | 101 | 106 | 99 | 103 | 98 | 100 | 97 | 106 | 100 | 103 | 98 | 100 | 97 | 98 | 96 | 96 | 95 |
| 2.00 | 121 | 105 | 115 | 103 | 111 | 101 | 108 | 100 | 118 | 104 | 113 | 102 | 109 | 101 | 106 | 99 | 112 | 102 | 108 | 101 | 106 | 100 | 103 | 98 | 107 | 101 | 105 | 100 | 102 | 99 | 100 | 98 | 97 | 96 |
| 2.50 | 123 | 106 | 118 | 104 | 114 | 103 | 111 | 101 | 119 | 105 | 115 | 103 | 112 | 102 | 109 | 101 | 113 | 103 | 110 | 102 | 108 | 101 | 105 | 100 | 108 | 101 | 106 | 100 | 104 | 99 | 102 | 99 | 98 | 97 |
| 3.00 | 124 | 106 | 120 | 105 | 116 | 104 | 113 | 102 | 121 | 105 | 117 | 104 | 114 | 103 | 111 | 102 | 114 | 104 | 111 | 102 | 109 | 102 | 107 | 101 | 108 | 102 | 106 | 101 | 105 | 100 | 103 | 99 | 99 | 98 |
| 4.00 | 126 | 107 | 123 | 106 | 120 | 105 | 117 | 104 | 122 | 106 | 119 | 105 | 117 | 104 | 114 | 103 | 115 | 104 | 113 | 103 | 111 | 103 | 109 | 102 | 109 | 102 | 107 | 102 | 106 | 101 | 105 | 100 | 100 | 98 |
| 5.00 | 127 | 108 | 124 | 107 | 122 | 106 | 119 | 105 | 123 | 107 | 121 | 106 | 118 | 105 | 116 | 104 | 116 | 105 | 114 | 104 | 112 | 103 | 111 | 103 | 109 | 103 | 108 | 102 | 107 | 102 | 106 | 101 | 100 | 99 |
| 7.00 | 129 | 108 | 126 | 107 | 124 | 107 | 122 | 106 | 124 | 107 | 122 | 106 | 121 | 106 | 119 | 105 | 117 | 105 | 115 | 105 | 114 | 104 | 113 | 104 | 110 | 103 | 109 | 103 | 108 | 102 | 107 | 102 | 101 | 99 |
| 10.00 | 130 | 109 | 128 | 108 | 127 | 108 | 125 | 107 | 125 | 108 | 124 | 107 | 123 | 107 | 121 | 106 | 117 | 105 | 116 | 105 | 115 | 105 | 114 | 104 | 110 | 103 | 109 | 103 | 109 | 103 | 108 | 102 | 102 | 100 |

JIS C 8030:2014

三菱電機照明株式会社