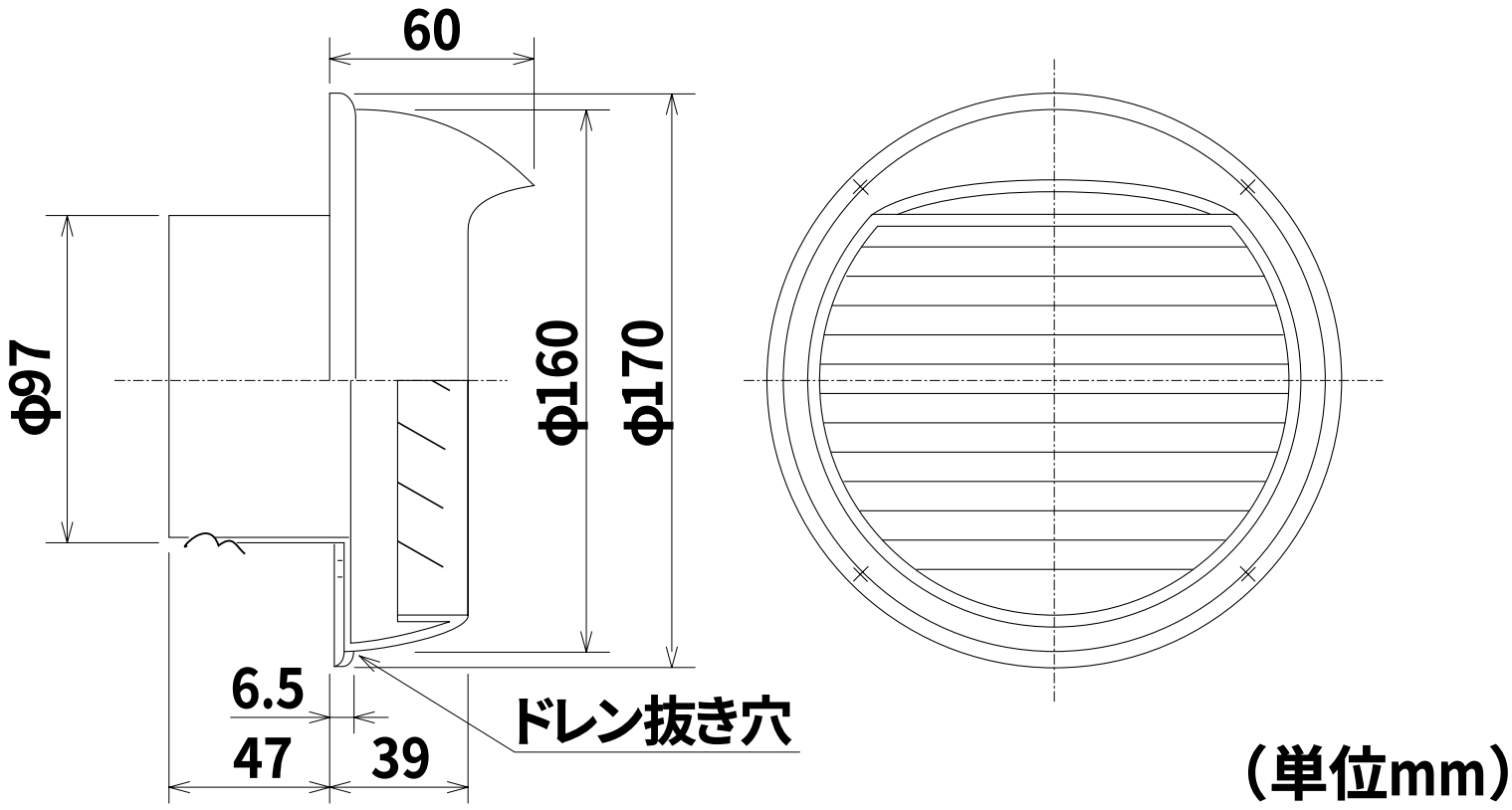P-13BDP